Guide for Working on Projects Under OSHPD Jurisdiction – Tips from the Experts

Office of Statewide Health Planning and Development, Facilities Development Division

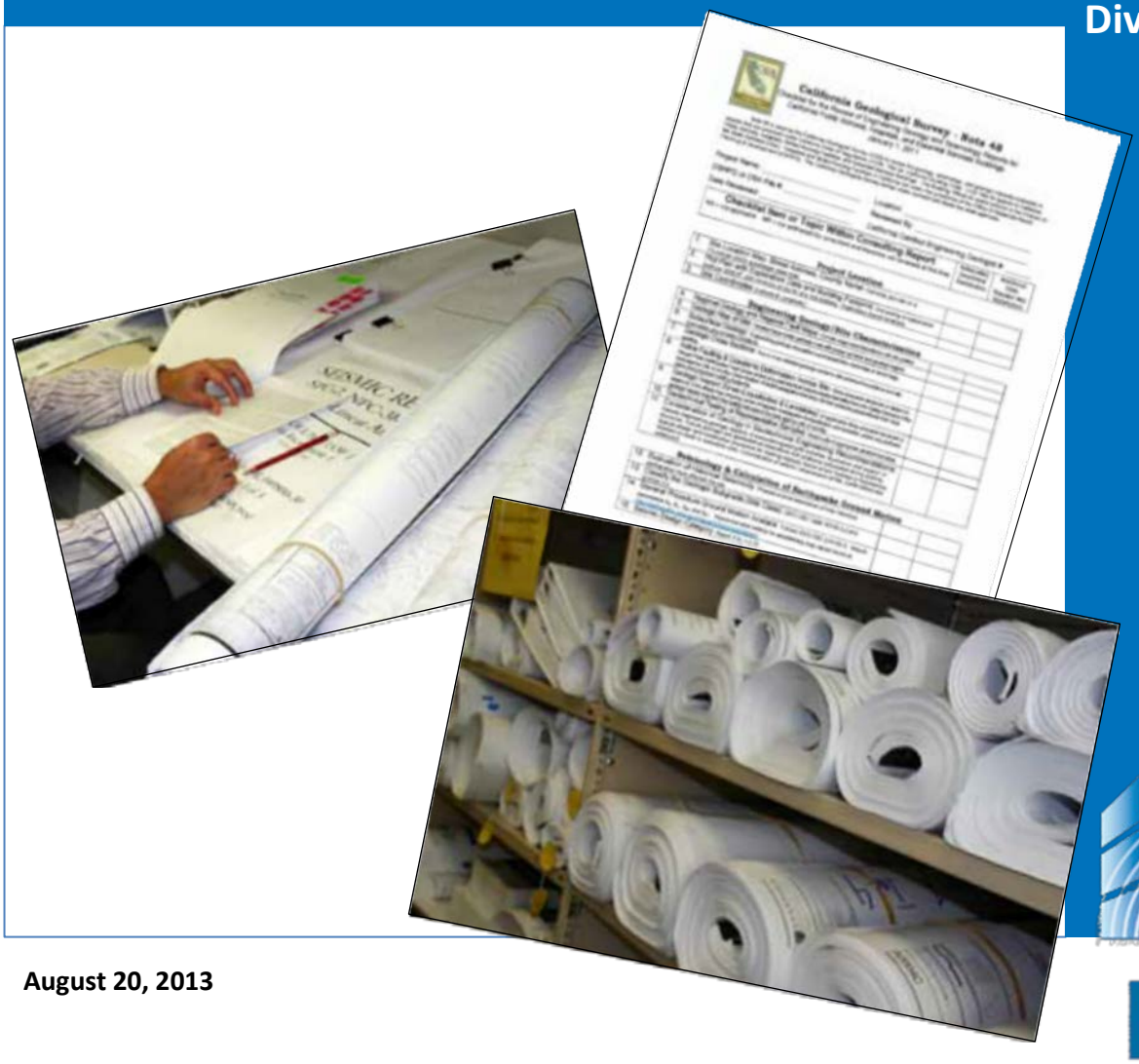

August 20, 2013

PREAMBLE

In March 2006 the California Healthcare Foundation published the "Best Practices for Project Management, Design, and Construction of Buildings Under OSHPD Jurisdiction." The "Best Practices Manual" was developed in conjunction with the California Hospital Association (CHA), the California Society for Healthcare Engineers (CSHE), the Office of Statewide Health Planning and Development (OSHPD), and a task force comprised of stakeholders from the hospital design, inspection, and construction industries. It quickly became the "gold standard" for hospital design, inspection, and construction and served as a model for avoiding costly delays sometimes associated with large, complex projects.

The hospital industry in California is indebted to the California Healthcare Foundation for undertaking this monumental task. With the Foundation's consent, the Hospital Building Safety Board (HBSB), comprised of experts from all aspects of the hospital construction industry, in conjunction with the OSHPD, updated the Best Practices Manual and reissued it as the "Guide for Working on Projects Under OSHPD Jurisdiction – Tips From the Experts."

This Guide reflects many years of experience by all stakeholders involved in hospital construction, including owners, designers, inspectors, contractors, etc. and was vetted through a number of public meetings. It should be used as a general guide and is not intended to replace, supersede, or alter the requirements of the California Building Standards Code or any other enforceable regulations, codes, or standards for hospital construction.

This Guide reflects the enforceable building codes and regulations at the time of its publication and may not reflect requirements in subsequent editions. Therefore, it is intended that this Guide be a "living document" which is updated with each triennial building code cycle. Substantive changes in hospital construction project delivery, plan review, and or construction methods may also necessitate an update of the Guide.

I wish to thank the HBSB, all OSHPD staff who participated, and the public who attended the meetings and provided valuable input for the many hours expended on the Guide's development. Use of this Guide is discretionary; however, I think that you will find its use to be a good investment toward improving the quality of hospital construction projects and the working relationship between all parties involved in the process.

Paul A. Coleman, Architect
Deputy Director

Office of Statewide Health Planning and Development
Facilities Development Division
400 R Street, Suite 200
Sacramento, CA 95811

Table of Contents

Section 1 - Introduction to the Office of Statewide Health Planning and Development, Facilities Development Division 2

1.0 Introduction 2

1.1 Authority of OSHPD FDD 3

1.2 OSHPD FDD Structure 4

a. Division Support Section 5

b. Building Safety Section 5

1) Architectural and Engineering Unit 5

2) Field Compliance Unit 5

3) Rapid Review Unit 5

4) Building Standards Unit 5

5) Fire Prevention Unit 6

6) Inspection Services Unit 6

c. Structural Services Section 6

1) Seismic Compliance Unit 6

2) Structural Support Unit 6

1.3 Hospital Building Safety Board 6

1.4 Enforcement 7

1.5 OSHPD Plan Review and Permitting Processes 7

1.6 OSHPD Electronic Services Portal 8

Section 2 - Geologic Hazards Investigation Guidelines 10

2.0 Introduction 10

2.1 Overview of the Process 10

a. Site Investigation 11

b. Unusual Projects 11

c. Hazard Mitigation 11

2.2 Geologic Hazards Report 11

2.3 Approval of Seismic and Geologic Hazard Reports 12

Section 3 - Plan Design and Review Guidelines 14

3.0 Introduction 14
3.1 Role of the Registered Design Professional 14
a. Working with the Authority Having Jurisdiction 15
b. The California Environmental Quality Act 16
3.2 General Guidelines for the Project Drawings 17
a. Quality in Documentation 17
b. General Organization of the Project Drawings 18
c. Recommended Graphics and Symbols 19
d. General Nomenclature 20
3.3 Project Title Sheet 21
a. Purpose 21
b. Organization and Approach 22
1) Title Block or Strip 23
2) Project Team 24
3) Project Information 24
4) Applicable Codes and Regulations 24
5) Fire-Resistive Schedule 25
6) Deferred Submittals 25
c. Other Information 26
d. Existing Special Conditions 26
3.4 Fire and Life Safety Drawings 27
a. Purpose 27
b. Organization and Approach 28
c. Drawing Content 29
1) Provisions of CBC Chapter 3: Use and Occupancy Classification 30
2) Provisions of CBC Chapter 4: Special Detailed Requirements Based on Use and Occupancy 30
3) Provisions of CBC Chapter 5: General Building Heights and Areas 31
4) Provisions of CBC Chapter 6: Types of Construction 31
5) Provisions of CBC Chapter 7: Fire and Smoke Protection Features 31

6) Provisions of CBC Chapter 8: Interior Finishes 31
7) Provisions of CBC Chapter 9: Fire Protection Systems 32
8) Provisions of CBC Chapter 10: Means of Egress 32
9) Provisions of California Fire Code and NFPA Standards 33
d. Working with the Local Fire Authority 33
1) Local Fire Authority Fire Sprinkler and Fire Hydrant Requirements 33
2) Local Fire and Water Authority Requirements 34
3) Local Fire Authority Approval 34
e. Existing Special Conditions 35
3.5 Accessibility Compliance Documentation 35
a. Purpose 35
b. Organization and Approach 35
c. Drawing Content 35
1) Site Plans 36
2) Floor Plans 36
3) Enlarged Drawings 37
d. Existing Conditions 38
3.6 Door Schedule 39
a. Purpose 39
b. Organization and Approach 39
c. Drawing Content 39
d. Existing or Special Conditions 40
3.7 Equipment Anchorage 41
a. Purpose 41
b. Organization and Approach 43
c. Drawing Content 44
3.8 Architectural Details 45
a. Purpose 45
b. Organization and Approach 46
c. Drawing Content 47

3.9 Guidelines for Structural Drawings 49
a. General Guidelines 49
b. Working with OSHPD Structural 50
c. Organization and Approach 51
d. Drawing Contents 51
3.10 Guidelines for Mechanical Drawings 52
a. Purpose 52
b. Content 52
1) Information Plans 53
2) Site Plans 53
3) Floor Plans 53
4) Enlarged Drawings 54
c. Organization and Approach 54
d. Local Requirements 54
3.11 Guidelines for Plumbing Drawings 54
a. Purpose 54
b. Content 55
1) Information Plans 55
2) Site Plans 55
3) Floor Plans 55
4) Enlarged Drawings 56
c. Organization and Approach 56
d. Local Requirements (see Mech.) 56
3.12 Guidelines for Electrical Drawings 56
a. Purpose 56
b. Content 56
1) Site Plans 58
2) Floor Plans 58
3) Enlarged Drawings 58
c. Organization and Approach 58

d. Drawing Content 58
e. Existing Conditions 59
f. Local Requirements (see Mech.) 59
Appendix 3-A Recommended Graphics and Symbols for Rated Walls 61
General Rated Wall Graphics 61
Special Rated Wall Designations 61
Section 4 – Inspector of Record Guidelines 64
4.0 Introduction 64
4.1 Certified Hospital Inspector Code of Ethics 64
4.2 Knowledge 66
4.3 Principal Duties 66
a. Scope 66
b. Code Required Duties: 7-145. Continuous inspection of the work. 66
4.4 Documentation and Processing “Materially Alter” Items 68
4.5 Additional Duties 69
a. Chronological Record 69
b. Plans and Specifications 70
c. Files, Records, and Reports 71
4.6 Inspections and Types of Inspections Provided by the IOR 71
a. Inspection Requests 72
b. Starting the Inspection Request Program 72
c. Rejecting Inspection Requests 72
d. Logging Inspection Requests 73
4.7 Other Project-Related Duties 73
4.8 Checklists 74
4.9 Coordination Concerns 74
4.10 Preconstruction Meetings 75
a. Preparation for the Preconstruction Meeting 75
b. During the Meeting 76
4.11 OSHPD Interaction 77

4.12 Concluding Remarks 78
Section 5 - Testing, Inspection and Observation Guidelines 80
5.0 Introduction 80
5.1 Purpose 80
5.2 Maintenance and Administration 80
5.3 Format 81
5.4 Instruments 81
5.5 Contract Drawings 81
5.6 Instructions 82
5.7 Responsible Personnel 84
a. Owner 85
b. OSHPD Staff 85
c. Design Professional of Record 85
d. Inspector of Record 85
e. Contractors 86
f. Special Inspectors 86
g. Design Professional 86
5.8 Tests 86
5.9 Inspections 86
5.10 Milestones and Intervals 87
5.11 Samples 87
5.12 TIO Modifications 87
5.13 Approval 87
5.14 Conclusion 87
Section 6 - Guidelines for Working with OSHPD Facilities Development Division Field Staff 89
6.0 Introduction 89
6.1 Overview of the Process 89
6.2 Challenges and Recommendations 90
a. Contractor 90
b. Design Team 91

c. Owner 92
d. Summary 93
Section 7 - Guidelines for Hospitals in Working with OSHPD 95
7.0 Introduction 95
7.1 Basic OSHPD Processes 96
7.2 Guidelines 96
7.3 Project Selection and Identification Phase 96
7.4 Project Planning Phase 98
a. Land Use Approvals and CEQA 100
b. Other Permitting Entities 101
c. California Department of Public Health (CDPH) 101
d. Design-Bid-Build 101
e. Design-Build 102
f. Integrated Project Delivery 102
7.5 Design Phase 105
a. Deferred Submittals - Clinical Equipment 108
b. Deferred Submittals -Low Voltage (Information Technologies/Information Services) Design 109
7.6 Permit Phase 110
a. Comment and Process Review 112
Step 1: Review with the Comment Originator 112
Step 2: Appeal to the Supervisor 113
Step 3: Appeal to the Division Chief 113
b. Hospital Building Safety Board 113
c. Considerations for Appeals 113
7.7 Construction Phase 114
7.8 Close-Out Phase 115
Section 8 – Glossary: Acronyms and Definitions 118

Section 1

Introduction to the Office of Statewide Health Planning and Development, Facilities Development Division

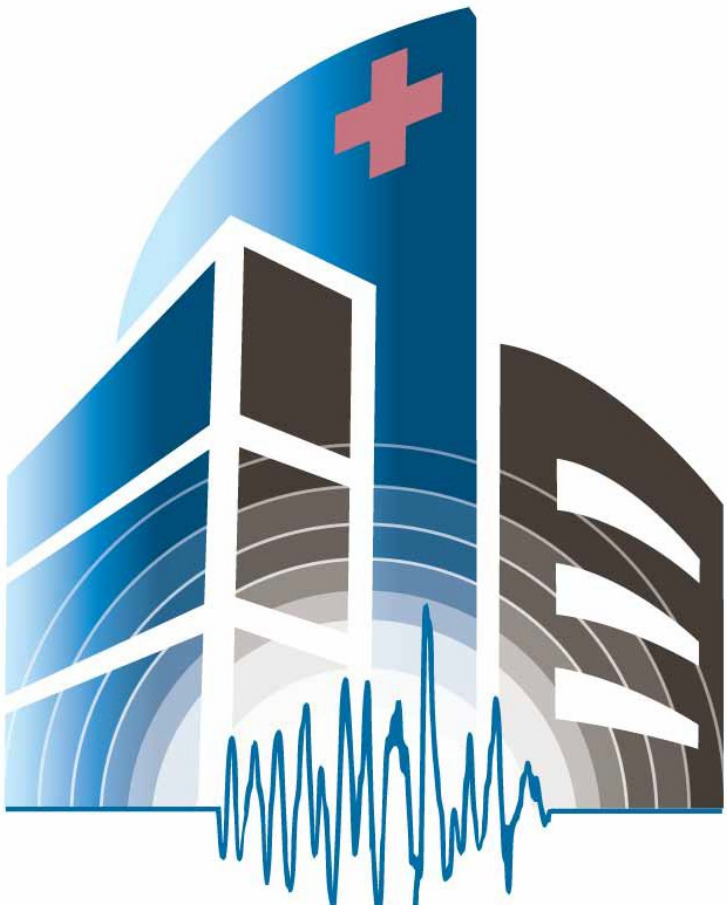

Section 1 - Introduction to the Office of Statewide Health Planning and Development, Facilities Development Division

1.0 Introduction

The Sylmar earthquake of 1971 caused the collapse of several hospital buildings, endangering the lives of patients in those hospitals at the time and rendering the hospitals incapable of providing emergency care to people injured in the earthquake. As a result, the California state legislature passed the Alfred E. Alquist Hospital Facilities Seismic Safety Act (HSSA) and, since 1973, all hospital construction has been governed by the provisions of that legislation. The state preempted local building departments to ensure statewide uniformity in health facility construction standards. The standards are intended to ensure that vulnerable patients are safe in an earthquake and that the facilities remain functional after such a disaster, thereby being capable of providing care for injured persons in the community.

Pursuant to the HSSA, the Office of Statewide Health Planning and Development (OSHPD) is responsible for overseeing all aspects of the design and construction of general acute care hospital, psychiatric hospital, and skilled nursing home and intermediate care facility construction in California. Its responsibilities include establishing building standards that govern construction of these types of facilities; reviewing the plans and specifications for new construction, alteration, renovation, or additions to health facilities; and observing construction in progress to ensure compliance with the approved plans and specifications.

In addition, OSHPD is responsible for establishing the building standards for freestanding licensed clinics, but plan review and construction observation functions are the responsibility of local building departments. For two types of clinics—dialysis clinics and surgical clinics—local building departments may defer these functions to OSHPD or the facility owner may request that OSHPD provide plan review and construction oversight services.

OSHPD's responsibilities under the HSSA are carried out by its Facilities Development Division (FDD). The FDD design, construction, and quality assurance oversight process entails the following: construction drawings and specifications are submitted to the FDD and reviewed for code compliance by division architects; structural, electrical, and mechanical engineers; and fire and life safety personnel assigned to the specific regional group defined by the geographical location of the project. Upon approval of the project plans, specifications and Test, Inspection, and Observation (TIO) Plan, a building permit is issued and construction begins. The facility owner hires one or more FDD-certified Inspectors of Record (IOR), who work under the direction of the registered design professional throughout the construction phase and reports to FDD field personnel and the owners on the progress of the construction. The IOR notifies the registered design professional of discrepancies between approved design documentation and constructed conditions and requests direction by the registered design professional for proper resolution.

Resolution that results in a material change to the project requires a submittal of amended construction documents by the registered design professional. Otherwise, the FDD field personnel confirm the acceptability of the resolution by review of a field log maintained by the IOR.

FDD field personnel make periodic visits to the construction site to ensure that the seismic, fire and life safety, and other requirements of the building code are being met. Once construction is completed and required close-out documentation is submitted to OSHPD, FDD issues a certificate of occupancy or a construction final, as applicable.

FDD serves as a "one-stop shop" for all aspects of health facility construction. All architectural, geotechnical, structural, mechanical, electrical, and fire and life safety considerations for inpatient healthcare facility physical plants are handled by FDD. The California Department of Public Health Licensing and Certification Division ensure that the organization and operation of health facilities meet specified standards (e.g., staffing ratios and qualifications, quality of care protocols, and emergency action plans).

FDD staff members also play an important role in the aftermath of an earthquake or other disaster, being dispatched to assess the extent of damage to health facilities in the affected communities. Based on these assessments, the facilities are cleared to continue providing care without interruption or, if the damage is severe enough, the facility may be closed. The results of these assessments are communicated to state and local emergency response personnel, so that they can route patients to safe facilities. FDD staff members also review and approve on-site construction required for mitigation of earthquake damage to the facility.

1.1 Authority of OSHPD FDD

OSHPD FDD oversees certain aspects of the integrity and safety of the built environment for:

- New building construction
- All aspects of existing facility remodels, additions and/or modifications that affect architectural, electrical, mechanical, and structural systems and work that affects fire and life safety conditions, including replacement of equipment
- Compliance with the conditions and deadlines established by California Hospital Seismic Retrofit Program (Chapter 740, Statutes of 1994, and referred to as Senate Bill 1953)

The basis for OSHPD FDD's authority is established by statute in the California HSSA. The regulations enforced by OSHPD FDD are contained in the California Building Standards Code (CBSC), Title 24, California Code of Regulations.

- Part 1 of Title 24 is the California Administrative Code (CAC) and defines the administrative procedures necessary for the design, construction and inspection of

facilities development, along with those for the seismic retrofit requirements of the HSSA.

- Part 2 of Title 24 is the California Building Code (CBC), which establishes all of the technical requirements of the built environment.
- Part 3 of Title 24 is the California Electrical Code, which establishes all of the technical requirements of the built environment.
- Part 4 of Title 24 is the California Mechanical Code, which establishes all of the technical requirements of the built environment.
- Part 5 of title 24 is the California Plumbing Code, which establishes all of the technical requirements of the built environment.
- Part 9 of title 24 is the California Fire Code, which establishes all of the technical requirements of the built environment.

The responsibility for adopting the CBSC rests with the California Building Standards Commission. OSHPD is one of a number of state agencies that proposes amendments to the building code.

The scope of authority for OSHPD FDD extends to many types of healthcare buildings. It does not normally include medical office buildings or other non-hospital buildings on a campus. Other elements of the medical campus such as the right to site an acute care facility, grounds and landscaping, parking lot construction, and the general aesthetics of the site remain in the domain of the local government. Site development may also come under the requirements of the California Environmental Quality Act (CEQA). Local health departments govern issues related to operation of food preparation areas in acute care buildings. Hospitals must recognize and account for local jurisdiction entitlements, design review, and site engineering approvals, which are completed outside of OSHPD jurisdiction but are required to be completed prior to issuance of an OSHPD permit. OSHPD requires proof of local jurisdiction approvals.

Unless notified by a Local Jurisdiction in writing of requirements which are more stringent than the California Building Standards Code, OSHPD FDD does not enforce regulations that are not adopted by the state of California. Hospital owners must ensure that the hospital's design team is responsible for compliance with the Americans with Disabilities Act (ADA) or Medicare Conditions of Participation requirements when appropriate.

1.2 OSHPD FDD Structure

FDD personnel are divided into three major sections: Division Support Section, Building Safety Section, and Structural Services Section (there are multiple work units within each section), plus some additional units.

a. Division Support Section

The Division Support Section manages all major administrative functions of FDD. It is comprised of two distinct units: the Contracts and Fiscal Unit and the Business and Administrative Support Unit.

b. Building Safety Section

The Building Safety Section manages technical considerations relative to the regulations, design, inspection and construction of new buildings and/or modifications to existing buildings. Within the Building and Safety Section there are six regions, based on geographical assignments and four specialized units. Each geographic region has both an Architectural and Engineering Unit and a Field Compliance Unit to provide plan review and field observation services.

1) Architectural and Engineering Unit

The Architectural and Engineering Unit is responsible for ensuring that all plans for work within a hospital building are properly prepared by California licensed design professionals, and that the plans conform to the requirements of the California Code of Regulations (CCR). Each regional

Architectural and Engineering Unit is managed by a regional supervisor who oversees the work of a staff of plan reviewers comprised of licensed architects and electrical, mechanical, and structural engineers, as well as fire and life safety officers.

2) Field Compliance Unit

The Field Compliance Unit oversees the construction inspections of facilities within the geographic boundary of their respective region. This oversight enhances the construction quality of hospital facilities and fosters better lines of communication between OSHPD and the various architects, geologists, engineers, inspectors and contractors involved in hospital construction. A Regional Compliance Officer (RCO) supervises a staff comprised of compliance officers, district structural engineers, and fire and life safety officers.

Details on working with OSHPD field staff can be found in Section 6 of this Guide.

3) Rapid Review Unit

The Rapid Review Unit is responsible for the plan review of projects with specific size, scope and complexity limitations. It was established to free up plan review resources within each region and expedite plan review processing for smaller projects.

4) Building Standards Unit

The Building Standards Unit is responsible for the ongoing development of modifications to the CBSC that improve the safety and quality of the design, inspection, and construction processes in California. The group develops tools used for interpreting code called Code Application

Notices (CANs) and Policy Intent Notices (PINs) that are used by designers and hospital personnel to better understand the affected regulations.

5) Fire Prevention Unit

The Fire Prevention Unit (FPU) is responsible for the ongoing development, enforcement and application of code provisions that improve conditions for fire and life safety in both new and existing healthcare facilities. The FPU also has a Fire Life safety Academy for the recruitment and training of Fire Life Safety Officers.

6) Inspection Services Unit

The Inspection Services Unit is charged with the review of all matters relative to the quality assurance and quality control of building projects. Standards of care and practices by project inspection personnel and test laboratories are established and monitored by the unit. Practices associated with the onsite management of the Test, Inspection, and Observation (TIO) Programs are evaluated and modified as needed to improve the statewide application of hospital building construction.

c. Structural Services Section

The Structural Services Section is charged with distinct responsibilities associated with structural and seismic considerations of buildings and building system components. It is comprised of the Seismic Compliance Unit and the Structural Support Unit.

1) Seismic Compliance Unit

The Seismic Compliance Unit is responsible for the management of ongoing compliance plans and progress associated with the Hospital Seismic Retrofit Program. Senate Bill 1953 (SB 1953) (Chapter 740, Statutes of 1994) became effective on January 1, 1995. The bill was an amendment to and furtherance of the Alfred E. Alquist Hospital Facilities Seismic Safety Act of 1983 (Alquist Act). SB 1953 (Chapter 740, 1994) is now chaptered into statute in Sections 130000 through 130070 of the Alfred E. Alquist Hospital Facilities Seismic Safety Act and is part of the California Health and Safety Code.

2) Structural Support Unit

The Structural Support Unit is responsible for the Structural Regulations, Quality Assurance, Plan Review Contract management, review of Geotechnical/Geohazards Reports and the Pre-Approval programs for equipment special seismic certification, equipment anchorage and restraint, and standard details.

1.3 Hospital Building Safety Board

The Hospital Building Safety Board (HBSB) is appointed by the Director of OSHPD. The HBSB advises the Director on the implementation of the HSSA and acts as a board of appeals in all

matters of the administration and enforcement of building standards relating to the design, construction, alteration, and seismic safety of hospital building projects submitted to the FDD.

Tip: *The Office also has an informal appeals process known as Comment and Process Review (CPR) which may be used to promptly resolve issues concerning plan review and construction observation comments or processes in an informal manner.*

1.4 Enforcement

OSHPD FDD is responsible for determining whether a hospital is in compliance with the requirements of Titles 24 of the California Code of Regulations (CCR). Operating compliant facilities is a basic requirement of Title 22 of the CCR. Facility compliance is also a consideration for Centers for Medicare and Medicaid (CMS) certification and for accreditation by The Joint Commission (TJC).

If a hospital is found in violation of Title 24, OSHPD may take either formal or informal action. Informal action takes the form of instructions to correct the noncompliant condition. Formal actions are more severe and can have significant impacts on a hospital construction project. Examples include:

- A notice to Stop Work
- A noncompliance letter for work performed without a permit (commonly referred to as "bootlegged" work or unauthorized construction)

Even if Licensing & Certification chooses not to take action as a result of a noncompliance condition cited by OSHPD FDD, there still remains heightened risk to the hospital from action by CMS that could materially affect the hospital's Medicare payment or TJC accreditation.

Noncompliance matters should be taken very seriously.

1.5 OSHPD Plan Review and Permitting Processes

OSHPD has several processes available for plan review, approval, and permitting. The type, size, and complexity of projects will often be the guiding factors used to determine which process is most suitable. The processes are: Standard Review, Managed Project Review, Phased Plan Review, Collaborative Review, Expedited Review, Critical Path Expedited Review, Over-the-Counter Review, Rapid Review, Field Review, and SB 1838 Exempt. For more information about the processes available for plan review, approval and permitting, please see OSHPD webpage:

http://www.oshpd.ca.gov/FDD/plan_review/index.html

Tip: *The designer may contact the Regional Supervisor prior to submittal of an application to the Office to assist them in determining the process which best fits their project's needs.*

1.6 OSHPD Electronic Services Portal

In September 2011 FDD activated the Electronic Services Portal (e-SP), a comprehensive information management system based on the Accela Automation software system. e-SP replaces the FDD Logbook system which had been in use for more than a decade. e-SP implements a number of workflow controls which guide the user through the FDD business process, limiting the choices of the user to those that are compatible with FDD policies. The program allows specific users to perform the following tasks: project intake, triage, triage results, plan review, plan approval, application for building permit, construction start, field operations, project closure, and archive documents.

Section 2

Geologic Hazards Investigation Guidelines

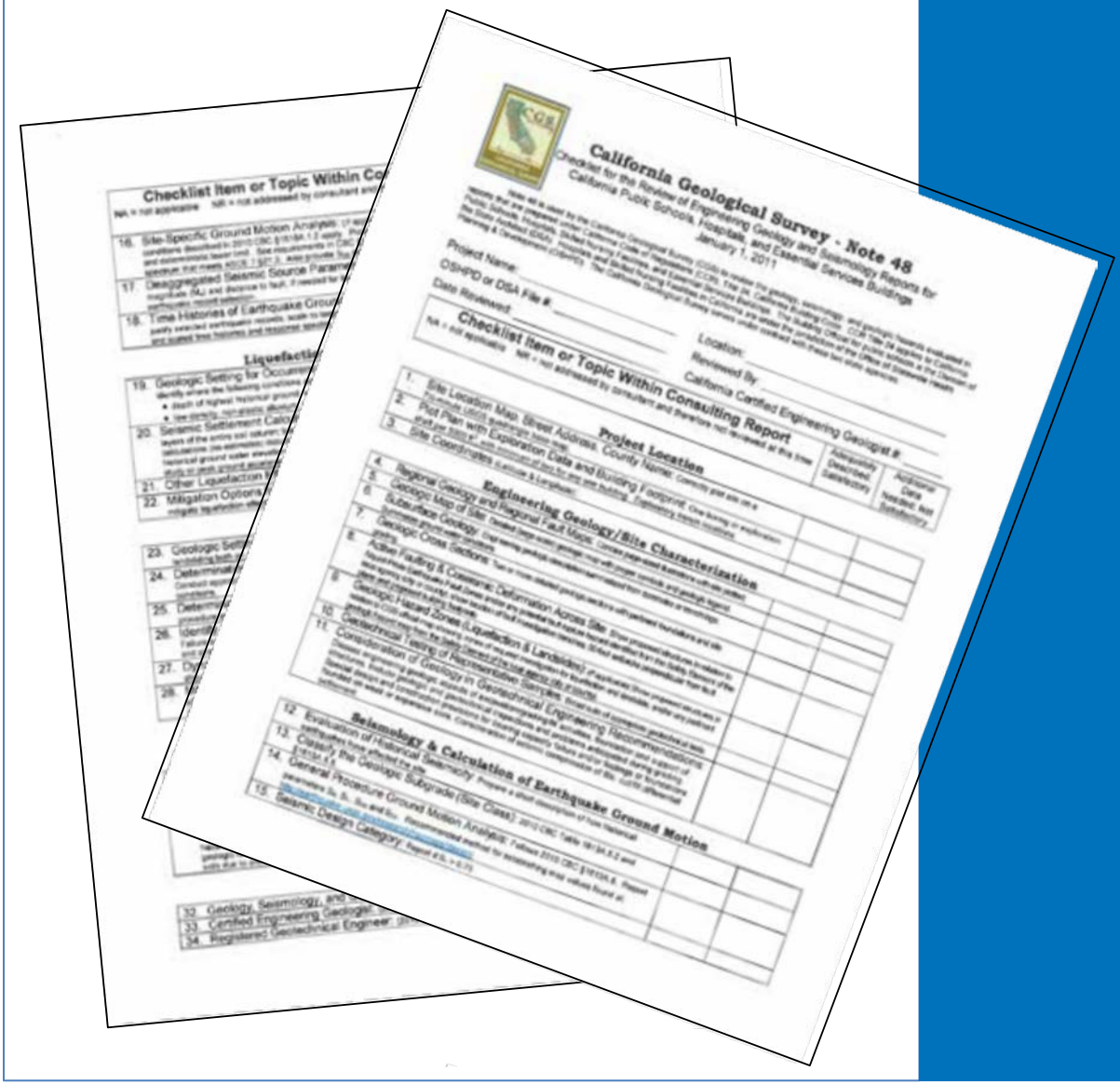

Section 2 - Geologic Hazards Investigation Guidelines

2.0 Introduction

Identification of seismic and geologic hazards present on the site of a proposed hospital construction project occurs before the design of a building is begun. Seismic and geologic hazards affecting building construction and performance may include (but not be limited to) the following:

- Potential earthquake shaking
- Surface fault rupture
- Earthquake-induced landslides
- Liquefaction
- Slope instability
- Weak and/or sensitive soils
- Shallow groundwater
- Flooding
- Tsunami
- Hazardous minerals

It is important to note these hazards may occur in combination.

2.1 Overview of the Process

Among the documents included in hospital construction permit applications is a geologic hazards report. Chapters 16 and 16A (Structural Design), 18 & 18A (Soils and Foundations) and 34 and 34A (Existing Structures) of Part 2, Title 24, California Code of Regulations (CCR),

California Building Code (CBC), address the required elements of seismic and geologic hazards reports to be prepared and signed by the registered engineering geologist of record (GOR) and registered geotechnical engineer of record (GEOR).

Applications for new projects are submitted to OSHPD, which forwards the seismic and geologic hazards report component to the California Geological Survey (CGS) for review and comment when appropriate. CGS geologists and seismologists provide technical information and advice to OSHPD regarding geologic hazards with the potential to adversely affect hospitals. Using CGS Note 48, *Checklist for the Review of Engineering Geology and Seismology Reports for California Public Schools, Hospitals, and Essential Services Buildings*, CGS staff prepares memoranda documenting their geologic reviews of hazard reports prepared by the hospital's consultants. Of primary concern is compliance with the current building code. These review memoranda are submitted to OSHPD for incorporation into their project decision-making process.

a. Site Investigation

A site investigation is required to document the geologic conditions at the site. Projects involving new building construction, structural retrofit work, etc. often can't be approved without adequate and/or appropriate geologic data. Prior to collecting data the GOR will conduct reconnaissance, such as review of historical air photos, geologic maps and data collected during previous work at the site, to understand what potential geologic issues may exist at the site and plan an appropriate exploration strategy. Exploration methods will vary depending upon the local geologic conditions and hazards being investigated, but at a minimum, will include drilling of subsurface borings. Chapter 18A of the CBC requires one boring per 5,000 square-feet of building (plan area) and a minimum of two borings per building. Soil samples are collected from various soil layers encountered in the boring for laboratory testing to determine soil properties. Data and reports from previous geologic investigations at the site may be used to supplement site investigations of future projects so long as the data are located in close proximity, and are relevant to the project to be constructed.

b. Unusual Projects

Sites within Alquist-Priolo Earthquake Fault Zones (or local equivalents) should perform fault investigations well in advance of building design. CGS should have the opportunity to review fault trenches in the field. Sites within regulatory earthquake hazard zones (or local equivalents), in addition to standard subsurface borings, may also require supplemental data collected using methods such as down-hole logging and assessment of seismic wave velocity.

c. Hazard Mitigation

Once the site investigation is completed and all geologic hazards are identified and characterized, as necessary and appropriate, the GEOR and GOR will provide mitigation recommendations. Geologic hazard mitigation typically includes removal of weak soils, ground improvement, foundation recommendations, or combinations thereof. Avoidance is the only acceptable mitigation for fault rupture hazard. Where active faults are known to cross a project site, a 50-foot minimum setback is required.

2.2 Geologic Hazards Report

After completion of site investigation activities and laboratory testing, the GOR and GEOR will compile a report documenting all site investigation activities and the results of laboratory testing, a summary of all important findings, and appropriate recommendations. A complete report may include (but not be limited to) the following:

- A summary of important findings
- A site plan showing the location of site investigation activities with respect to the footprint of each building
- Regional and site-specific geologic maps

- Highest historical groundwater information
- Cross sections
- Ground motion analysis
- Copies of all laboratory test results
- Copies of all calculations (including all input parameters)
- Mitigation recommendations

2.3 Approval of Seismic and Geologic Hazard Reports

Upon receipt of reports transmitted from OSHPD, CGS reviewers will assess the document(s) for completeness with respect to CGS Note 48. After reviewing the documents, CGS will submit a letter to OSHPD either noting the geologic and seismic hazards are adequately addressed or summarizing inadequacies and requesting additional information. When additional information is requested, CGS will review the supplemental data and analysis and submit a letter to OSHPD stating whether all of the geologic and seismic hazards are adequately addressed. In some cases, site ground improvement mitigation methods will result in a conditional approval of the project. Full approval of the project is granted after the GOR and GEOR complete the recommended ground improvement activities and provide a revised hazard report documenting the improved site conditions. For seismic upgrades or additions to existing structures, certain projects are exempt from geologic hazard review by the CBC. Upgrades and additions subject to geologic hazards review by CGS will be subject to all of the requirements outlined in CGS Note 48.

Tip: *The Geologic Hazards Report should be submitted as early in the process as possible so that it does not become the critical path for project plan approval*

Section 3

Plan Design and Review Guidelines

Section 3 - Plan Design and Review Guidelines

3.0 Introduction

Hospitals by their nature are large, complex buildings and hence so are the construction projects to build or renovate them. Before any construction can commence, the Office of Statewide Health Planning and Development (OSHPD) must review and approve the various construction documents.

Renovation projects under $500,000 in construction cost comprise the majority of project plans reviewed by OSHPD. Often construction documents prepared for these projects are produced by architects and engineers who may have limited experience in healthcare design. Submitting consistently formatted construction documents, applying quality review checklists, and following practices that are proven to be effective, such as those outlined in this Guide, and other national healthcare related organizations (eg. Association for Professionals in Infection Control and Epidemiology, Inc. (Apic) Association for Operating Room Nurses (AORN)). All have the potential to improve and accelerate plan review and construction activities. Clearly prepared construction documents will also facilitate the contractor's ability to efficiently construct projects. The design team should meet with OSHPD staff as needed during predesign and design phases to review and confirm design issues.

Although OSHPD cannot mandate the organization and style of construction documents, the guidelines outlined in this chapter should provide a consistent approach for preparation of construction documents that will facilitate the plan check review process. These guidelines represent minimum standards for recommended practices; licensed design professionals and hospital representatives may want to go above and beyond the guidelines presented here.

Keep in mind that the "Guidelines and Tips" outlined in this chapter are only general guidelines meant to serve as a reference tool. They are to be used in conjunction with the contract documents and do not, in any way, supersede or alter specific requirements of the project contract, drawings, specifications, and enforceable codes.

3.1 Role of the Registered Design Professional

The Health and Safety Code and the California Administrative Code state that "all construction documents or reports…shall be prepared under an architect or engineer in responsible charge." As much as the California Architects' Practice Act mandates architectural services to be provided under the "responsible control" of the licensed Architect exercising due "standard of care," the preparation of documents for complex buildings like hospitals, mandates a high level of responsibility over the content and design captured in the construction documents.

For large hospital projects, much of the actual work may in fact be delegated to other design professionals. Regardless of how the work is proportioned out, administration of the work remains the responsibility of the Registered Design Professional in responsible charge for the project. Although there may be some specific projects that are exclusive of architectural or structural work, which may be completed by other California registered engineers, it is important that the Architect understand when this applies under OSHPD regulations. Please see Section 7-115 of the California Administrative Code (CAC) for further information.

Except as provided for in CAC § 7-115, OSHPD submittals, including all drawings, specifications and other construction documents are required to be stamped and signed by a California Registered Design Professional. The CAC states that "all construction documents shall be signed and stamped prior to issuance of a building permit."

Tip: *Although some Professionals are only required to sign the final construction documents, the design Professional should stamp and sign all formal submittals to OSHPD to demonstrate he/she has exercised responsible charge as required.*

Tip: *The design team should meet with the appropriate OSHPD staff as needed during the predesign and design phases to reduce rework. Refer to C.A.N 2-102.6.*

a. Working with the Authority Having Jurisdiction

The Registered Design Professional is responsible for ensuring that the project conforms to the local jurisdiction requirements as well as those enforced by OSHPD. Many jurisdictions have documents that supplement the requirements of the CBSC, such as General Plans, Zoning and Planning Standards, etc., and in many of these cases the requirements are more restrictive and/or will significantly impact the design of the project. It is the Registered Design Professional's responsibility to be knowledgeable of the unique requirements of the local jurisdiction. OSHPD will not coordinate the requirements of the local jurisdiction for the project.

OSHPD relies on the Registered Design Professional to coordinate the local requirements with the project, in particular, any zoning and/or unique building code requirements imposed by a local jurisdiction need to be coordinated with the local agency. With a new building project especially, the site work will fall under the jurisdiction of the local agency. However, OSHPD will exercise its jurisdiction over building related site work, utilities, and systems which have a direct impact on code compliance for the hospital building, such as the site fire water line, as well as other jointly-reviewed features. Other site accessibility requirements will be under purview of the local jurisdiction. (See CAN 1-7-103)

In addition to the local jurisdiction and OSHPD, many other agencies approve or permit a hospital project. OSHPD is the permitting agency for the building. The California Department of Public Health licenses these facilities and enforces regulations that are in addition to OSHPD's.

For example, cafeterias require the local health department's approval; the use of a grease interceptor will require the review of the local water pollution agency; a storm water prevention plan might need to be filed; and an emergency generator or boiler might trigger an air quality review. This list is not comprehensive. The Registered Design Professional ultimately takes full responsibility for working with the appropriate agencies. To avoid delays, the Registered Design Professional must ensure that all appropriate approvals are obtained prior to a final permit being issued by OSHPD. Some of these entities are listed below:

- Local Jurisdiction Public Works Standard for Public Streets, Sidewalks and Curbs, Site Grading and Drainage, etc.
- Local Jurisdiction or Regional District for Sewer and Water Connections
- Local Jurisdiction Fire Department or Fire District Requirements for Fire Hydrant and Connection Locations
- Local Jurisdiction Planning Landscaping Requirements for Public Rights-of-Way
- County Health Department for Food Service Facilities Operations
- County Health Department for Radiation Protection Requirements
- California Air Quality Management Districts for Construction and Emergency Generator and Boiler Operations
- Local Jurisdiction for parking, site accessibility, and other site improvements
- Local school district for school fees

Tip: *Although not reviewed by OSHPD, the joint commission requires completion or an inspection control risk assessment (ICRA). During the design phase and prior to construction.*

b. The California Environmental Quality Act

The local jurisdiction is typically the lead agency in the California Environmental Quality Act (CEQA) process. The Registered Design Professional is responsible for ensuring that the project conforms to the requirements of CEQA. Minor renovations normally do not trigger CEQA compliance, but a major addition or remodel might. New buildings will require CEQA compliance, even if it is declared not to have an impact to the environment (a Negative Declaration). Specific requirements and regulations for CEQA can be found at http://ceres.ca.gov .

OSHPD relies on the Registered Design Professional to coordinate the local requirements with the project, in particular, any zoning and/or unique building code requirements imposed by a local jurisdiction need to be coordinated with the local agency. With a new building project especially, the site work will fall under the jurisdiction of the local agency.

However, OSHPD will exercise its jurisdiction over site work, utilities, and systems which have a direct impact on code compliance for the hospital building, such as the site fire water line as well as other jointly reviewed features.

Tip: *To* avoid *delays the registered design professional must ensure that all appropriate approvals are obtained prior to final permit being issued by OSHPD.*

3.2 General Guidelines for the Project Drawings

a. Quality in Documentation

Many architectural firms have documentation standards that are the mainstay of their practice, developed over many years of successful projects and improved upon as codes and technology have evolved. The guidelines offered in this section are not meant to suggest a better way of performing architectural documentation, but are intended to offer suggestions to individuals and firms that do not have the benefit of developing standards that many larger firms must do to ensure quality documents.

The "customers" for the architectural documents are large and varied—clients, engineers and consultants, contractors and vendors, as well as building officials. Although some are knowledgeable on how to read and use construction documents, there are still those who will be unfamiliar with specific graphic conventions, or common ways that are unique to an individual practice. The best method is to be sure the documents are as user friendly as possible.

For every project, the goal is to prepare a set of coordinated documents that appears to have been prepared by a single entity. It is important that all disciplines (and outside consultants) adhere to the same set of basic graphic standards that guide the preparation of the architectural documents.

Organizations like the AIA, CSI and National Institute of Building Sciences work jointly to create national standards for consistent documentation and data organization, to assist in communication and coordination across the design and construction industry. (See http://www.nationalcadstandard.org for more information.)

Another approach to creating better, more complete documents includes the development and use of checklists. These can be created specifically for a project, or developed for particular project types to help ensure consistency and completeness from project to project. OSHPD offers their own standard comments and reminder lists, developed by plan reviewers, for the design professionals to utilize when developing their documents, or as a quality- control review prior to submitting documents for review.

Tip: *Use the reminder lists on OSHPD's website to assure project code compliance and thus reduce overall time to project approval.*

Tip: *Use same the basic graphic standards for all disciplines to ensure the documents are coordinated.*

Once the documents for a project are deemed complete and coordinated by the Registered Design Professional, they are submitted to OSHPD along with an Application for New Project. The office plan review process starts with triage. Upon receipt, each submittal is logged in and reviewed by OSHPD Architects, Electrical, Mechanical, & Structural engineers, and Fire & Life Safety Officers, to determine if the submittal is complete. If deemed a complete submittal, OSHPD will process the documents in one of three ways:

- Normal construction projects requiring detailed reviews are "Taken In" and scheduled for review by each discipline, as needed, with a specific target date set for return
- Small projects with limited scope and dollar cost may be reviewed as "Expedited" by the Rapid Review Unit
- Very small work scope projects that can be quickly reviewed within an hour, or two hours for structural, may be processed as an "Over-the-Counter" reviews.

It is important to note that if the submittal is deemed incomplete, the Registered Design Professional will be notified.

It is highly encouraged by OSHPD that for projects with special concerns, conditions or complexity, the Registered Design Professional arrange for a pre-submittal meeting with the Office to consult about the Project's new work scope and the design approach. This meeting is mandatory for projects of $20 million or more, and of great benefit to the Design Team, as well as the Owner, when the project or the existing conditions are difficult to make compliant, or known code issues exist.

b. General Organization of the Project Drawings

Although every project may require different organization of drawings based on size and complexity, it is commonly found that construction documents have a similar organization, as follows:

Cover Sheet

Project Title Sheet and General Information

Architectural Drawings

- Plans for Fire and Life Safety Information
- Plans for Accessibility Compliance
- Site Plans
- Architectural Floor Plans
- Architectural Ceiling Plans
- Building Elevations and Sections
- Elevator and Stair Drawings

- Interior Elevations
- Door and Window Schedules and Details
- Interior Finish Schedule
- Interior Partition and Ceiling Details
- Radiation Shielding Plans

Structural Drawings

- Structural Design Criteria (general Notes) drawings
- Structural Foundations Plan
- Primary Structural Framing Floor Plans
- Structural Frame Elevations
- Typical Structural Details
- Special Structural Details
- Medical Equipment Plans and Anchorage Details
- Special Seismic Certification Equipment Schedule

Mechanical Drawings

- Mechanical Duct Piping Layout Plans
- Equipment Schedules
- Riser and Control Diagrams
- Mechanical Details

Plumbing Drawings

- Plumbing Fixture and Piping Layout Plans
- Fixture and Equipment Schedules
- Riser Diagrams for Supply, Vent and Waste Lines
- Plumbing Details

Electrical Drawings

- Electrical Power Distribution and Fixture Layout Plans
- Fixture and Equipment Schedules
- One-Line Diagrams
- Electrical Details

Other Disciplines as Required for the Project.

c. Recommended Graphics and Symbols

Although each set of drawings is a composite of drawings prepared by differing engineering disciplines, all drawings must maintain a level of graphic standards that are commonly used for

the project, and conveys a level of coordination to the OSHPD reviewer. Common practice follows an approach that includes:

- All disciplines should use the same plans, orientation and scale as the architectural plans.
- Numbering of drawing sheets should establish a common organization regardless of discipline.
- Where large projects require a separation of drawings into volumes, the organization of the set should be carefully arranged to allow reviewers to locate information easily. Indexes showing contents of each volume should be provided at the front of each volume of drawings.
- Where common elements are shown by different disciplines, or on enlarged or "typical" plans, great care must be taken to avoid conflicting information and redundancies that create confusion. The discipline having the greatest responsibility should provide the detailed information on their plans and other drawings should reference those plans.

Some information is needed to be reflected on all plan drawings to assist reviewers to assess compliance. This is particularly true for fire-rated partitions and other life-safety components that establish the compliance needs for mechanical and electrical work. It is highly recommended that all plans use common graphic, symbolic line work that identifies the following:

- One-hour fire partitions for corridors
- Rated walls for one, two, three, and four-hour occupancy separations
- Smoke barrier walls for smoke compartments
- Two-hour rated horizontal exit walls
- One and two-hour enclosures for stairs and shafts

Examples of recommended graphics for life-safety plans and base floor plans used by all disciplines are provided in an appendix to this section.

d. General Nomenclature

When developing the floor plans in the early stages of design, it may be appropriate to use terminology that comes from the hospital's staff, so all spaces required by the program may be accounted for in the schematic layouts. However, as the plans develop into construction documents, it is equally important that the room names and space designations reflect, as closely as possible, the code definitions provided in the CBSC. The importance of this relates to conveying on the drawings both what the room functions are relative to the code, and asking those reviewing the drawings to locate and account for required functions being included in the hospital plan.

Tip: *Use of room and space nomenclature in the CBC will facilitate a more expeditious plan review.*

Definitions are located at the beginning of each chapter of the CBC, specific to the chapter, as well as a general listing of definitions located in Chapter 2 for each of the California Building Code, Mechanical Code, Plumbing Code, Fire Code, and Chapter 1, Article 100 of the Electrical Code.

Some examples of common room names that can create confusion about occupancies include:

- Rooms that function as storage, but may be labeled "utility" or "supply"
- Rooms labeled as "Procedure," but do not define intended operations
- Patient rooms labeled as "Step-down," "Fast Track," or "Flexible," that do not fit code-defined uses

Terminology related to egress and components of the means of egress are also subject to misunderstandings when not carefully coordinated with terms used in Chapter 10 of the CBC for Means of Egress. For example:

- Use of the terms "corridor," "hallway," or "hall," and "exit passage"
- Proper descriptions for "exit," "exit passage," and "exit discharge"

When providing information on fire-rated construction and components defined in Chapter 7 of the CBC for fire and smoke protection features, utilizing code-compliant language when describing the performance levels for walls and doors is key to understanding how the plans provide for life safety provisions of the code. For example:

- Correct applications for "fire partition," "fire wall," and "fire barrier"
- Similarly, the proper use of "smoke partitions" and "smoke barriers"

3.3 Project Title Sheet

a. Purpose

The title sheet to a set of construction documents not only provides a general introduction to the project but also includes statements and descriptions for project-specific requirements, the basis of design for construction, and compliance with enforceable and applicable codes relevant to the project. Much of the information on the title sheet is general information for the contractors and presents the project scope and description, maps for location of the building, identification of the responsible design professionals and client, and general statements about the overall use of the documents. For small projects, or where room allows, it may also include an index to the drawings, site plans, and other overall drawings that help to describe the project scope and its setting, whether for a new building or for renovation of an existing building.

For reviewers of the drawings, the title sheet is also the preferred location for descriptions of building occupancy classifications, sizes, construction type, number of stories, and other general features of the design—all of which conveys the designers' intent and provides a basis of review for compliance.

For projects involving buildings or portions of buildings that are not under OSHPD jurisdiction, there should be a clear delineation of what portions of the project are being submitted for review. An example would be a utility project in which the building that houses the utility is subject to OSHPD review but the building to be serviced by the utility is subject to local government entity review.

b. Organization and Approach

The primary goal of the title sheet is to provide information in the clearest and most readable manner. The use of charts and outlines, simple descriptive phrases, and titled sections for each subject makes it easy for those who are not familiar with the project documents to find information relevant to their needs.

The actual organization may vary depending on the size and type of project, the amount of information needed, and the particular graphic approach used by the architect, including the size of the drawing sheet and any graphic requirements of the owner. Existing renovations and applicable phasing must be clearly documented through appropriate existing and phasing documents.

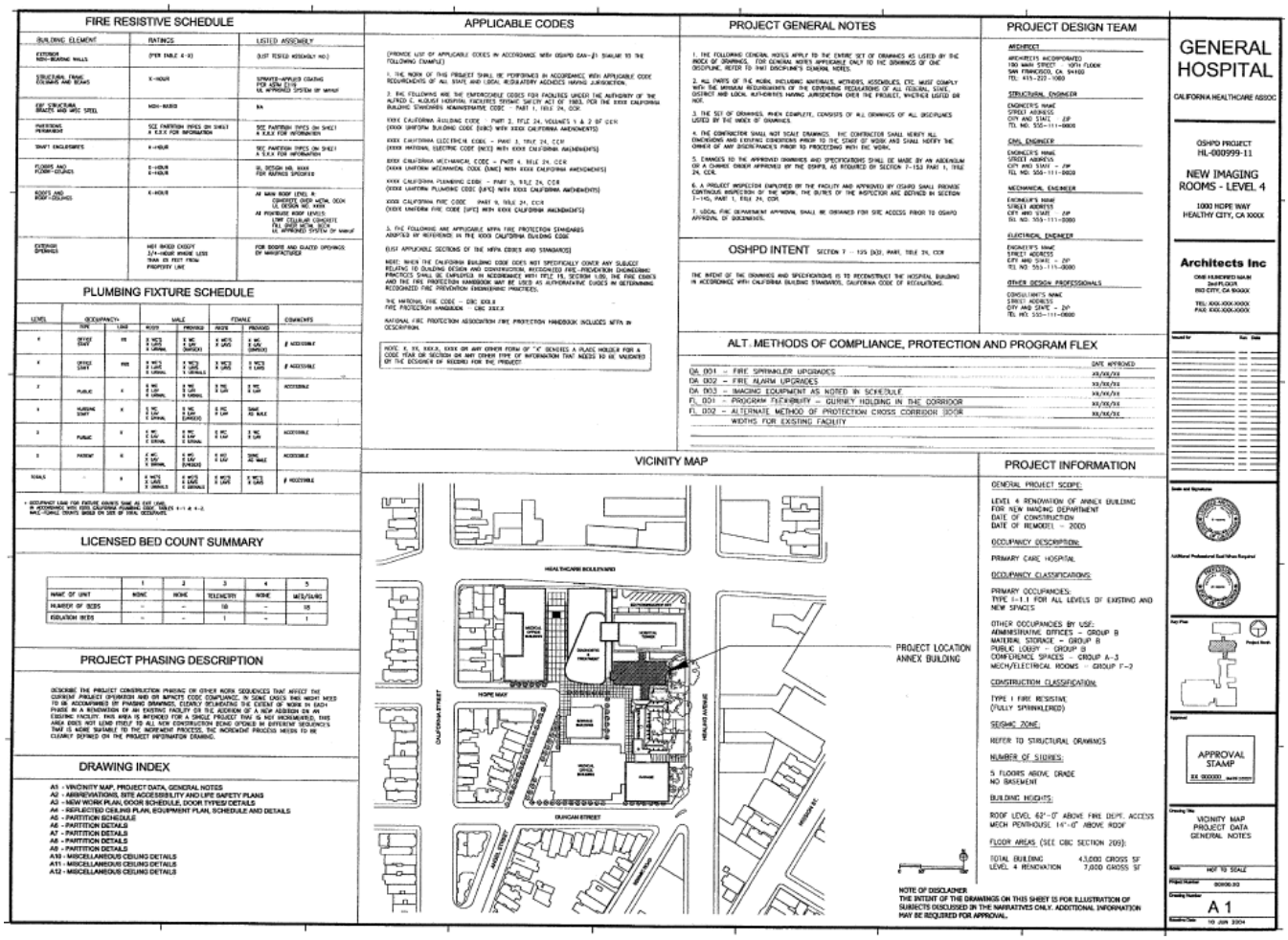

1) Title Block or Strip

Provide the proper name and address of the project, the facility, and the Registered Design Professional. Also provide OSHPD with the number or letter of each sheet, date of preparation and (if relevant) the date of revision, the scale, and the north point of reference. OSHPD strongly recommends that its project number, assigned at the time of application, be prominently noted on all sheets. The signed stamp of the Registered Design Professional and the signature of the architect or engineer in general responsible charge must be clearly shown. A space should also be reserved for the OSHPD approval stamp, provided at the time of signing. When a submittal package is part of an approved incremental construction package, the title sheet should identify the increment represented by the package and a list all increments that make up the complete project.

2) Project Team

Provide the proper names of all firms responsible for the drawings and other design documents; include mailing addresses, phone numbers, and fax numbers for contact. Other contact information as shown on the application for plan review, such as names of individuals, e-mail addresses, and project Websites, may be useful as determined by the Registered Design Professional in responsible charge. This information should match that provided in the Application for New Project.

3) Project Information

Provide a general description of the work (e.g., new, renovation, or addition) as applicable for the project. Use the latest edition of the Remodel Code Application Notice (CAN) 2-102.6 for projects that include additions, alterations, or repairs. Include in table form and/or drawing format the following:

- The occupancy classification of the building or portions of the building, related to new work as well as existing buildings, in accordance with California Building Code (CBC) Chapter 3, and any specific use or occupancies in accordance with CBC Chapters 4 and 12
- The date of construction of the original building (for addition and renovation projects) and building code under which building was originally designed
- Whether the building is fully or partially sprinklered or unsprinklered. If partially sprinklered, show boundaries or parts that are sprinklered;
- The type of fire alarm system within the building (i.e., full or partial smoke detection, etc.)
- The area of the building and number of stories and/or new construction, by occupancy and construction types, with a description of allowable increases, in accordance with CBC Chapter 5
- The construction type classifications in accordance with CBC Chapter 6 and Table 601
- The Seismic Design Category of the building in accordance with CBC Chapter 16A (or reference to structural information)
- Reference to OSHPD approved Alternate Methods of Compliance, Alternate Means of Protection, or Program Flexibility, in accordance with CBC Section 104.11 and Section 1224.2 Exception 2

4) Applicable Codes and Regulations

Provide a list of all codes and regulations that the project is required to meet in its construction, including the specific state and local regulations. The OSHPD Fire Life and Safety Officer has particular interest in specific National Fire Protection Association (NFPA) Codes and Standards, including applicable editions, pertinent to the project. Refer to CAN 1 for the current listing of

enforceable codes and CBC Chapter 35 for the current applicable editions of the NFPA Codes and Standards.

5) Fire-Resistive Schedule

Provide a listing or chart outlining the design of major building components and rated assemblies that correspond to the requirements listed in CBC Table 601. Each design element or assembly should have the intended specific item numbers from CBC Tables 720.1(1), 720.1(2), or 720.1(3) or State Fire Marshal-approved testing agency numbers, such as Underwriters Laboratories (UL), Warnock Hersey, Omega Point Laboratories, or other nationally recognized testing laboratories.

6) Deferred Submittals

Often it is necessary to defer the submission of some aspects of the building design until after the approval of the main design documents. A deferred submittal refers to a portion of construction that cannot be fully detailed on the approved plan because of variations in product design and manufacture. Such items include (but are not limited to) low-voltage electrical systems, elevators and other transportation systems, base isolation systems, curtain wall systems, fire sprinklers, and oxygen and medical gas systems. OSHPD has the discretionary authority to allow the design of such systems to be reviewed as a deferred submittal.

OSHPD does not accept deferred submittals for primary gravity or lateral load resisting systems or stairways. All items being allowed by OSHPD to be submitted as deferred submittals should be listed on the project title sheet with numerical assignments for each system or construction component. An item that has all information available for design cannot be deferred. The engineering specialty specification should list the performance requirements that the contractor is required to meet in preparing the documents and define the requirements of the California-licensed engineer(s) who must be employed to prepare the documents for OSHPD review and approval. For design of structural work, a California-licensed structural engineer is required. The specification should describe in detail the process for submittal of documents to the design team for review prior to their being submitted to OSHPD for their review and approval. This specification section should also include a statement that the contractor shall not start any construction work on deferred items prior to OSHPD approval of the contractor's design documents.

Tip: Deferred *submittals should be minimized to the extent possible to avoid construction delays.*

Stamping and signing of deferred approval documents must comply with the same requirements as for construction documents, as noted in Section 7-115, and in addition 7-126 of the California Administrative Code.

c. Other Information

Provide other general compliance information as appropriate for the project including, but not limited to:

- Plumbing fixture counts for public, staff, and patients, in accordance with the California Plumbing Code requirements
- Project construction phasing of other work sequences that affect the project operations or impact code compliance
- Other work not included in the project and carried out under other permits if it affects the project
- Local zoning conditions of approval related to the project
- Parking counts, as needed for local acceptance and Title 24 accessibility
- A chemical inventory on small projects, if other than new construction and remodel projects that alter the existing structural frame (formerly referred to as "H" projects), to show compliance with number of control areas and maximum allowable quantities of hazardous materials as listed in CBC Tables 307.1(1) and 307.1(2) (see OSHPD PIN 8 for required information and suggested format)

It is recommended that a tabulation or matrix be provided for projects resulting in a change in the number of patient bedrooms, isolation rooms, operating rooms, dietetic storage and refrigeration, general storage, and perinatal unit space. Such a tabulation or matrix should include the number of existing items as well as the proposed items. Include a matrix of bed count and type.

d. Existing Special Conditions

Projects that include additions and/or renovations of existing spaces within OSHPD-approved buildings present additional challenges to providing required documentation for approval of the project. To assist the reviewer in understanding how the new work does not conflict with required levels of safety provided by the existing facility, in many cases the drawings will need to fully describe adjacent uses and occupancies, existing construction, and prior approvals and documentation. Buildings or structures outside the scope of work, but proximate to the scope of work, should be identified by size, area, height, and building and construction type.

Often this information is unavailable from old drawings but needs to be ascertained by field investigation and measurement. The title sheet can only outline the existing conditions, occupancies, and construction to inform the reviewer of information that is presented in more detail with the plans and other drawings. However, in the brief descriptions of existing facilities, use of the same code-matching terminology is particularly important, and, whenever possible, drawings from previous OSHPD-approved projects for the existing facility and related work should be listed and attached (and specifically called out as "reference only" drawings).

Tip: *Providing "reference only" documents of approved existing conditions can speed up the plan review process for renovations by reducing comments and the number of back checks.*

3.4 Fire and Life Safety Drawings

a. Purpose

The fire and life safety drawings are intended to depict the life safety code requirements and assist the OSHPD reviewer by providing a graphic view of fire and life safety compliance and egress compliance for the project. For new projects this will include identifying all components of the exit path and building features that provide fire protection and separation of individual occupancies. For renovation projects, these drawings will also include a description of existing exit paths, types and ratings of walls, and separations as well as indicate how the new work will maintain or modify the life safety requirements for compliance.

The drawings should include special graphic floor plans, coordinated with detailed information on the construction floor plans. For smaller projects, a combined drawing is acceptable.

Tip: *Showing* fire-*rated walls on all architectural, mechanical, electrical, and deferred approval drawings will facilitate the plan review process.*

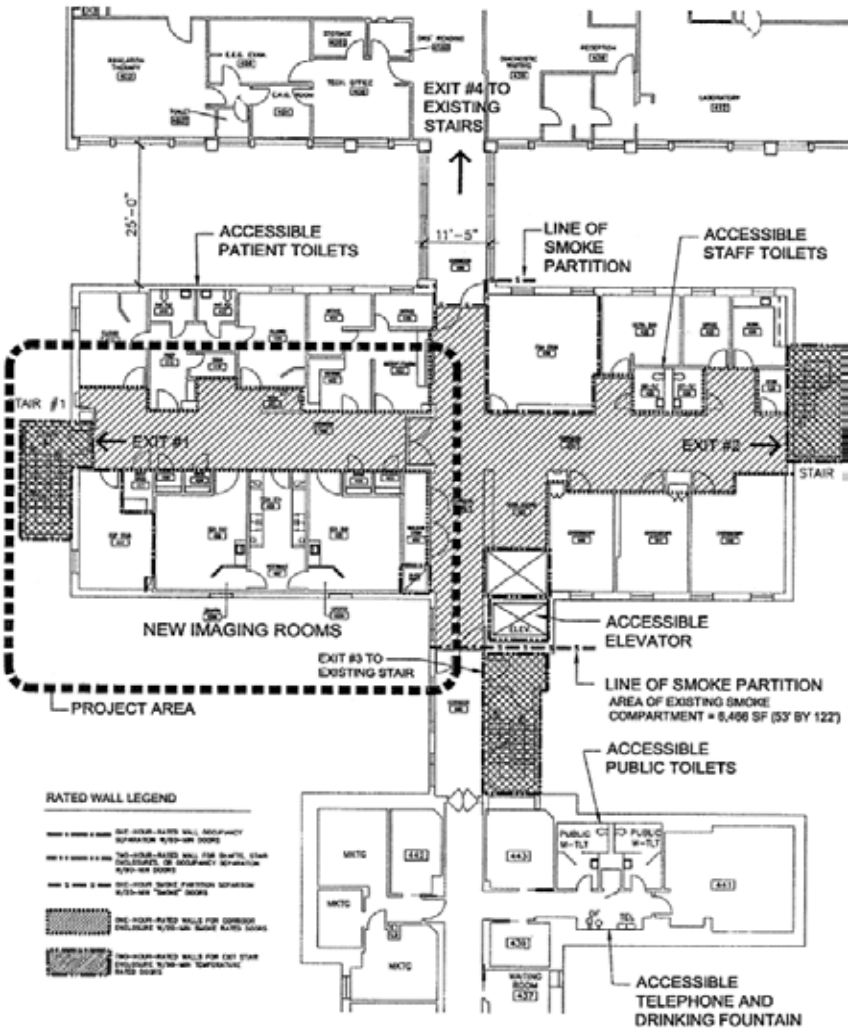

b. Organization and Approach

Floor plans specific to the life safety design should be provided, except in very small or simple projects, where information may be combined. All floor levels must be shown, even if they do not have an occupancy classification (e.g., roofs). The scale of the floor plans will depend on the building size and should ensure that all information is legible.

Site plans are also recommended, even for small renovation projects, to assist in describing the context of the project and the compliance of the existing building to basic site requirements.

Building sections are usually needed when occupancy separations are present between floors, when the floors of the building do not stack, or when the site slopes significantly. Another reason to include building sections is because the maximum allowed building heights in some occupancy may need to be shown. Building sections are required for new construction.

General notes are recommended to provide reference to other areas of the documents that provide additional life safety design and details needed for showing compliance. The following notes are recommended and must be coordinated with the project's actual scope and organization:

- The fire rating of the partitions is shown diagrammatically.
- For construction of partitions, see floor plans and partition construction drawings.
- These plans do not attempt to show all fire-rated ceilings and/ or horizontal partitions (such as bottom of shafts, for example) present in the building. See reflected ceiling plans and enlarged stairs and elevator drawings for conditions not shown here.
- For location and type of exit signs, see electrical drawings and specifications.
- For location and type of fire dampers, see mechanical drawings and specifications.
- For location and type of rated access panels in walls, see floor plans, plumbing drawings, and plumbing specifications.
- For location and type of fire-rated ceiling assemblies, see reflected ceiling plans.
- For location of sprinkler system elements, see reflected ceiling plans and plumbing drawings.
- For location of smoke detectors and other fire alarm devices, see electrical drawings or fire alarm drawings.
- For security devices, see security drawings.
- Unoccupied rooms must be designated for use by the design professionals, even if they are used for storage (e.g., clean utility, linen, medications, equipment, housekeeping, etc.); they may need to be constructed with a one-hour occupancy separation if they are in excess of 100 square feet. Similar one-hour occupancy separation should be given to electrical and tele/data (IT) rooms, regardless of size.
- Typical checklist issues for the fire marshal and life safety officers should include the following:
    - Head of wall details that provide 100% Class II movement
    - Resolution of the "T" rating requirement for through-slab penetrations such as floor sinks, floor drains, piping not contained within walls, etc.
    - Treatment of listed floor slab assemblies that use rebar in lieu of wire mesh
    - Fire-rated details for edge of slab that match the listing
    - Doors that must open 180° because they open into an 8-foot corridor

c. Drawing Content

Depending on the size and complexity of the project, the information provided on the fire and life safety drawings should provide a clear description of how the project complies with the various provisions of the CBC. Some of the general information for the project may also appear on the drawing title sheet. Also, much of the specific information will be contained in the body

of drawing details and schedules. It is not necessary to provide redundant information, but it is important to provide information that describes the basis of life safety design and is coordinated in a manner that is clear and complete. The following outlines the information that should be covered on the fire and life safety drawings by CBC chapters.

1) Provisions of CBC Chapter 3: Use and Occupancy Classification

Include the following information:

- Occupancy groups of building and spaces within building
- Occupancy separation location and rating
- Special provisions based on occupancy group, including construction, height, and areas
- Smoke compartment partition locations and calculations of areas as required for "I" occupancies, including length and width of smoke zones
- Location of building on property
- Required components of fire sprinkler and standpipe systems
- Required features of fire alarm and smoke detection systems
- Required components of egress signage
- Locations of and requirements for special hazards or hazardous materials that affect the occupancy classifications

2) Provisions of CBC Chapter 4: Special Detailed Requirements Based on Use and Occupancy

Include the following information:

- Requirements for atria spaces (when part of design) including:
    - components of smoke control system
    - separation of atria from other spaces, and o means of egress from and through atria
- Special requirements for high-rise buildings and hospital buildings over 75 feet tall including:
    - fire department access locations
    - special alarm and communication features
    - location and components of central control station
    - special features of elevator design
    - special provisions for egress stairways including stairwell and vestibule
- Special requirements for Group 1-2
    - special provisions for hospital corridors, waiting areas nurses' stations and gift shops
    - special provisions for mental health treatment areas
    - special requirements for corridor walls and corridor doors in hospitals

- special requirements for smoke barriers in hospitals
- special provisions for automatic sprinkler systems in 24-hour care facilities
- special provisions for secured yards
- provisions regulating special hazards

3) Provisions of CBC Chapter 5: General Building Heights and Areas

Include the following information:

- Requirements for building location on property, including exterior wall fire resistance, wall openings, and courtyard requirements
- Calculation of new building areas, or existing-plus-new areas, compared with allowable areas, including allowable increases
- Design heights of building(s) compared with maximum allowable height, including allowable increases
- Requirements for mezzanine spaces
- Description of fire-resistive substitutions, when applicable
- Location of separation walls and area calculations for separations

4) Provisions of CBC Chapter 6: Types of Construction

Drawings should include requirements for fire-resistive construction of building, exterior walls, stairway enclosures, side yards, and separations for fire rating of existing walls and openings

5) Provisions of CBC Chapter 7: Fire and Smoke Protection Features

Drawings should include details of fire resistance requirements for the following:

- Provisions for fire-resistance ratings of structural members exterior walls, fire walls and fire barriers
- Location and construction of shaft enclosures
- Provisions for the fire-resistance ratings of fire partitions, smoke barriers, smoke partitions and horizontal assemblies
- Provisions for the fire-resistance protection of penetrations and fire-resistant joint systems
- Details and locations of opening protective, ducts and air transfer openings
- Provisions for fire blocking and draft stopping concealed spaces
- References to the prescriptive fire-resistance tables in the CBC, fire tests from approved laboratories or fire resistance calculations

6) Provisions of CBC Chapter 8: Interior Finishes

Drawings should include details of interior finish requirements for the following:

- The flame spread and smoke development performance of wall and ceiling finishes

- The classification of interior floor finish materials
- The location of combustible material in Type I and Type II construction
- The location and flame spread, smoke development and fire retardant performance of decorative materials and trim
- The fire-resistance, flame spread and smoke development performance of acoustical ceiling systems

7) Provisions of CBC Chapter 9: Fire Protection Systems

Drawings should include details of requirements for fire protection systems including the following:

- Provisions for the installation of automatic sprinkler systems
- Requirements for the installation of alternative automatic fire-extinguishing systems
- Provisions for the installation of standpipe systems
- Details of locations of portable fire extinguishers
- Provisions for the installation of fire alarm, detection, emergency alarm systems and smoke control systems
- Requirements for fire command center in a hospital building over 75' tall
- Requirements for the location of fire department connections

8) Provisions of CBC Chapter 10: Means of Egress

Include the following information:

- Identification of occupant loads and exit paths
- Calculation of design exit widths and required widths
- Means of egress identification: identify security barriers (e.g.. locked doors) that may intervene in the path of travel and explain how they work to allow for free exiting in case of an emergency
- Location of doors and directions of door swings
- Locations of exit stairways and ramps
- Maximum exit travel distances
- Indications for minimum separation for two or more exits
- Calculations for horizontal exit refuge areas as required by CBC 1025.4
- General indication of ratings for egress elements, including:
    - corridors
    - exit stairway enclosures
    - stairway vestibules (for high-rise requirements)
    - exit passageways
    - horizontal exits

9) Provisions of California Fire Code and NFPA Standards

The following information requires the review and approval of the Local Fire Authority:

- Location of fire hose cabinets and connections
- Location of fire hydrants and fire department connections (FDCs)
- Location and configuration of fire department access
- Means for emergency entry for fire department access to stairs of buildings four or more stories in height
- Location and configuration of fire department alarm and/or notification panels (and subpanels where used)
- Designation of remote station location other than a public fire communication center or similar governmental agency
- Designation of primary and alternate floor levels for elevator recall
- Location of temporary walls needed to separate the occupied spaces from the construction zone to show how this will affect exiting and exiting width within the occupied areas of the building during construction
- Location of key box(es), when used
- Location of flammable liquid and LPG storage tanks
- Location and configuration of fire command center
- Provisions for removal of occupants from locked facilities and safe dispersal areas
- More restrictive requirements adopted by local ordinance

d. Working with the Local Fire Authority

OSHPD reviews fire sprinkler and standpipe installations, for compliance with the minimum requirements of NFPA Standard No. 13-2010, NFPA Standard No. 14-2007 and NFPA Standard No. 24-2010. OSHPD does not review projects for compliance with local fire flow, hydrant spacing, connection and control valve configuration, or location requirements. Review and approval by the local fire authority will be requested prior to final plan approval of the project. Local approval should be provided on forms available from OSHPD.

Tip: *Provide drawings that document the locations and details showing compliance to Fire Code and NFPA requirements.*

1) Local Fire Authority Fire Sprinkler and Fire Hydrant Requirements

- The location of the Fire Department Connection (FDC) must be in accordance with NFPA Standard No. 24, Section 5.9.5 and California Fire Code, Section 912.
- The location and type of system control valve(s) must be in accordance with NFPA Standard No. 13, Section 8.16.1.1.

- Fire flow and hydrant spacing must be in accordance with the requirements of NFPA Standard No. 24, Section 7.2.1 (for new construction only).

2) Local Fire and Water Authority Requirements

The installation, location, and configuration of the cross-connection control device (detector check) must be in accordance with the requirements of the California Fire Code and the California Plumbing code.

3) Local Fire Authority Approval

The fire flow, hydrant spacing, FDC, and location and type of control valves must be in accordance with the requirements of the statutory fire authority.

OSHPD reviews fire sprinkler installations for compliance with NFPA Standards in accordance with CBC Section 903.3.1. In addition to the specific requirements of the NFPA Standards, the location, configuration, and arrangement of fire mains, hydrants, FDCs, and control valves depend on site-specific conditions and the requirements of the local fire authority. To facilitate the review and approval process, the following performance standards should be considered when designing and preparing a fire sprinkler system for submittal:

- The FDC should be visible, accessible, and installed on the address side of the building.
- The FDC should be located at the public street as close to the curb face as possible. The distance from the FDC to the curb face should not exceed 25 feet.
- The FDC should be located within 150 feet of a public fire hydrant.
- The FDC should be located a minimum of 25 feet from the building. When this distance cannot be provided, a minimum two-hour fire-resistive wall should be provided.
- Each fire sprinkler system should have a main post indicator valve located at the public water valve connection.
- Each fire sprinkler riser should have an exterior control valve located above grade.
- The local water purveyor should be contacted for requirements pertaining to the installation of cross-connection backflow control devices (detector checks).
- The local fire jurisdiction should be contacted for requirements pertaining to fire flow and hydrant spacing. Requirements pertaining to fire flow, hydrant spacing, types of control valves, and the location of valves and connections vary from jurisdiction to jurisdiction and from facility to facility within each jurisdiction.

***Tip**: Adherence with the performance standards enumerated here does not necessarily assure compliance with local requirements. Documentation of local fire authority approval must be submitted to OSHPD prior to OSHPD approval.*

e. Existing Special Conditions

The same information required for new project areas is also required for existing areas that are not part of the construction scope, when those areas are adjacent and/or may be affected by the new work. The life safety drawings then provide a complete picture of the building, with the new work incorporated, that demonstrates compliance to all code requirements.

3.5 Accessibility Compliance Documentation

a. Purpose

OSHPD reviews design conformance with CBC Chapter 11B for accessibility requirements. There are differences between this code and the Americans with Disabilities Act Accessibility Guidelines, (ADAAG). The design professional is required to provide compliance to both the CBC and the ADAAG. The owner is accountable for compliance to both the ADA and the CBC accessibility requirements.

Drawings describing accessibility requirements provide the OSHPD reviewer with information that shows compliance to the provisions of CBC Chapter 11B, as well as other related requirements applied to the project from federal and local agencies.

b. Organization and Approach

It is the responsibility of the architect to design to code. By showing a code-required clearance on the drawings with the notation “minimum clear” the architect cannot transfer that responsibility to the contractor. Therefore the Contract Documents must show the actual dimensions, not merely code-required minimum or maximum dimensions.

Some reviewers may insist that the code-required dimensions be added to the drawings. A key note should clarify that the dimension added is for information only and that the contractor must build using the actual dimension shown. It should also be noted that normal construction tolerances may affect required dimensions for accessibility.

Tip: *Take construction tolerances into account when specifying absolute dimensions.*

Findings of equivalent facilitation by OSHPD for accessibility issues should be included in the drawings and should indicate where and how the equivalent facilitation is provided.

c. Drawing Content

Accessibility compliance review does not require the architect to prepare drawings dedicated to the topic. Instead, information may be dispersed throughout the set of architectural drawings. However, it is recommended to add a note to the general notations explaining where in the set the reviewer can find the information.

1) Site Plans

For new buildings, all entrances and exterior ground-floor exit doors shall be made accessible to persons with disabilities. Accessible parking and other site accessibility requirements, such as accessible routes to public transportation stops, accessible routes between other buildings on the site, etc., are subject to OSHPD review as noted in CAN 1-7-103, OSHPD Jurisdiction.

Tip: *Refer to Accessibility CAN 2- 11B for application of CBC accessibility requirements to hospital projects.*

2) Floor Plans

Include information on the accessible path of travel throughout facility or remodel project. If an area is not accessible, explain which one and why it is not accessible (e.g.. Mechanical Penthouse—no accessibility required by code):

- Enlarged drawings to illustrate toilet accessibility are recommended but are not absolutely necessary, especially if a typical mounting heights sheet is being used.
- Label toilets by user group as "Patient," "Staff," or "Public," and indicate which serve the remodeled area on remodel projects.
- On remodel projects show a small-scale plan of the whole facility with a clear designation of the remodeled area and show the accessible path of travel to it, from the entrance into the building.
- On remodel projects show the location of all existing and new toilets, drinking fountains, and public telephones serving the remodeled area and indicate if they are accessible or not.
- Code-required signage must be described and located on drawings and/or specifications; this includes signage for stairs, elevators, evacuation, toilets, maximum occupancy, assistive listening, hazards, and accessible entrances.

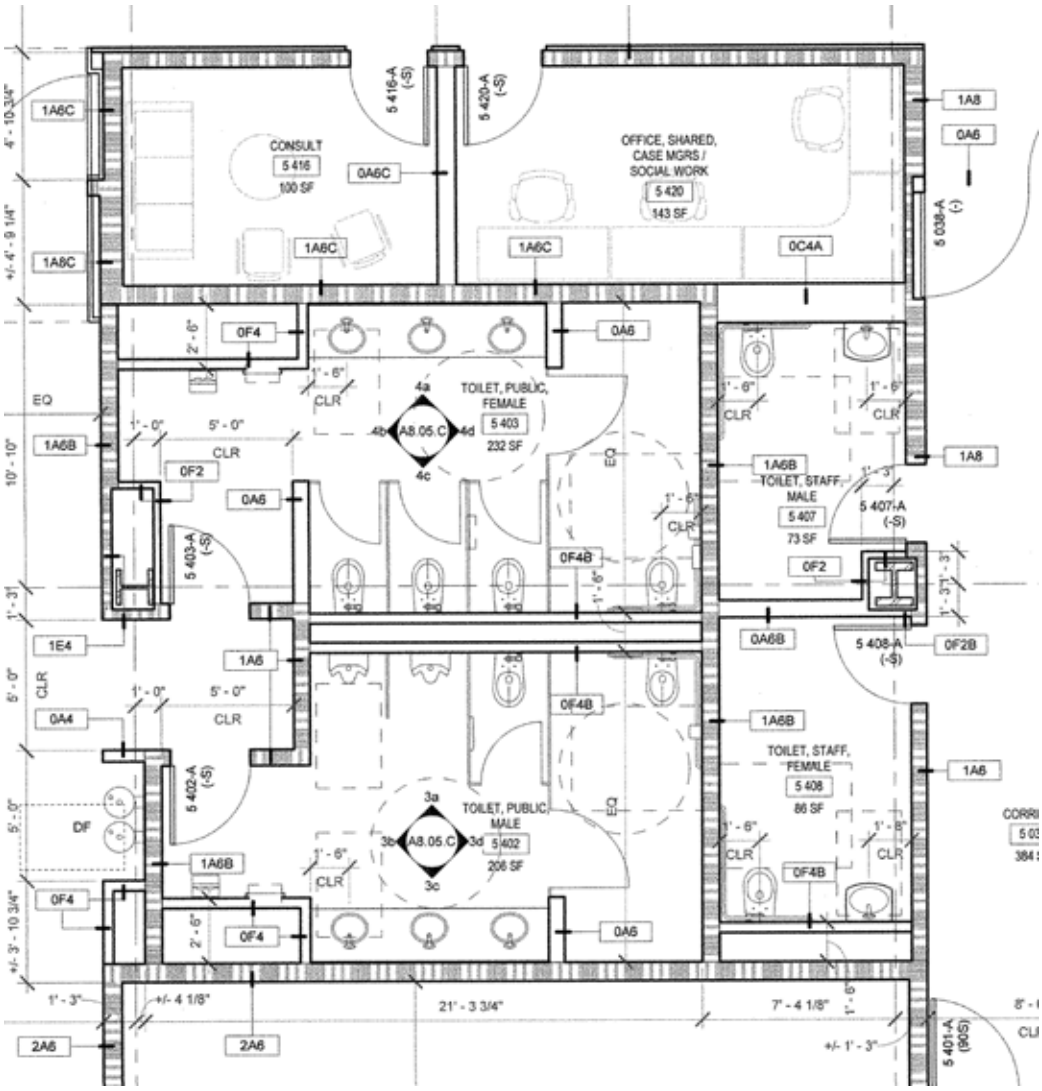

3) Enlarged Drawings

Provide enlarged drawings for toilets and bathrooms, stairs, elevators, special public and "stall" areas (e.g., reception desks, waiting rooms, and lockers), and patient bedrooms. At a minimum, enlarged drawings should be twice the size of general floor plans.

Tip: *Also include interior elevations of such spaces alongside of the enlarged plans to help explain how requirements for vertical dimensions are complied with.*

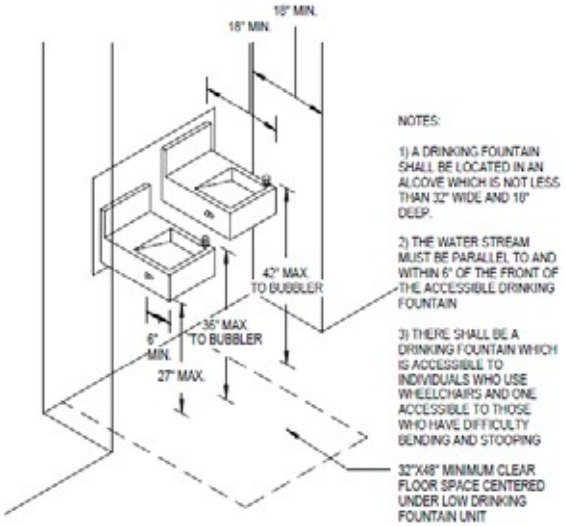

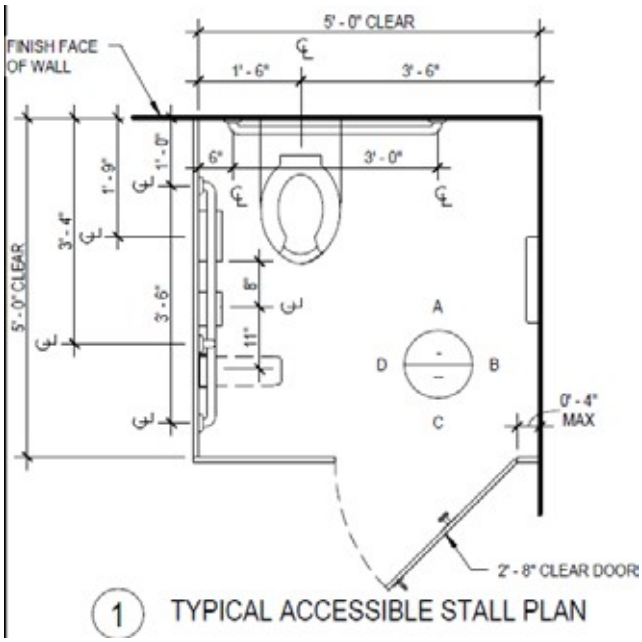

d. Existing Conditions

New additions and renovations to existing buildings may need additional information for accessibility that goes beyond the immediate scope of the project. This information may include

the location of accessible toilets that serve the new addition or area of renovation; details of existing elevators, ramps, and stairways that provide access to the new addition or area of renovation.

3.6 Door Schedule

a. Purpose

The door schedule provides the essential information for the reviewers to determine compliance with required egress widths and rated assemblies, as well as detailed information for the contractors to coordinate the construction of walls, finishes, and hardware.

b. Organization and Approach

Traditionally, there are several ways to document door information. One way includes providing width and ratings information directly on the plans; another includes referencing the door to a schedule or spreadsheet that lists all the pertinent information for the door types and hardware.

Tip: *Except in the smallest or simplest of projects, it is recommended that a schedule format be used.*

OPENING NO.	RATING	OPENING SIZE	DOOR			FRAME			HDWRE GROUP NO.	NOTES
			TYPE	MAT	GLASS	TYPE	MAT.	DTL.		
100A	20S	4-0”x7’-0”	A1	WD	-	F1	HM	12/A9.2	36	CARD READER
101A	60M	PR 4-0”x7’-0”	A3	WD	GL-1	F5	HM	23/A9.2	20	
101B	-	3-0”x7’-0”	B1	HM	-	H2	HM	15/A9/2	17	

c. Drawing Content

The door schedule must provide as its basic information the rating of the door and frame assembly commensurate with the wall rating and the door’s function. The function of the wall rating may be part of a one- hour corridor, a two-hour stair or exit passageway enclosure, a one-hour smoke compartment wall, or a rated occupancy separation wall. Rating requirements for openings in each of these wall conditions are provided in various sections of the CBC.

In addition to the door rating in minutes (e.g., 20, 45, 60, or 90 min), the schedule must indicate for the reviewer whether the door is required to be “tight-fitting smoke-and draft-control assemblies” typically with an “S” designation (e.g., 20S, 60S, etc.). Some doors may also be required to have a specified temperature rating, using a “T” designation in the door schedule.

Other door features that may be indicated in the door schedule for the reviewer's information include required door hardware such as panic devices, closers, view windows, etc.

The required width of the door is determined both by the occupant load assigned to pass through the door for exiting and by the specific requirements of its location within the hospital. Every means of egress door's minimum required opening width is identified in CBC Section 1008.1.1 as "sufficient for the occupant load thereof and shall provide a clear width of 32 inches" and "the maximum width of a swinging door shall be 48" nominal." CBC Section 1005.1 provides multipliers for determining the egress capacities of doors based on occupant loads. Hardware features and gap clearances for The Joint Commission (TJC) should be incorporated.

Required widths based on "I" occupancies indicated in CBC Section 1008.1.1 states, "Means of egress doors in a Group I-2 occupancy used for the movement of beds and litter patients shall provide a clear width not less than 44 inches." Given that the "clear" width at doors is measured inside the door stops, the 44-inch requirement is typically accommodated by 4-foot door leafs. Non-patient areas may use a standard 3-foot door leaf; however, it should be carefully noted whether the door is located within the overall exit path from the patient room or area, as it continues through the building and into the exit stair enclosure, to arrive at its safe, exterior termination. Doors along the exit path must maintain the required means of egress capacity width, which "shall not be diminished along the path of exit travel" (CBC Section 1003.6).

d. Existing or Special Conditions

Existing exit pathways, opening ratings, or other projects that include modifications to existing conditions should include information on both new and existing doors where such information is needed to describe the maintenance of door functions required by the design. The architect or engineer must verify with OSHPD that projects requiring construction of temporary walls and doors to separate construction from occupied spaces meet the same requirements as permanent construction when providing protection for exit corridors, occupancy separations, and other rated conditions.

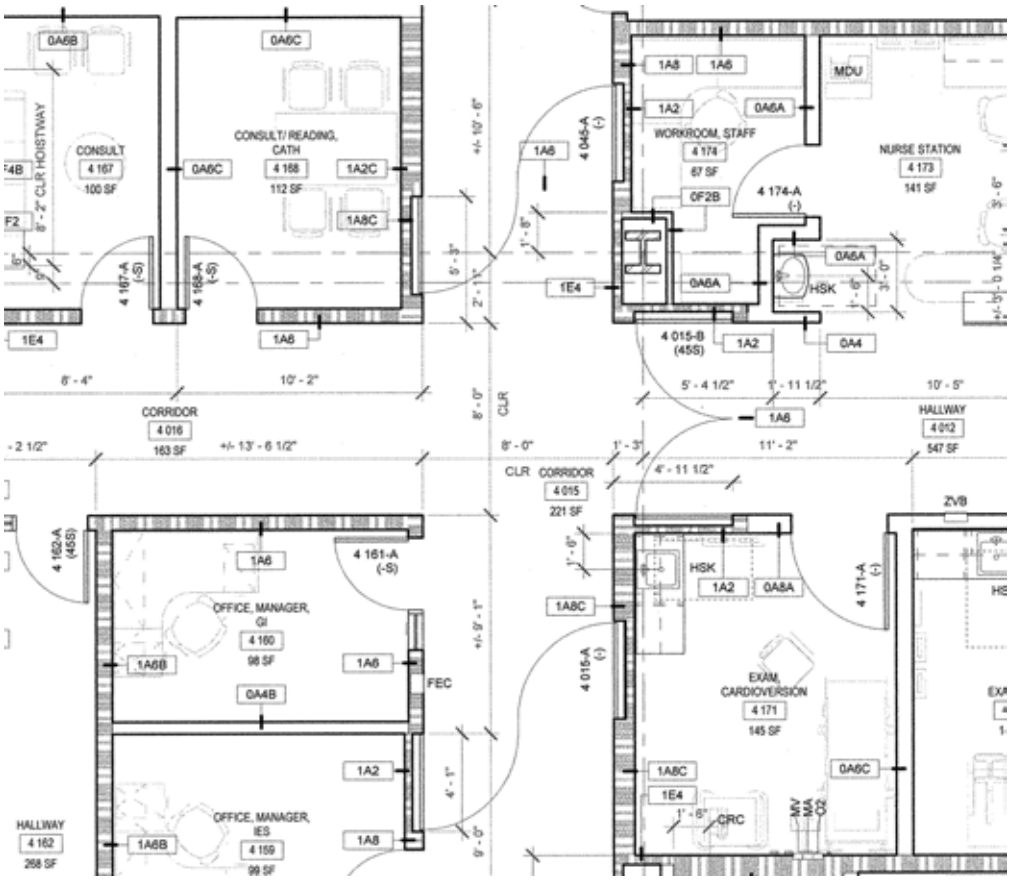

3.7 Equipment Anchorage

a. Purpose

Permanent equipment and other manufactured items used in the operation of the building are required to be anchored to the floor, wall, or roof construction. The anchorage shall be designed for gravity, seismic, wind, and other forces and displacements as required by the CBC. The primary considerations are position retention, structural integrity and functionality of the equipment and components when subjected to a design earthquake. Equipment within the building must resist forces caused by a seismic event, which vary based on equipment location in the building. These forces must be delivered to elements of the building structure capable of resisting them.

Although all permanent components, equipment, and elements of the structure must be anchored, the anchorage of some items need not be designed and detailed on the approved drawings. Chapter 16A in Part 2 of the CBC provides exemptions as follows:

- Furniture (however, modular furniture that is hardwired, contains significant storage, or exceeds certain height and weight limits must be anchored)
- Temporary or movable equipment (although restraints for heavy equipment and equipment with utility connections may be required)
- Architectural, mechanical and electrical components in Seismic Design Categories D, E, or F where all of the following apply:
    - The component is positively attached to the structure
    - Flexible connections are provided between the component and associated ductwork, piping and conduit; and either:
        - The component weighs 400 pounds or less and has a center of mass located 4 feet or less above the adjacent floor or roof level that directly support the component or,
        - The component weighs 20 pounds or less or, in the case of a distributed system, 5 lbs/ft or less

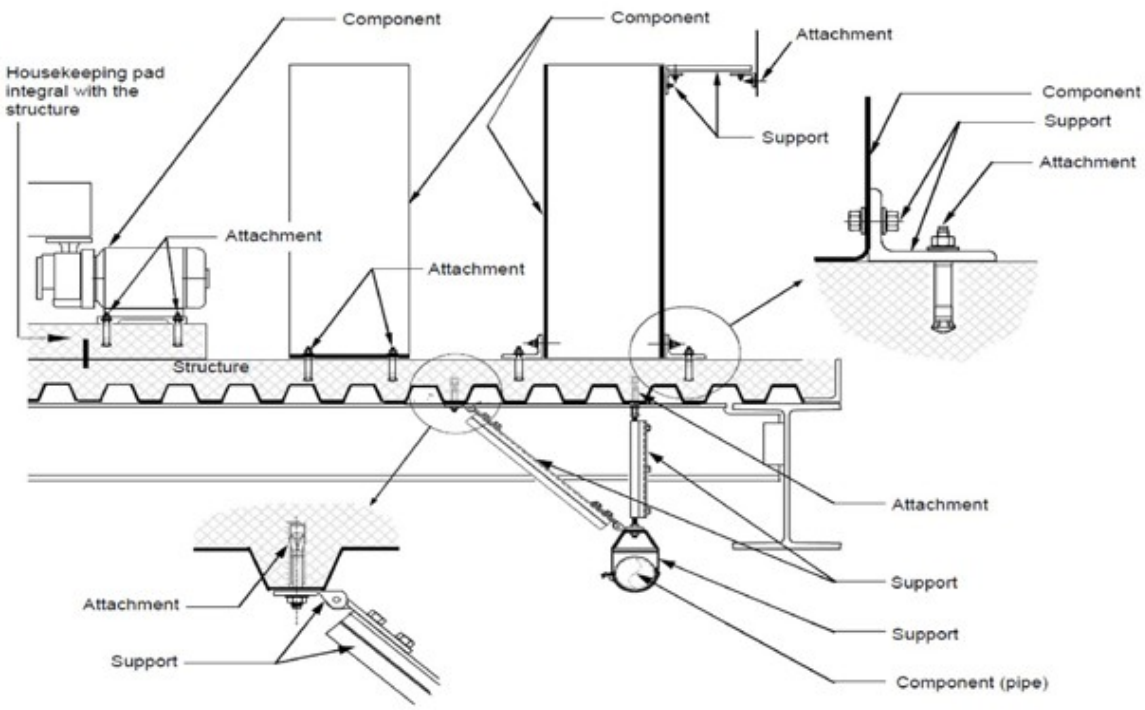

In many instances the information needed to provide details for specific products may be lacking in a project. Sometimes, with OSHPD acceptance, equipment anchorage may be submitted as a deferred submittal. However, it is generally more desirable to submit all equipment with the initial submission documents than to separate the equipment details, to avoid delays in approval that might affect construction. This means that design decisions must be made in advance to allow the details to be completed, and as selections and procurement dictate changes, changes submitted to OSHPD as an Amended Construction Document must be issued for each final installation. In addition to seismic anchorage, the CBC Chapter 17A requires Special Seismic Certification for certain mechanical and electrical equipment "that must remain operable following the design earthquake." Such equipment must be certified by the manufacturers as operable based on approved "shake table testing" or other methods provided for in the code. OSHPD has instituted OSHPD Special Seismic Certification Preapproval (OSP) program to facilitate the process.

b. Organization and Approach

On small projects the amount of equipment and anchorage details may be limited enough for direct reference of plan-noted equipment to the detail drawings. On larger or more complex projects, it is recommended that significant equipment be listed in a table or chart with detail references, equipment descriptions, and OSHPD pre- approval numbers provided for each appropriate item. The sample equipment schedule in the Appendix identifies the minimum amount of information needed for review.

Additional information may include room locations, manufacturer's name and model numbers, responsibilities for supply and installation, and utility connection information.

Since anchorage details are specific to products, a numbering system, either provided by the owner or created for the project, is important for tracking equipment and changes throughout the construction. When any object needs to be bolted to the floor, the owner should be asking questions about cleaning, maintenance access, etc.

EQUIPMENT SCHEDULE									
EQUIP NO.	DESCRIP-TION	MANUF.	ATTACHED TO	EQUIPMENT PROPERTIES				DETAIL NO.	OSHPD PRE-APPROVAL
				WT	W	D	H		

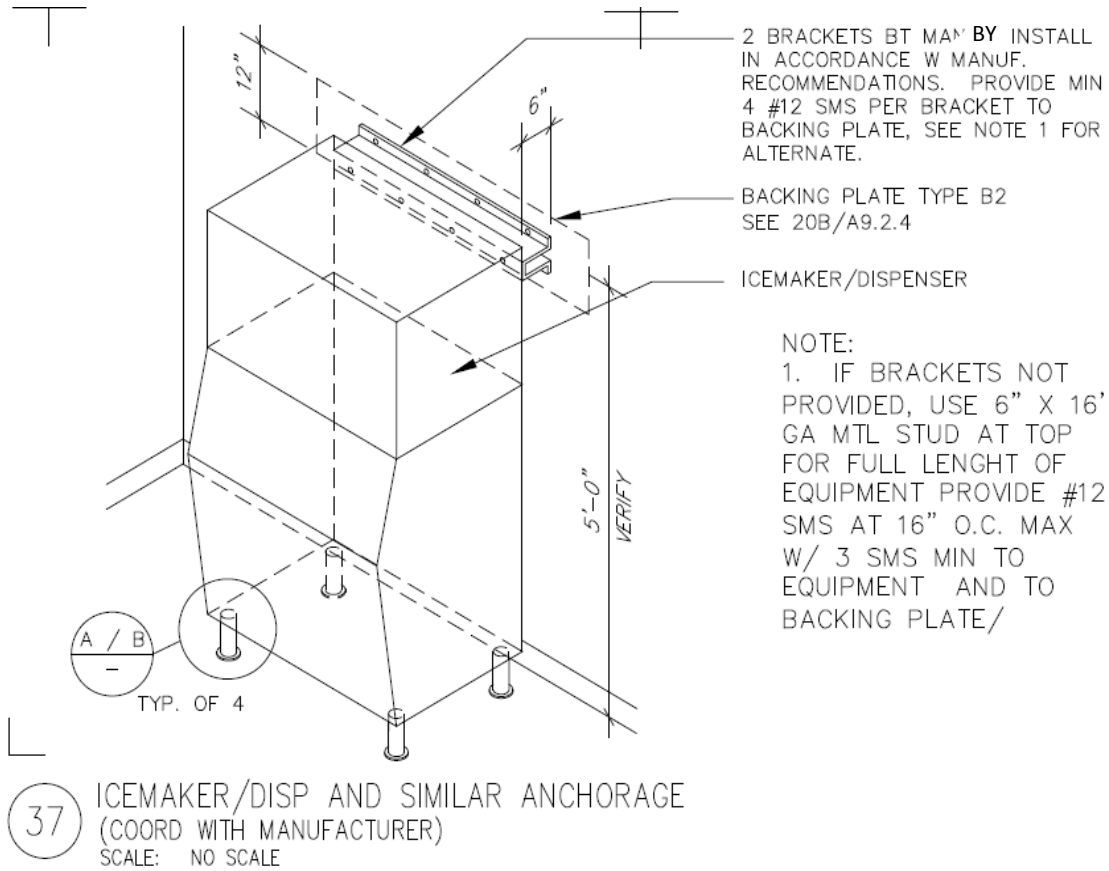

c. Drawing Content

Equipment may include medical, mechanical, plumbing, electrical, food service, or accessory items such as shelving and appliances. Equipment may be installed by the contractor, the owner, or special vendors. Regardless of who performs the installation, for the purposes of construction, all items need information on the drawings to describe their installation. Anchorage of standard items, such as ceilings and casework, is best covered in the drawings by typical details. These may include typical backing-plate requirements for wall framing and clip attachments to walls, counters, and floors for miscellaneous items found throughout the project in toilets, kitchens, treatment and exam rooms, etc. Drawings may also cover the anchorage of items exempt from plan review (discussed in the preceding section). However, such details are subject to plan review, and changes from the approved drawings may generate a post approval document review.

For those pieces of equipment that exceed the criteria for exemptions, specific details designed by the EOR or provided by the manufacturer's (California- registered) engineer are required on the drawings. Some manufacturers have engineered anchorage systems that have been

submitted to OSHPD under its Anchorage Pre- Approval Program. Pre-approval is for anchorage only and does not include product approval. This program allows the use of pre-approved drawings for equipment anchorage, in most cases, to show just the pre-approval number. However, in some cases, the actual details submitted by the manufacturer should be reproduced on the drawings for the reviewer to verify that the anchorage design is correctly applied to the project. If this is required, it will be stated in the pre-approval documents. The list of pre-approved anchorage for equipment is maintained by OSHPD and provided on its Website for use by design professionals. If a pre-approved product or system is specified, it is vital that the design team review the actual pre-approval documents to confirm that they conform to the project requirements.

The acceptability of proprietary fastening systems should be as specified in the CBC.

When equipment cannot be specified at the time of submittal, the design team may request that the item be deferred. Deferred items are to be listed in a schedule on the cover sheet of the drawings. However, assumptions should be made for equipment weights, location, and utility connections to allow the reviewers to check related items (such as the supporting structural framing) and to permit tracking of follow-up Amended Construction Documents for anchorage details.

The drawings and specifications must fully describe the performance and loading criteria for the deferred item.

3.8 Architectural Details

a. Purpose

Details developed by the Registered Design Professional are intended to convey construction requirements to the contractors which, when properly constructed, complete the design intent as well as meet the code requirements for structural integrity and life-safety. While it is not possible to provide details that reflect every possible condition of the construction, it is desirable to provide enough details, typical to the various conditions of the project, which establish the minimum construction standards.

Tip: *Follow current industry standards when developing these details.*

For interior partition construction and gypsum ceilings, such standards may include:

- CBC, Table 720.1(2)
- Gypsum Association, Fire Resistive Design Manual
- Leading manufacturers of Gypsum and Metal Stud Products
- Metal Stud Manufacturers' Association (SSMA)

- Designs tested and published by an approved testing agency (UL, Intertek, Omega Point, etc.)

Tip: *To further assist in the correct application of interior details for partitions and ceiling construction, OSHPD has established a program of developing pre-approved details which will provide the Registered Design Professional a library of details that, when properly used, meet the requirements of California Building Code.*

Tip: *For small projects that may be categorized as "Field Review," "Exempt," or "Expedited Review," additional information is provided in the FREER Manual, which provides design criteria for various, minor non-structural work, which a hospital may undertake.*

b. Organization and Approach

Architectural interior details should be organized, as much as possible, based on subject matter, such as details for structural design, details for fire-resistive construction, and details for non-rated architectural finishes, etc. It is important to provide adequate references on the plans, or in notes, to assist in locating the proper details

General application details may be more appropriate un-referenced on the plans, however, it should be clear where these details apply. Where common standard details are provided for interior partitions, they may be organized in a schedule-type format to allow "tagging" of walls shown on the plans, which reference the various typical construction details. These details may cover required rated construction, acoustical requirements, and typical common construction of chase walls, shaft walls, and walls with radiation shielding. Where fire-resistive partition details are provided, the correct UL, or other testing agency, number must be provided to show compliance to the intended rating.

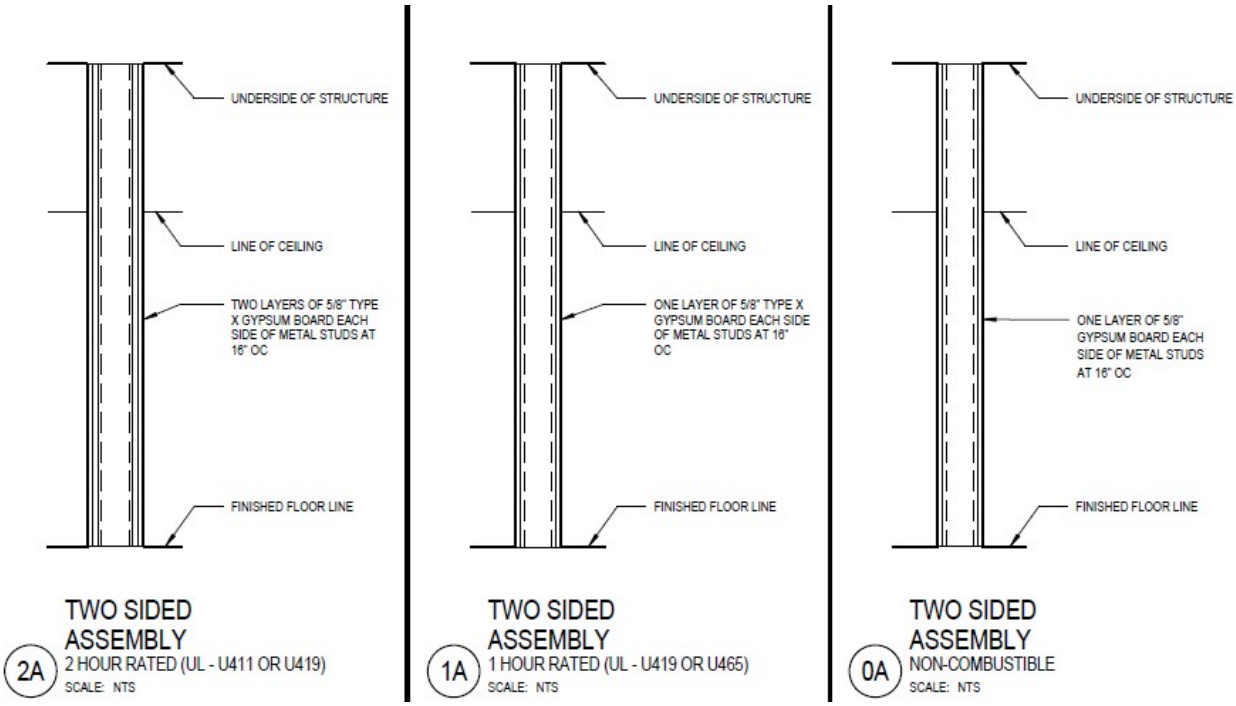

c. Drawing Content

For details that provide information on structural connectors, proper sizing of connectors must be supported by engineering calculations and industry- assigned values, according to the loading on the connection and the Seismic Design Category of the Project. Component identification should also conform to industry nomenclature for structural shapes, sizes and weights—such as the standard designation of studs provided by the SSMA.

OSHPD has initiated a Standard Details program, which provides typical details which may be used by the Design Professional. OSHPD Pre- approved Details (OPDs) are available from the FDD Website for use by the Registered Design Professional. The responsibility for the proper use and application of these details remains with the responsible Design Professional.

Details that provide information on tested rated assemblies should, similarly, adhere to the details provided by the test documentation, either by Underwriters Laboratories, or other approved agencies.

PLOT DATE: Aug 15, 2011

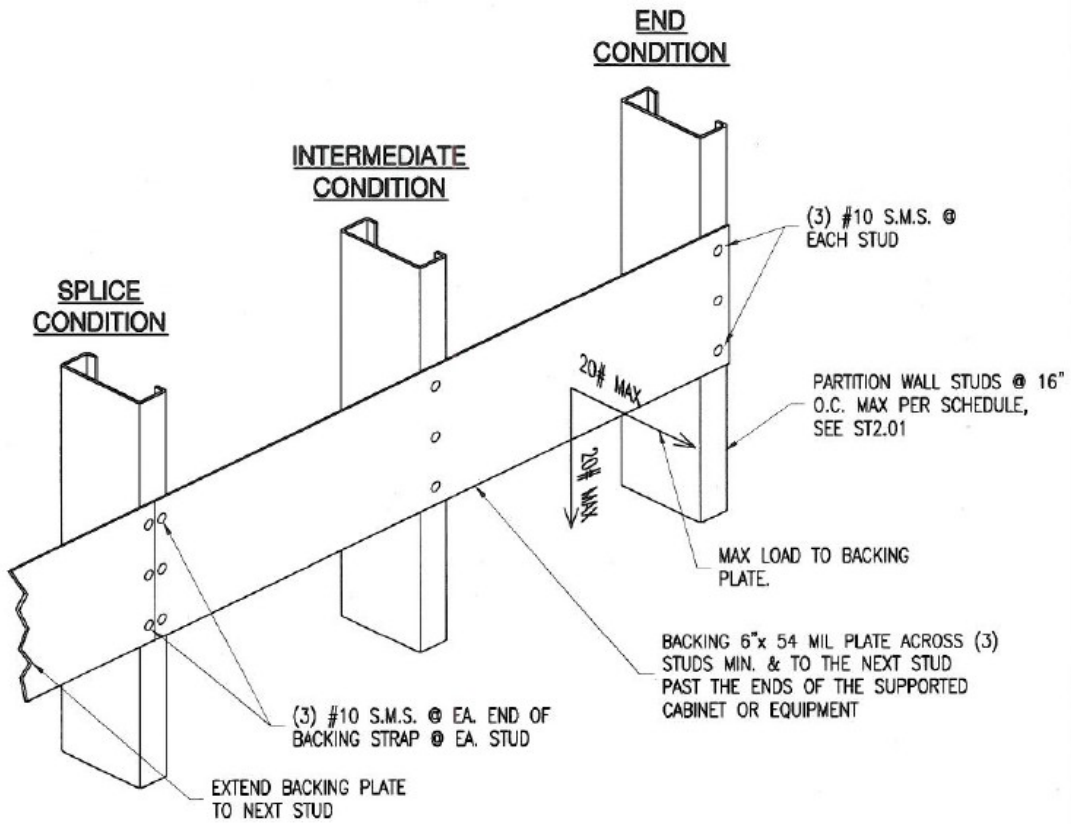

BACKING PLATE DETAIL TYPE 2

NOTES:

1. THIS DETAIL MAY BE USED FOR ATTACHMENT OF CABINETS OR EQUIPMENT DISTRIBUTING LESS THAN 20# PER STUD (CENTER OF GRAVITY LESS THAN 6" FROM FACE OF STUD).
2. SEE ST5.00 FOR ALTERNATE WELDING OPTION.
3. NOTCHING OR CUTTING OF BACKING PLATE IS NOT PERMITTED.

REVIEWED IN ACCORDANCE WITH THE REQUIREMENTS OF T24, CCR
APPROVED
Office of Statewide Health Planning & Development
FACILITIES DEVELOPMENT DIVISION

AGENCY STAMP

CODE: 2007 CBC

SECTION TITLE: STANDARD PARTITION WALL DETAILS

SHEET TITLE: BACKING PLATE DETAIL TYPE 2

ISSUE DATE: 08/15/11

REVISION: DATE:

OPD NO.: ST5.01

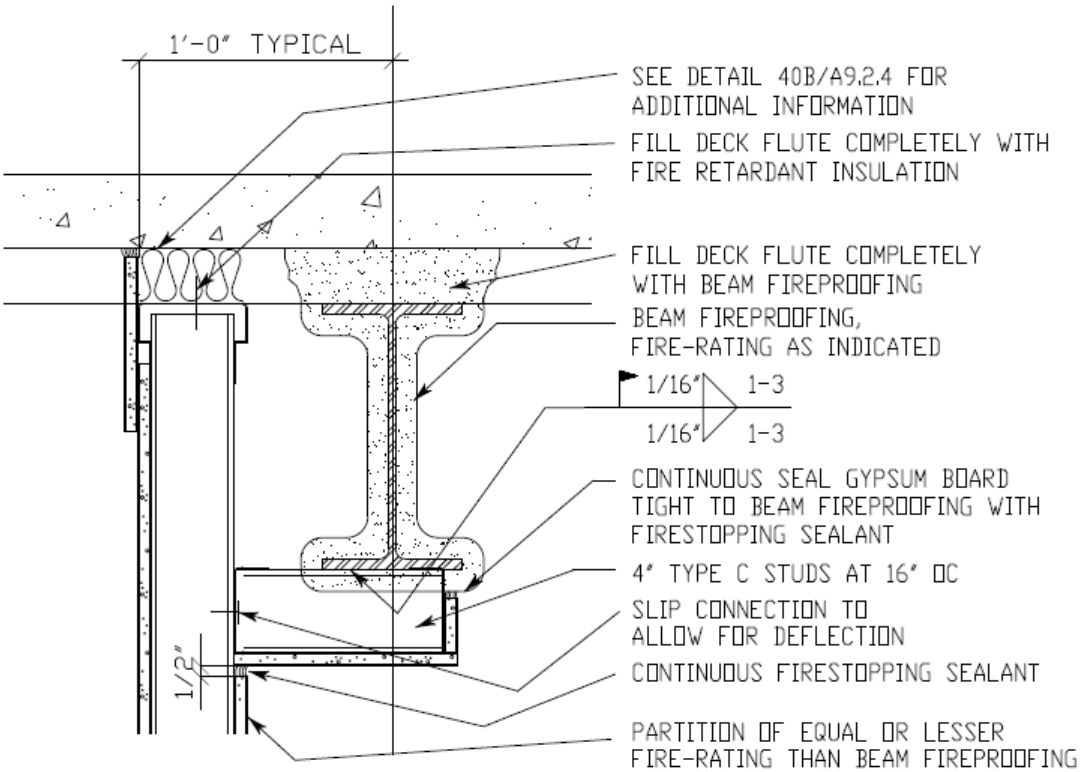

Tip: *For fire-resistive construction provide the construction detail with the identifying UL number.*

Where project conditions require a variation to the tested details, an "engineering judgment" may need to be made by a qualified representative of the manufacturer, a registered professional engineer, fire protection engineer or an approved independent testing agency, and should be incorporated into the approved drawings.

3.9 Guidelines for Structural Drawings

a. General Guidelines

The Structural Engineer, as a member of the Design Team has the primary role of developing the structural system necessary to meet the needs of the architectural design as well as the code required performance of the gravity and lateral (seismic, wind, etc) systems, dictated by seismic design category and the site specific conditions. Most project designs start with the analysis of the site conditions (geotechnical issues, geologic hazard, flood, etc.) and the selection of the primary structural systems, which will determine the framework of the building, and support all architectural and MEP systems.

Although much of the structural engineer's work is determined by the site conditions and code design requirements for lateral (seismic, wind, thermal, flood, etc.) and gravity loads, the key to the success of the design process is a high degree of coordination with mechanical, HVAC and piping as well as the architectural systems of the exterior cladding and interior partitioning. It is essential that the Structure Engineer have early involvement in the planning process and contribute to the Design Team solutions to the building that respond to Code and inform the Architect and MEP engineers what considerations need to be made in developing their designs. Early activities may include:

- Compile site specific conditions as early as possible like existing buildings, survey of grades, geo-hazard and geotechnical reports
- Identify important project objectives like open spaces, long spans, floor plan flexibility
- Develop structural schematic design alternatives based on early planning, site conditions, and project objectives
- Select optimum design alternative and validate major structural systems using approximate analytical methods
- Establish, quantify, and validate all sources of structural loading
- Identify all conditions requiring alternate design procedures and/or special testing of structural elements
- Coordination with ALL design disciplines for structural member penetrations, depths, support, bracing, anchorage, and other structural considerations
- Establish all elements of the Designated Seismic System
- Define structural engineering design requirements for building system components (non-structural)

b. Working with OSHPD Structural

Early in the design process, it is also essential to start communicating with OSHPD staff to identify any special issues and approaches necessary for the structural design to consider when developing the basis of design for lateral and gravity systems. For larger, new hospital projects, this might occur at a general kick-off meeting with OSHPD review staff to introduce the project and nature of the structural systems. For smaller projects, or renovations of existing hospitals, this might be a short meeting with structural reviewers to review special aspects of the project which have structural issues.

- Identify all conditions requiring alternate design procedures and/or special testing of structural elements.
- Identify and validate design methodologies with OSHPD for structures with special design considerations.

As the building design progresses and structural documents are developed in coordination with the Architect and MEP Engineers, the Structural Engineer should be considering the following:

- Complete analysis and design of major structural systems, members, and connections
- Identify, map, and analytically validate all building load paths
- Establish all member and connection capacities
- Establish an appropriate analysis and design methodology
- Identify structural requirements for the Test, Inspection, and Observation program
- Regular internal peer review of structural systems throughout the design process

c. Organization and Approach

Overall quality of the design and the documents for the structural drawings will depend on having the right individuals with the right experience, as well as following established engineering processes for documentation and team coordination.

- Only assign design professionals to the project with California hospital design experience.
- Establish early involvement of structural engineering expertise.
- Maintain the same engineering resources throughout the project design, OSHPD plan review, and construction.
- Apply design drawing standards for quality assurance.
- Validate computer generated results by manual hand calculations at critical locations.
- Cross coordinate structural plans, sections, details, notes, and specifications.
- Coordinate with other project design professionals to confirm geometric compatibility of AMPE systems components.
- Maintain Structural Engineer of Record involvement throughout the project until construction is complete.
- Provide for regular site visits by the project structural engineering personnel.

d. Drawing Contents

The structural drawings should include coordinated framing, foundation, and details that use Industry standard graphics and symbols common to structural construction documents.

TIP: *Place general information on the structural basis of design and the Design Criteria for complex project on first sheets.*

Schematic design should include a presentation of the design criteria, demand on the building, and the primary structural system definition including foundations, framing systems, lateral force resisting systems, earth retention systems, etc.

Detail design should include the necessary specification, analysis, and detailing that addresses the interconnections of primary structural elements that form complete load paths.

Working drawings that are submitted to OSHPD for review must be complete. They must provide thorough and high resolution detailing that integrates both the interconnection of primary and secondary structural elements with complete load paths as well as details that demonstrate the coordination of other disciplines. The complete specification of required materials and workmanship should be provided. Detailed drawings of anchorage and bracing of non-structural building components should be complete and be accompanied by references to seismic certifications, standard details, and pre-approvals.

3.10 Guidelines for Mechanical Drawings

a. Purpose

The purpose of the Mechanical Drawings is intended to depict all mechanical systems and components necessary to provide code minimum heating, ventilating and air-conditioning (HVAC) services within the hospital.

b. Content

Based upon the complexity and scale of the project, the information provided on the Mechanical drawings should show clear description of the work required for the project. In many cases, the project may involve the documentation of existing mechanical systems and should clearly identify new versus existing systems.

Some of the key components necessary on plans for all projects include:

- Identify any equipment that requires seismic certification and/or essential power
- Identify equipment mounting detail locations
- Provide humidification and temperature control for sensitive rooms as listed in CMC Chapter 3
- Provide calculations that demonstrate that each room within the project is designed per CMC Table-4A. If the room is not listed in Table-4A, it is important to provide an equivalent room
- Identify airflow pressure room relationships in either table format or on the plans via flow arrows
- Indicate wall ratings and locations of fire/smoke dampers
- Provide the appropriate flexible connections where ductwork, etc. crosses seismic and other expansion joints

Remodel projects within a hospital require precautions and measurements prior to start of construction to insure that airflows in existing areas outside the project are not affected.

Tip: *Following CAN 2-102.6 for remodel/renovation projects is critical in order to minimize OSHPD plan check comments.*

Tip: *Provide an air balance schedule that provides the following information. This will expedite the plan review process as well as the air balancing of the systems during construction.*

PARTIAL AIR BALANCE SCHEDULE (AHU-3)																
RM#	ROOM NAME	2016 CMC		2016 CMC CODE CALCULATIONS					DESIGN CALCULATIONS							
		TABLE 4A EQUIVALENT	VOLUME CU.FT.	REL. PRESS	TOTAL ACH/HR	TOTAL CFM	OSA ACH/HR	OSA CFM	SA CFM	RA CFM	EA CFM	TA CFM	TA To/From	OSA CFM	NOTES
1636	SEMI-PRIVATE PATIENT ROOM	PATIENT ROOM	2870	NR	6	290	2	80	560	460	0	-100	1637	195	
1637	PATIENT TOILET	TOILET ROOM	570	N	10	98	0	0	0	0	100	+100	1636		
1642	CORRIDOR	PATIENT AREA CORRIDOR	4800	NR	4	320	2	160	600	550	-	0	-	170	
2108	NEG. ISOLATION ROOM	AIRBORNE INFECTION ISOLATION ROOM	1596	N	12	320	2	53	325	-	400	+75	2168	90	
2167	PATIENT TOILET	TOILET ROOM	456	N	10	76	0	0	-	-	100	+100	2166		
2168	ANTE ROOM	AIRBORNE INFECTION ISOLATION ANTEROOM	264	P	10	44	2	9	175	-	-	-175	2166	50	
1201	OPERATING ROOM	OPERATING ROOM	5184	P	20	1728	5	432	1800	1530	-	-270	1279	515	
1279	SUB STERILE	SUB STERILE ROOM	6720	NR	10	1120	2	224	1200	-	930	+255	1201	345	
1256	RECOVERY AREA	POST ANESTHESIA CARE UNIT	3840	NR	6	384	2	128	450	-	450	0	-	130	
		Totals				4395		1095	5130	2510	1680	0		1460	

ABBREVIATIONS: NR - No Directional Requirement, N - Negative, P - Positive, AC - Air Changes, OSA - Outside Air, SA - Supply Air, RA - Return Air, EA - Exhaust Air, TA - Transfer Air

Some additional key components necessary for remodel plans include:

- Identify project boundary and be sure it matches architectural plans
- Identify any temporary construction barriers
- Provide a means to insure that airflows outside the project boundary will be maintained

1) Information Plans

Various types of drawings are necessary to convey essential information such as Schedules, Piping Diagrams, Mounting Details and Control Diagrams.

The title page should clearly define the project location and vicinity by graphical means. The applicable building codes, including the year and supplements date, should be stated. A drawing index is recommended to clearly identify all the unique systems that may be involved.

2) Site Plans

If the project involves outside (exterior) mechanical work, then it should be clearly shown in the site plan documentation.

3) Floor Plans

It is recommended to follow the architectural floor plan nomenclature for sheet order and sheet numbering in order to simplify the logical sequence of cross-coordination with all trades (disciplines). Traditionally, the floor plans provide the documentation of the architectural features as a shaded background and the mechanical devices are prominently shown on top of these locations. However, it is important to clearly identify room names and wall ratings for OSHPD review.

4) Enlarged Drawings

The drawings that contain a significant amount of information require much more space to clearly communicate the scope of work. These drawings tend to be the ¼" scale or larger, in order to show exact placements and or intent. In addition, these drawings may comprise several elevations to demonstrate the intent.

c. Organization and Approach

The Mechanical drawings represent work that is closely coordinated with many other disciplines such as architectural, structural, electrical, and plumbing. The need to have very well coordinated drawings is equally important with all disciplines. Based on many experiences, last minute changes might be simple for one discipline but can be a large problem for another, for example, a last minute room change.

The mechanical drawings should reflect the clear scope of work and the application of separate systems on their own drawings will provide better definition of the intended work. Examples of this are as follows:

Sheet Number:	Sheet Description:
M001	Mechanical Title Sheet, Drawing Index
M002	Schedules, Notes, Table 4-A Calculations
M100	Site Plan – Mechanical
M201	1st Floor Plan – Mechanical & Hydronic Plans
M202	2nd Floor Plan – Mechanical & Hydronic Plans
M301	Enlarged Floor Plans - Mechanical
M401	Piping Diagrams
M501	Details
M601	Controls

d. Local Requirements

The design team is responsible for ensuring that the project complies with local zoning standards, such as equipment screening, noise levels, etc. OSHPD does not enforce these requirements unless notified in writing by local jurisdiction. Also, refer to CAN 2-0.

3.11 Guidelines for Plumbing Drawings

a. Purpose

The purpose of the Plumbing Drawings is intended to depict all plumbing systems and components necessary to provide code required plumbing systems within the hospital.

b. Content

Based upon the complexity and scale of the project, the information provided on the Plumbing drawings should show clear description of the work required for the project. In many cases, the project may involve the documentation of existing plumbing systems and should clearly identify new versus existing systems. Some of the key components necessary on plans for all projects include:

- Identify any equipment that requires seismic certification and/or essential power.
- Identify equipment mounting detail locations.
- Identify water temperatures and high limit alarm locations.
- Provide information indicating domestic hot water distribution temperatures per CPC Chapter 6.
- Identify medical gas zone valve and alarm locations.
- Identify areas where special precaution piping is required per CAN 5-311.9.
- Identify roof drainage calculations. Verify rainfall rates with the local jurisdiction.
- Identify Domestic Water sizing criteria.
- Indicate wall ratings and location of fire/smoke dampers.
- Provide validation that existing equipment and distribution services have the necessary capacity during remodel or expansion projects.
- Provide the appropriate flexible connections where piping, etc. crosses seismic and other expansion joints.

1) Information Plans

Various types of drawings are necessary to convey essential information such as Schedules, Piping Diagrams, Mounting Details and Control Diagrams. The title page should clearly define the project location and vicinity by graphical means. The applicable building codes should be stated. A drawing index is recommended to clearly identify all the unique systems that may be involved.

2) Site Plans

If the project involves outside (exterior) plumbing work outside the normal 5’-0” from the building, then it should be clearly shown in the site plan documentation.

3) Floor Plans

It is recommended to follow the architectural floor plan nomenclature for sheet order and sheet numbering in order to simplify the logical sequence of cross-coordination with all trades (disciplines). Traditionally, the floor plans provide the documentation of the architectural features as a shaded background and the plumbing devices are prominently shown on top of these locations. However, it is important to clearly identify room names and wall ratings for OSHPD review.

4) Enlarged Drawings

The drawings that contain a significant amount of information require much more space to clearly communicate the scope of work. These drawings tend to be the ¼" scale or larger, in order to show exact placements and or intent. In addition, these drawings may comprise several elevations to demonstrate the intent.

c. Organization and Approach

The Plumbing drawings represent work that is closely coordinated with many other disciplines such as architectural, structural, electrical, and mechanical. The need to have very well coordinated drawings is equally important with all disciplines. Last minute little changes, even room name changes, from one discipline can have an adverse impact on the other disciplines and on the construction documents.

The plumbing drawings should reflect the clear scope of work and the application of separate systems on their own drawings will provide better definition of the intended work. Examples of this are as follows:

Sheet Number:	Sheet Description:
P001	Plumbing Title Sheet, Drawing Index
P002	Plumbing Schedules, Notes, Water Calculations
P100	Site Plan – Plumbing
P201	1st Floor Plan – Plumbing and Medical Gas Plans
P202	2nd Floor Plan – Plumbing and Medical Gas Plans
P301	Enlarged Floor Plans - Plumbing
P401	Piping Diagrams
P501	Details
P601	Controls

d. Local Requirements (see Mech.)

3.12 Guidelines for Electrical Drawings

a. Purpose

The purpose of Electrical Drawings is intended to depict all electrical devices and components required to provide safe, reliable electrical systems. Based upon the current trend in healthcare environments for new medical and surgical procedures that are constantly changing, a greater emphasis is needed for expandable electrical systems.

b. Content

Based upon the complexity and scale of the project, the information provided on the electrical drawings should show clear description of the work required for the project. In many cases, the

project may involve the documentation of existing electrical systems and should clearly identify new versus existing devices and equipment.

The need for modern digital communication systems will also require clear documentation of these systems as they relate to the critical systems within the facility. These systems are presently reviewed only for routing as it pertains to fire rated wall penetrations.

The title page should clearly define the project location and vicinity by graphical means. The applicable building codes should be stated. A drawing index is recommended to clearly identify all the unique systems that may be involved.

Several drawings contain essential information such as Load Calculations, One-Line Diagrams, Panel Schedules and drawing details. These documents usually follow the physical device locations placed on the floor plans.

Checklist of Key Items:

1. All electrical plans and specifications signed by the electrical engineer of record.
2. List of symbols and abbreviations used on plans and their meaning.
3. Correct electrical code version cited.
4. Room names and numbers on all plan sheets.
5. Provide wall fire ratings & legend.
6. Single line diagram of the electrical system showing normal source and segregation of the essential electrical system. Clearly identify components as normal, critical, life safety, or equipment.
7. Site plan showing service entrance, distribution system, service transformer, and generator location.
8. Drawings showing details of all switchboards, panels, and equipment.
9. Load calculations or other approved methods showing verification of load capacity for all equipment and conductors. Show effect on both normal and emergency system.
10. Panel schedules with totalized, tabulated loads. Panel schedules shall indicate rating of panel, feeder conductor, feeder overcurrent protective device, branch/system (critical, life safety, equipment) and loads served.
11. Clearly indicate the AIC ratings of all panelboards & distribution boards.
12. Schedules of ratings of equipment requiring electrical connection.
13. Schedule showing all feeders phase and ground conductors, conduit sizes, estimated lengths, and overcurrent protective devices.
14. Location and power source for all wiring devices, including receptacles, lights, switches, junction boxes, power outlets, and telephone outlets.
15. Fire alarm system. Provide specifications for equipment, show location of all devices, and show connection to life safety power source. Indicate if power limited.

16. Nurse call system. Provide specifications for equipment, show location of all devices, and show connection to power source. Indicate if power limited.
17. All equipment must be listed, labeled, or certified by a Nationally Recognized Testing Laboratory including X-ray and diagnostic equipment.

1) Site Plans

If the project involves outside (exterior) electrical work, then it should be clearly shown in the site plan documentation. Based upon the complexity of the project, the site plan should be developed into multiple documents such as:

- Site Plan – Electrical Power
- Site Plan – Lighting
- Site Plan – Low Voltage Systems

2) Floor Plans

It is recommended to follow the architectural floor plan nomenclature for sheet order and sheet numbering in order to simplify the logical sequence of cross-coordination with all trades (disciplines). Traditionally, the floor plans provide the documentation of the architectural features as a shaded background and the electrical devices are prominently shown on top of these locations.

3) Enlarged Drawings

The drawings that contain a significant amount of information require much more space to clearly communicate the scope of work. These drawings tend to be the ¼" scale or larger, in order to show exact placements and or intent. In addition, these drawings may comprise several elevations to demonstrate the intent.

c. Organization and Approach

The electrical drawings represent work that is closely coordinated with many other disciplines such as architectural, structural, mechanical, and plumbing. The need to have very well coordinated drawings is especially important with respect to mechanical and plumbing equipment. Reflected ceiling plans are another key coordination effort. Many of the design issues that arise from plan review are from non-concurrent referenced plans such as a reflected ceiling plan or mechanical plan indicating fire/smoke damper locations, for example.

Based on many experiences, the last minute little changes from one discipline cause large issues for another discipline.

d. Drawing Content

The electrical drawings should reflect the clear scope of work and the application of separate systems on their own drawings will provide better definition of the intended work. Examples of this are as follows:

Sheet Description:

- Electrical Title Sheet, Drawing Index
- Schedules, Notes, Lighting Schedules
- Site Plan – Electrical
- Site Plan – Lighting
- Site Plan – Low Voltage / Communication
- Floor Plan – Electrical
- Floor Plan – Lighting
- Floor Plan – Low Voltage Systems (Voice/Data, Nurse Call, TV)
- Floor Plan – Fire Alarm
- One Line Diagram
- Panel Schedules
- Enlarged Floor Plans – Electrical
- Details

e. Existing Conditions

Projects that occur within existing spaces require an additional level of care and planning. The need for good site investigation and documentation requires a significant level of time and costs of the design team. In many cases, the initial scope of a project may be significantly altered once the existing infrastructure is evaluated.

The emphasis should be placed on field investigations, followed by clear documentation of the existing facility restraints regarding the project.

The existing electrical and low voltage systems in most cases, must stay operational and thus significant work-around planning must be developed.

Showing much of the existing infrastructure helps to convey the true scope of work to the trades involved and minimizes future scope changes.

f. Local Requirements (see Mech.)

Tips:

- *Following CAN 2-102.6 for remodel/renovation projects is critical in order to minimize OSHPD plan check.*
- *Verify that circuits shown on the plans match the circuit descriptions in the panel schedules.*
- *Show circuiting with conductor counts for all circuit runs.*

- *Use the "Electrical Equipment for Healthcare Facilities" guideline located on OSHPD FDD website.*
- *For large projects provide panel schedule "keys" (similar to building key plans) on the panel schedule sheets.*

Appendix 3-A Recommended Graphics and Symbols for Rated Walls

General Rated Wall Graphics

The minimum designation of rated walls that should be provided on all plans, including Architectural Floor Plans, Mechanical, Plumbing, and Electrical Distribution Plans should be similar to the following:

One-Hour Rating

Two-Hour Rating

Three-Hour Rating

Four-Hour Rating

Fire Barrier Walls for Separation of Spaces such as Atriums, Suites, or Fire Partitions required for Tenant Space Separations may use a special graphic designation to distinguish its special use. Such graphics should be clearly identified in a graphic legend on the drawings.

One-Hour Separation Wall

Special Rated Wall Designations

For Fire Barrier walls which have special functions that need to be identified in plans, the following may be used:

Horizontal Exit or
Exit Passage (Two-Hour)

Smoke Partitions which enclose Elevator Lobbies and Smoke Barrier Walls which separate Smoke Compartments should be use a unique graphic:

Non-Rated Smoke Partition

One-Hour Smoke Barrier

Fire Walls (CBC 706) where separations create Separate Buildings and have limited, or no penetrations, and must be continuous from exterior wall to exterior wall should use the following graphic:

Two-Hour Fire Wall

Three-Hour Fire Wall

Four-Hour Fire Wall

Section 4

Inspector of Record Guidelines

Section 4 – Inspector of Record Guidelines

4.0 Introduction

The actions of the Inspector of Record (IOR) on a project are based on the requirements outlined in Title 24, Part 1, Chapter 7 of the California Code of Regulations (CCR).

The IOR is interviewed and approved for each project by the design professional of record as appropriate and works under the direction of the Architect of Record (AOR) and/or the Engineer of Record (EOR) (see Title 24, Part 1, Chapter 7, Section 7-145 of the CCR); is employed by the hospital governing board or authority; and is then approved for the project and monitored by OSHPD for competence and adequately ensuring compliance (see Title 24, Section 7-213 of the CCR).

When questions arise on the assigned project, the IOR should consult the design professional in responsible charge, typically the AOR and/or the EOR, the appropriate OSHPD personnel associated with the project, including but not limited to the Compliance Officer (CO), Fire Life Safety Officer (FLSO), District Structural Engineer (DSE), and if necessary, the Regional Compliance Officer (RCO).

It takes much more than simply having an OSHPD certification to be an OSHPD inspector. A Complex hospital construction project requires a knowledge-based inspector with the proper background and experience for the project to be constructed. Inspectors help make a project successful by performing their duties (CCR Part 1., T24 Section 7-145) properly and effectively without ever compromising their position. This chapter gives a general description of the duties and responsibilities, with insight to the best practices for the IOR along with an overview of the necessary working relationships required for a successful project.

4.1 Certified Hospital Inspector Code of Ethics

The Office of Statewide Health Planning and Development ("OSHPD") administers the Hospital Inspector Certification Program, approves inspectors as part of the project approval process, and is authorized to examine, certify, recertify and monitor hospital inspectors within OSHPD's jurisdiction. OSHPD promotes a high standard of professionalism in the hospital inspection industry. Certified hospital inspectors are expected to adopt and uphold this Code of Ethics ("Code").

Integrity, honesty and objectivity are the fundamental principles embodied in this Code, which sets forth the obligations of ethical conduct for each certified hospital inspector of record ("Inspector").

Tip: *Hospital Inspectors of Record should adopt and follow this Code to provide high ethical standards to safeguard the public, the profession and the state's physical healthcare infrastructure.*

1. **DUTY TO PROJECT:** Inspectors are employed by a hospital governing board or authority, approved by OSHPD and work under the direction of the architect or engineer in responsible charge for a project. Inspectors shall avoid activities that compromise, or appear to compromise, professional independence, objectivity or inspection integrity.
    a. Inspectors shall not inspect facilities under contingent arrangements whereby any compensation or future referrals are dependent on reported findings or project approvals.
    b. Inspectors shall not solicit or accept gifts, meals, tickets, discounts or other privileges from contractors, material suppliers, testing laboratories, special inspectors, design professionals, construction managers or other third parties associated with a facility subject to inspection.
    c. Inspectors shall not accept compensation, including contingent fee arrangements or referral fees, for recommending contractors, services or products to inspection clients or third parties having an interest in a facility subject to inspection.
2. **DUTY TO PUBLIC**: Inspectors shall act in good faith toward clients, OSHPD, contractors and the public generally.
    a. Inspectors shall hold paramount the safety, health and welfare of the public in the performance of their professional duties.
    b. Inspectors shall perform services only in the areas of their competence.
    c. Inspectors shall be objective in reporting and not knowingly understate or overstate the significance of reported conditions.
    d. Inspectors shall be fair, honest, impartial, and act in good faith in the performance of their professional duties.
3. **DUTY TO PROFESSION**: Inspectors shall comply with all laws and avoid activities that may harm the public, discredit themselves or reduce public confidence in the profession.
    a. Advertising, marketing and promotion of an Inspector's services or qualifications shall not be fraudulent, false, deceptive or misleading.
    b. Inspectors shall continue their professional development throughout their careers.
    c. Inspectors shall comply with all laws, regulations and certification requirements of the State of California.
    d. Inspectors shall not discriminate in any business activities on the basis of race, color, national origin, ancestry, sex, religion, age, marital status, sexual orientation or disability, and shall comply with all federal, state and local laws concerning discrimination.
    e. Inspectors shall not engage in any practices that could be damaging to or discredit the hospital inspection profession.

4.2 Knowledge

The IOR should be thoroughly familiar with the following:

- Part I, Chapter 7 of the Administrative Codes
- Policy Intent Notices (PINs) appropriate for the project
- Applicable Code Application Notices (CANs)
- Contract Document requirements
- Project schedules
- Project contracts
- Applicable codes and standards
- Approved submittals
- All instructions or clarifications issued by the design Professional of Record
- Requirements for testing and inspections
- Hospital procedures for notifications and special requirements
- Temporary barriers and egress requirements as appropriate for the project
- Infection control policies and work practices to reduce risk of exposure to infectious organisms during demolition, remodel, and construction
- The various parties involved with the project
- Emergency procedures
- Safety requirements for construction and the facility
- All of the Authorities Having Jurisdiction (AHJs) associated with the project that require involvement through the project start- up, duration, close-out, and finalization
- All associated design professionals as appropriate for the project
- The geotechnical services and special testing lab for the project and how to notify and schedule required inspections and other testing as appropriate for the project
- The inspection request processes
- Approved program flexes
- Radiology physicist report
- Medical equipment
- Engineering judgments

4.3 Principal Duties

a. Scope

The following are the duties outlined by Part 1 Chapter 7 of the administrative code and are the minimum requirements for the performance of principal duties:

b. Code Required Duties: 7-145. Continuous inspection of the work.

The general duties of the inspector shall be as follows:

1. The inspector shall have personal knowledge, obtained by continuous inspection, of all parts of the work of construction in all stages of its progress to ensure that the work is in accordance with the approved construction documents.
2. Continuous inspection means complete inspection of every part of the work. Work, such as concrete or masonry work which can be inspected only as it is placed or assembled, shall require the constant presence of the inspector. Other types of work which can be completely inspected after the work is installed may be carried on while the inspector is not present. In no case shall the inspector have or assume any duties which will prevent continuous inspection.
3. The inspector shall work under the direction of the architect or engineer in responsible charge. All inconsistencies or seeming errors in the approved construction documents shall be reported promptly to the architect or engineer in responsible charge for interpretation and instructions. In no case, however, shall the instructions of the architect or engineer in responsible charge be construed to cause work to be done which is not in conformity with the approved construction documents.
4. The inspector shall maintain a file of approved construction documents on the job at all times including all reports of tests and inspections required by the construction documents and shall immediately return any unapproved documents to the architect or engineer in responsible charge for proper action. The inspector shall also maintain on the job at all times, all codes and regulations referred to in the approved construction documents.
5. The inspector shall notify the Office:
    - When the work is started or resumed on the project.
    - At least 48 hours in advance of the time when foundation trenches will be complete, ready for footing forms.
    - At least 48 hours in advance of the first placing of concrete.
    - When work has been suspended for a period of more than two weeks.
6. The inspector(s) of record shall maintain field records of construction progress for each day or any portion of a day that they are present at the project site location. The field record shall state the time of arrival, time of departure, a summary of work in progress and noted deficiencies in the construction or deviations from the approved construction documents. This field record shall document the date, time and method of correction for any noted deficiencies or deviations. In addition, this record shall contain the following as applicable:
    - The time and date of placing concrete; time and date of removal of forms and shoring in each portion of the structure; location of defective concrete; and time, date and method of correction of defects.
    - Identification marks of welders, lists of defective welds, and manner of correction of defects and other related events.
    - A list of test reports of all nonconforming materials or defective workmanship and shall indicate the corrective actions taken.

- When driven piles are used for foundations, the location, length and penetration under the last ten blows for each pile. It shall also include a description of the characteristics of the pile driving equipment.

7. All field records of construction progress shall be retained on the job until the completion of the work and shall, upon request, be made available to the Office, the architect or engineer in responsible charge and the owner. Upon completion of the project, these original field records shall be submitted to the hospital governing board or authority.
8. The inspector shall notify the contractor, in writing, of any deviations from the approved construction documents or new construction not in compliance with the California Building Standards Code, which have not been immediately corrected by the contractor. Copies of such notice shall be forwarded immediately to the architect or engineer in responsible charge, owner and to the Office.
9. The IOR shall submit verified compliance reports (Form OSH-FD-123) as stated in the approved TIO Program. Note that a verified compliance report must always be submitted at the completion of the work. The IOR as well as the AOR or EOR should monitor the status of all post approval items and confirm compliance of approved construction changes in the field. The IOR is required to have approved documents at hand. Inspectors shall base their inspections on OSHPD approved construction documents. Shop drawings are generally not part of the OSHPD approved construction documents and shall not be used as a basis for inspection unless they correspond exactly with OSHPD approved construction documents or have been submitted to and approved by OSHPD as part of the construction documents.
10. The IOR should verify that all shop drawings, samples, and other submittals meet the Contract Documents requirements and are approved by the appropriate design professional before incorporation into the work. Responsibility shall rest with the AOR.

4.4 Documentation and Processing "Materially Alter" Items

The California Administrative Code, Chapter 7, defines "Materially Alter" (as applied to construction projects or approved construction documents) as any change, alteration or modification, as determined by OSHPD, that alters the scope of a project, causes the project to be in noncompliance with the California Building Standards Code, or causes an unreasonable risk to the health and safety of patients, staff or the public. Only changes that materially alter the work shall be submitted to OSHPD as an Amended Construction Document for review and approval.

Code Application Notice 2-107.4 defines the types of changes to the approved construction documents that do not materially alter the work during construction and therefore are not subject to OSHPD review. The IOR's record set of approved documents is utilized to monitor, record, and provide for OSHPD observation of items that qualify as "does not materially alter" the work. The design professional shall determine what qualifies and what does not. A Request for Information (RFI) form is normally used to initiate the determination. A suggested process included in the RFI would be a checkbox area that indicates:

- No amended construction document required
- Amended construction document required
- Does not materially alter work

A separate log should be maintained showing all items approved by the design professional as materially altering. A simple log showing sequential numbering, RFI number, item description, and a block showing it was posted would be effective.

The record set should indicate areas that qualify as a "does not materially alter" item, by clouding the area, adding the abbreviation DNMA, the log number, and RFI number.

4.5 Additional Duties

There are numerous other duties that can fall under the IOR's purview. This section outlines those that may be included as appropriate.

a. Chronological Record

Keep a chronological record of the following:

- All inspections performed, including special inspections, geotechnical inspections, those done by system certifiers, verifications, observations by design professionals, project walkthroughs, and all project-related inspections; violations noted and how notifications were presented:
    - When notifying the contractor of noncomplying work use reasonable judgment and verbal notification when appropriate; when the contractor does not take immediate and appropriate action the IOR must comply with Title 24, Part 1, Chapter 7, Section 7-145(b) of the CBSC.
- Always document when and how notifications have been given (even when initial verbal notification has been given).
- All requests and notifications for the following:
    - clarifications
    - interpretations
    - Amended Construction Documents
    - Deferred Approval Documents
    - Inspection requests
    - Noncomplying work
    - Notifications given to the contractor
    - Discussions and agreements made, comments made by AHJs and/or needed corrections, memos of concerns, and inquiries to the AOR for document interpretations
    - Incidents affecting the hospital systems or accidents related to the project
    - Schedule impacts
    - Workforce

    - Weather
    - Any deficiencies in materials and installations
    - Any direction given by the AOR and associated design professionals
    - All photos taken for progress identification and problem documentation
- Log and record areas that by definition of "not materially alter" have added or modified the drawing and/or specifications for OSHPD review upon visits.
- Log and record the areas where Standard Details have been incorporated for OSHPD review upon visits – refer to PIN 51.
- Provide courtesy notices to the contractor, design professionals concerned of deficiencies observed prior to requests for inspections being requested.
- The IOR may serve as a special inspector when approved in the TIO Program. (See Section 5 of this volume for additional information on special inspections.) The IOR is responsible for assuring that all areas requiring special inspections are inspected and accepted by special inspectors. The IOR shall maintain on the job a file containing daily field reports for all special inspections.

b. Plans and Specifications

The IOR should have in his or her possession the following to safeguard the public by verifying that the hospital building(s) is constructed in accordance with the approved documents:

- approved drawings and specifications
- all documents relating to changes, amended documents, deferred submittals, and Requests for Information (RFIs) for clarification of construction documents
- the related building codes and standards as indicated by CAN 1 and the approved documents

The IOR shall maintain a record set of the approved documents:

- The record set shall be a true representative of the work in place.
- Realize that approved shop drawings are not Contract Documents. They serve to clarify or show more detail, but the approved drawings and specifications prevail if there is a conflict.
- Deferred submittals require additional monitoring by the IOR for approval from OSHPD and incorporation into the approved documents.
- Project specifications are maintained and must be updated with the changes that occur to the same extent that the drawings are updated through clarifications, and RFIs.
- The record set should reflect areas that by definition of "not materially alter" have added or modified the drawing.
- The record set should reflect the areas where Standard Details have been incorporated.

c. Files, Records, and Reports

The IOR shall maintain files for the project as outlined in Title 24, Part 1, Chapter 7, Section 7-145 of the CBSC and the following:

- Deferred submittals
- All inspections performed
- Inspection requests and logs
- Special inspection reports
- Certifications of all special inspectors used for the project
- All project-related meetings
- Daily reports from the inspection group
- Test results from materials and certification of materials
- Approved concrete mix designs
- Welding procedures
- All reports and documentation given by AHJs
- All noncompliance notices issued and related notifications and communications that have had an impact on the documents' progress
- Digital image or photos taken of the project
- All OSHPD field staff reports
- The IOR shall compile and maintain the verified compliance reports submitted by the special inspector(s) for the work performed

4.6 Inspections and Types of Inspections Provided by the IOR

There are three types of inspections provided by the IOR:

- Continuous inspections as outlined earlier in Principal Duties
- Inspections completed by the use of inspection requests
- Required inspections listed with the TIO Program as outlined by Title 24, Part 1, Chapter 7, Section 7-141 of the CBSC

OSHPD should only allow the IOR to inspect the project consistent with what is provided in the permit documents. Construction and inspections should be limited to what has been permitted. If the project has a permit, then this indicates that there is adequate information contained in the documents to inspect. It is not the IOR's responsibility to interpret code, but to verify installations meet code requirements that are part of the approved documents. The IOR should inspect what is installed and either confirms that it meets the requirements indicated in the permit documents or notes the deficiencies and deviations not in compliance with the California Building Standards Code in a daily report, inspection request, and/or courtesy notice provided to the architect, owner, and contractor in writing as outlined by code. In this regard the IOR should:

- Communicate with the contractor to ensure understanding of the Contract Documents.

- Request manufacturer's literature or printed instructions if referenced and in doubt.
- Observe that the testing laboratory performs all tests and inspections required.
- Review test results and notify the contractor and architect of observed deficiencies.
- Consider suggestions or recommendations made by the contractor and refer them to the architect.
- Accompany the architect's consultants when observing or inspecting the work. Record and report conditions that may cause a delay in completion of the work.

The IOR should never authorize deviations from the Contract Documents nor should an IOR interfere with the work being performed by the contractor nor assume any responsibility for the performance of the contractor's work. It is not the role of the IOR to advise or issue directions relative to any aspect of construction means, methods, techniques, sequences, or procedures.

a. Inspection Requests

The inspection request is one of the few important tools an IOR has for documenting, tracking, organizing, verifying, and maintaining accountability and provability of inspections conducted on an OSHPD project. CAC 7-145(a)1 requires the IOR to have personal knowledge of all parts of the work.

Inspections are utilized for the following:

- As outlined in the TIO
- For all work needing inspections so that the IOR knows where the contractor is working
- For utility shutdowns
- For AHJ requests

b. Starting the Inspection Request Program

1. Begin instruction of the request program at the first preconstruction meeting.
2. Have a one-on-one meeting with the project contractor and let him or her know what you expect and need.
3. At each pre-installation meeting review how the inspection request is initiated and what is required to initiate it.
4. Review with the contractor's project manager how and when the inspection requests are to be turned in.
5. Be consistent in inspection. Enforce the following policy: Insist that all work require an inspection by the approved inspector and or special inspector prior to covering the work.

c. Rejecting Inspection Requests

Inspection requests can be rejected when appropriate. It is a mistake for the IOR to consider an inspection request when the work is not complete or has not been started. If the work is not ready for inspection the IOR should reject that inspection request. If only a portion of the work is ready for inspection the IOR should not give a partial approval. The request should be rejected

and the IOR should ask the contractor to submit a new one when the completed work is ready for inspection.

The IOR should be familiar with the inspection request form. On the form, signatures are required by the contractor and the subcontractor requesting the inspection. By signing the form these individuals have indicated that they have verified that the work is complete and in compliance with plans, specifications, and building code requirements and is ready for inspection. There must be strict accountability and so the IOR must be diligent in the inspection process. This diligence also plays a key role in any potential litigation or arbitration. The inspection request log indicates the time frame in which inspections are done and is used often by the contractor in arbitration.

Tip: *The contractor will properly present inspection requests to the IOR provided the IOR is consistent in implementing the system.*

d. Logging Inspection Requests

1. When an inspection request is received, it should be date- stamped and initialed by the IOR.
2. The IOR keeps the original inspection request in a binder with a log showing the request, date received, date inspection requested, date executed, trade requesting, and approval or rejection. After updating the log, the IOR should make a copy and post it outside the IOR's or contractor's office for subcontractors and contractors to view.
3. After completing the inspection and filling out the form, the IOR makes a copy of the original and places it in the outgoing mail. If an inspection is rejected, a copy of the rejection should be given to the contractor in person or by fax. The original is retained by the IOR in the binder.

4.7 Other Project-Related Duties

Other duties of the IOR include the following:

- Attend preconstruction meetings.
- Attend various meetings as required.
- Effectively communicate with contractor, OSHPD, the Structural Engineer of Record (SEOR), the AOR, and owners.
- Keep in contact with the AHJs and notify them about all phases of the work and meetings that may require their presence at the site. Keep ahead of the work being performed so as to anticipate required inspections that might tend to interfere with the progress of the construction.
- Do not assume responsibility for any safety procedures. If hazards are observed, report conditions to the contractor.
- Do not stop the work. The IOR is not a safety engineer or a safety inspector. Job-site safety measures and procedures are the sole responsibility of the contractor and are normally so specified in the Contract Documents. Many safety aspects of a project under

construction involve the adequacy of shoring in trenches or scaffolding or false work, which cannot be easily determined without an engineering analysis of size and placement of support members. The IOR should find out who the contractor has designated as its site safety engineer or representative-in-charge of site safety. Also, the IOR should determine who is second in charge in case the contractor's safety representative is absent. These individuals are responsible for maintaining safe conditions at the job site for the workers, authorized visitors, and others who have a right to be on site, including the architect, consultants, AHJs, and the IOR.

4.8 Checklists

Many books written on the subject of project inspection and administration of inspections include checklists. One such book is the Construction Inspection Manual. Many checklists have been developed. As discussed in Section 5 of this volume, the TIO Program is a basic checklist of tests, inspections, and observation requirements. It is described in Title 24, Part 1, Chapter 7, Section 7-141 and illustrated by example and instruction in CAN 1-7-141(d)–(i). The TIO Program can be used as a guide for testing requirements and special inspections.

The most complete checklist of what needs to be verified and inspected would be the approved documents and the information contained therein. The building codes and standards are also applicable.

OSHPD has available a standard fire and life safety checklist and other checklist on their Website and comprehensive checklists can be purchased from a variety of sources. Specific checklists are not provided here because of the numerous items needed to be comprehensive and because the checklist would vary from project to project.

4.9 Coordination Concerns

Coordinating the work is usually the responsibility of the contractor. However, successful coordination requires all parties to communicate with each other so that construction can proceed in an orderly manner. Although verbal communication is used extensively, scheduling and legal procedures required during construction are best served by written correspondence, with proper distribution of copies to all concerned parties including the owner's representative.

In addition to work coordination, various notifications and compliance with hospital facility in-house requirements must be met. These notices and compliances should be approved by the owner's representative. Because lives are at stake in the hospital, procedures for notifications, barriers, infection control, and life and safety issues concerning the hospital need to be communicated to all parties of the construction group, AHJs, AOR, EOR, etc. The best times to review these issues are during preconstruction meetings. These should be held prior to every phase of construction or when a new group begins construction.

The IOR needs to have continuous knowledge of the construction progress and schedule and should be aware of how the work affects the operations of the hospital. Though the IOR may not be directly responsible for the execution of notifications and infection control practices, he or she should be aware when procedures are not followed or forgotten and notify the appropriate personnel.

4.10 Preconstruction Meetings

A preconstruction meeting can be a powerful tool and help prevent much of the conflict that could develop in the field. The following individuals should attend the preconstruction meeting:

- General contractor
- Contractor (who exerts minimum, direct control and coordination of the subcontractor)
- Project manager (who understands the contractual obligations of his or her subcontractors)
- Project engineer (who understands the need and status of all submittals)
- Project secretary (who records meeting attendees and provides meeting minutes)
- Subcontractor (at least the foreman, project manager, or other representative)
- Manufacturers' representatives (who can provide information and guidelines)
- Architect and engineer in responsible charge (when appropriate)
- Hospital staff of affected areas (when appropriate)
- OSHPD personnel (who can advise on OSHPD's expectations)
- Project IOR (or all IORs if there are more than one)
- Special inspector (if needed or required)
- Consultants (when needed)
- Facilities maintenance representatives (who normally will be invited to the preconstruction walk-through if there are areas of the hospital that may be affected)
- Infection control and safety officers

The advantage of having the preconstruction meeting is that all of the key players will be in attendance and thus everyone will be apprised of their individual accountability. The IOR can provide advice on potential problems, OSHPD-required procedures, and the minimum requirements to satisfy code, approved documents, hospital procedural considerations, infection control enforcement, life and safety issues, and inspection procedures. Title 24, Part 1, Chapter 7 is very clear about the need for approved documents prior to commencing work. Some projects will refer to a preconstruction meeting as a pre-installation meeting. Some project specifications may lack direction in defining when meetings are required, who will attend, and how it will be conducted.

a. Preparation for the Preconstruction Meeting

Above all else, the IOR should be prepared. The IOR should have all information received from the owner and architect available and needs to review this prior to the meeting. This information should include:

- Approved drawings
- Project specifications
- Project schedule
- A copy of an inspection request. The IOR should be familiar with the project schedule and the actual work taking place. If advanced notice of the preconstruction meeting is given at the owners meeting, it then becomes part of the meeting minutes and will be carried forward until the preconstruction meeting takes place.

b. During the Meeting

Meetings are usually run by the AOR, the EOR, the POR, or the general contractor. Participation by other contractors and subcontractors will vary based on their level of preparation and experience. During the pre-construction meeting the general contractor should be able to give assurances regarding personnel and materials to complete the work.

The OSHPD field staff may do the following:

- Request the design professional of record (DPOR) establish and define lines of communication among subcontractors, contractors, design professionals, the IOR, and OSHPD field staff.
- Identify and review the requirements of the Hospital Seismic Safety Act of 1983 and Title 24, Part 1, Chapter 7 of the CCR.
- Summarize the overall duties, observation, and coordination functions of the AOR or SEOR as required by Title 24, Part 1, Chapter 7 of the CCR, including preparation of Amended Construction Documents and verified reports, site visits to verify work, and certification and submittals to OSHPD.
- Summarize the overall duties of the IOR, reporting relationships, and the IOR's responsibility to verify compliance with the plans, specifications, and applicable codes.
- Discuss required coordinated review of the project by OSHPD representatives (CO, FLSO, and DSE).
- Identify specific and/or unusual code and project requirements.
- Explain code requirements for shop drawings, submittal, review, and approval. Outline procedures for meeting the requirements and how submittals will impact project schedule.
- Explain the procedures and requirements for approving Amended Construction Documents. Review the approved TIO Program.
- Discuss the schedule for submittal of deferred approval items to avoid delays in construction.
- Request scheduling requests from owners and contact information for the hospital representative.

The IOR should do the following:

- Ask how the contractors intend to accomplish the work and allow them to walk you through the construction process.
- Review the specifications. Frequently the subcontractor is unaware of the unique requirements of the project and may not have reviewed the specifications.
- Give a copy of the inspection request to all parties and reasons for the correction by providing the applicable code, standard, specification section and the appropriate reference to the approved drawing, and how the IOR will notify the contractor and what the notification requirements are. It is important to stipulate the quality standards expected so that all responsible parties will adhere to the approved documents.
- Review the TIO Program requirements.
- Review the noncompliance procedures.
- Review what the IOR wants to see and at what stage the IOR must perform inspections.
- Discuss material inspection upon arrival at the project.
- Ensure that contractors and subcontractors understand how facilities are coordinated through the IOR and the project manager.
- Make it clear to the contractor that the IOR is not responsible for reviewing the adequacy of the contractor's safety program.
- If OSHPD field representatives are not present, describe AHJ involvement and review the requirements and procedures with contractors and subcontractors in the permitted documents and specifically the Testing Inspection and Observation Program.

The preconstruction meeting is an opportune time to bring up fire stopping of penetrations and to inform the contractor that all penetrations will have to be completed per a listed testing agency such as Underwriters Laboratories (UL). Engineering judgments should only be used in extreme cases. Bringing such issues to the contractor's attention early should mitigate potential problems.

Note if and what specifications were reviewed, who attended, and, in general, what was covered. For example, the contractor and/or subcontractor needs to be aware of any special requirements, inspection requirements, OSHPD notifications, testing requirements, infection control requirements, notification requirements, shutdown procedures, submittal requirements, material samples, special requirements for phased construction, etc.

4.11 OSHPD Interaction

The IOR acts under the direction of the AOR and/or EOR. He or she represents the eyes and ears for various parties including the architect, structural engineer, AHJs, owners, and owners' representatives.

It is important that the IOR prepare documentation representing the various inspections conducted on an OSHPD project to give evidence of compliance and that inspections are conducted continuously. This allows the CO, DSE, FLSO, and RCO to observe the inspection process and to be assured that adequate and competent inspection is provided.

OSHPD staff members ensure that inspections are adequately and competently conducted and documented on the hospital project. It is not the responsibility of OSHPD to provide the inspections.

The IOR should be able to show an OSHPD representative the approved documents and the maintained record documents showing approved changes and a true representation of the project. The IOR should be able to show how inspections have been organized, discuss project progress, and describe any problems being faced in the field.

Normally the IOR will perform a walk-through of the project with the OSHPD representative. If the OSHPD representative has any concerns at that time, the inspector shall note it and ensure that the appropriate parties are notified via a copy of the OSHPD field staff report. The responsibility for inspection resides with the project inspector; OSHPD only observes that the process is working and that adequate and competent inspection is provided.

OSHPD representatives are also a valuable resource for the project inspector since they have a wealth of first-hand information regarding hospital construction practices and therefore, should be consulted as needed. OSHPD representatives encounter many problems as they visit various projects and could assist in preventing mistakes and advising the IOR. The IOR should use OSHPD visits to take advantage of the advice provided by its representatives.

Tip: *The project inspector shall contact the various OSHPD representatives for special reviews of work and needed visits.*

4.12 Concluding Remarks

An IOR needs to have good communication skills to minimize misunderstandings. By being consistent and providing organized documentation, an IOR can assist in keeping a project on schedule. There are no skills, however, that can replace a well-produced set of approved documents and a contractor willing to comply with them. But with foresight and a thorough understanding of the process, an IOR can pace the project, complete timely inspections, and provide notifications and documentation that will keep a project moving and ensure that it complies with the approved documents, making for a smoother close-out process.

Section 5

Testing, Inspection and Observation Guidelines

Section 5 - Testing, Inspection and Observation Guidelines

5.0 Introduction

The Hospital Building Safety Board (HBSB), in cooperation with the Office of Statewide Health Planning and Development (OSHPD), has set out to update these Guidelines for the design, quality control, and construction of hospitals in the State. Although a TIO Program is required by code for all hospital building projects in California, the use and application of this recommended Guide is voluntary. It is intended to be a guideline used by design and construction professionals involved in new and remodel hospital building projects in California, and are based on the provisions of the 2010 California Code of Regulations, Title 24, 7-141.

5.1 Purpose

The purpose of these guidelines is:

- To increase collaboration, accountability, and cooperation among those design and constructions personnel responsible for new and remodel construction in California hospitals.
- To provide assistance for the efficient development and implementation of the state-required Test, Inspection and Observation Program (TIO Program).
- To clarify the roles and responsibilities of the parties involved with the design, inspections, testing, construction, and approval of hospital building projects in California.
- To better define the testing, inspection and observation requirements and the sequential milestones associated with projects through the course of the project development.

5.2 Maintenance and Administration

A TIO Program must be submitted with every plan review application, and an essential element of its successful implementation is the ongoing effort by the project team through the construction process. It is particularly important for the Design Professional of Record (DPOR) to keep all aspects of the OSHPD-approved program current with evolving project conditions. Although these conditions will generally include tests, inspections, and milestones, they will almost certainly include information on responsible personnel as the project team members become known or as they change over the course of the project. The TIO is not a rarely referenced static program; rather, it constitutes a dynamic document that the entire project team must regularly reference as a benchmark for ongoing quality assurance.

5.3 Format

Although OSHPD has developed and published TIO documents and forms that are available to the public on the OSHPD Website, these documents were designed to be used as tools or guides only. Hospitals with particular projects working with unique groups of companies and individuals will almost certainly benefit by customizing TIO Programs by creating hospital-specific templates to best suit the conditions. Because of the repetitive nature of much of the information included in the TIO Program, particularly when the project team does not change dramatically from project to project, TIO Programs that are developed around the specific hospitals for which they apply offer a more user-friendly approach than those that have been based on the Projects, Design Professionals, or OSHPD. Regardless of the preferred format, all TIO Programs should be created by Design Professionals who are thinking critically about the work scope and how to best preserve design intent and maintain construction quality.

5.4 Instruments

Traditionally the Design Professionals of Record create and maintain TIO Programs using the standard OSHPD Forms. Although this is acceptable, it may not reflect the best approach to the State's requirements because of the concentrated involvement that is required for the ongoing TIO Program implementation over the course of the project. Depending on the size and nature of the construction projects, alternate means for developing and maintaining the integrity of the construction quality may offer better solutions for achieving the objectives of the TIO Program requirements. The IOR should manage the activities that keep the TIO Program current in the field in coordination with and on behalf of the DPOR.

5.5 Contract Drawings

Although including the TIO Program within the sheets of the OSHPD- approved and large-format construction drawings is possible, this approach is cumbersome to maintain. Personnel, firms, tests, inspections, and milestones are dynamic because of the nature of the project. Keeping the TIO Program documentation current with dynamic conditions by changing the information on large-format construction drawings may be time consuming and does not serve the project progress. Rather, a stand- alone 8 ½ x 11 document that is approved separately from the rest of the project and can easily be transmitted to others on the team may offer a more manageable approach. Revisions to the approved TIO Program that do not change the intent of the original approved plans, specifications and / or code required tests or inspections do not constitute a Material Alteration as defined in the California Administrative Code (CAC), Section 7-111 and are not required to be submitted to OSHPD for review and approval as noted in (CAC), Section 7-153 but do require concurrence of the appropriate OSHPD field staff.

5.6 Instructions

Within the first pages of the TIO Program should be "Instructions" to the project personnel for the proper implementation of the Program. Along with clarifying the expectations for its use, the "Instructions" should clearly define the responsibilities of the project participants as they relate to the TIO Program. Instructions are optional. Although the forms OSH-FD-303A and OSH-FD-303S1 that are posted to the OSHPD Website are acceptable instruments to use for the TIO Program development, they do not include Instructions.

EXAMPLE 1:

TESTING, INSPECTION, AND OBSERVATION PROGRAM (TIO)

INSTRUCTIONS:

- The TIO Program is a part of the OSHPD approved construction documents.
- The "Professional of Record" is responsible for the development and administration of a project specific TIO program.
- The "Professional of Record" shall coordinate with all design professionals assigned to the project to establish the scope of the testing and inspections.
- The "Professional of Record" in coordination with the "Inspector of Record" (IOR) shall be responsible for the distribution and gathering of all required "Verified Compliance Reports" and "Test and Inspection Forms."
- A copy of the approved TIO form will be distributed upon issuance of the OSHPD Building Permit.
- A copy should be kept with the approved plans at the job site throughout construction.
- A copy of the TIO program shall be maintained at the project site by the Inspector of Record (IOR) and serve as a "job card" throughout the course of construction.
- Certifications of all special inspectors, owner provided third party certifiers, and manufacture required certified technicians are required to be collected by the IOR.
- They will be reviewed and approved by the IOR and OSHPD field staff and will be forwarded to the OSHPD Office by the IOR in accordance with Title 24, Part 1, Section 7-155(d) and Section 7-145(a).
- All design professionals, the general contractor and the project inspector of record must submit Verified Compliance Reports (VCRs) at the progress milestones (or intervals) identified in this TIO program.
- When the field conditions disclose the need for additional tests, special inspections, and/or observations, the TIO program may be amended by the "Professional of Record."
- The new amended TIO must be submitted to the office if there are "Material Alterations" to the approved plans, specifications, and/or code required tests or inspections.
- When an "Amended Construction Document" revises the scope of a project and additional tests are required, a revised TIO program will be submitted to OSHPD for review and approval.
- After the tests and inspections identified on the Approved TIO form are completed, verified and accepted, it shall be submitted to "Professional of Record" and will become part of the required project closure documentation.

EXAMPLE 2:

TESTING, INSPECTION, AND OBSERVATION PROGRAM (TIO)

INSTRUCTION

The TIO Program is a part of the OSHPD approved construction documents. The "Professional of Record" is responsible for the development and administration of a project specific TIO program. This includes the identification of individuals and companies performing the required tests, inspections and observations. The "Professional of Record" shall coordinate with all design professionals assigned to the project to establish the scope of the testing and inspections. They shall coordinate with the owner, OSHPD field staff, and the entire design team to identify the critical milestones of progress to verify construction compliance. The "Professional of Record" shall be responsible for the distribution and gathering of all required "Verified Compliance Reports" and "Test and Inspection Forms."

A copy of the approved TIO form will be distributed when the building permit and IOR application have been approved by OSHPD. A copy should be kept with the approved plans at the job site throughout construction. The original approved document will be maintained in the OSHPD office files. The OSHPD staff will initial the "Construction Acceptance" box in the approved TIO program as the work is completed and accepted. A copy of the TIO program shall be maintained at the project site by the Inspector of Record (IOR) and serves as a "job card" throughout the course of construction.

Certifications of all special inspectors, owner provided third party certifiers, and manufacture required certified technicians are required to be collected by the IOR. Once they have been collected, they become part of the project file. They will be reviewed and approved by the IOR and OSHPD field staff and will be forwarded to the OSHPD Office by the IOR in accordance with Title 24, Part 1, Section 7-155(d).

All design professionals, the general contractor and the project inspector of record must submit Verified Compliance Reports (VCRs) at the progress milestones (or intervals) identified in this TIO program. Furthermore, each Special Inspector of (when acceptable to the office) an officer of the firm employing the Special Inspector(s) must submit "test and Special Inspection" documents to the IOR and the "Professional of Record."

The firms and individuals assigned to perform the tests and special inspections may not be fully identified in the program. In cases where not all names have been included in the TIO program, the building permit and TIO program can be approved by OSHPD with comments. Once the firms and individuals performing the tests and special inspections are identified, a revised TIO form must be submitted for field review and approval by the appropriate OSHPD field staff. OSHPD Field Staff will issue a Construction Advisory Report indicating the approval of the TIO program.

When the field conditions disclose the need for additional tests, special inspections, and/or inspections, the TIO program may be amended by the "Professional of Record." The new amended TIO must be submitted to the office. When a change order revises the scope of a project and additional tests are required, a revised TIO program will be submitted with the change order by the Design "Professional of Record."

After the Approved TIO form is initialed by the IOR and OSHPD staff, it shall be submitted to the "Professional of Record" and will become part of the required project closure documentation.

5.7 Responsible Personnel

Successful projects include a full complement of required personnel whom are fully engaged in the process and communicate often and deliberately regarding the various TIO issues. Included within this group are Owners, Design Professionals, Inspectors, OSHPD Staff, and Contractors. Each of these participants and their contact information should be clearly presented in a Directory on the TIO Program. A Directory is optional. Although the forms OSH-FD-303A and OSH-FD- 303S1 that are posted to the OSHPD Website are acceptable instruments to use for the TIO Program development, they do not include a Directory of TIO participants.

Relative to the TIO Program, each must be responsible for certain aspects of the quality assurance and controls as follows:

EXAMPLE:

St Elsewhere Memorial

Sample Project: HS- 999999

DIRECTORY **Section A**

Role	Name	Registration	Company
POR Professional of Record	**POR Sample**	55555	**PORs R US** Porview Rd, Porterville, Ca 33333 ph 222-333-4444 fax 555-666-7777 por@tio.com
OB Owner Builder	**Hospital Sample**	11111	**St Elsewhere Memorial Hospital** 111 Elsewhere Ave, Elsinor, Ca ph 111-222-3333 fax 333-444-5555 hos@tio.com
CO OSHPD Compliance Officer	**OSHPD CO**	55555	**OSHPD - SAC** 400 R Street, Ste 200, Sacramento, Ca 95811 ph 916-440-8300 fax 916-324-9188
DSE OSHPD District Structural	**OSHPD DSE**	55555	**OSHPD - SAC** 400 R Street, Ste 200, Sacramento, Ca 95811 ph 916-440-8300 fax 916-324-9188
FLS OSHPD Fire and Life Safety	**OSHPD FLSO**	55555	**OSHPD - SAC** 400 R Street, Ste 200, Sacramento, Ca 95811 ph 916-440-8300 fax 916-324-9188
IOR Inspector of Record	**Joe Ior**	A-9999	**IORs R US** 999 Inspection Rd, Quality City,Ca 91001 ph 999-999-9999 fax 999-888-8888 ior@tio.com
SI Special Inspector	**Joe Lab**	1234	**LABS R US** Laboratory Lane, Testing City, Ca 91101 ph 999-777-1111 fax 222-333-5555 labrie@tioteamline.com

a. Owner

The Owner is responsible for funding the TIO Program. He or she is responsible for the general oversight of the project progress and performance of all others associated with the development and implementation of the TIO Program. If the project does not require the service of a Design Professional of Record, the program should be prepared and submitted by the applicant.

b. OSHPD Staff

The OSHPD staff is responsible for the review and approval of the TIO Program. During construction they are responsible for the acceptance of the performance of the inspection personnel. Furthermore, they are responsible for the acceptability of tests and inspections as verified by the Inspector of Record (IOR) and reported in Verified Compliance Reports.

c. Design Professional of Record

The Design Professional of Record (DPOR) should be responsible for the development and ongoing administration of project specific TIO programs. This includes the identification of individuals and companies performing the required tests, inspections and observations. He or she should coordinate with all design professionals assigned to the project and the IOR to establish the scope of the testing and inspections and determine which (if any) of the tests, inspections and milestones must be observed by the OSHPD field staff. He or she should coordinate with the owner, OSHPD staff, IOR and the entire design team to identify the critical milestones of progress to verify construction compliance. Furthermore, he or she should be responsible for the distribution and gathering of all required "Verified Compliance Reports" and "Test and Special Inspection Forms."

d. Inspector of Record

The DPOR, in coordination with the IOR, is responsible for the overall quality assurance of the project. The IOR is responsible for coordinating, reporting, and validating the work done by the testing laboratory, owner provided third party testing and special inspectors and for gathering, maintaining, and validating related test and inspection documentation. Such documentation should include credentials of special inspectors, collection of OSHPD "Test and Special Inspection" forms, and distribution of OSHPD Staff field reports to the Owner, Contractor, and the Design Professional of Record. The IOR is responsible for validating and reporting on the installed work performed by the contractor. He or she is further responsible to submit "Verified Compliance" reports to the DPOR predefined progress "Milestones" as prescribed on the OSHPD approved TIO Program and he or she is responsible to keeping records relative to the status of "sign off" by those responsible to perform, verify, and accept the prescribed tests and inspections during construction. As out lined in the TIO the IOR will perform all the inspections and testing as identified on the TIO which identify the IOR as the responsible party for the designated inspections.

e. Contractors

The contractor is responsible for control of construction means, methods, techniques, sequences and procedures, for providing a safe place to work, for constructing the project in accordance with the OSHPD approved Construction Documents; and for controlling the quality of construction. The contractor is also responsible for providing safe access to those elements that require tests and inspections by inspectors, OSHPD staff, design professionals, and the owner. He or she is further responsible for submitting verified compliance reports to the Design Professional of Record at the predefined progress milestones as prescribed on the OSHPD-approved TIO Program.

f. Special Inspectors

The Special Inspectors are generally employed by the Testing Laboratory. They have qualifications and certifications that demonstrate experience with particular types of construction in which they are certified. They must be explicitly identified in the TIO Program and are responsible for special inspections and related documentation as prescribed in the OSHPD approved TIO Program.

g. Design Professional

The design professionals are responsible to identify and coordinate with the DPOR in general responsible charge for all of the necessary testing and inspections within their respective design discipline. They are further responsible for conducting field visits to observe and report on conditions relative to their design specifications. Each design professional is responsible for submitting a “Verified Compliance” report to Professional of Record at the predefined progress “milestones” and / or intervals prescribed on the OSHPD approved TIO Program.

5.8 Tests

The TIO Program should clearly identify the required building elements and systems to be tested for the entire project scope. Each test should be properly named and referenced to the pertinent code and / or guideline. It should present a brief description of the test requirements and the discipline of construction to which it applies. The TIO Program should identify the progress status and persons responsible to perform the tests, verification that the tests were conducted in conformance with building code standards, and the acceptability of the tests results.

5.9 Inspections

The TIO Program should clearly identify the required building construction processes that require special inspection. Each inspection should be properly named and referenced to the pertinent code and / or guideline. It should present a brief description of the inspection requirements and the discipline of construction to which it applies. The TIO Program should identify inspection progress status and persons responsible to perform the inspections, verify that the inspections are conducted in conformance with building code standards, and the acceptability of the special inspection process.

5.10 Milestones and Intervals

The TIO Program should clearly identify all required progress "Milestones" and / or "Intervals" throughout the duration of the construction. Each should be properly named and sequentially numbered. Each should include a brief description of the relevant elements of construction that are to be completed within it. Although the TIO Program must identify the progress status and participants responsible to submit "Verified Compliance Reports" at each of these progress steps, it is left to the discretion of the DPOR whether or not assigning expected dates for reaching such "Milestones" is beneficial.

5.11 Samples

TIO Programs that include samples of tests, inspections, observation reports, certifications, and other related documents can often further clarify the expectations for compliance with the requirements for TIO Programs.

5.12 TIO Modifications

It should be clearly identifiable that the design professional has modified the document. This could be accomplished by a summary letter describing the changes and the reason by the appropriate design professional / AOR along with a dated revision of the TIO and the delta number. This is then initialed by the appropriate OSHPD representative (Compliance Officer, FLSO, District Structural Engineer) as having been field approved for the modification. It is not uncommon for the IOR to review this with OSHPD during the field visit. Typically, no further documents will be required of OSHPD for the process of changing the TIO.

5.13 Approval

The TIO Program should include an "Approval Page" that clearly documents the certification by the DPOR and the approval by OSHPD. It should identify all relevant codes and any clarification notes that will clarify its application.

5.14 Conclusion

Regardless of the specific approach used to develop and maintain TIO Programs, strong leadership of the team throughout the process is of paramount importance. Leadership by the DPOR must include open communication and persistent monitoring of the TIO progress. Project quality can best be assured by teams of design, construction, and inspection professionals committed to excellence through critical thinking that is properly applied to specific conditions of the project for which they apply.

Section 6

Guidelines for Working with OSHPD Facilities Development Division Field Staff

Section 6 - Guidelines for Working with OSHPD Facilities Development Division Field Staff

6.0 Introduction

After the plans and specifications for a hospital project have been approved and the building permit and approval of the Inspector of Record has been issued, OSHPD's responsibility passes to the OSHPD FDD field staff. As noted in the Section 1 of this volume, the Field Observation group comprises a Regional Compliance Officer (RCO), Compliance Officers (COs), District Structural Engineers (DSEs), and the Fire and Life Safety Officers (FLSOs). This chapter presents a description of their duties and offers suggestions on how to develop an efficient and professional working relationship that will maximize the effectiveness of the construction process from a regulatory perspective.

The regulatory requirements and authority are specified in the Building Standards Administrative Code (Part 1, Title 24, CCR), Administrative Regulations for the Office of Statewide Health Planning and Development, Chapter 7, Safety Standards for Health Facilities.

OSHPD FDD field staff is responsible for ensuring that hospital buildings are constructed per the approved plans and specifications. OSHPD FDD shall make such observations that in its judgment are necessary or proper for the enforcement of the regulations and all applicable parts of the California Building Standards Code (CBSC).

The construction of hospitals in California is a complex and demanding process that requires effective management and cooperation of the various stakeholders involved. The needs and requirements of each stakeholder must be taken into consideration:

- Contractors may want to make changes to material specifications or change the design to improve construction efficiencies, or they may find details that cannot be constructed.
- The design team wants the project constructed in compliance with the approved documents. However, designers may tend to consider any deviations to be "means and methods," but any such deviations may be considered to be changes and require OSHPD FDD approval (see OSHPD Website for Code Application Notice (CAN) 2-107.4 Amended Construction Documents).
- The owner would like a quality building constructed on time and within budget.
- California law requires that OSHPD approval be obtained before any construction is performed.

6.1 Overview of the Process

The contractor begins construction per the approved plans and specifications. The Inspector of Record (IOR), who is the primary liaison with OSHPD FDD, continuously inspects the construction

as long as segments of work are proceeding and maintains records of the activities, as described in Section 4 of this volume. The OSHPD FDD field staff makes scheduled and unscheduled visits to the project to observe the execution of the construction by conducting a construction site review and audit of the Testing Inspection and Observation (TIO) Program (see Section 5 of this volume) and project construction documentation with the IOR. The Compliance Officer triages requested changes and either approves the changes in the approved construction documents or directs that the design professional forward the documents to the OSHPD FDD Plan Review group for review and approval. (See Section 3 of this volume for detailed guidelines for plan review.) The architects and engineers make periodic visits to observe the construction to ensure work is compliant with the design.

In an ideal project, the plans and specifications would be followed exactly, the contractor would build the structure in strict compliance with the plans, the IOR would perform continuous inspection, and the OSHPD FDD field staff would visit the project as frequently as needed. Unfortunately, there are no perfect projects. Critical elements must be managed carefully to ensure that:

- Changes are only made when they are absolutely required
- All construction is approved by OSHPD FDD

Comprehensive control of all documents, including amended construction documents, inspection records, and reports, is key to the success of a project.

6.2 Challenges and Recommendations

A number of potential challenges and issues may be encountered on a project. These are outlined in the following along with recommended practices.

a. Contractor

Contractors will inevitably want to make changes to improve their efficiencies or because of material substitutions. Sometimes changes are made in the field because the construction details on the plans cannot be constructed owing to onsite conditions or insufficient clearances. Any changes to plans and specifications that materially alter the work require OSHPD FDD approval prior to the execution of the work (review Title 24, Part 1, Section 7-153; Addenda, Change Orders, and Instruction Bulletins). If unapproved changes are found during construction by the IOR or OSHPD FDD field staff then work will be halted until appropriate approvals have been obtained.

Tip: *The following practice is recommended for contractors:*

- On larger projects it may be beneficial to have the general contractor's superintendent or other project representative(s) accompany the IOR and OSHPD FDD field staff during

their scheduled walk-throughs of the construction. This allows the contractor to see how the process works and therefore better accommodate OSHPD FDD requirements. OSHPD FDD staff may request that they be allowed to conduct site reviews and audits with the IOR independently. OSHPD FDD audits the performance of the IORs and it is occasionally necessary to have performance discussions with the IOR in private.

b. Design Team

It is virtually impossible to prepare construction plans that are perfect; changes will inevitably be necessary. Unforeseen conditions, bid alternates, product substitution, owner changes, defective plans and specifications, and errors or deficiencies in the construction that must be brought into code compliance will all require that the plans and specifications be changed. Changes to these documents must be approved by OSHPD FDD staff and are documented using the OSHPD FDD application for Amended Construction Documents.

OSHPD FDD Amended Construction Documents (formerly referred to as Change Orders) are not to be confused with contractor Amended Construction Documents (ACD). OSHPD ACDs are changes to the construction documents that materially alter the work and are prepared by the design professional in responsible charge (DPOR). The approval process for ACDs can range from one day for field approval to several months for FDD Plan Review team review and approval depending on size and scope. Amended Construction Documents shall include the change to the contract amount unless alternate methods have been approved by OSHPD FDD for confirming construction cost changes. Construction cannot proceed until OSHPD FDD approves the ACD.

Tip: *The following practices are recommended for the design team:*

- Do not approve changes for convenience. The project manager should communicate this with the contractor(s) during the preconstruction meeting. Rarely do contractor-recommended changes actually save money for the project because of the ensuing delay for the modification of the approved plans and the approval of OSHPD FDD.
- Avoid making changes to the approved documents. ACDs can number into the hundreds depending on the quality of the construction documents and contractor-requested changes that are approved by the owner representative. Although the argument is often made that a change will improve the schedule and reduces cost, such is rarely the case when delays and work coordination issues are factored in.
- Maintain a management file for ACDs that tracks the status of each and assigns responsibility for required completion.
- Maintain a management file for deferred submittals submitted to OSHPD that tracks the status of each and assigns responsibility for required completion.
- Maintain a Request for Information (RFI) or similar instruments of service file that identifies any required changes resulting from the directive of the design team. The IOR

should review each RFI to ensure that the necessary ACD documentation is provided by the design team.

- The architect should accompany the IOR and OSHPD FDD field staff during observation of the construction work. Many issues can be resolved immediately on site, thereby avoiding ACDs. If an ACD is required, the designer can discuss the issue with the OSHPD FDD field staff and mutually agree upon the specific details that the ACD should be addressed. This simple process can avoid costly delays.

c. Owner

Project management varies from owner to owner. Some owners have staff dedicated to projects and some depend largely on consultants. Because owner changes are one of the major factors associated with project delays and associated problems, once the project permit is issued owners should resist the urge to make changes.

Tip: *The following practices are recommended for the owner:*

- Examine requests for changes by owner stakeholders carefully. Changes create project delay and increase costs. Evaluate whether any change is really needed or simply reflects a preference. Often new staff or new technology can stimulate the "need" for change by owners, but these should not be sufficient motivation. Determine whether the changes can be made later, after the project is complete. Often the cost of making changes during construction will be significantly greater than if the changes are made as a separate follow-on project.
- Consider administrative support for the IOR program. The IOR, the primary interface with OSHPD FDD and the project, conducts inspections, assists the design team with ACDs, acts as the on-site representative for OSHPD FDD, and keeps the owner informed about progress and problems. Consequently, allocating IOR resources is one of the critical elements of success for any project. Hire competent IORs and ensure a sufficient number to serve the project. Any weakness in the IOR program will lead to project delays, contractor claims, and general chaos. The IOR is the primary interface with OSHPD FDD and the project.
- Include the IOR inspection program as part of the contract. Inspections by the IOR are required by the regulations and must be performed. This process will increase the cost to the contractor and should be included in the contract. Establishing the inspection program early and managing it daily will facilitate coordination with OSHPD and optimize the time spent on the project by OSHPD FDD field staff.
- Schedule OSHPD FDD field staff time efficiently. OSHPD FDD's available time at the project site is limited. The owner, through the IORs, should ensure that priorities are established and that all parties are ready when COs, DSEs, or FLSOs are on site so that their time is efficiently utilized.

- Follow OSHPD FDD's process for resolution of problems should they arise. These processes are detailed on OSHPD's Website. The first step on any issue is to meet with the appropriate OSHPD field staff and explain the issue. Many times the owner does not have all the pertinent details and a discussion with the appropriate OSHPD field staff could save the owner time and possible embarrassment.

Other owner-related issues are discussed in detail in Section 7 of this volume.

d. Summary

The major challenges associated with construction project delays are the following:

- Work not executed in conformance with the approved construction documents
- Post approval changes
- Delays in processing deferred submittals and ACD documents

Changes will undoubtedly be required for any project but the key to success is to minimize these changes. Quality construction documents form the basis for any successful project. Keep in mind that just because OSHPD FDD approves the documents does not mean that they are quality documents. Plans and specifications need to be completely and thoroughly checked by the responsible architect or engineer before they are submitted to OSHPD. Plans and specifications that are incomplete or incorrect will be returned to the applicant. (See Title 24, Part 1, Section 7-125: Final Review of Construction Documents.)

Construction documents should be reviewed for constructability and appropriate changes should be made before they are submitted to OSHPD FDD.

All construction documents (architectural, structural, mechanical, electrical, and plumbing plans) should be coordinated. Qualified consultants can take the construction plans and, using computer systems, build the systems graphically to determine whether they can be built as designed. This effort can identify problems that would otherwise not be found until construction.

The design team should be encouraged to follow the recommendations presented in Section 3 of these guidelines.

Unrealistic expectations can cause difficulties and delays. OSHPD FDD field staff can only perform their duties within the code requirements as stipulated in the CBSC; expecting anything else is irrational and costly. It is incumbent upon owners and owner representatives, contractors, and designers to become knowledgeable with OSHPD FDD procedures and processes and to manage the construction project process to maximize the effectiveness of OSHPD FDD policies and procedures.

Section 7

Guidelines For Hospitals in Working with OSHPD

Section 7 - Guidelines for Hospitals in Working with OSHPD

7.0 Introduction

The purpose of this chapter is to provide hospital chief executive officers and other hospital personnel responsible for hospital construction and renovation projects with a basic understanding of the role of the Office of Statewide Health Planning and Development's Facilities Development Division (OSHPD FDD) as the building official for acute care facilities and to present Guidelines that can assist in ensuring that hospital projects in California are designed, plan reviewed, and constructed in an expeditious manner.

California hospital buildings are considered by many architects and engineers as the most complex buildings in the world to construct. Very few buildings with complex mechanical, plumbing, and electrical systems as are found in hospitals are expected to continue operations following a seismic event. California hospitals are also required to meet additional fire and life safety and access compliance requirements beyond those required by other hospitals in the United States.

By their nature and because of state law requirements, California hospital buildings take longer to design, obtain building permits, and construct and therefore are more expensive to build than non-hospital buildings or than hospital buildings in other states of equivalent size. This section describes OSHPD FDD's role and provides tips and strategies that are intended to minimize delays, minimize project costs and ensure seismically safe buildings are constructed.

Working on a hospital construction project can be either a frustrating experience or a collaborative one.

Tip: *To make it a collaborative one, follow these basic guidelines:*

- *Determine if the project will benefit from integrated project delivery.*
- *Determine if a pre-design meeting with OSHPD and Licensing staff is necessary. A pre-design meeting is required by OSHPD for projects with a value of $20 million or more.*
- *Require your project team to communicate with OSHPD.*
- *When required, submit a geotechnical report to OSHPD at least six months prior to submitting the project.*
- *Ensure that your design team produces quality documents.*
- *Do not allow your design team to blame OSHPD for its own shortcomings.*
- *Resolve conflicts by using existing processes, informal appeals and formal appeals when necessary.*
- *Ensure that your contractor adheres to the approved plans.*
- *Avoid owner-driven Amended Construction Documents (formerly referred to as Change Orders).*

Proper execution of these and the other guidelines outlined in this chapter will ensure that a project is put together in such a way as to allow it to navigate efficiently through the OSHPD process.

7.1 Basic OSHPD Processes

The basic processes of OSHPD FDD are focused on its central mission: to assure that hospital buildings are safe. The process is as follows:

- Plans developed by licensed architects and engineers are submitted to OSHPD for review and approval.
- Approved plans become eligible for a building permit.
- Construction of permitted plans is performed by a licensed contractor or an owner/builder under the continuous inspection of an OSHPD-certified Inspector of Record (IOR) and is observed by OSHPD field staff.
- OSHPD field observation staff accepts the work as complete when fully finished and certifies it as being compliant, allowing the State Licensing program to license the construction for healthcare operations.

As simple as it sounds, there are enough opportunities for missteps along the path that can grossly escalate costs, delay occupancy, and force changes in scope.

7.2 Guidelines

To avoid the pitfalls inherent in any complex construction process, hospital owners can adopt practices in their project planning and construction delivery methods that anticipate the causes of budget, schedule, and scope impact and prepare to resolve them proactively.

These strategies are used most effectively when applied to the appropriate phase of the overall project program. The phases used here are as follows:

- Project selection and identification phase
- Project planning phase
- Design phase
- Permit phase
- Construction phase
- Closeout phase

7.3 Project Selection and Identification Phase

Tip: *Understand and communicate clearly what you want to accomplish.*

Whether the project is as simple as introducing a new piece of equipment into your facility or as complicated as replacing an entire acute care campus, all subsequent strategies for working with OSHPD stem from how clearly and unambiguously you understand what you want to accomplish.

Develop an overall Master Facilities Plan and Program. Some hospitals are currently incurring additional expense in meeting the seismic mandate because over the years, construction and renovation projects took place without a Master Facilities Plan. Therefore, in meeting the seismic mandate some seismic compliant buildings and systems need to be modified or replaced while conducting seismic retrofits of noncompliant buildings. A Master Facilities Plan can assist in predicting when a proposed project may trigger upgrades of mechanical, electrical, plumbing, and structural systems as well as assist in determining where additional sources of power are required.

To assist hospitals in interpreting clinic building code requirements OSHPD developed Code Application Notice (CAN) 1-7-2100. This CAN will assist hospitals in determining which building authority has responsibility for a clinic project and to what code it is designed and reviewed.

OSHPD reports that some local jurisdictions, clinic owners, and design professionals have experienced confusion regarding which clinics and outpatient facilities are subject to the clinic requirements (OSHPD 3) found in the California Building Standards Code (CBSC). This results in a lack of consistency in application of the model code and OSHPD 3 requirements to clinic facilities as well as uncertainty regarding the roles of the local building department and OSHPD in the plan review, certification, and construction inspection processes.

Also, the hospital seismic mandate provides compliance options for nonconforming buildings. Such buildings shall (a) be retrofitted; (b) be closed, demolished, or replaced; or (c) have their acute care services removed and be converted to non-acute-care use. Over the next few years, a number of all hospital buildings could be converted from general acute care hospitals to other uses. Therefore, OSHPD issued CAN 1-6-1.4.5.1, which clarifies the CBSC for removal of acute care services from a hospital building.

Tip: *Be realistic about the preliminary budget and length of time needed to achieve your goal.*

Be prepared to invest the necessary time and resources. Determine if an integrated project team is needed for the project. It may result in higher front-end costs but more reliable overall project costs. Project cost estimates must take into consideration needed equipment, inflation, the project design, plan review schedule, and construction time. Being realistic will minimize delays that arise when plans are in OSHPD review. Develop and validate current project concept budgets, with contingencies, that concur with defined scope. Value engineering should be addressed and applied during the design development phase prior to submittal of the final construction documents to OSHPD for plan review.

7.4 Project Planning Phase

Tip: *Contact a Compliance Officer to determine whether or not a permit is needed for a remodeling project.*

If a hospital owner is unsure whether a permit is needed, a hospital representative should check with the OSHPD Compliance Officer (CO). If a hospital owner proceeds without a permit to construct a project that requires one, it is considered unauthorized construction (sometimes referred to as a "bootlegged project"). Unauthorized construction can have serious ramifications, including noncompliance with licensing requirements, validation survey citations, and noncompliance with Medicare Conditions of Participation and standards of accrediting organizations. Following a disaster, a damaged hospital that has unauthorized construction may not be eligible for Federal Emergency Management Agency (FEMA) assistance. Many OSHPD problems that arise with projects can at times be traced back to related unauthorized construction. OSHPD will require correction of all unauthorized construction and insist that the new work be performed under a building permit and designed to code.

Tip: *Assign project management duties to qualified people who can handle the expected workload.*

Obtaining a good outcome requires active management. Assignment is scalable; whereas installation of equipment may be managed by a single staff member, a hospital replacement project may require a team of managers. Remember, the design team, equipment vendors and contractors may not have the same interests in the well-being of a hospital as that of its management team. Management control of the process is essential to minimize problems as the work proceeds through the OSHPD process.

Assign a project manager to each project submitted to the FDD. The project manager is responsible for the overall coordination required to ensure a successful project. The project manager ensures that all players know their roles. FDD experiences indicate the following potential problems related to project management:

- Some hospitals do not use project managers and expect all project participants (architect, engineers, IOR, contractor, etc.) to communicate and coordinate among themselves and with OSHPD. This coordination and communication often does not occur without a project manager.
- Some hospitals believe the IOR serves as the project manager. The IOR has a defined role and it does not include project management.
- On occasion, a hospital will subcontract with the architect, engineer, or contractor on a project to also serve as the project's manager. These individuals have a conflict of interest in serving as a project manager.

- In some cases, a hospital employee who has full-time responsibilities is asked to pick up project manager responsibilities under "other duties as assigned." Because of the time required to perform quality project management, this scenario does not usually work.

Tip: *Choose planning and design consultants who have a demonstrated knowledge and understanding of California Building Code regulations and of the type of project you need delivered.*

Nothing bogs down the OSHPD process more than architects and engineers who do not understand the demanding requirements of California hospital design and how California hospital requirements are different from other hospitals in the United States. Architects and engineers who will be assigned to your project should be interviewed to ensure that they have demonstrated knowledge of California hospital design and can work constructively in the OSHPD environment. They must be licensed in California and should have had success with similar OSHPD projects.

This best practice is also pertinent to selection of equipment vendors and technology systems providers.

Tip: *Require that the architect and/or engineer contract contain a provision of the basic services and code- compliant drawings to ensure there are no extra charges for backchecks; and ensure that the hospital will receive timely copies of OSHPD's plan review comments.*

Retain a design team that is knowledgeable about the workings of the OSHPD FDD procedures and understands the CBSC.

Obtain references for architects and engineers.

- References are needed for both the architecture and engineering firm and for the individuals who will perform the work. Interview the specific design team individuals proposed for your project.
- Review recent similar projects the firm submitted to OSHPD to determine the quality of its work and the firm's ability to design to code (e.g., look at type of OSHPD comments and number of backchecks).
- Require the design professional to perform written code reviews by qualified internal staff or a qualified outside code consultant.
- The hospital should obtain an independent review of the architectural and/or engineering plans prior to submitting them to OSHPD. Although this entails additional cost it can ultimately save both time and money. It will enhance quality design, facilitate plan review, and help in determining the cause of any delays that may occur during the plan review process. This is a natural component of integrated project delivery.

- Retain a designer based on factors other than just a presentation by a firm's marketing representative. If any team members working on your project leave the design team during your project, stipulate in your contract that the replacement will have similar design and OSHPD experience and that the hospital owner has final sign-off on a replacement being assigned to your project.

Tip: *Develop a full understanding of the regulatory environment that affects your project.*

OSHPD has control over construction of your acute care building and certain aspects outside of it, but it is usually not be the only public agency involved given the nature of your project. All construction that adds floor area to your hospital will require some level of review by your local planning department for a California Environmental Quality Act (CEQA) and land use review, and it is possible for multiple jurisdictions to be involved in non-OSHPD permitting. Lastly, all projects should be completed with the ultimate goal of achieving licensure by the California Department of Public Health.

Determine the entire breadth of regulatory oversight with your design and legal consultants before undertaking your project. Incorporate the time required for all reviews, approvals and permits when setting your project schedule.

a. Land Use Approvals and CEQA

Land in California is typically not zoned for hospital use. New hospitals, or additions to existing facilities must go through a local review and approval process intended to create an entitlement to build a new hospital building. The local planning department will review your application to determine what local approvals might be required. The entitlement process often takes longer than the OSHPD plan review and permitting process, and as such, may become the critical path toward commencement of construction. Because of the complexity of entitlement issues, many hospitals will retain a qualified land use attorney with experience, preferably but not necessarily one with experience in working with the particular jurisdiction in question.

At a minimum, the local planning department will review your land use application to determine consistency with adopted general or specific development plans that include the property in question to determine what modifications to those documents might be necessary to support the proposed project. The planning department is also responsible for environmental review under CEQA. A preliminary review will be conducted to determine the potential effects to the environment; the initial review may result in a declaration that there are no impacts ("Negative Declaration"), that impacts can be reduced to nothing by requiring the project to undertake prescribed mitigations ("Mitigated Negative Declaration") or that the project may have significant impacts that require a full or partial Environmental Impact Report (EIR).

Development, review and approval of an EIR is a public process under the control of the local planning department and is intended to give the public opportunity to raise concerns about the

project and its potential impact. A draft EIR (DEIR) is prepared and published with a comment period deemed long enough by the local jurisdiction to ensure all concerned persons and organizations have a chance to comment. Comments and their responses are published in a final EIR (FEIR), the findings of which must be approved by the local jurisdiction along with any modifications to urban plans and a development agreement (if required). Because this is a discretionary land use issue, there is no guarantee that a proposed project will be approved to proceed to construction. Once approved, the local jurisdiction issues a Notice of Determination (NOD) which serves as the proof of entitlement to be provided to OSHPD and other permitting entities. The NOD is required by the local building department to release local permits as well.

b. Other Permitting Entities

Many locations in California have multiple layers of government which may have permitting authority. Most common are local air quality management districts that issue asbestos abatement and emergency generator permits. The local planning department or your legal counsel should assist you in determining which additional government bodies have influence over your project.

c. California Department of Public Health (CDPH)

Prior to commencement of operation of your new or remodeled facility, CDPH will survey the facility and its operational practice and readiness following field acceptance by OSHPD field staff. While this is fundamentally a step undertaken at project closeout, it is essential that the hospital have a plan in place during the project planning phase to ensure that the survey will be successful. Any service that the hospital intends to offer in a new or innovative way should be reviewed with the local CDPH office prior to design to reduce the likelihood of rejection following completion of construction.

Tip: *Determine your project scope and phasing.*

Use your staff and consultants to fully define all of the project's characteristics. Understand the type of approval required and the documentation needed for review. Adding, deleting, or changing services to be included in the project will add cost and time.

Tip: *Select the project approach and organization that is appropriate for the nature of the project and the hospital's preferred construction contracting method.*

Owners should keep control of the construction process throughout the length of the project. The manner in which the work is contracted should reflect the nature of the work and business approach of the owner. There are three fundamental contracting modes, with ample variation between them. Select the one that's right for you.

d. Design-Bid-Build

Considered the traditional model of construction contracting, the design- bid-build model relies on design professionals who develop plans that are intended to guide the work of the contractor.

The “design-intent” documents are less than complete, leaving many design decisions up to the bidding contractor to give them as much flexibility to determine means and methods and ultimately the bid price. Long thought to be the method that assures lowest cost, many owners have discovered that bids only cover what is shown on the bid set, opening the door for multiple amended construction documents that are really completion of the initial design at a cost higher than the bid.

Public entities are usually required to use the design-bid-build method but the risk of cost overruns using this method is causing some owners to rethink its use. OSHPD only reviews plans for code compliance, not constructability or good design. The design-bid-build method poses particular challenges for the OSHPD project due to its requirement that every element going into the construction of an OSHPD building that “materially alters” the work must be reviewed and approved prior to installation; this requirement is the primary barrier to continuous construction where the contractor is building from “design-intent” drawings that the contractor is completing design of in the field.

e. Design-Build

In this model, a contractor is hired to construct from plans that the contractor has taken responsibility for developing. The owner sets forth the requirements and the conditions of satisfaction but the contractor has the ultimate authority to determine how they are to be fulfilled. The design-build method produces a much higher level of certainty for adherence to budget but may not produce as satisfactory a result due to the extent the owner gives up control of design. Although design-build has many useful applications, it works to particular benefit for an OSHPD project focused on specific types of engineering systems. This approach requires a sophisticated, engaged owner. The owner must clearly define the project scope, specifications, and design intent up front.

f. Integrated Project Delivery

An Integrated Project Delivery Team (IPD) project is one in which all major design disciplines, the general contractor and trade partners are selected at the beginning of the project to work as a team. In a typical IPD contract, all major parties work from an open book and put their profit at risk, thereby ensuring that the success of the individual team member relies on the success of the team as a whole. The IPD team simultaneously designs the building and how it is going to be built, thereby minimizing amended construction documents and substantially improving adherence to budget. The time to initial permit may be longer than a traditional design-bid-build project but can be reviewed by OSHPD with a greater certainty of constructability.

While IPDs are becoming a more popular approach to major construction, it represents a totally new way to develop facilities. This approach works best where the owner is committed to a specific scope for the project that is not expected to vary. Some contractors are moving aggressively in the direction of heightened collaboration while others find it not to their liking.

The owner who is seeking the control of the design and function of the built space along with the greater reliability of adherence to budget may still find it difficult to adopt IPD due to the large up-front investment in having the full project team engaged from the very beginning. However, more owners have embraced IPD in recent years because of the substantially greater likelihood of having the project come in on time and budget without sacrifice to program from unanticipated budget adjustments that result in "value engineering," a process resulting in major redesign of architecture and engineering systems late in the design phase used to bring projects back into budget and/or schedule.

Tip: *Select the OSHPD process most appropriate for the nature of your project.*

OSHPD maintains several different approaches to review and permitting, many of which may be selected by the project proponent. Project applications that do not specify a particular approach will be reviewed as a standard project: permits for new construction and remodel projects that alter the existing structural frame (formerly known as "H" projects) and permits for new construction that do not alter the existing structural frame (formerly known as "S" projects). OSHPD maintains standard turnaround targets for these types of projects. OSHPD offers a "preliminary" review process for these projects to look at major code issues prior to completion of construction documents. OSHPD also offers a program where limits of work can be agreed upon prior to permitting. Refer to CAN 2-102.6 for remodel/renovation projects.

Additional automatic and optional plan review programs include:

- **Annual permit** – covers up to $50,000 in very small work on an annual basis.
- **AB 2632 project** – supports certain types of maintenance and repair work for single story buildings.
- **SB 1838 Project** – under $50,000. An owner can select the SB1838 application for work under $50,000 excluding the cost of fixed equipment. Projects using SB 1838 are not plan reviewed; they are triaged to ensure eligibility for the program followed by issuance of a permit. The SB 1838 permit is intended to expedite commencement of construction for very small projects; the risk to use this method comes from the potential to construct something to a non-code conforming condition which may require correction in later work.
- **Rapid Review Unit** – under $100,000. OSHPD will automatically route all projects under $100,000 in value excluding the cost of fixed equipment to this unit for full review prior to permitting. Turnaround for the RRU is longer than that for an SB 1838 but substantially shorter than that for a regular "H" or "S" project. Full review also eliminates the risk of work not being in conformance with code that arises from use of the SB 1838 process.
- **Incremental Projects** – new construction and remodel projects that alter the existing structural frame (formerly known as "H" projects) may be separated into two or more permit sets by applying for it to be an Incremental (formerly known as "I") project

instead. Each increment of these types of projects must represent one or more complete building systems. The incremental project method is typically chosen for large projects to allow for some portion of work to commence while other portions continue through the plan review process. The project proponent must request use of the incremental project; OSHPD will determine whether the proposal meets the requirement of code and is separated into appropriate increment packages.

- **Phased Plan Review (PPR**) – established by SB 306, PPR is a voluntary review process that must be proposed by the project proponent and approved by OSHPD prior to engagement. OSHPD is not obligated to accept any project for phased plan review. PPR functions as a method to resolve all code issues prior to development of construction documents, assuring their highest possible quality. PPR works well with new construction and remodel projects that alter the existing structural frame (formerly known as "H" or "I" projects); project teams using Integrated Project Delivery (IPD) methods will see PPR as a way of ensuring conforming design at the earliest possible opportunity during design phase to eliminate waste or rework.

Tip: *Determine whether your project is feasible.*

Use your management staff and consultants to determine whether what you want to do can be accomplished. The following sub strategies are needed to ensure feasibility:

- **Determine whether there are physical limitations that will prevent achieving your intended outcome**

  There are limits to the built environment that can make a project infeasible. Physical feasibility may also be affected by existing conditions of the target location or by adjacent conditions. In applying regulations, OSHPD can require changes that either increase cost or result in project abandonment if physical feasibility is not properly evaluated. Accurate as- built drawings and physical evaluation of existing conditions are essential in determining feasibility for remodel or addition projects. Drawings should include all disciplines (e.g., architectural, electrical, mechanical, and plumbing).

- **Determine the financial feasibility of the project**

  Whether you start with a target budget or target outcome, make certain that the total project budget and the scope of the project match. Careful planning at this stage of the process is the most important determinant of project success. Inaccurate or unrealistic budgets are the most common drivers of change throughout the project duration. Any corresponding changes in the scope of the project must be addressed in the project's budget. Distinguish between the budget and construction costs. Make sure adequate contingencies are defined to accommodate unforeseen hospital impacts.

7.5 Design Phase

Require that your design team of architects and engineers design to the current California Building Code

Experience has shown that there are common problems arising from design that seriously impact the satisfactory completion of the OSHPD process. These include:

- Designing to a code other than the appropriate provisions of the CBSC.
- Designing to out-of-date codes.
- Using room designations or other nomenclature on plans that are not consistent with the CBSC.
- Failure to make best use of PINs, CANs, FAQ's (Frequently Asked Questions, and reminder lists) published by OSPHD.
- Failure to follow the OSHPD Remodel CAN, which provides flow diagrams for use in planning the scope and boundaries of remodel projects.
- Failure to accurately identify and implement into plan development, the existing facility building as built conditions.
- Failure to incorporate the manufacturer installation requirements into your permitted plan.

Tip: *Build in flexibility for change.*

A foundational design goal of any hospital project should be to provide flexibility to change. With the length of time necessary to implement hospital projects in California and the quick evolution of technology, potential changes/reactions from healthcare reform, changes in future workloads (increased or decreased) and evolution of models of care… building designs need to build in flexibility in as many ways as possible to help address necessary modifications to the building as planned.

A few of the of the best methods to accomplish this important goal is the inclusion of shell or unassigned space, the use of a "universal" structural grid, the planning in of soft functions around critical departments for future expansion, utilization of standard size rooms, and consideration of adaptable rooms. These should not be afterthoughts in the project or only part of a value engineering effort but carefully integrated as part of the planning process.

There are varying degrees of shelling (cold shell, warm shell, built out but not equipped, etc.) as well as different opinions on what is soft space vs critical but the point is clear…plan into the project ways to adapt and adjust to the unknown changes in the future. If considering standardizing or multi use rooms, ensure that the size is inclusive of all the potential uses…exam rooms that can be easily converted to minor procedure rooms, or Medical / Surgical patient rooms that can be easily modified to ICU. Ensure that the infrastructure to support future build

outs of shell or conversion of soft space or adapting rooms to higher functionality is built into the project (air changes, filtration, code requirements, etc.).

Another creative variation is to fully design and permit the project knowing that you may well shell some of the building. Develop a shelling strategy, which could be implemented either as an alternate approved design or as an amended construction document. Design of systems should be planned to accommodate this plan.

As a peripheral perspective, sustainable design and disaster planning need to be considered in designing flexibility into a hospital. Facilities currently in design in California need to meet the 2030 Energy Challenge mandate. Health facilities will continue to be challenged by constantly changing industry environmental standards. Planning for various threats (man-made or acts of God) requires careful infrastructure design considerations. Facilities must consider these threats as part of their overall infrastructure strategy. These events may be unique with unusual risk factors such as major earthquake, chemical, radiation and biological attacks, or unique to healthcare such as pandemic flu. In either case facility infrastructure must be designed with consideration to these risk factors. Design interventions range from providing ED / inpatient bed surge capacity, mechanically isolating areas of the building, creating major outdoor triage / decontamination spaces, accommodating additional staff, etcetera.

Tip: *Submit a geotechnical report, when needed, in a timely manner.*

Some projects require geotechnical reports except as noted in CAC, Section 7-117 and CBC, Section 1603A. Approval for a geotechnical report takes a long time. Owners should plan for this and submit the report at least six months ahead of the preliminary submittal.

OSHPD believes the key to receiving approved geotechnical and engineering geologic reports in a timely manner is to use experienced firms and to submit the reports early in the process. Consequently, the geotechnical report for the selected project site should be submitted prior to the preliminary review if possible. The approved report will establish the foundation and structural design criteria necessary for the structural engineer to design preliminary submittal data.

Tip: *Ensure OSHPD is contacted for interpretation or clarification of all code issues that require clarification.*

OSHPD expects the licensed design professional to know and follow the code in the preparation of design. The code itself is somewhat flexible and open to interpretation. When designers have questions or require clarity as to the meaning of specific code issues, or need validation of their interpretation, they are encouraged to seek clarifications through the various channels OSHPD provides.

- The designer may contact the Building Standards Unit for clarification of specific aspects of the code to determine their applicability.
- Design teams may present concepts to a regional plan review staff on an appointment basis in Pre-application Conferences to validate specific design issues or to clarify project scope (OSHPD Remodel CAN Conference).
- Design teams should clarify which aspects of their design may not adhere to the specifics of the code. These issues include:
    - Alternate means of compliance for architectural, electrical, mechanical, and structural conditions;
    - Alternate methods of protection for fire and life safety issues; and
    - Program flexibility, which affects the relationship between architecture codes and the specific needs of different care delivery models.
- The resources of the Seismic Compliance Unit can be used to ensure that the designer understands his or her obligations under the Seismic Safety Act and is including the scope needed in the project to further compliance needs.
- Plans can be submitted for a preliminary review by OSHPD. The purpose of the preliminary review is to obtain written comments that validate or correct the basics of the architectural and fire and life safety elements of design. A preliminary review can mitigate potentially gross errors in the documents submitted for permitting. To get the most out of the process, plans should be submitted at about the 50 percent Design Development (DD) stage. Architects and engineers should sequence for the intended results. OSHPD preliminary review comments should be included by the architect or engineer at the end of the DD phase and the comments can then be incorporated into the construction documents. The preliminary review submittal date will also fix the date of applicable codes to which the project will be designed.

Tip: *Determine during the design process whether you want to have early permits for portions of the work.*

OSHPD allows larger new construction projects to have complete phases of construction broken out into incremental submittals for permitting. Typical incremental submittals might be foundations and structure in one package and the building skin and interior build-out in a second package. Incremental project permits can sometimes allow for an earlier start to new construction than would occur if a permit for the entire building had to be obtained first. The decision for increment submittals should be included in preliminary submittals. However, although incremental submittals may reduce time frames they may also add cost and complexity.

Tip: *Begin production of the construction documents only upon receipt of design development sign-offs.*

Once construction documents are completed, adding, deleting, or changing programs and services will add cost and result in delays because OSHPD will need to review the program again. A hospital gains the maximum benefit of OSHPD services prior to completion of construction documents. Obtain all design development sign-offs before producing the construction documents. Upon completion of documents, an independent plan reviewer should be retained to ensure the design meets code and to minimize the number of OSHPD backchecks.

Tip: *Avoid Deferred Submittals.*

Designers in California sometimes ask OSHPD to allow the submittal of designs for various building systems to be delayed until after the project has been approved and permitted. Deferrals are requested by the design team and it is up to OSHPD to determine whether they will be granted. At one time, it was seen as a courtesy to the design team to allow deferred submittals; however, this practice has led to designs that are poorly coordinated. Review of deferred approval applications can take as long as the review for the initial application and can cause delays if not managed properly. Modern design management supports early coordination of all building elements to be designed together. Insist on there being no deferred submittals that cannot be otherwise avoided.

Deferred submittals may be used by hospitals for large or technologically- sensitive pieces of clinical equipment when there will be long periods of time between design and installation. Because in a new hospital five years may elapse between preparation of construction documents and the completion of construction, use of the deferred approval method will allow the hospital owner to select the most current technology for installation without having to change a prior design. A hospital owner must recognize that some deferred submittals are common unless a subcontractor or manufacturer has been selected early enough to incorporate the necessary details and calculations into the OSHPD submittal documents.

a. Deferred Submittals - Clinical Equipment

Clinical Equipment (CTs, MRI, PETs, etc.) presents a unique challenge to owners and designers. Medical staff wants the latest technology when procuring large expensive clinical equipment so it is in their interest to delay the selection and procurement of the equipment as long as possible. Designers need the specifications of the equipment and the design assistance from the manufacturer to design the room to support the physical requirements (electrical, mechanical, plumbing, space needs, etc.) of the equipment. Clinical equipment manufacturers' work with the project designers to provide a floor plan for approval by the owner, this floor plan is the basis of design for the equipment installation and operation.

Typically large hospital projects are designed in increments. Increment 1 would be foundation and steel, Increment 2 would be the build out of the floors, Increment 3 clinical equipment, etc. Increment 1 and Increment 2 plans would include designed shelled space for the clinical

equipment. This space should be labeled on the plans for the intended future use. Increment submittals should be submitted up front. This will assist OSHPD plan reviewers and improve plan review turnaround time.

Determining the schedule for the selection and delivery/installation of the equipment is a collaborative effort by the owner and the design team. One effective method is to use the project schedule to determine the date of beneficial occupancy and then work back. The manufacturer has an installation and testing schedule requirements, the design team can provide the schedule requirements for design, OSHPD and construction. With this information, a procurement schedule can be developed.

Designers should design the "shell space" large enough to accommodate any manufacturers' clinical equipment of the type needed. The mechanical, electrical and plumbing (MEP) systems should be sized accordingly to meet equipment needs. Some owners require the designers to increase MEP system's capacity by 10% to 20% to ensure future changes to technology can be accommodated.

b. Deferred Submittals -Low Voltage (Information Technologies/Information Services) Design

As with the Clinical Equipment issues addressed in Clinical Equipment above, low voltage design requires special attention. These systems are complex, unique and rapidly changing and require a designer with the necessary specialized knowledge and experience. The owner should require that the architectural and engineering team include a low voltage design engineer. Or the owner can assign a low voltage design professional that knows the facility and can make decisions for the owner.

The design team should work in collaboration with the hospital's Information Technology / Information Services (IT/IS) staff to develop the basis of design (systems, capacities, technology, HVAC requirements, future growth, etc.) and to review the construction drawings as they progress. One of the first issues that should be resolved is the project's responsibilities verses IT/IS's responsibilities. Many IT/IS departments have a select number of low voltage contractors that they have confidence in and with which they work on a regular basis. This may work satisfactory for small IT/IS projects but could be a significant issue for larger projects.

Other team members to include are the Clinical Informatics Nurse to ensure that the clinical needs of the systems are being addressed, as well as the Clinical Engineering Department (Bio-Med) to ensure that all cabling and power needs are being addressed for the clinical equipment and systems that must be linked to the network.

Due to the overall coordination and installation responsibilities of multiple trades, experience has proven that the best approach is to have the project construction team responsible for installing everything including the finished wall, ceiling, floor and equipment racks and mounting. IT/IS

would then be responsible for the installation of IT/IS equipment and operational testing. IT/IS installation and testing should be included in the owner's project schedule as it will impact beneficial occupancy.

It is becoming more apparent to the healthcare industry that IT systems are complex. Because of the multi-disciplines that are needed to design the IT infrastructure, it is highly recommended that Facilities Construction be the hospital lead for such projects due to their experience with central plant infrastructure systems for both hospitals buildings and the campus.

Tip: *Ensure that the application for plan review is complete.*

Design professionals are customarily responsible for preparing the OSHPD plan review application. However, mistakes are frequently made. The hospital representative should review the application to ensure that:

- The right forms and all applicable forms are used and are completed correctly and thoroughly as well as signed by the appropriate parties (e.g., projects with incremental submittals and permits will require a special form).
- An appropriate hospital official with adequate OSHPD knowledge is named as the facility representative (who will receive copies of OSHPD correspondence that would otherwise go only to the designers).
- The boxes on the form describe how this work furthers fulfillment of your SB 1953 Compliance Plan (although almost all work does, most goes uncredited).
- The hospital owner will pay 1.64% of construction costs (excluding designer's fees and other "soft" costs) to OSHPD as their fee for service.
- OSHPD has deemed the plan complete owing to no defects or omissions.

An applicant is expected to be as accurate as possible in estimating construction costs and there will be adjustments made at the end of the project. Please refer to Code Application Notice 1-7-133 on OSHPD's website for more comprehensive information about fees.

7.6 Permit Phase

Tip: *Keep track of the plan review process through OSHPD.*

Plan review follows a predictable course through the OSHPD process. Documents submitted are triaged by OSHPD plan review staff for completeness and are accepted or sent back. Once completed, the documents are returned as approved documents or with comments that must be corrected before they can be approved. Revised documents are submitted for additional review called a backcheck. The backcheck cycle repeats until the plans can be approved. OSHPD sets target durations for each phase of review.

Hospital leadership should closely monitor the progress of the plan review process:

- Receive an explanation from the design team if drawings are returned by OSHPD during triage.
- The hospital project manager should track OSHPD performance during review cycles to maintain an understanding of the status of the plan review. All OSHPD plan reviews can be observed in real time using the OSHPD Website. Concerns over missed target dates should be raised with your design team and ask them to seek clarification from OSHPD plan review managers.
- Monitor the passage of time between the date that OSHPD releases drawings with comments to be corrected and the date that your design team resubmits. Do not blame OSHPD for a slow "turnaround" by the designers. Projects that take longer than ninety (90) days in turnaround waste the hospital's resources and could result in being treated by OSHPD as abandoned projects.
- Keep track of the number of review cycles. Three cycles are not unusual: first review and two backchecks. Continued comments by OSHPD plan review staff after the second backcheck may be an indication of a problem with design or inappropriate response to OSHPD comments by the design team. Hold your design team accountable for the satisfactory outcome of the OSHPD process.
- Request the design team to provide complete schedules with committed response times and list of critical issues requiring hospital input as well as dates required for hospital data to be provided so that the data can be completely integrated into the documents.

OSHPD has a goal of 60 days to review an initial project other than new construction and remodel projects that alter the existing structural frame with 30 days for each backcheck. OSHPD will want to schedule a meeting of interested parties if there are still plan review comments after two backchecks. More than two backchecks indicates that there are problems with the project and hospital owners would want to schedule such a meeting as quickly as possible. OSHPD is open to negotiating timelines on longer projects.

All documents sent to OSHPD are triaged. Any document that can be handled in less than a half hour is acted upon immediately. OSHPD uses over-the-counter review for projects that do not require more than two hours for structural review and no more than one hour of review for other disciplines.

OSHPD lists the status of each project on its Website. A hospital owner or representative can reach the Website using the hospital's facility number or the project number. This tracking system can be used by the hospital leadership to track the status of a project.

OSHPD reports that the chief reasons for project delays are the following:

- Defects or omissions in plans
- Failure to promptly reply to OSHPD plan review comments

- Project changes during the review process
- Project changes during construction. Although a project is complete and a building permit is issued, an Amended Construction Document can result in a delay of a project during construction. On a number of occasions, OSHPD has observed a contractor informing a hospital representative that considerable money can be saved during construction using an alternate means. What the owner is not told is that many times the alternate means can hold up construction while it is plan reviewed and the delay costs may be more than the savings from using the alternate means. It is essential that hospital representatives understand that code is minimal. On some occasions, designers may attempt to use an alternate means to achieve less than code. Any alternate means must be equivalent or greater than code.

  Tip: *Obtain all needed OSHPD forms off the OSHPD Website to ensure they are current.*

  OSHPD forms change from time to time. To make sure you are using the most current form, obtain it off the OSHPD Website. Using an outdated form could result in a delay.

  Tip: *Never let your permit lapse.*

  Construction must start within one year of plan approval, failure to do so will cause the permit to expire and with it the approval of the plans. Prior to a building permit lapsing, an extension can be requested. Once a permit is allowed to lapse, proceeding with the project entails starting the OSHPD process from the beginning. If the building codes have been revised in the meanwhile, the design process must be based on the new code.

  Tip: *Use established channels in resolving disputes with OSHPD FDD.*

a. Comment and Process Review

The decision of OSHPD plan review and field staff as it relates to interpretation of the CBSC may be appealed by a hospital or its design team or contractors if it is felt that the interpretation is in error. There are both informal and formal processes for appeals, each with its own timing and mechanisms.

The Comment and Process Review (CPR) mechanism is established by OSHPD as a method for a hospital owner or its consultants to have persons of increasing authority review code interpretations made by first-line plan reviewers and field personnel. This informal process is as follows:

Step 1: Review with the Comment Originator

The plan review staff and field staff are responsible for rendering judgments regarding applicability of the building code. If the hospital or design team object to an interpretation of the code as expressed through the comments made by OSHPD staff, the first step of the process is to

discuss the difference of opinion with the staff person who originated the interpretation. This allows for disputes to be resolved at the lowest level.

Step 2: Appeal to the Supervisor

If the matter is not resolved satisfactorily with the staff member, the issue may be appealed to the Regional Supervisor or the Regional Compliance Officer who supervises the originator of the code interpretation. The Supervisor may uphold, overturn, or modify the interpretation as is determined to be appropriate. The Supervisor's ruling then becomes effective.

Step 3: Appeal to the Division Chief

If the matter is not resolved satisfactorily with the supervisor, the issue may be appealed to the Division Chief over the region involved in the dispute. The Division Chief may uphold, overturn, or modify the interpretation and may seek guidance from other supervisory personnel who serve as subject-matter experts over the disciplines in question or from other OSHPD staff as appropriate. The decision of the Division Chief marks the end of the informal appeal process.

b. Hospital Building Safety Board

Once the informal process has been exhausted, the issue may enter the formal appeal process by being submitted for judgment to the Hospital Building Safety Board (HBSB). The HBSB, a statutory body appointed by the OSHPD Director, serves two purposes:

- To advise the Director of OSHPD on the administration of the Hospital Facilities Seismic Safety Act.
- To act as a board of appeals with regard to any actions taken by OSHPD related to hospital facilities and any other action taken by the OSHPD FDD; including SB 90 appeals and disciplinary action taken against an IOR. The hearing process is a formal action of the state of California and the outcome is binding.

If the appellant has been adversely affected by the decision of the HBSB, the appellant may further appeal the issue for resolution by the California Building Standards Commission (Health & Safety Code Section 18945).

c. Considerations for Appeals

Applicants have an undisputed right to appeal without retaliation. Before engaging in appeals, the hospital owner should consider the following points:

- Ensure that your professional design consultant or contractor has a winning argument. Codes can be open to interpretation and OSHPD's orientation of interpretation is toward the greatest degree of safety. Be ready to show that the code unambiguously allows the design being proposed and that the application of code does not reduce safety.
- Ensure that your project can endure the time it takes to appeal a comment. The informal CPR process is intended to be fairly quick, whereas the formal HBSB process can take up

to a year for resolution. Projects in the plan review stage can often pursue the CPR process but may be set back substantially by an HBSB appeal. However, PIN 47 provides for an expedited HBSB appeals process.

7.7 Construction Phase

Tip: *Hire an IOR appropriate for the project.*

The California Building Standards Administrative Code requires that all hospital construction be observed continuously by an OSHPD-certified IOR. The IOR is selected and hired by the hospital owner.

An OSHPD-certified IOR is required to perform inspection of all alterations, modifications, and additions to existing hospital buildings and new hospital facility construction. OSHPD certifies inspectors for three levels of inspection defined as follows:

- Class A IORs may inspect all phases of construction, including architectural, mechanical, electrical, fire and life safety, and structural elements. Note that this class includes major structural construction.
- Class B IORs may inspect only the following phases of construction: architectural, mechanical, electrical, fire and life safety, and anchorage of nonstructural elements.
- Class C IORs may inspect only specific disciplines of construction defined in regulations.

See Section 4 of this volume for a comprehensive review of IOR roles and responsibilities. Depending on the size and complexity of a project, more than one IOR may be necessary to avoid construction delays. The owner should ensure that the inspection process does not become the critical path during construction, by providing competent adequate inspection including the number of inspectors needed to perform timely inspections.

Prior to retaining an IOR, references should be checked with hospitals and architects who worked on projects with the IOR. The prospective IOR should also have experience with similar projects.

Tip: *Discuss your phased occupancy plans with OSHPD field staff before construction begins.*

Large projects sometime require that occupancy is requested for portions of the construction before all of the work is finished. Discuss your early occupancy needs with OSHPD field staff before construction begins. Use of an integrated project delivery model will address this issue up front.

Tip: *Avoid deviations from approved plans to minimize Amended Construction Documents.*

Amended Construction Documents (formerly known as Change Orders) are one of the chief reasons for project delays and cost overruns. Amended Construction Documents (ACDs) are sometimes generated to meet the needs of medical staff after a project receives a building permit

or originate from a contractor who has an alternative means of constructing the project (not approved by OSHPD) to save the hospital money. A building permit is issued for a specific plan reviewed project. All ACDs that materially alter the work of construction need to be reviewed by OSHPD and thus cost time and money. Hospital owners should determine all of the actual cost implications of an ACD prior to requesting it.

Tip: *Require that the contractor obtain both the hospital's and OSHPD's approval before deviating from the approved plans.*

Ensure that your contract for services with the contractor requires the contractor to adhere to the requirements of the approved plans without deviation. Any work not performed to exact specifications can be ordered removed by OSHPD field staff at any time. If that happens, hold the contractor responsible for costs and lost time resulting from such deviations. Hold the general contractor (GC) responsible for understanding, complying, and building per the OSHPD-approved documents. The GC should be involved with the project early and must work with designers and the hospital to resolve construction issues prior to construction starting. Owner-driven ACDs are common in the rapidly changing healthcare industry, since needs and services often change. As experienced professionals, the hospital owner, designer, and contractor team must assume responsibility for managing and anticipating some of these changes and incorporate flexibility into the design and construction schedules to mitigate ACDs.

Tip: *Ensure that your architects and contractors are ready for OSHPD field staff visits.*

Each OSHPD field staff member has a large geographical territory to cover with numerous hospitals to visit. Scheduling field staff visits well in advance of the need for an on-site visit is the norm; however, the trip will be wasted and the construction will face costly delays if the contractor and design team are not properly prepared for the visit. Ensure that your project team understands its responsibility and the ramifications of not being prepared. Typically, the IOR schedules OSHPD staff visits. A hospital representative, who understands the project and has the ability to keep the hospital leadership up to date on the project, should be a participant in these meetings.

7.8 Close-Out Phase

Tip: *Be prepared for the final OSHPD review.*

OSHPD field staff must approve the work before issuing a certificate of occupancy for the construction. Ensure that the observation will be successful by making certain that the work is ready for the review and that all required verified reports, testing and inspection reports, and ACDs have been approved before the final inspection.

Tip: *Do not attempt to use any building or equipment or provide any service until the building is approved by OSHPD for a certification of occupancy.*

The hospital has no right to use the finished work until OSHPD has issued the certificate of occupancy. Normally use for patient care is restricted until Licensing & Certification has licensed the construction or equipment for use following the receipt of the certificate of occupancy.

Tip: *Ensure the project is closed with compliance.*

Approval by OSHPD is often assumed to be the end of the journey. Before OSHPD will log a project as being Closed With Compliance (CLSD) the following needs to occur:

- OSHPD shall schedule a final state agency inspection of the work subsequent to the receipt of the responsible architect or engineer's statement that the contract is performed or substantially performed.
- The final approval of the construction shall be issued by OSHPD when:
    - All work has been completed in accordance with the approved plans and specifications
    - The required verified compliance reports and test and inspection reports have been filed with OSHPD
    - All remaining fees have been paid to OSHPD
- Final approval shall be confirmed by a letter sent to the Department of Health Services with a copy to the applicant. The letter shall state that the work has been constructed in accordance with CBSC, Title 24, California Code of Regulations.
- Upon completion of the project, all copies of construction procedure records as required by Section 7-145(a)6 shall be transmitted to OSHPD. Construction procedure records final verified reports by the AOR, various EORs (e.g., Electrical, Mechanical, and Structural), the IOR, and the contractor, as well as written notice from the hospital asking that the project be closed and certification of the final construction cost and cost of radiology equipment installed. Projects are classified as Closed Without Compliance (CLWC) typically for two reasons:
    - Work was abandoned after it began.
    - The closing paperwork was not properly filed. Projects that are logged into the OSHPD database as CLWC do not disappear with the passage of time. They require resolution of the conditions that resulted in the assigned status. Future work may be severely impacted by the existence of CLWC projects when the new projects have to rely on conditions that were created under the CLWC project. The CLWC status can sometimes be cleared retroactively but often with great effort.
- If outstanding non-code complying issues remain, the project will be closed without CBSC compliance (CLWCC). Licensing and Certification will be notified for appropriate action if the non-code compliance issue results in an unsafe condition.

Section 8

Glossary: Acronyms and Definitions

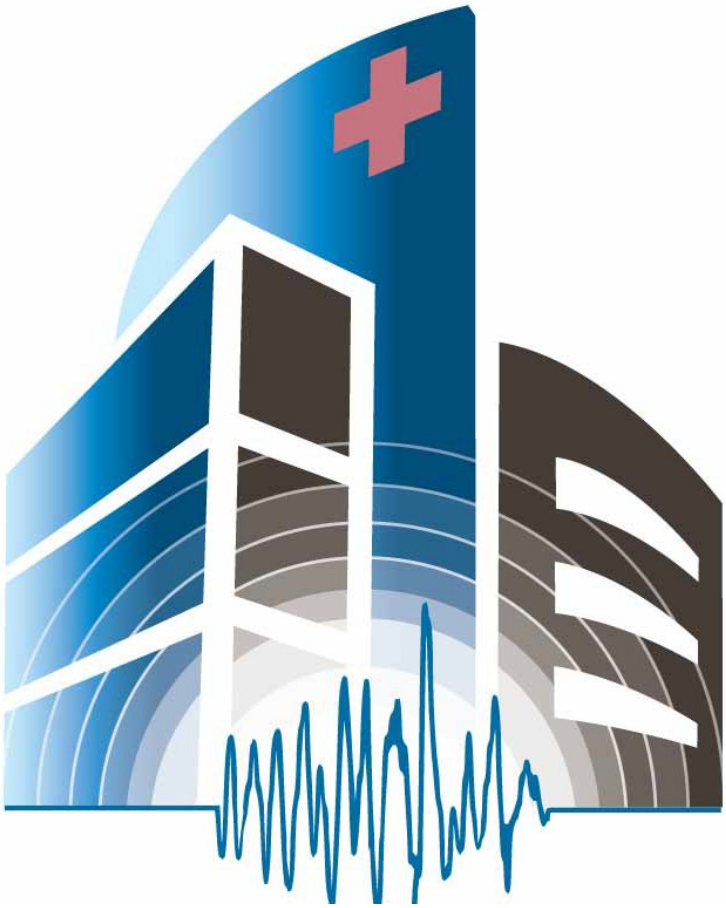

Section 8 – Glossary: Acronyms and Definitions

ADA	Americans with Disabilities Act
AHJ	Authority Having Jurisdiction
Alteration	Any change in an existing building that does not increase and may decrease the floor or roof area or the volume of enclosed space
Alternate Method of Compliance	Use OSHPD Form: OSH-FD-126 where alternate method of code compliance is being requested
Amended Construction Documents	See OSHPD CAN 2-107.4 (Also see minimum non- refundable application filing fee definition for further information)
AOR	Architect of Record; a person who is registered with the State of California and holds a valid license under Chapter 3 (commencing with Section 5500), Division 3, of the Business and Professions Code and is in general responsible charge of the work for a given project. AORs shall sign and stamp drawings, specifications, or reports that are prepared under their responsible charge.
Approved Drawings and Specifications	All drawings, specifications, addenda, amended construction documents and deferred submittals that have the approval of OSHPD and the Hospital Governing Board
Architect in Responsible Charge	See AOR
CAN	Code Application Notice http://oshpd.ca.gov/FDD/Regulations/CANs/index.html
CBC	California Building Code; the State's adoption of the model Building Code with State Amendments for Part 2 of Title 24, CCR, which includes structural, architectural, and fire and life safety code
CBSC	California Building Standards Code; the State's entire adopted Code (i.e., the California Building Code, California Electrical Code, California Mechanical Code, California Plumbing Code, and any other adopted Building Code or Standard); also commonly referred to as Title 24 and includes all parts of Title 24
CCR	California Code of Regulations
CEC	California Electrical Code; the State's adoption of the National Electrical Code with State amendments for Part 3 of Title 24, CCR

CEQA	California Environmental Quality Act
CFC	California Fire Code; the State's adoption of the International Fire Code with State Amendments for Part 9 of Title 24, CCR
CHCF	California HealthCare Foundation
CLSD	Closed With Compliance
CLWC	Closed Without Compliance
CLWCC	Closed Without Code Compliance
CMC	California Mechanical Code; the State's adoption of the model Mechanical Code with State Amendments for Part 4 of Title 24, CCR
CMS	Centers for Medicare & Medicaid Services; a federal agency within the U.S. Department of Health and Human Services
CO	Compliance Officer; employed by OSHPD and assigned to a given geographical location
Continuous Inspection	An inspection conducted on an ongoing basis for those components of a project that are in progress (see Title 24, Part 1, 7-145)
CPC	California Plumbing Code; the State's adoption of the model Plumbing Code with State Amendments for Part 5 of Title 24, CCR
CPR	Comment and Process Review
DD	Design Development
Deferred Submittals	Those portions of the construction that cannot be detailed fully on the approved drawings because of variations in product design and manufacture; usually a performance specification
DSE	OSHPD District Structural Engineer
EIR	Environmental Impact Report
Engineer in Responsible Charge	Engineer of Record (see EOR)
Engineering Judgments	An Engineering Judgment (EJ) is an alternative protection method for determining fire resistance. See OSHPD CAN 2-703.3

EOR	Engineer of Record; a person who is registered with the state of California and holds a valid license under the Business and Professions Code Chapters 3 and 7, Division 3 and who is stipulated in the California Building Standards Title 24, Chapter 7, Administrative Code
e-Services Portal	(also known as Accela) OSHPD's internal Logbook computer system which tracks project approval status, project changes, and project close-out information
FDC	Fire Department Connection
FDD	Facilities Development Division; the division within OSHPD that serves as the building department for California hospitals
FEC	Fire Extinguisher Cabinet
FEMA	Federal Emergency Management Agency
FHC	Fire Hose Cabinet
Field Confirmation	A process performed by the field staff in communication with the plan review AOR and the IOR
Field Review	Projects that can be reviewed in the field under provisions in the FREER Manual
FLSO	OSHPD Fire Life Safety Officer
FREER	Field reviewed projects, exempt projects, and expedited review projects as outlined in OSHPD's FREER manual (see OSHPD Website for contents of FREER Manual)
GC	General Contractor
GOR	Geotechnical Engineer of Record
HSSA	Alfred E. Alquist Hospital Facilities Seismic Safety Act
HBSB	Hospital Building Safety Board
Health Facility	Any facility, place, or building that is organized, maintained, and operated for the diagnosis, care, prevention, and treatment of human illness, physical or mental, including convalescence and rehabilitation and including care during and after pregnancy, or for any one or more of these purposes, for one or more persons, for which such persons are admitted for a 24- hour stay or longer

Hospital Building	Any building defined by Section 129725, Article 1, Chapter 1, Division 107 of the Health and Safety Code; note that a skilled nursing facility or intermediate care facility of single story, wood frame, or light steel frame construction is not considered a hospital building
IBC	International Building Code
IFC	International Fire Code
Intermediate Care Facility	A health facility that provides the following basic services: 24-hour care to residents who have a recurring need for skilled nursing supervision and need supportive care, but who do not require availability of continuous skilled nursing care
IOR	Inspector of Record; an individual who is (a) an OSHPD-certified hospital inspector, pursuant to the provisions of these regulations, (b) selected and employed by the licensed facility's owner or representative to inspect and observe the construction of any given project for which a building permit has been issued by OSHPD, (c) approved by the architect and/or engineer in responsible charge and OSHPD as being satisfactory to inspect a specified construction project, and (d) tasked with safeguarding the public by verifying that the hospital is constructed per the approved documents
JCAHO	Joint Commission on Accreditation of Healthcare Organizations. Now known as The Joint Commission (TJC)
Materially Altered	See OSHPD CAN 2-107.4 for definition
NEC	National Electrical Code
NFPA	National Fire Protection Association
OB	Owner/Builder Designation
OSHPD	Office of Statewide Health Planning and Development http://oshpd.ca.gov/
PIN	Policy Intent Notice http://www.oshpd.ca.gov/FDD/Regulations/PINs/index.html
POR	Professional of Record; a person who is registered with the state of California and holds a valid license under the Business and Professions Code Chapters 3 and 7, Division 3, and who is stipulated in the California Building Standards Title 24, Chapter 7, Administrative Code

Post Approval Document	OSHPD document that includes Amended Construction Documents (previously known as change orders and instruction bulletins), deferred items, and addenda after the plans are approved. See OSHPD Form: OSH-FD-125
RCO	Regional Compliance Officer; employed by OSHPD to supervise a field observation unit
RRU	Rapid Review Unit
RFI	Request for Information
SB	Senate Bill
SEOR	Structural Engineer of Record
Shop Drawings	Detailed drawings developed by the subcontractor to facilitate construction (e.g., duct work)
Skilled Nursing Facility	A health facility that provides the following basic services: skilled nursing care and supportive care to patients whose primary need is for availability of skilled nursing care on an extended basis
Special Seismic Certifications	Components that require special seismic certification in accordance with the CBC 2010 Section 1708A.4.1, or components that require special seismic certification in accordance with ASCE 7-05 Section 13.2.2.
TIO Program	Testing, Inspection, and Observation Program as OSHPD's Website under the Applications, Forms and Instructions tab
TJC	The Joint Commission. Formerly known as the Joint Commission on Accreditation of Healthcare Organizations.
UL	Underwriters Laboratories
UMC	Uniform Mechanical Code
UPC	Uniform Plumbing Code