Office of Statewide Health Planning and Development

Hospital Building Safety Board
Technology Committee

Building Automation Systems
Workshop

Presented by Tim Baer (Frank M. Booth, Inc.)

FMB FRANK M. BOOTH, INC.

Agenda

- Introduction
- Terminology
- Typical HVAC Systems
- Evolution of Mechanical System Control
- BAS Architecture
- Monitoring & Integration
- Reliability & Functionality
- The Future

<u>Terminology (Acronyms)</u>

- **BAS – Building Automation System**
- *BMS – Building Management System*
- *FMS – Facility Management System*
- *FAS – Facility Automation System*
- DDC – Direct Digital Control
- AI, DI, AO, DO (Analog and Digital inputs and outputs)
- **Open Systems (greatly misunderstood and misused term)**

- IT – Internet Technology
- Internet
- intranet
- DSL – Digital Subscriber Line
- VPN – Virtual Private Network
- BACnet
- LonWorks
- Modbus
- Big Data
- The Cloud
- Analytics

Terminology (Acronyms)

- CHWS - Chilled Water System
- HHWS - Heating Hot Water System
- AHU - Air Handler System
- Economizer – Air side “free cooling”
- VAV - Variable Air Volume
- CAV - Constant Air Volume
- VFD – Variable Frequency Drive
- DP – Differential Pressure
- AFMS – Airflow Measuring Station

- FLS – Fire/Life Safety
- FSD – Fire Smoke Damper

- MAP – Master Alarm Panel – (Medical Gas)
- AAP – Area Alarm Panel – (Medical Gas)

- **GS – Geek Speak (results in glazed over look)**

Typical HVAC Systems

- Air Handler System
- Zone Variable/Constant Air Volume Terminal
- Chilled Water System
- Heating Hot Water System

Typical Air Handler System

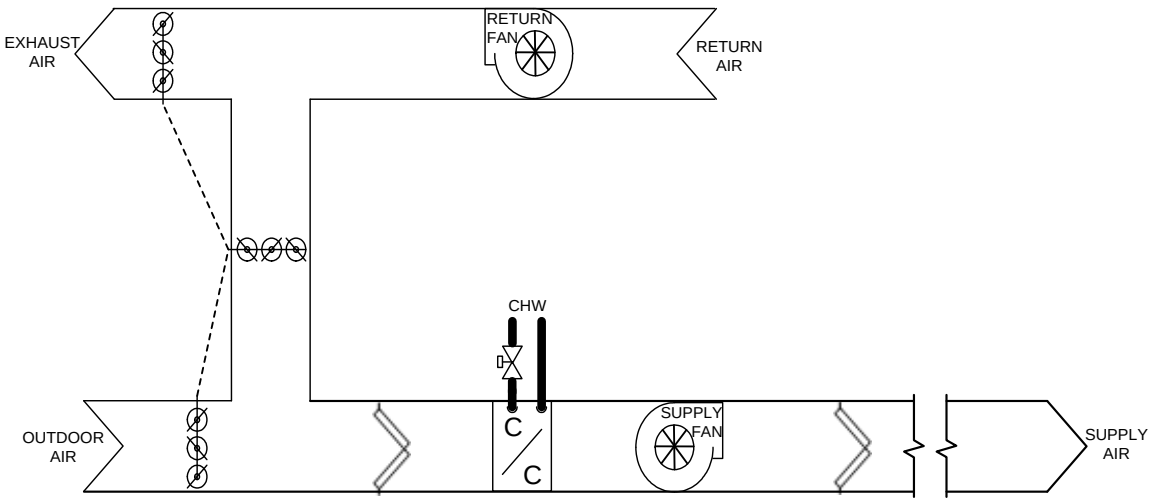

Components

- Supply Fan
- Return Fan
- Chilled Water Coil/Valve
- Economizer
- Air Filtration

Typical Zone System

VAV or CAV with Reheat

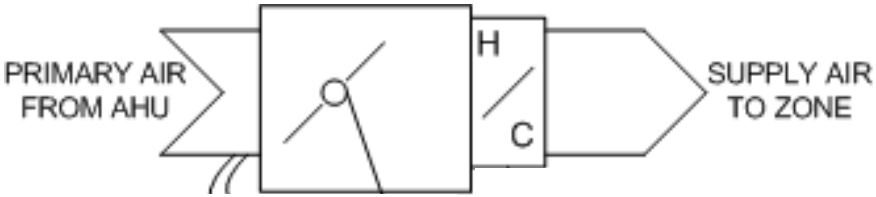

Components

- Space Thermostat
- Air Damper Controller
  - Variable airflow with a VAV
  - Constant airflow with a CAV
- Reheat valve

Typical Chilled Water System

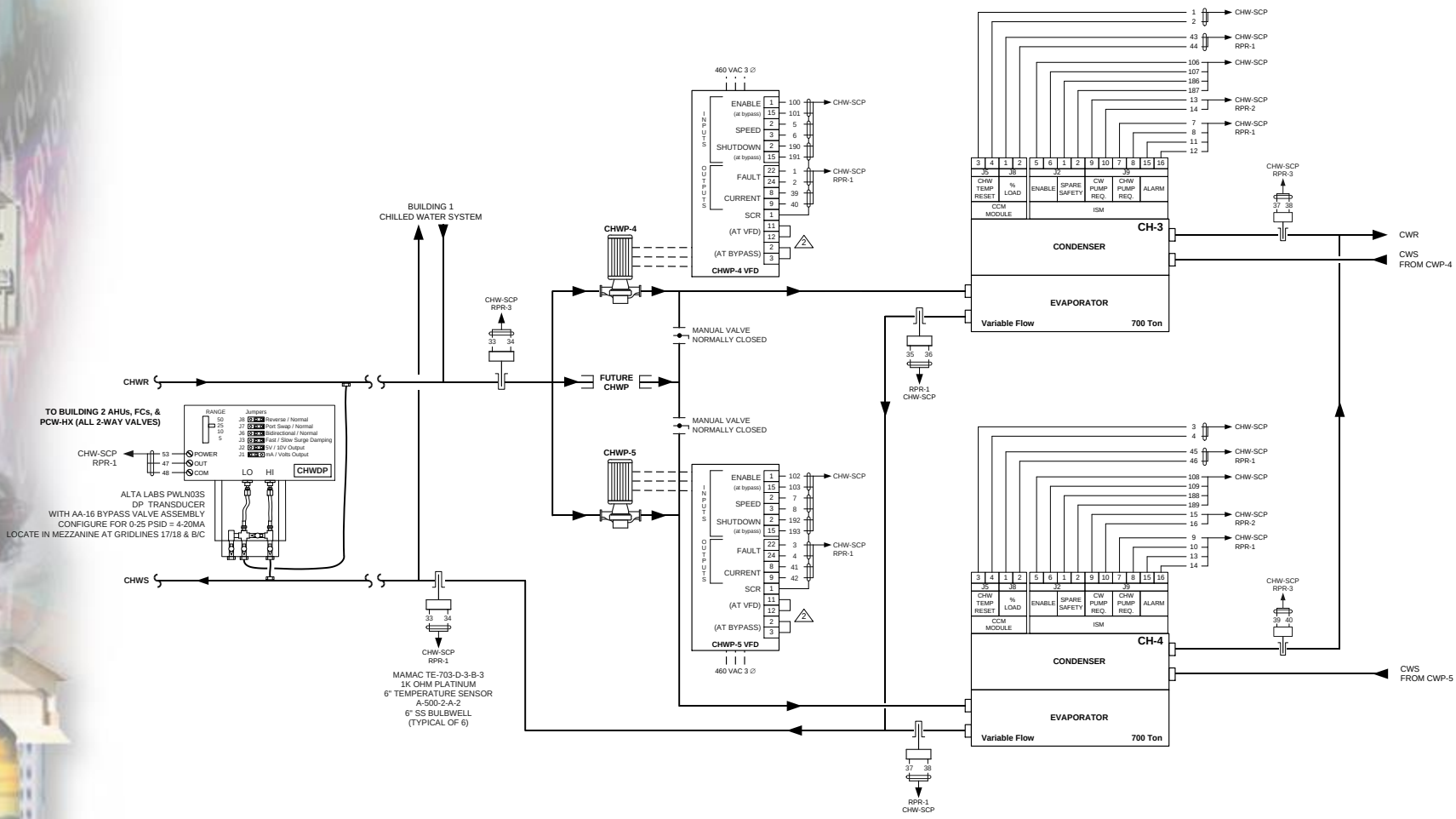

Next Workshop !

Typical Heating Hot Water System

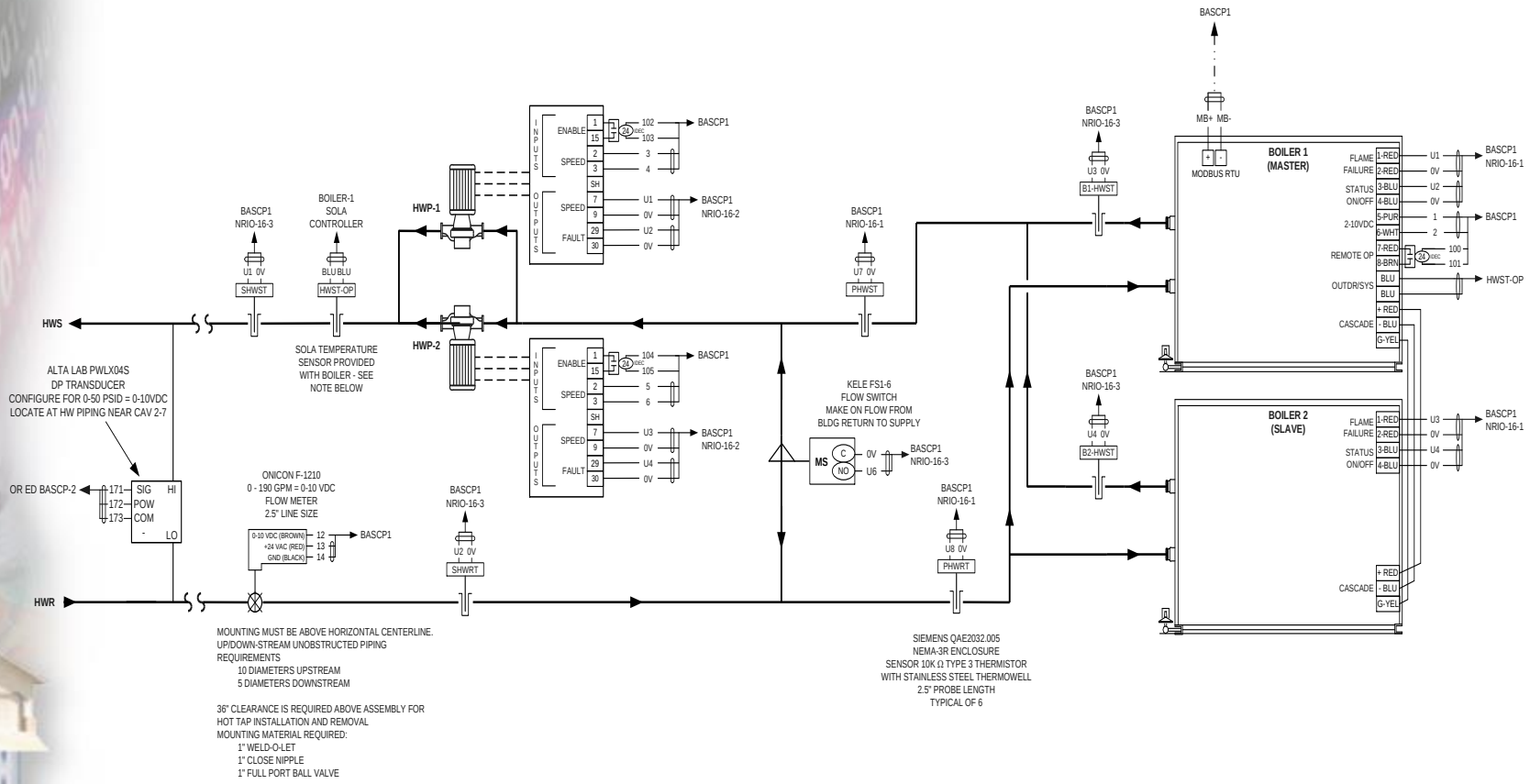

Next Workshop !

Evolution of Mechanical System Control

Brief Overview

- Pneumatic
- Electro-Pneumatic
- Electronic
- Direct Digital (processor based)
- Building Automation Systems

Pneumatic Air Handler Control

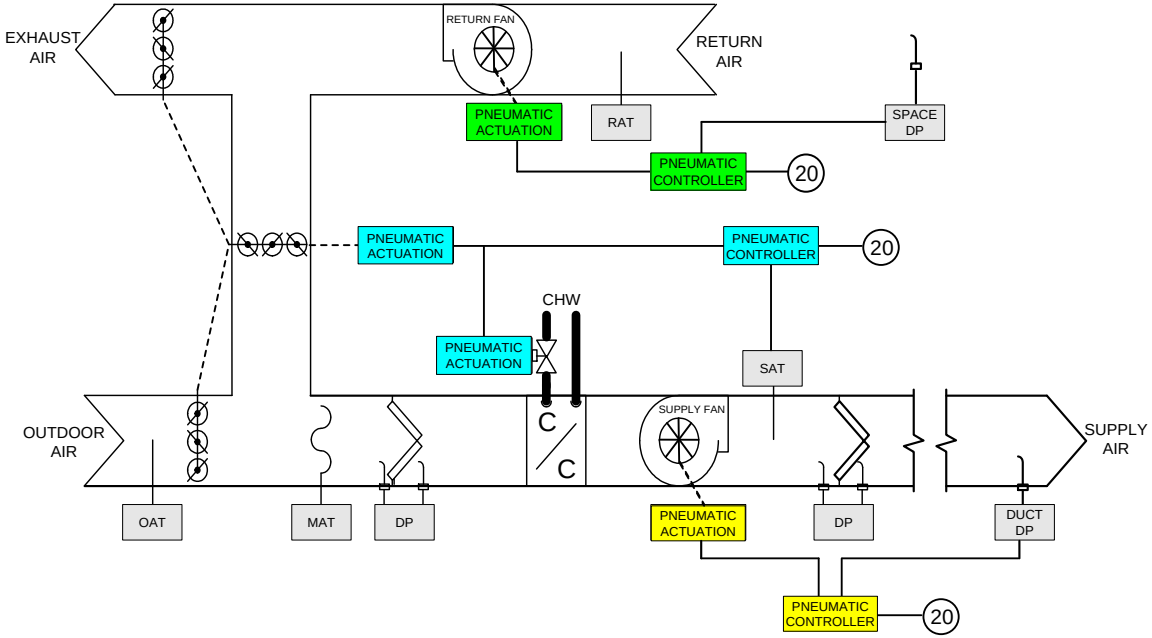

- Local control and indication only
- No remote access or monitoring
- Data recording/trending
  - Manual
  - Chart recorders
- Accuracy of control (relative)

- Much more involved, however this cover the basics

BAS/DDC Air Handler Control

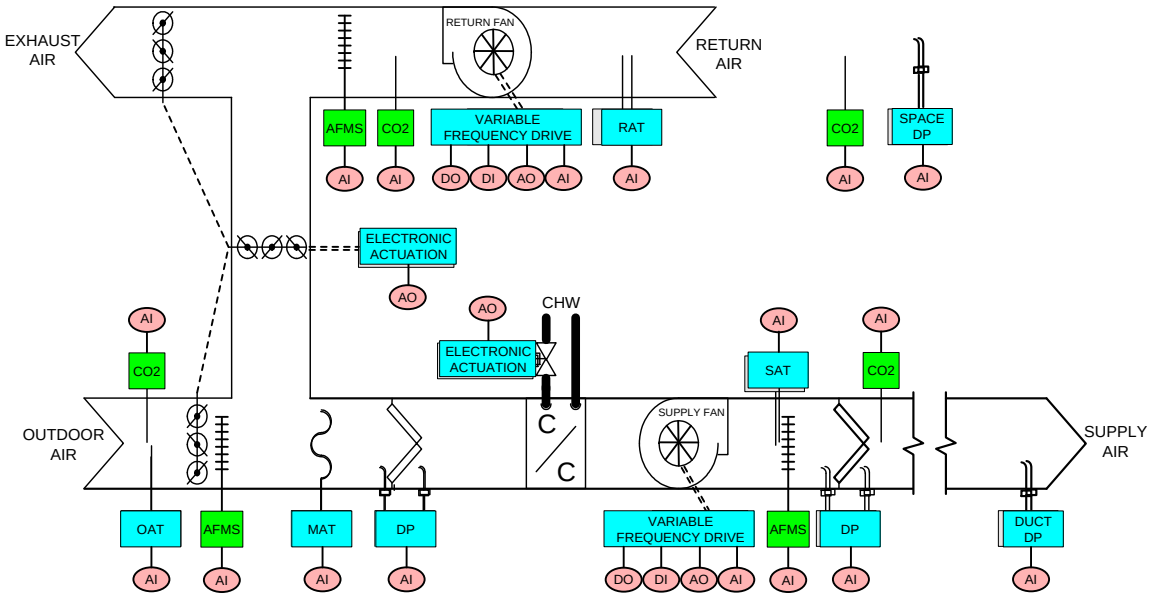

Fast Forward

- Pneumatic control slowly displaced
- DDC / Pneumatic Hybrid
- 99% DDC
- Morphed to BAS
- Stand-alone control
- Remote access or monitoring
- Data trending – virtually unlimited
- Cost effective addition of points

DDC Zone Control

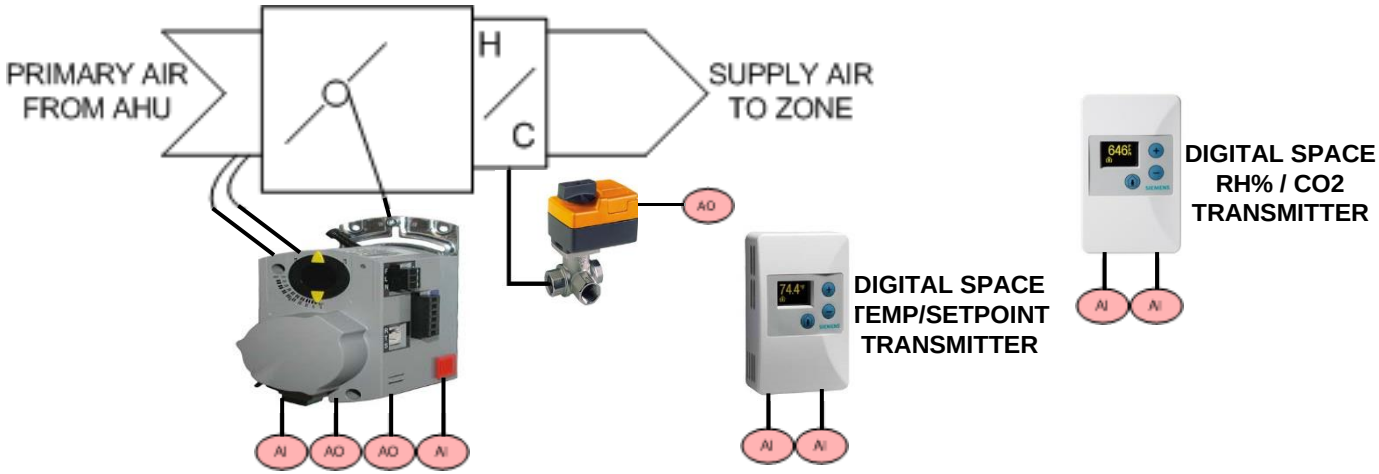

Control

- Thermostat provides space temperature and setpoint
- Controller maintains primary air to satisfy cooling demand
- Reheat valve to satisfy heat demand
- Again, DDC provides:
  - Greater accuracy of control
  - Much more data

Installation

- Plenum rated cable for communication & power
- No conduit in concealed accessible locations
- Similar to pneumatic tubing

Intermission

Had enough?

Have we lost anybody yet?

OK, since we are all “control” savvy now, let’s move on……

BAS Architecture (Customer intranet)

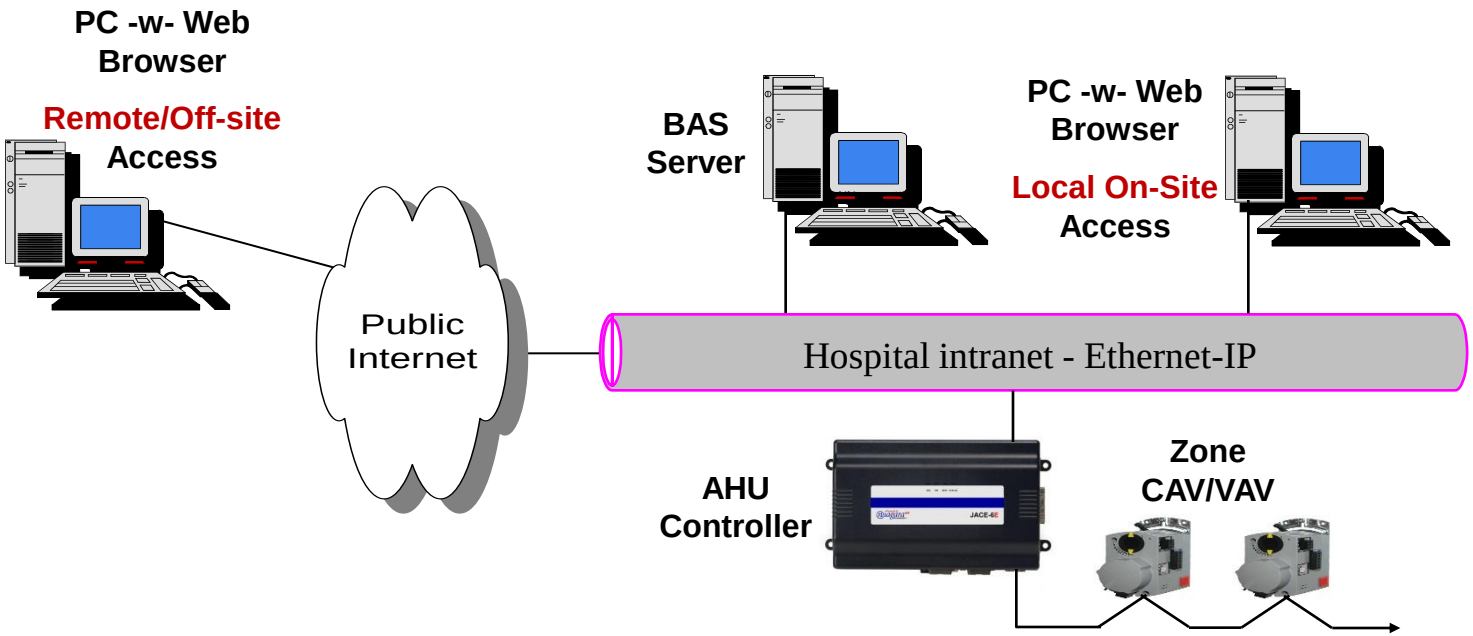

Use of Customer Backbone:

- Simplifies initial installation – no additional physical network
- IT manages single network
- New construction/major retrofit – commissioning challenge
- Increases IT security concerns

BAS Architecture (Dedicated Backbone)

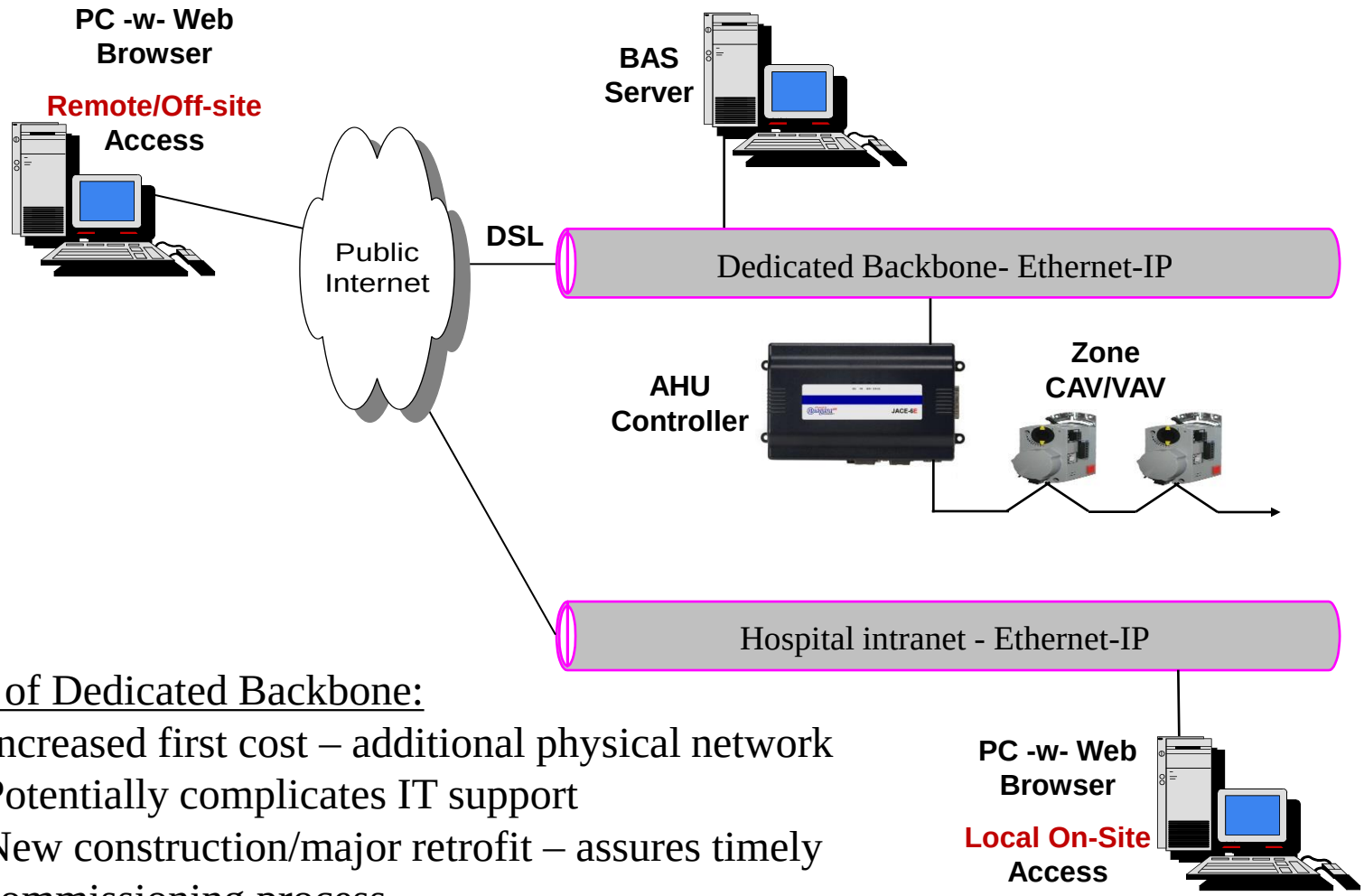

Use of Dedicated Backbone:

- Increased first cost – additional physical network
- Potentially complicates IT support
- New construction/major retrofit – assures timely commissioning process
- Reduces IT security concerns

BAS Architecture – Server

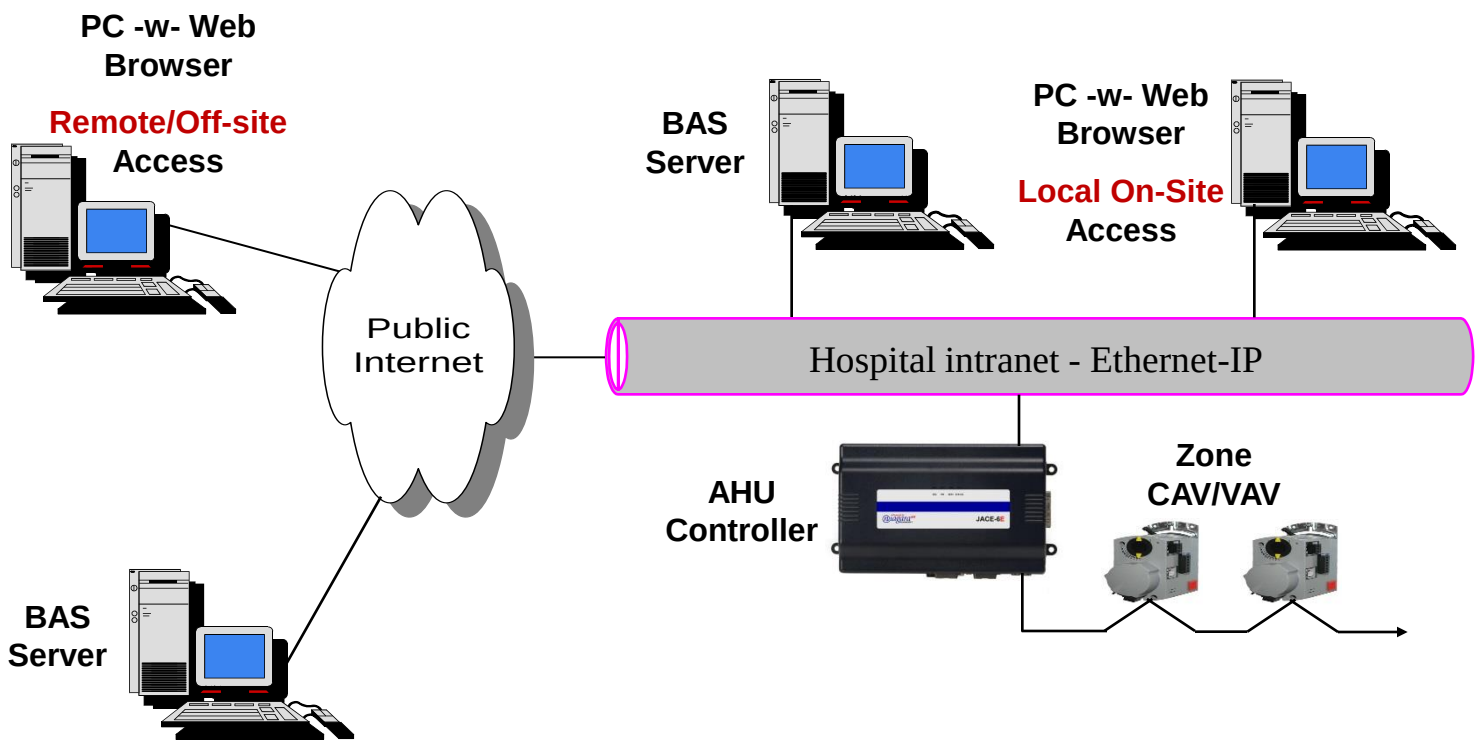

Server Function:

- Limit Server function system tools and data storage
- If Server is removed, system operation must be unaffected
- Server can exist off-site with proper IT communication ports open

Monitoring & Integration

Integration/Connectivity Methods

- Open protocol connections (BACnet, Modbus, Lonworks, etc.)
- Physical connections

Medical Gas Systems

- MAP integration
- Direct to source equipment (VAC, MA, O2, N_2O, N_2, etc.)
- Mixture of physical and BACnet

Fire Alarm / Life Safety Systems

- General, trouble, supervisory alarms
- Typically physical points

Electrical Systems

- Emergency power equipment monitoring (Gen Set, ATSs, etc.)
- Utility power monitoring
- Typically Modbus

Monitoring & Integration

Domestic Water Hot Water

- DHW – High temperature alarm
- Booster pump system integration
- Typically physical points

Medical Systems

- Lab refrigerators
- MRI systems
- Isolation rooms
- Typically physical points

Lighting

- Monitoring and/or control
- Typically BACnet

The possibilities are virtually unlimited with technology available

- How much is enough?
- What is useful to operator/facility engineer?

Reliability & Functionality

- System Design – (non-code driven)
  - Complete Sequence of Operations
  - Complete Commissioning plan
  - Control panel power supply
    - Utility power
    - E power
    - UPS
  - Fail-safe positions
    - Fan systems “ON”
    - CHWV open
    - Economizer position
  - Overrides
    - Failure, maintenance, testing
    - Hardwired in control panels
    - Software via graphics

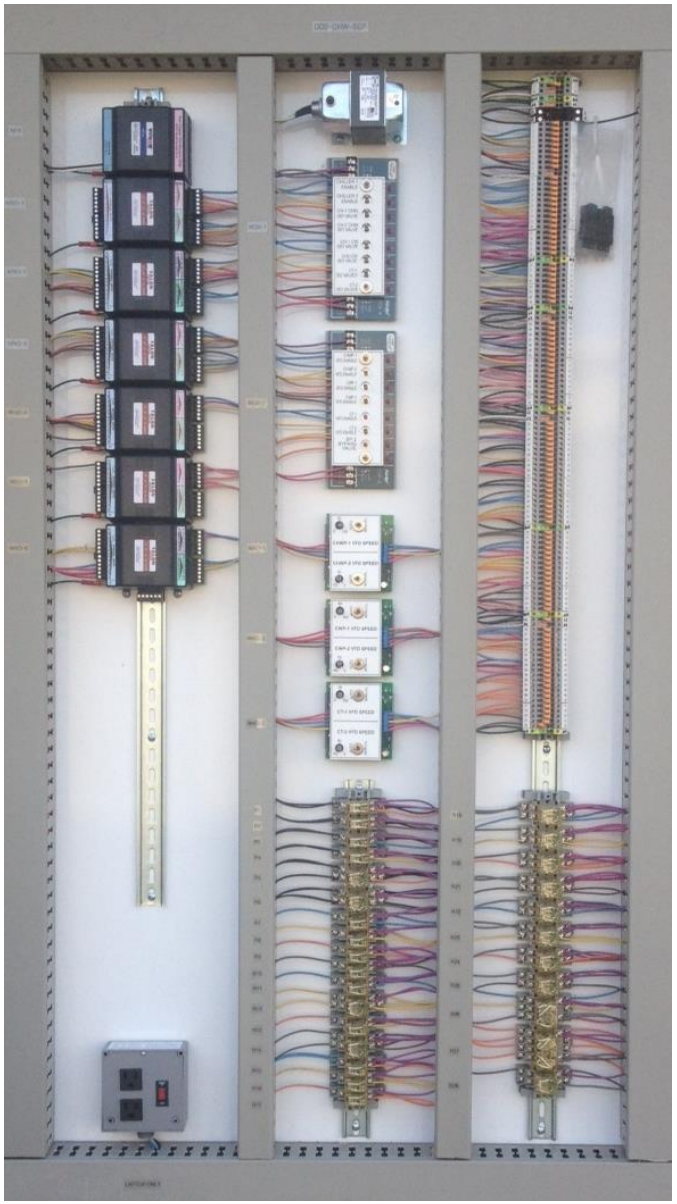

Reliability & Functionality

- System Design
  - Hardwired overrides – panel resident
    - Digital – On/Off functions

    - Analog – Proportional functions

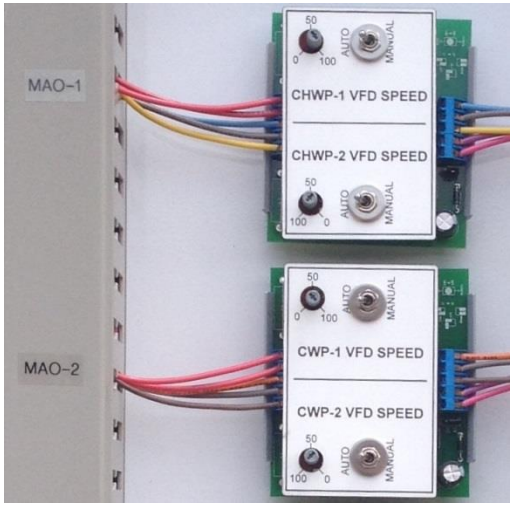

Reliability & Functionality

- System Implementation
  - Complete commissioning
    - Verification of Stand-alone Control
      - Zones
      - AHUs
      - CUP – CHW System & Heating Hot Water System
    - Power loss/restoration
      - All systems/components
    - Failover sequences
      - Fan failures
      - Redundant VFD operation
      - Boiler & Chiller
    - Alarms and Notifications
      - Crucial for operator/engineer
      - Well defined and meaningful

Reliability & Functionality

- Ongoing
  - Alarms and Notifications
    - Understand proper response needed
    - Adjust as needs and desires are identified
  - Facility Personnel (Engineers)
    - Very challenging position
      - Training – Is it enough!
      - Positions require myriad responsibilities
    - Require some testing/knowledge standards?
    - Maintain good relationship with a good system provider
    - Remote connectivity is crucial for facility support
      - Utilized by facility engineer & service provider

The Future of Building Automation

- Wireless
  - Much written about acceptance
  - Factually, it is not widely accepted/used
  - Type of construction challenges
    - Metal framing
    - Wire mesh in stucco/plaster (retrofit)
    - “Crowded” ceilings (conduit, piping, etc.)
  - Fear of failure (unforeseen)
    - No infrastructure to fall back on
  - Technology is improving
  - Benefits:
    - Lower first cost (product is higher cost, labor is less)
    - Versatility
  - Where it makes sense:
    - Small commercial office - zones
    - Retail – single zone

The Future of Building Automation

- Mobile access
  - Capability has been here for years
  - Surprising the number of end-users that do not utilize – nor wish to
- Video
  - Monitoring of equipment
  - Similar to security systems today
  - Video analytics – notification/alarm initiation
- Further displacement of old technology
  - Zone Control
    - Tens of thousands of pneumatic zones remain in hundreds of facilities
    - Costly to upgrade
      - Occupied retrofits & infection control requirements = Labor intense
    - One of the most beneficial applications for wireless
- Internet of Everything

Thank you for this opportunity

FMB FRANK M. BOOTH, INC.