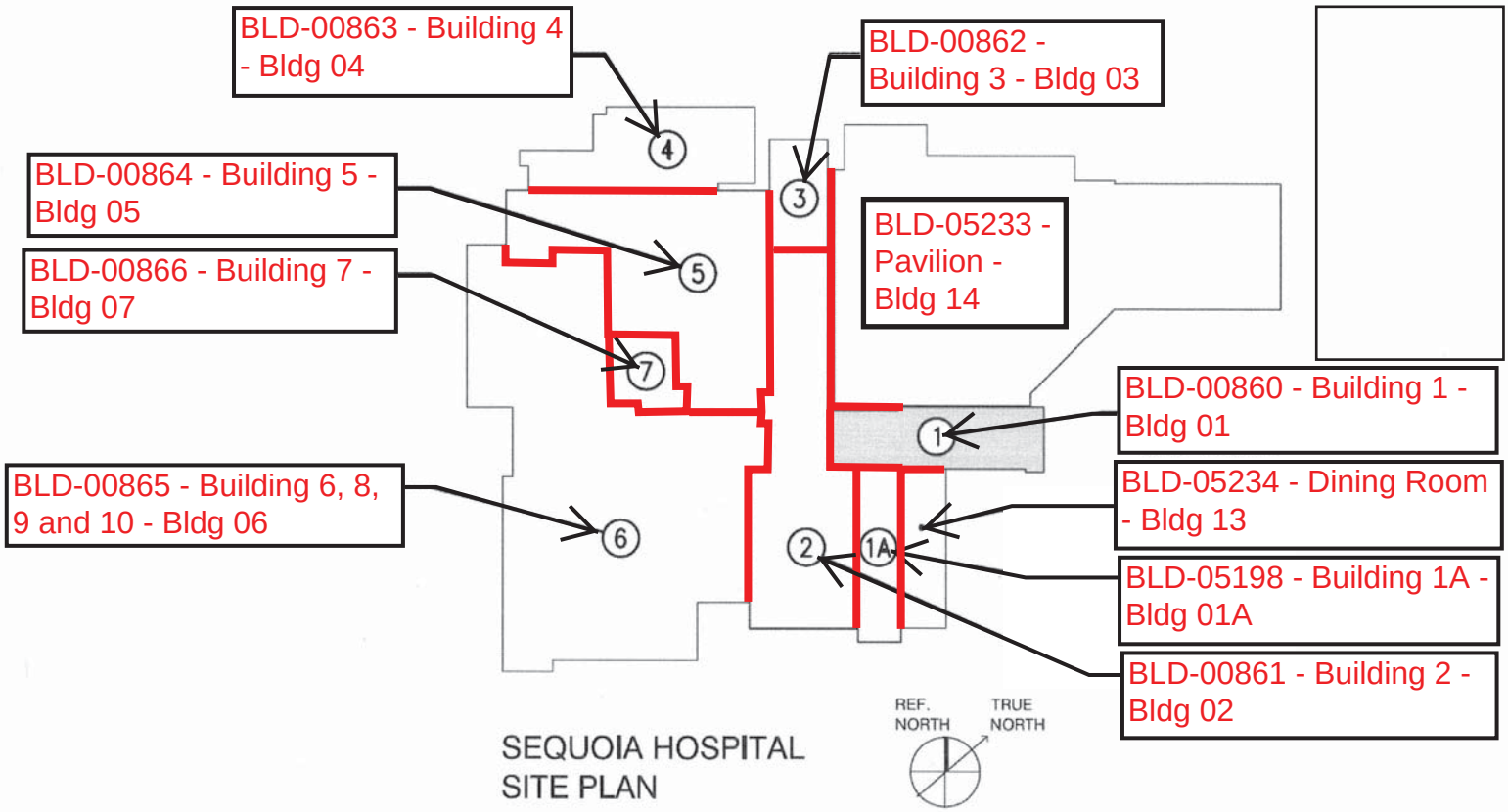Sequoia Hospital
Facility No. 10811