APPLICATION FOR OSHPD SPECIAL SEISMIC CERTIFICATION PREAPPROVAL (OSP)

OFFICE USE ONLY	
APPLICATION #:	OSP – 0162 – 10

OSHPD Special Seismic Certification Preapproval (OSP)

Type: ☐ New ☒ Renewal

Manufacturer Information

Manufacturer: **MTE Corporation / Teal Electronics Corporation**

Manufacturer's Technical Representative: Roderick Harvey

Mailing Address: 10350 Sorrento Valley Rd San Diego, CA 92121

Telephone: 858.366.7540 Email: rod.harvey@teal.com

Product Information

Product Name: Customizable PDU / PCDU / VRDU Power Distribution Units

Product Type: Power Distribution Units

Product Model Number: Various (See Attachment)
(List all unique product identification numbers and/or part numbers)

General Description: Floor Mount & Wall Mount Power Distribution Units. Seismic enhancements made to the test units and modifications required to address the anomalies observed during the tests shall be incorporated into the production units.

Mounting Description: Rigid Floor Mounted & Rigid Wall Mounted

Applicant Information

Applicant Company Name: **SEEStudio, Inc.**

Contact Person: Dan Junker, SE

Mailing Address: 1281 9th Ave. san Diego, CA 92101, Suite 1101

Telephone: 619.606.5058 Email: djunker@seestudioinc.com

I hereby agree to reimburse the Office of Statewide Health Planning and Development review fees in accordance with the California Administrative Code, 2016.

Signature of Applicant: Date: 07-07-16

Title: Principal Engineer Company Name: SEEStudio, Inc.

California Licensed Structural Engineer Responsible for the Engineering and Test Report(s)

Company Name: **SEEStudio, Inc.**

Name: Dan Junker, SE California License Number: S6178

Mailing Address: 1281 9th Ave. san Diego, CA 92101, Suite 1101

Telephone: 619.606.5058 Email: djunker@seestudioinc.com

Supports and Attachments Preapproval

☐ Supports and attachments are preapproved under OPM- _____
(Separate application for OSHPD Preapproval of Manufacturer's Certification (OPM) of Supports and attachments is required)

☒ Supports and attachments are not preapproved

Certification Method

☒ Testing in accordance with: ☒ ICC-ES AC156

☐ Other (Please Specify): _____

Testing Laboratory

Company Name: Clark Dynamic Test Laboratory, Inc.

Contact Name: Robert Francis, General Manager

Mailing Address: 1801 Route 51 Jefferson Hills, PA 15025

Telephone: 412.387.1004 Email: rfrancis@clarktesting.com

Seismic Parameters

Design in accordance with ASCE 7-10 Chapter 13: ☒ Yes ☐ No

Design Basis of Equipment or Components (F_p/W_p) = 1.5

S_{DS} (Design spectral response acceleration at short period, g) = 2.00

a_p (In-structure equipment or component amplification factor) = 2.5

R_p (Equipment or component response modification factor) = 6.0

Ω_0 (System overstrength factor) = 2.0

I_p (Importance factor) = 1.5

z/h (Height factor ratio) = 1.0

Equipment or Component Natural Frequencies (Hz) = See Attachment

Overall dimensions and weight (or range thereof) = See Attachment

Equipment or Components @ grade designed in accordance with ASCE 7-10 Chapter 15: ☐ Yes ☒ No

Design Basis of Equipment or Components (V/W) = _____

S_{DS} (Design spectral response acceleration at short period, g) = _____

S_{D1} (Design spectral response acceleration at 1 second period, g) = _____

R (Response modification coefficient) = _____

Ω_0 (System overstrength factor) = _____

C_d (Deflection amplification factor) = _____

I_p (Importance factor) = 1.5

Height to Center of Gravity above base = _____

Equipment or Component Natural Frequencies (Hz) = _____

Overall dimensions and weight (or range thereof) = _____

Tank(s) designed in accordance with ASME BPVC, 2015: ☐ Yes ☒ No

List of Attachments Supporting Special Seismic Certification

☒ Test Report(s) ☐ Drawings ☐ Calculations ☐ Manufacturer's Catalog

☒ Other(s) (Please Specify): SEES Component Certification Summary

OSHPD Approval (For Office Use Only) – Approval Expires on December 31, 2022

Signature: _____ Date: 9/16/16

Print Name: M. R. Karim Title: SHFR

Special Seismic Certification Valid Up to : S_{DS} (g) = 2.0 z/h = 1.0

Condition of Approval (if applicable): _____

SEE STUDIO
STRUCTURAL & EARTHQUAKE ENGINEERING
www.seestudioinc.com
P: 619.606.5058
E: designgroup@seestudioinc.com

SPECIAL SEISMIC CERTIFICATION

CERTIFIED COMPONENTS

TABLE **1**

MANUFACTURER: MTE Corporation / TEAL Electronics Corporation

MODEL LINE: PDU / PCDU / VRDU

TABLE DESCRIPTION: **Power Distribution Unit Enclosures**

CONSTRUCTION SUMMARY:

Painted galvanized cold-rolled carbon steel enclosure. Certified unit construction shall be identical to cabinet construction of UUT's.

OPTIONS SUMMARY:

Internal components as detailed in following Certified Sub-Component tables.

CERTIFICATION PARAMETERS:

Building Code: CBC 2016

Component Importance Factor: $I_p = 1.5$

S_{DS} at z/h = 1.0: $S_{DS} = 2.0g$

MOUNTING SUMMARY:

Rigid floor mounted. Unit anchorage shall be designed on a project specific basis by SEOR. Installed mounting configuration must be of similar configuration and equivalent strength and stiffness to those tested.

NOTES:

Model Line	Model	Max Dimensions (in)			Weight (lb)	Description	UUT
		Depth	Width	Height			
Group 1 Enclosures	Floor Mount PDU / PCDU / VRDU	20.0	19.0	25.0	500	Minimum	
		…				Custom units can vary in size and weight within the range specified	
		20.5	21.5	56.5	1,195		2
		37.0	37.0	65.5	2,660		1
		…					
		37.0	39.0	74.0	2,660	Maximum	

SEE STUDIO
STRUCTURAL & EARTHQUAKE ENGINEERING
www.seestudioinc.com
P: 619.606.5058
E: designgroup@seestudioinc.com

SPECIAL SEISMIC CERTIFICATION

CERTIFIED COMPONENTS

TABLE **2**

MANUFACTURER: MTE Corporation / TEAL Electronics Corporation

MODEL LINE: Wall Mount

TABLE DESCRIPTION: **Power Distribution Unit Enclosures**

CONSTRUCTION SUMMARY:

Painted galvanized cold-rolled carbon steel enclosure. Certified unit construction shall be identical to cabinet construction of UUT's.

OPTIONS SUMMARY:

Internal components as detailed in following Certified Sub-Component tables.

CERTIFICATION PARAMETERS:

Building Code: CBC 2016

Component Importance Factor: $I_p = 1.5$

S_{DS} at z/h = 1.0: $S_{DS} = 2.0g$

MOUNTING SUMMARY:

Rigid floor mounted. Unit anchorage shall be designed on a project specific basis by SEOR. Installed mounting configuration must be of similar configuration and equivalent strength and stiffness to those tested.

NOTES:

Model Line	Model	Max Dimensions (in)			Weight (lb)	Description	UUT
		Depth	Width	Height			
Group 2 Enclosures	Wall Mount	8.0	21.5	24.0	130	Minimum	
		…				Custom units can vary in size and weight within the range specified	
		9.8	21.5	35.5	130		3
		9.0	30.0	24.0	210		4
		…					
		10.0	40.0	42.0	210	Maximum	

www.seestudioinc.com
P: 619.606.5058
E: designgroup@seestudioinc.com

SPECIAL SEISMIC CERTIFICATION

CERTIFIED SUB-COMPONENTS

TABLE **3**

MANUFACTURER: MTE Corporation / TEAL Electronics Corporation

MODEL LINE: PDU / PCDU / VRDU Floor Mount & Wall Mount Power Distribution Units

TABLE DESCRIPTION: **Capacitors**

CONSTRUCTION SUMMARY:

OPTIONS SUMMARY:

Enclosure types per Tables 1 & 2 are available as custom units with internal component options available as presented herein.

CERTIFICATION PARAMETERS:

Building Code: CBC 2016

Component Importance Factor: $I_p = 1.5$

S_{DS} at z/h = 1.0: $S_{DS} = 2.0g$

MOUNTING SUMMARY:

Mounted in component. Certified mounting shall be identical to mounting of sub-component in UUT's.

NOTES:

Sub-Component	Model	Max Dimensions (in)			Weight (lb)	Description	UUT
		Depth	Width	Height			
ABB *Tl, T2, T2S, S1, S3, S4 T3, TS3, T4, T5*	Minimum	4.0	4.0	5.0	5.0		
	...						
	TIN080TL	4.0	3.0	5.0	5.0		2
	TIN050TL	4.0	3.0	5.0	5.0		3
	TIN080TLS4	4.0	3.0	5.0	5.0		1
	TIN025TL	4.0	3.0	5.0	5.0		1
	S3N150TW	5.0	4.0	7.0	5.0		1
	TS3N150TW	4.0	4.0	6.0	5.0		3
	T3N070TW	4.0	4.0	6.0	5.0		4
	T4N250BW	6.0	5.0	8.0	5.0		3
	T5N400BW	5.0	6.0	8.0	5.0		1
	...						
	Maximum	6.0	6.0	8.0	5.0		
ABB *S200, S200P, S200U, S200UP, S200UC, S290*	Minimum	3.5	1.0	3.5	2.0		
	...						
	S201-K15	4.0	1.0	3.5	2.0		1
	S201-K1	4.0	1.0	3.5	2.0		1
	S201-K20	4.0	1.0	3.5	2.0		2
	S201-K3	4.0	1.0	3.5	2.0		3
	S201-K50	4.0	1.0	3.5	2.0		1
	S202-K63	4.0	2.0	3.5	2.0		1
	S202-K0.5	4.0	2.0	3.5	2.0		1
	S202-K8	4.0	2.0	3.5	2.0		4
	S203P-K10	4.0	3.0	3.5	2.0		1
	S281UC-K2	4.0	1.0	3.5	2.0		3
	S202U-K13	4.0	2.0	3.5	2.0		4
	S203U-K10	4.0	3.0	3.5	2.0		1
	S203U-K50	4.0	3.0	3.5	2.0		1
	...						
	Maximum	4.0	4.0	3.5	2.0		

SEE STUDIO
STRUCTURAL & EARTHQUAKE ENGINEERING
www.seestudioinc.com
P: 619.606.5058
E: designgroup@seestudioinc.com

SPECIAL SEISMIC CERTIFICATION

CERTIFIED SUB-COMPONENTS

TABLE **3**

MANUFACTURER: MTE Corporation / TEAL Electronics Corporation

MODEL LINE: PDU / PCDU / VRDU Floor Mount & Wall Mount Power Distribution Units

TABLE DESCRIPTION: **Capacitors**

CONSTRUCTION SUMMARY:

CERTIFICATION PARAMETERS:

Building Code: CBC 2016

Component Importance Factor: $I_p = 1.5$

S_{DS} at z/h = 1.0: $S_{DS} = 2.0g$

OPTIONS SUMMARY:

Enclosure types per Tables 1 & 2 are available as custom units with internal component options available as presented herein.

MOUNTING SUMMARY:

Mounted in component. Certified mounting shall be identical to mounting of sub-component in UUT's.

NOTES:

Sub-Component	Model	Max Dimensions (in)			Weight (lb)	Description	UUT
		Depth	Width	Height			
Airpax/ Sensata *LELH,LEG, LEGH,C,IEG*	Minimum	2.0	3.0	2.0	1.5		
	…						
	LELEH11116250.0L	3.0	4.0	3.0	2.0		1
	LEG616310.001	2.0	4.0	3.0	2.0		1
	…						
	Maximum	3.0	4.0	3.0	2.0		
Bussmann *MDA,FNG, FNQR,FWH, MDA,KTK, KLM*	Minimum	0.5 Diam.		1.0	0.2		
	…						
	MDA 1.0	0.5 Diam.		1.0	1.0		2
	FNQ-30.0	0.5 Diam.		1.5	0.2		2,4
	FNQ 2.0	0.5 Diam.		1.5	0.2		1
	FNQ-R-1 1/2	0.5 Diam.		1.5	0.2		3
	FWH400A	1.5 Diam.		4.3	1.0		1
	KLM-1	0.5 Diam.		1.5	0.2		3
	MDA .5	0.7 Diam.		1.3	0.2		2
	MDA 2.0	0.7 Diam.		1.3	0.2		
	MDA-1/4	0.7 Diam.		1.3	0.2		1
	KTK-1/8	0.5 Diam.		1.5	0.2		1
	…						
	Maximum	1.5 Diam.		4.3	1.0		
Cutler Hammer *EHD,ED, EDH, EDC, FDB,FD,HFD, FDC*	Minimum	3.0	4.0	6.0	5.0		
	…						
	EHD3080	3.0	4.0	6.0	5.0		1
	FDB3030-U55	3.0	4.0	6.0	5.0		1
	…						
	Maximum	3.0	4.0	6.0	5.0		

SEE STUDIO
STRUCTURAL & EARTHQUAKE ENGINEERING
www.seestudioinc.com
P: 619.606.5058
E: designgroup@seestudioinc.com

SPECIAL SEISMIC CERTIFICATION

CERTIFIED SUB-COMPONENTS

TABLE **3**

MANUFACTURER: MTE Corporation / TEAL Electronics Corporation

MODEL LINE: PDU / PCDU / VRDU Floor Mount & Wall Mount Power Distribution Units

TABLE DESCRIPTION: **Capacitors**

CONSTRUCTION SUMMARY:

CERTIFICATION PARAMETERS:

Building Code: CBC 2016

Component Importance Factor: $I_p = 1.5$

S_{DS} at z/h = 1.0: $S_{DS} = 2.0g$

OPTIONS SUMMARY:

Enclosure types per Tables 1 & 2 are available as custom units with internal component options available as presented herein.

MOUNTING SUMMARY:

Mounted in component. Certified mounting shall be identical to mounting of sub-component in UUT's.

NOTES:

Sub-Component	Model	Max Dimensions (in)			Weight (lb)	Description	UUT
		Depth	Width	Height			
Shawmut *AJT*	0273.100H	0.25 Diam.		0.4	0.1		1
Square D *QOU, TYPE UL489*	Minimum	3.0	1.0	2.0	2.0		
	…						
	QOU350	3.0	2.0	2.0	2.0		1
	QOU30001	3.0	2.0	2.0	2.0		1
	QOU210	3.0	2.0	2.0	2.0		1
	60110 TYPE UL489	3.0	1.0	4.0	2.0		1
	…						
	Maximum	3.0	3.0	4.0	2.0		
WEBER/ SCHURTER *AS 168X*	Minimum	3.0	0.7	0.3	2.0		
	…						
	AS168-X-CB-3G	3.0	3.0	4.0	2.0		1
	AS168-X-CB-1G	3.0	3.0	4.0	2.0		1
	…						
	Maximum	3.0	3.0	4.0	2.0		
Mallory *CGS*	CGS433U040X5C	3.0 Diam.		5.2	2.0		1
Panasonic ECQE	ECQ-E2224KS	0.5	0.6	1.3	0.2		1
Cornell Dubilier Electronics *500-943C*	Minimum	0.3 Diameter		2	0.5		
	…						
	500C103T050AC2B	1.3 Diam.		4.2	1.0		1
	5984-940C16P47K-F	3.0 Diam.		6	3.0		1
	…						
	Maximum	3.0 Diam.		6	3.0		
AVX FFVA	FFV16-9471-A	3.3 Diam.		2.5	3.0		1

SEE STUDIO
STRUCTURAL & EARTHQUAKE ENGINEERING
www.seestudioinc.com
P: 619.606.5058
E: designgroup@seestudioinc.com

SPECIAL SEISMIC CERTIFICATION

CERTIFIED SUB-COMPONENTS

TABLE **4**

MANUFACTURER: MTE Corporation / TEAL Electronics Corporation

MODEL LINE: PDU / PCDU / VRDU Floor Mount & Wall Mount Power Distribution Units

TABLE DESCRIPTION: **Contactors / Relays**

CONSTRUCTION SUMMARY:

CERTIFICATION PARAMETERS:

Building Code: CBC 2016

Component Importance Factor: I_p = 1.5

S_{DS} at z/h = 1.0: S_{DS} = 2.0g

OPTIONS SUMMARY:

Enclosure types per Tables 1 & 2 are available as custom units with internal component options available as presented herein.

MOUNTING SUMMARY:

Mounted in component. Certified mounting shall be identical to mounting of sub-component in UUT's.

NOTES:

Sub-Component	Model	Max Dimensions (in)			Weight (lb)	Description	UUT
		Depth	Width	Height			
ABB *CA,CAL,CC, CM-PS,AL, AE,AF*	Minimum	1.0	1.0	3.0	0.5		
	…						
	CAL5-11	3.0	1.0	3.0	1.0		3
	ISVR430885R1300	1.0	4.0	4.0	0.5		1
	A26-30-10-84	4.0	3.0	4.0	5.0		1
	A9-30-10-84	3.0	2.0	3.0	5.0		1
	AE30-30-11-81	4.0	3.0	5.0	5.0		1
	AF300-30-11-72	12.0	7.0	8.0	15.0		1
	A63-30-11-84	5.0	3.0	5.0	5.0		3
	…						
	Maximum	14.0	8.5	10.0	15.0		
Bender *SED140*	925 104	2.0	3.0	5.0	2.0		1
Cutler Hammer/ Eaton *C25, Freedom*	Minimum	3.0	1.5	3.3	2.0		
	…						
	C25ENF440A	3.3	2.0	2.5	2.0		1
	C25xxx	3.3	2.0	2.5	2.0		1
	CE15HN2AB	4.25	4.0	5.0	7.0		1
	…						
	Maximum	7.0	4.6	6.0	8.0		
Deltrol *900*	20240-83	4.0	2.5	3.0	1.0		1
IDEC *RR*	Minimum	1.5	1.5	2.0	0.2		
	…						
	RRIBA-USA24V	1.5	1.5	2.0	0.2		1
	RR2BA-UDC12V	1.5	1.5	2.0	0.2		3
	…						
	Maximum	1.5	1.5	2.0	0.2		
SSAC *RLM*	RLM611	4.5	3.2	1.5	1.0		1
Transtronics *BVUPS*	BVUPS12FPA-10	3.0	2.0	3.0	0.2		3

SEE STUDIO
STRUCTURAL & EARTHQUAKE ENGINEERING
www.seestudioinc.com
P: 619.606.5058
E: designgroup@seestudioinc.com

SPECIAL SEISMIC CERTIFICATION

CERTIFIED SUB-COMPONENTS

TABLE **5**

MANUFACTURER: MTE Corporation / TEAL Electronics Corporation

MODEL LINE: PDU / PCDU / VRDU Floor Mount & Wall Mount Power Distribution Units

TABLE DESCRIPTION: **Surge Suppressors**

CONSTRUCTION SUMMARY:

OPTIONS SUMMARY:

Enclosure types per Tables 1 & 2 are available as custom units with internal component options available as presented herein.

CERTIFICATION PARAMETERS:

Building Code: CBC 2016

Component Importance Factor: $I_p = 1.5$

S_{DS} at z/h = 1.0: $S_{DS} = 2.0g$

MOUNTING SUMMARY:

Mounted in component. Certified mounting shall be identical to mounting of sub-component in UUT's.

NOTES:

Sub-Component	Model	Max Dimensions (in)			Weight (lb)	Description	UUT
		Depth	Width	Height			
ABB *OVR*	Minimum	3.0	0.75	4.0	0.5		
	…						
	OVR 40-440s p	3.0	0.75	4.0	0.5		1
	OVR40275SPTS	3.0	0.75	4.0	0.5		1
	…						
	Maximum	3.0	0.75	4.0	0.5		
Citel *DS*	DS250VGT-300	3.0	1.5	3.0	0.5		3
Phoenix Contact *VAL-MS BE,FM*	Minimum	4.0	1.0	2.0	1.0		
	…						
	VAL-MS 230 IT S	4.0	1.0	2.0	1.0		2
	VAL-MS 500 ST	4.0	1.0	2.0	1.0		4
	VAL-MS BE	4.0	1.0	2.0	1.0		4
	VAL-MS BE/FM	4.0	1.0	2.0	1.0		1
	…						
	Maximum	4.0	1.0	2.0	1.0		
Panasonic *V Series*	ERZ-V07D101	0.3 Diam.		0.2	0.1		1

SEE STUDIO
STRUCTURAL & EARTHQUAKE ENGINEERING
www.seestudioinc.com
P: 619.606.5058
E: designgroup@seestudioinc.com

SPECIAL SEISMIC CERTIFICATION

CERTIFIED SUB-COMPONENTS

TABLE **6**

MANUFACTURER: MTE Corporation / TEAL Electronics Corporation

MODEL LINE: PDU / PCDU / VRDU Floor Mount & Wall Mount Power Distribution Units

TABLE DESCRIPTION: **Filters**

CONSTRUCTION SUMMARY:

CERTIFICATION PARAMETERS:

Building Code: CBC 2016

Component Importance Factor: $I_p = 1.5$

S_{DS} at z/h = 1.0: $S_{DS} = 2.0g$

OPTIONS SUMMARY:

Enclosure types per Tables 1 & 2 are available as custom units with internal component options available as presented herein.

MOUNTING SUMMARY:

Mounted in component. Certified mounting shall be identical to mounting of sub-component in UUT's.

NOTES:

Sub-Component	Model	Max Dimensions (in)			Weight (lb)	Description	UUT
		Depth	Width	Height			
Radius Power *RP*	Minimum	4.0	2.5	2.0	1.0		
	…						
	RP300-200-22N	15.8	6.7	4.5	20.0		1
	RP300-250-22-S	15.8	6.7	4.5	20.0		1
	…						
	Maximum	15.8	6.7	4.5	20.0		
Radius Power *DSC*	DSCI000-4	4.0	2.5	2.0	1.0		1
MTE *N,RLX*	Minimum	3.5	3.5	6.25	11.0		
	…						
	RLX-0014-008	3.5	6.0	6.5	30.0		1
	N-281	12.0	8.0	7.25	30.0		1
	N-364	12.0	12.0	7.25	11.0		1
	RLX-0014-009	6.0	3.5	6.25	25.0		1
	N-312	12.0	12.0	7.25	11.0		1
	…						
	Maximum	12.0	12.0	7.25	30.0		
TEAL	Tealwave	3.25	5.5	6.9	2.5		4

SEE STUDIO
STRUCTURAL & EARTHQUAKE ENGINEERING
www.seestudioinc.com
P: 619.606.5058
E: designgroup@seestudioinc.com

SPECIAL SEISMIC CERTIFICATION

CERTIFIED SUB-COMPONENTS

TABLE **7**

MANUFACTURER: MTE Corporation / TEAL Electronics Corporation

MODEL LINE: PDU / PCDU / VRDU Floor Mount & Wall Mount Power Distribution Units

TABLE DESCRIPTION: **Switches**

CONSTRUCTION SUMMARY:

OPTIONS SUMMARY:

Enclosure types per Tables 1 & 2 are available as custom units with internal component options available as presented herein.

CERTIFICATION PARAMETERS:

Building Code: CBC 2016

Component Importance Factor: $I_p = 1.5$

S_{DS} at z/h = 1.0: $S_{DS} = 2.0g$

MOUNTING SUMMARY:

Mounted in component. Certified mounting shall be identical to mounting of sub-component in UUT's.

NOTES:

Sub-Component	Model	Max Dimensions (in)			Weight (lb)	Description	UUT
		Depth	Width	Height			
Cutler Hammer *E22,E22M*	Minimum	1.0	1.0	1.0	0.2		
	…						
	E22PB3	1.0	2.0	2.0	0.2		3
	E22B2	1.0	2.0	1.0	0.2		1
	E22EB2	1.0	2.0	1.0	0.2		3
	E22LB2	1.0	2.0	3.0	0.2		1
	E22VA1	1.5	1.0	3.0	0.2		1
	…						
	Maximum	1.5	2.0	3.0	0.2		
C&K *TL*	12TL4A2	2.0	0.5	2.0	0.2		1
Square D *40MM*	Minimum	3.5	2.0	2.0	0.2		
	…						
	XB4BS542	3.5	2.0	2.0	0.2		1
	XB4BS8445	3.5	2.0	2.0	0.2		1
	…						
	Maximum	3.5	2.0	2.0	0.2		
KRAUSNAIM *ER 1400,O*	L400USA193600EG	13.2	7.0	5.1	2.0		1
ABB *O,22MM*	Minimum	1.0	1.0	1.0	0.2		
	…						
	OL40WS4PB	7.0	2.0	2.0	3.0		2
	MPD2-22C11L8	2.5	1.5	2.5	0.2		1
	M2SS2-41G01	3.0	1.5	2.0	0.2		1
	…						
	Maximum	15.0	6.0	6.0	20.0		
GE Industrial *30MM*	CR104PBG01R1	2.3 Diam.		2.5	0.2		2

SEE STUDIO
STRUCTURAL & EARTHQUAKE ENGINEERING
www.seestudioinc.com
P: 619.606.5058
E: designgroup@seestudioinc.com

SPECIAL SEISMIC CERTIFICATION

CERTIFIED SUB-COMPONENTS

TABLE **8**

MANUFACTURER: MTE Corporation / TEAL Electronics Corporation

MODEL LINE: PDU / PCDU / VRDU Floor Mount & Wall Mount Power Distribution Units

TABLE DESCRIPTION: **Resistors**

CONSTRUCTION SUMMARY:

OPTIONS SUMMARY:

Enclosure types per Tables 1 & 2 are available as custom units with internal component options available as presented herein.

CERTIFICATION PARAMETERS:

Building Code: CBC 2016

Component Importance Factor: $I_p = 1.5$

S_{DS} at z/h = 1.0: $S_{DS} = 2.0g$

MOUNTING SUMMARY:

Mounted in component. Certified mounting shall be identical to mounting of sub-component in UUT's.

NOTES:

Sub-Component	Model	Max Dimensions (in)			Weight (lb)	Description	UUT
		Depth	Width	Height			
XICON Passive Components *CF-RC*	*CF-RC*	3.0 Diameter		5.0	0.15		1
OHMITE *270,89*	Minimum	0.75	0.5	0.4	0.2		
	…						
	LIOOJ5KOE	0.75	0.75	6.5	1.0		1
	810F40RE	1.4	0.8	0.4	0.2		1
	…						
	Maximum	3.0	1.5	20.0	1.0		

SEE STUDIO
STRUCTURAL & EARTHQUAKE ENGINEERING
www.seestudioinc.com
P: 619.606.5058
E: designgroup@seestudioinc.com

SPECIAL SEISMIC CERTIFICATION

CERTIFIED SUB-COMPONENTS

TABLE **9**

MANUFACTURER: MTE Corporation / TEAL Electronics Corporation

MODEL LINE: PDU / PCDU / VRDU Floor Mount & Wall Mount Power Distribution Units

TABLE DESCRIPTION: **Indicators**

CONSTRUCTION SUMMARY:

CERTIFICATION PARAMETERS:

Building Code: CBC 2016

Component Importance Factor: $I_p = 1.5$

S_{DS} at z/h = 1.0: $S_{DS} = 2.0g$

OPTIONS SUMMARY:

Enclosure types per Tables 1 & 2 are available as custom units with internal component options available as presented herein.

MOUNTING SUMMARY:

Mounted in component. Certified mounting shall be identical to mounting of sub-component in UUT's.

NOTES:

Sub-Component	Model	Max Dimensions (in)			Weight (lb)	Description	UUT
		Depth	Width	Height			
Cutler Hammer *E22,E22M, 25MM*	Minimum	1.0 Diam.		2.0	0.2		
	…						
	E22H2	1.0 Diam.		2.0	0.2		1
	EXXX	1.0 Diam.		2.0	0.2		1
	…						
	Maximum	1.0 Diam.		2.0	0.2		
Chicago Mini LED *1935,2191*	Minimum	1.5 Diam.		0.4	0.1		
	…						
	19352130	1.5 Diam.		0.6	0.2		1
	2191U7-24V	1.5 Diam.		0.4	0.1		1
	…						
	Maximum	1.5 Diam.		0.6	0.2		
ABB *ML,MC*	Minimum	3.0 Diam.		1.6	0.2		
	…						
	ML1-20GI0L1	3.0 Diam.		1.6	0.2		3
	ML1-20GI0L8	3.0 Diam.		1.6	0.2		2
	…						
	Maximum	3.0 Diam.		1.6	0.2		
Allen Bradley *800F*	Minimum	3.0 Diam.		1.6	0.2		
	…						
	800-FP-P3PN3G	3.0 Diam.		1.6	0.2		4
	800-FP-P5PN3Y	3.0 Diam.		1.6	0.2		1
	…						
	Maximum	3.0 Diam.		1.6	0.2		
VCC Miniature Indicators *CMC*	Minimum	0.3 Diam.		0.33	0.1		
	…						
	CMC321RTP	0.3 Diam.		0.33	0.1		1
	CMC321GTP	0.3 Diam.		0.33	0.1		1
	…						
	Maximum	0.3 Diam.		0.33	0.1		

SEE STUDIO
STRUCTURAL & EARTHQUAKE ENGINEERING
www.seestudioinc.com
P: 619.606.5058
E: designgroup@seestudioinc.com

SPECIAL SEISMIC CERTIFICATION

CERTIFIED SUB-COMPONENTS

TABLE **9**

MANUFACTURER: MTE Corporation / TEAL Electronics Corporation

MODEL LINE: PDU / PCDU / VRDU Floor Mount & Wall Mount Power Distribution Units

TABLE DESCRIPTION: **Indicators**

CONSTRUCTION SUMMARY:

OPTIONS SUMMARY:

Enclosure types per Tables 1 & 2 are available as custom units with internal component options available as presented herein.

CERTIFICATION PARAMETERS:

Building Code: CBC 2016

Component Importance Factor: $I_p = 1.5$

S_{DS} at z/h = 1.0: $S_{DS} = 2.0g$

MOUNTING SUMMARY:

Mounted in component. Certified mounting shall be identical to mounting of sub-component in UUT's.

NOTES:

Sub-Component	Model	Max Dimensions (in)			Weight (lb)	Description	UUT
		Depth	Width	Height			
Dialight *95 Series*	95-5763-09-311	0.63 Diam.		2.5	0.1		1
Newhaven *NHD*	NHD-240128WG-BT	4.0	6.0	1.0	1.0		1

SEE STUDIO
STRUCTURAL & EARTHQUAKE ENGINEERING
www.seestudioinc.com
P: 619.606.5058
E: designgroup@seestudioinc.com

SPECIAL SEISMIC CERTIFICATION

CERTIFIED SUB-COMPONENTS

TABLE **10**

MANUFACTURER: MTE Corporation / TEAL Electronics Corporation

MODEL LINE: PDU / PCDU / VRDU Floor Mount & Wall Mount Power Distribution Units

TABLE DESCRIPTION: **Control Transformers**

CONSTRUCTION SUMMARY:

OPTIONS SUMMARY:

Enclosure types per Tables 1 & 2 are available as custom units with internal component options available as presented herein.

CERTIFICATION PARAMETERS:

Building Code: CBC 2016

Component Importance Factor: $I_p = 1.5$

S_{DS} at z/h = 1.0: $S_{DS} = 2.0g$

MOUNTING SUMMARY:

Mounted in component. Certified mounting shall be identical to mounting of sub-component in UUT's.

NOTES:

Sub-Component	Model	Max Dimensions (in)			Weight (lb)	Description	UUT
		Depth	Width	Height			
ACME *TA*	TA-83300	4.0	3.0	3.0	4.0		1
Square D *Type T,TF*	Minimum	3.9	3.0	3.0	1.0		
	…						
	9070-T50D19, 50	4.0	4.0	3.0	4.0		1
	9070-T300D19	5.0	5.0	6.0	5.0		1
	9070-T300D40	5.0	5.0	6.0	5.0		3
	9070-TI00D31	4.0	4.0	3.0	4.0		1
	…						
	Maximum	9.0	9.0	9.0	9.0		
Midwest *5SC*	5SC40110201	3.5	2.0	5.0	2.0		1
VCC Miniature Indicators *CMC*	Minimum	2.8	2.5	5.5	3.0		
	…						
	4-49-6634	2.8	2.5	3.0	3.0		1
	4-54-0500	5.25	5.0	6.0	50.0		1
	…						
	Maximum	9.0	11.5	7.7	106		
Hammond	5SC40110201	6.0	5.0	4.0	10.0		1

SEE STUDIO
STRUCTURAL & EARTHQUAKE ENGINEERING
www.seestudioinc.com
P: 619.606.5058
E: designgroup@seestudioinc.com

SPECIAL SEISMIC CERTIFICATION

CERTIFIED SUB-COMPONENTS

TABLE **11**

MANUFACTURER: MTE Corporation / TEAL Electronics Corporation

MODEL LINE: PDU / PCDU / VRDU Floor Mount & Wall Mount Power Distribution Units

TABLE DESCRIPTION: **Transformers**

CONSTRUCTION SUMMARY:

OPTIONS SUMMARY:

Enclosure types per Tables 1 & 2 are available as custom units with internal component options available as presented herein.

CERTIFICATION PARAMETERS:

Building Code: CBC 2016

Component Importance Factor: $I_p = 1.5$

S_{DS} at z/h = 1.0: $S_{DS} = 2.0g$

MOUNTING SUMMARY:

Mounted in component. Certified mounting shall be identical to mounting of sub-component in UUT's.

NOTES:

Sub-Component	Model	Max Dimensions (in)			Weight (lb)	Description	UUT
		Depth	Width	Height			
TEAL Electronics *072,073*	Minimum	8.5	5.25	4.4	15.0		
	…						
	0720401	8.5	7.5	6.0	60		4
	0730490	13.0	18.0	23.0	680		2
	0730539	18.0	24.0	24.0	1000		1
	…						
	Maximum	18.0	24.0	24.0	1000.0		

SEE STUDIO
STRUCTURAL & EARTHQUAKE ENGINEERING
www.seestudioinc.com
P: 619.606.5058
E: designgroup@seestudioinc.com

SPECIAL SEISMIC CERTIFICATION

CERTIFIED SUB-COMPONENTS

TABLE **12**

MANUFACTURER: MTE Corporation / TEAL Electronics Corporation

MODEL LINE: PDU / PCDU / VRDU Floor Mount & Wall Mount Power Distribution Units

TABLE DESCRIPTION: **Sensors**

CONSTRUCTION SUMMARY:

OPTIONS SUMMARY:

Enclosure types per Tables 1 & 2 are available as custom units with internal component options available as presented herein.

CERTIFICATION PARAMETERS:

Building Code: CBC 2016

Component Importance Factor: $I_p = 1.5$

S_{DS} at z/h = 1.0: $S_{DS} = 2.0g$

MOUNTING SUMMARY:

Mounted in component. Certified mounting shall be identical to mounting of sub-component in UUT's.

NOTES:

Sub-Component	Model	Max Dimensions (in)			Weight (lb)	Description	UUT
		Depth	Width	Height			
Honeywell *T775A/B/M*	T775B2040	3.0	3.0	9.0	5.0		1
Building Automation *BAPI*	BA/T10K-H305D-WP	9.0	3.0	4.5	2.0		1

SEE STUDIO
STRUCTURAL & EARTHQUAKE ENGINEERING
www.seestudioinc.com
P: 619.606.5058
E: designgroup@seestudioinc.com

SPECIAL SEISMIC CERTIFICATION

CERTIFIED SUB-COMPONENTS

TABLE **13**

MANUFACTURER: MTE Corporation / TEAL Electronics Corporation

MODEL LINE: PDU / PCDU / VRDU Floor Mount & Wall Mount Power Distribution Units

TABLE DESCRIPTION: **Panel Control Boards**

CONSTRUCTION SUMMARY:

OPTIONS SUMMARY:

Enclosure types per Tables 1 & 2 are available as custom units with internal component options available as presented herein.

CERTIFICATION PARAMETERS:

Building Code: CBC 2016

Component Importance Factor: $I_p = 1.5$

S_{DS} at z/h = 1.0: $S_{DS} = 2.0g$

MOUNTING SUMMARY:

Mounted in component. Certified mounting shall be identical to mounting of sub-component in UUT's.

NOTES:

Sub-Component	Model	Max Dimensions (in)			Weight (lb)	Description	UUT
		Depth	Width	Height			
Teal Electronics *080*	Minimum	2.0	1.0	1.0	1.0		
	...						
	0800290	12.0	9.0	2.0	5.0		1
	0800337	15.0	15.0	3.0	8.0		1
	0800346	2.0	3.0	1.0	3.0		1
	0800335-01	4.0	3.0	1.0	1.0		1
	...						
	Maximum	15.0	15.0	3.0	8.0		

www.seestudioinc.com
P: 619.606.5058
E: designgroup@seestudioinc.com

SPECIAL SEISMIC CERTIFICATION

CERTIFIED SUB-COMPONENTS

TABLE **14**

MANUFACTURER: MTE Corporation / TEAL Electronics Corporation

MODEL LINE: PDU / PCDU / VRDU Floor Mount & Wall Mount Power Distribution Units

TABLE DESCRIPTION: **VFD's, Power Monitors, Inductors, Fans**

CONSTRUCTION SUMMARY:

OPTIONS SUMMARY:

Enclosure types per Tables 1 & 2 are available as custom units with internal component options available as presented herein.

CERTIFICATION PARAMETERS:

Building Code: CBC 2016

Component Importance Factor: $I_p = 1.5$

S_{DS} at z/h = 1.0: $S_{DS} = 2.0g$

MOUNTING SUMMARY:

Mounted in component. Certified mounting shall be identical to mounting of sub-component in UUT's.

NOTES:

Sub-Component	Model	Max Dimensions (in)			Weight (lb)	Description	UUT
		Depth	Width	Height			
Yaskawa *CIMR-F/V VFD*	Minimum	4.0	4.25	6.0	3.0		
	…						
	CIMRF7U41100061	30.5	20.0	14.2	250.0		1
	CIMR-VU4A0002FA	4.0	4.25	6.0	3.0		1
	…						
	Maximum	30.5	20.0	24.0	250.0		
Teal Electronics *0810748,49, 50 Power Monitor*	Minimum	5.6	4.7	2.6	2.0		
	…						
	0810748	5.6	8.1	2.6	2.0		1
	0810749	5.6	4.7	4.7	5.0		1
	…						
	Maximum	5.6	8.1	4.7	2.0		
Pacific Tran *Inductor*	26835	7.0	13.0	8.0	25.0		1
EBM *400N Series Fans*	4660N	3.0	3.0	1.5	1.0		1
NMB *3115FS Fans*	3115FS23TB30AOO	3.0	3.0	1.5	1.0		2
Orion *Fans*	OA172SAPL	7.0	6.0	1.5	2.0		1
Tronics *Fans*	F6025-H	2.4	2.4	1.0	1.0		1
Comair *Fans*	MR77	7.0	6.0	2.0	2.0		1

SEE STUDIO
STRUCTURAL & EARTHQUAKE ENGINEERING
www.seestudioinc.com
P: 619.606.5058
E: designgroup@seestudioinc.com

SPECIAL SEISMIC CERTIFICATION

CERTIFIED SUB-COMPONENTS

TABLE **15**

MANUFACTURER: MTE Corporation / TEAL Electronics Corporation

MODEL LINE: PDU / PCDU / VRDU Floor Mount & Wall Mount Power Distribution Units

TABLE DESCRIPTION: **UPS / Batteries / Power Supplies**

CONSTRUCTION SUMMARY:

OPTIONS SUMMARY:

Enclosure types per Tables 1 & 2 are available as custom units with internal component options available as presented herein.

CERTIFICATION PARAMETERS:

Building Code: CBC 2016

Component Importance Factor: $I_p = 1.5$

S_{DS} at z/h = 1.0: $S_{DS} = 2.0g$

MOUNTING SUMMARY:

Mounted in component. Certified mounting shall be identical to mounting of sub-component in UUT's.

NOTES:

Sub-Component	Model	Max Dimensions (in)			Weight (lb)	Description	UUT
		Depth	Width	Height			
Eaton/ Powerware *5115,9140*	Minimum	10.0	6.0	5.25	30.0		
	…						
	PW51151000i	13	6	8	30		1
	103005093-6591	30	19	10.5	255		1
	103004729-6591	28	19	5.25	175		2
	…						
	Maximum	30.0	19.0	10.5	255.0		
Marathon Power *Athlon*	Minimum	20.0	19.0	5.2	70.0		
	…						
	ARMS-3000-02	20.0	19.0	5.2	70.0		2
	EBPR-0014-96	20.0	19.0	5.2	90.0		2
	…						
	Maximum	20.0	19.0	5.2	90.0		
Condor *GPC,GPM, GPF,GSM*	Minimum	2.1	3.0	1.0	0.3		
	…						
	GPC140-12	5.0	9.0	2.5	1.0		1
	GPFC110	4.0	6.5	2.0	1.0		1
	GSM15-24G	2.1	3.0	1.0	0.3		1
	GPMP900-24	5.0	13.0	2.5	5.0		1
	…						
	Maximum	5.0	13.0	2.5	5.0		
Power-Sonic *PS*	3115FS23TB30A00	6.0	3.0	4.0	5.0		1,3
Pulspower *ML15,SLV*	3115FS23TB30A00	4.0	1.0	3.0	0.5		1,3

SEE STUDIO
STRUCTURAL & EARTHQUAKE ENGINEERING
www.seestudioinc.com
P: 619.606.5058
E: designgroup@seestudioinc.com

SPECIAL SEISMIC CERTIFICATION

UNIT UNDER TEST (UUT) DESCRIPTION

UUT **1**

MANUFACTURER: MTE Corporation / TEAL Electronics Corporation

MODEL LINE: PDU / PCDU / VRDU Floor Mount & Wall Mount Power Distribution Units

MODEL NUMBER: **Custom Prototype Test Unit**

CONSTRUCTION SUMMARY:

Painted galvanized cold-rolled carbon steel enclosure.

TEST PARAMETERS:

Building Code: CBC 2016 **Component Importance Factor:** $I_p = 1.5$ **Test Criteria:** AC-156

OPTIONS SUMMARY:

ABB T1N080TLS4,T1N025TL,S3N150TW,T5N400BW,S201-K15,S201-K1,S201-K50,S202-K63,S202-K0.5,S203P-K10,S203U-K10,S203U-K50 Capacitors. Airpax/Sensata LELH11116250.0L,LEG616310.001 Capacitors. Bussmann FNQ2.0,FWH400A,MDA-1/4,KTK-1/8 Capacitors. Cutler Hammer EHD3080,FDB3030-U55 Capacitors. Little Fuse 0273.100H Capacitor. Shawmut 0273.100H Capacitor. Square D QOU350,QOU30001, QOU210,60110 Capacitors. Weber/Schurter AS168-X-CB-3G,AS168-X-CB-1G Capacitors. Mallory CGS433U040X5C Capacitor. Panasonic ECQ-E2224KS Capacitor. Cornell Dubilier 500C103T050AC2B, 5984-940C16P47K-F Capacitors. AVX FFVI6-9471-A Capacitor. Motor Cap CBB6S-660R346R Capacitor. ABB 1SVR430885R1300,A26-30-10-84,A9-30-10-84,AE30-30-11-81,AF300-30-11-72 Contactors/Relays. Bender 925 104 Contactors/Relay. Cutler Hammer/Eaton C25ENF440A,C25XXX,CE15HN2AB Contactors/Relays. Deltrol 20240-83 Contactors/Relay. IDEC RR1BA-USA24V Contactor/Relay. SSAC RLM611 Contactors/Relay. ABB OVR40-440SP,OVR40275SPTS Surge Suppressors. Phoenix Contact VAL-MS BE/FM Surge Suppressor. Panasonic ERZ-V07D101 Surge Suppressor. Radius Power RP300-200-22N,RP300-250-22-S Filters. Radius Power DSC1000-4 Filter. MTE RLX-0014-008,N-281,N-364,RLX-0014-009,N-312 Filters. Cutler Hammer E22B2, E22LB2,E22VA1 Switches. C&K 12TL4A2 Switch. Square D XB4BS542,XB4BS8445 Switches. Krausnaimer L400USA193600EG Switch. ABB MPD2-22C11L8,M2SS2-41G01 Switches. XICON 3" Diam. CF-RC Resistor. Ohmite L100J5K0E,810F40RE Resistors. Cutler Hammer E22H2,EXXX Indicators. Chicago Mini LED 19352130,2191U7-24V Indicators. Allen Bradley 800-FP-P5PN3Y Indicator. VCC CMC321RTP,CMC321GTP Indicators. Dialight 95-5763-09-311 Indicator. Newhaven NHD-240128WG-BT Indicator. ACME TA-83300 Control Transformer. Square D 9070-T50D19,9070-T300D19,9070-T100D31 Control Transformers. Midwest 5SC40110201 Control Transformer. VCC 4-49-6634,4-54-0500 Control Transformers. Hammond 5SC40110201 Control Transformer. Teal Electronics 0730539 Transformer. Honeywell T775B2040 Sensor. Building Autom BA/T10K-H305D-WP Sensor. TEAL 0800290,0800337,0800346,0800335-01 PCB's. Yaskawa CIMRF7U41100061, CIMR-VU4A0002FA VFD's. TEAL 0810748,0810749 Power Monitors. Pacific Tran 26835 Inductor. EBM 4660N Fan. Orion OA172SAPL Fan. Tronics F6025-H fan. Comair MR77 Fan. Eaton/Powerware PW51151000i,103005093-6591 Batteries. Condor GPC140-12,GPFC110,GSM15-24G,GPMP900-24 Power Supplies. Power-Sonic 3115FS23TB30A00 Power Supply. Pulspower 3115FS23TB30A00 Power Supply.

MOUNTING SUMMARY:

Rigid floor mounted. Unit mounted to shake table with a total of eight (8) 5/8"-11 Gr. 5 bolts.

NOTES:

Contents were included in testing per operating conditions.

UUT IMAGE

UUT PROPERTIES

Dimensions (in)			Weight (lb)	First Natural Frequency (Hz)		
Depth	Width	Height		F-B	S-S	Vert
37.0	37.0	65.5	2,660	19.3	9.9	25.4

UNIT MAINTAINED STRUCTURAL INTEGRITY AND REMAINED OPERATIONAL

PER MANUFACTURER REQUIREMENT WHEN SUBJECTED TO THE FOLLOWING TEST PARAMETERS

S_{DS} (g)	z/h	A_{FLX-H} (g)	A_{RIG-H} (g)	A_{FLX-V} (g)	A_{RIG-V} (g)
2.00	1.0	3.20	2.40	1.33	0.53

SPECIAL SEISMIC CERTIFICATION

UNIT UNDER TEST (UUT) DESCRIPTION

UUT **1**

MANUFACTURER: MTE Corporation / TEAL Electronics Corporation

MODEL LINE: PDU / PCDU / VRDU Floor Mount & Wall Mount Power Distribution Units

MODEL NUMBER: **Custom Prototype Test Unit**

SUPPORT AND ATTACHMENT SUMMARY:

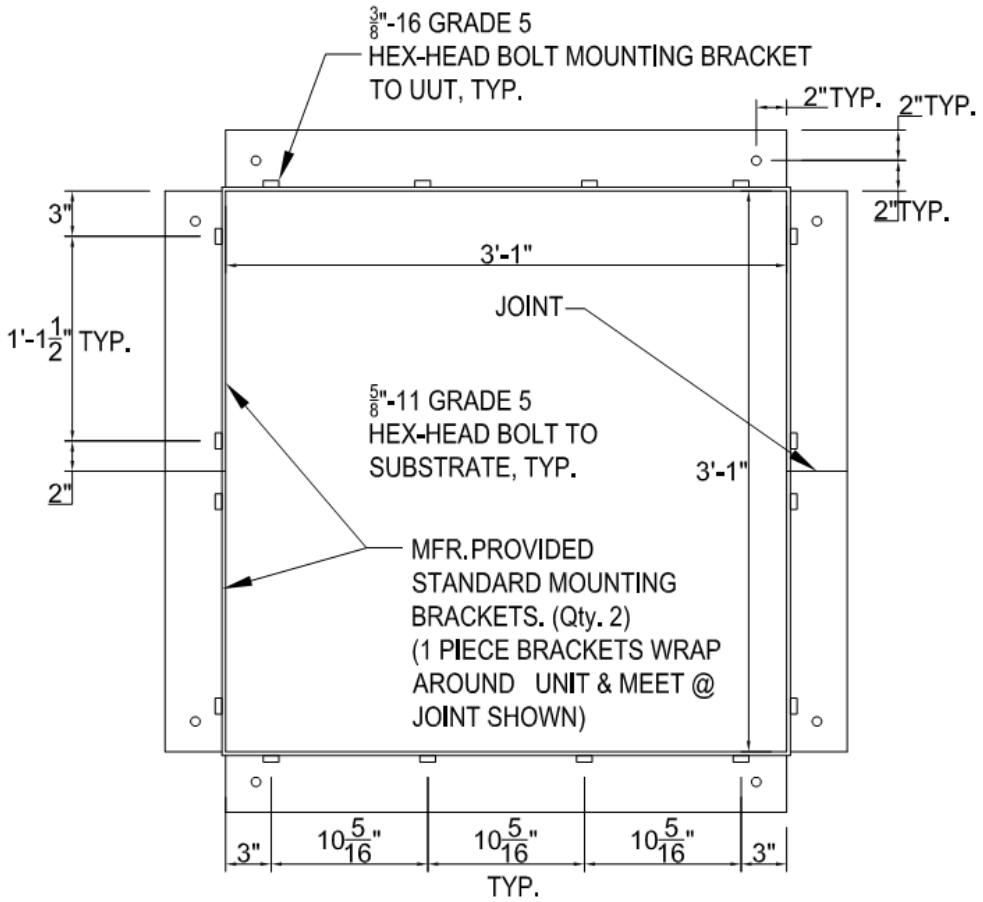

Plan View

SEE STUDIO
STRUCTURAL & EARTHQUAKE ENGINEERING
www.seestudioinc.com
P: 619.606.5058
E: designgroup@seestudioinc.com

SPECIAL SEISMIC CERTIFICATION

UNIT UNDER TEST (UUT) DESCRIPTION

UUT **2**

MANUFACTURER: MTE Corporation / TEAL Electronics Corporation

MODEL LINE: PDU / PCDU / VRDU Floor Mount & Wall Mount Power Distribution Units

MODEL NUMBER: **Custom Prototype Test Unit**

CONSTRUCTION SUMMARY:

Painted galvanized cold-rolled carbon steel enclosure.

OPTIONS SUMMARY:

ABB T1N080TL Capacitor. ABB S201-K20 Capacitor. Bussmann MDA 1.0,FNQ-30.0,MDA .5 Capacitors. Phoenix Contact VAL-MS 230 ITS Surge Suppressor. ABB OL40WS4PB Switch. GE Industrial CR104PBG01R1 Switch. ABB ML1-20G10L8 Indicator. TEAL 0730490 Transformer. NMB 3115FS23TB30A00 Fan. Eaton/Powerware 103004729-6591 Battery. Marathon Power ARMS-3000-02, EBPR-0014-96 Power Supplies.

TEST PARAMETERS:

Building Code: CBC 2016

Component Importance Factor: $I_p = 1.5$

Test Criteria: AC-156

MOUNTING SUMMARY:

Rigid floor mounted. Unit mounted to shake table with a total of eight (8) 5/8”-11 Gr. 5 bolts.

NOTES:

Contents were included in testing per operating conditions.

UUT IMAGE

UUT PROPERTIES

Dimensions (in)			Weight (lb)	First Natural Frequency (Hz)		
Depth	Width	Height		F-B	S-S	Vert
20.5	21.5	56.5	1,195	19.5	8.8	21.3

UNIT MAINTAINED STRUCTURAL INTEGRITY AND REMAINED OPERATIONAL

PER MANUFACTURER REQUIREMENT WHEN SUBJECTED TO THE FOLLOWING TEST PARAMETERS

S_{DS} (g)	z/h	A_{FLX-H} (g)	A_{RIG-H} (g)	A_{FLX-V} (g)	A_{RIG-V} (g)
2.00	1.0	3.20	2.40	1.33	0.53

SPECIAL SEISMIC CERTIFICATION

UNIT UNDER TEST (UUT) DESCRIPTION

UUT **2**

MANUFACTURER: MTE Corporation / TEAL Electronics Corporation

MODEL LINE: PDU / PCDU / VRDU Floor Mount & Wall Mount Power Distribution Units

MODEL NUMBER: **Custom Prototype Test Unit**

SUPPORT AND ATTACHMENT SUMMARY:

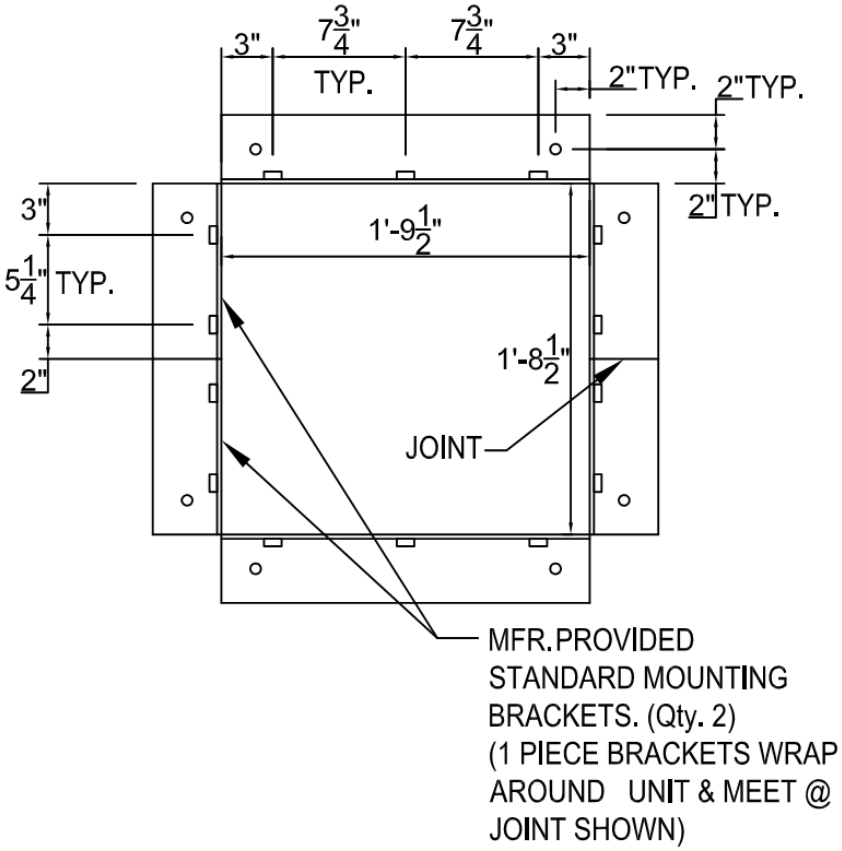

Plan View

SEE STUDIO
STRUCTURAL & EARTHQUAKE ENGINEERING
www.seestudioinc.com
P: 619.606.5058
E: designgroup@seestudioinc.com

SPECIAL SEISMIC CERTIFICATION

UNIT UNDER TEST (UUT) DESCRIPTION

UUT **3**

MANUFACTURER: MTE Corporation / TEAL Electronics Corporation

MODEL LINE: PDU / PCDU / VRDU Floor Mount & Wall Mount Power Distribution Units

MODEL NUMBER: **Custom Prototype Test Unit**

CONSTRUCTION SUMMARY:

Painted galvanized cold-rolled carbon steel enclosure.

OPTIONS SUMMARY:

ABB T1N050TL,TS3N150TW,T4N250BW Capacitors. ABB S201-K3,S281UC-K2 Capacitors. Bussmann FNQ-R-1 ½,KLM-1 Capacitors. ABB CAL5-11,A63-30-11-84 Contactors/Relays. IDEC RR2BA-UDC12V Contactors/Relay. Transtronics BVUPS12FPA-10 Contactors/Relay. Citel DS250VGT-300 Surge Suppressor. Cutler Hammer E22PB3,E22EB2 Switches. ABB ML1-20G10L1 Indicator. Square D 9070-T300D40 Control Transformer. Power-Sonic 3115FS23TB30A00 Power Supply. Pulspower 3115FS23TB30A00 Power Supply.

TEST PARAMETERS:

Building Code: CBC 2016

Component Importance Factor: $I_p = 1.5$

Test Criteria: AC-156

MOUNTING SUMMARY:

Rigid Wall mounted. Unit mounted to test fixture with a total of four (4) 5/16"-18 socket head cap screws and washers.

NOTES:

Contents were included in testing per operating conditions.

UUT IMAGE

UUT PROPERTIES

Dimensions (in)			Weight (lb)	First Natural Frequency (Hz)		
Depth	Width	Height		F-B	S-S	Vert
9.8	21.5	35.5	130	N/A	N/A	N/A

UNIT MAINTAINED STRUCTURAL INTEGRITY AND REMAINED OPERATIONAL

PER MANUFACTURER REQUIREMENT WHEN SUBJECTED TO THE FOLLOWING TEST PARAMETERS

S_{DS} (g)	z/h	A_{FLX-H} (g)	A_{RIG-H} (g)	A_{FLX-V} (g)	A_{RIG-V} (g)
2.00	1.0	3.20	2.40	1.33	0.53

SEE STUDIO
STRUCTURAL & EARTHQUAKE ENGINEERING
www.seestudioinc.com
P: 619.606.5058
E: designgroup@seestudioinc.com

SPECIAL SEISMIC CERTIFICATION

UNIT UNDER TEST (UUT) DESCRIPTION

UUT **4**

MANUFACTURER: MTE Corporation / TEAL Electronics Corporation

MODEL LINE: PDU / PCDU / VRDU Floor Mount & Wall Mount Power Distribution Units

MODEL NUMBER: **Custom Prototype Test Unit**

CONSTRUCTION SUMMARY:

Painted galvanized cold-rolled carbon steel enclosure.

OPTIONS SUMMARY:

ABB T3N070TW Capacitor. ABB S202-K8,S202U-K13 Capacitors. Bussmann FNQ-30.0,MDA 2.0 Capacitors. Phoenix Contact VAL-MS 500 ST,VAL-MS BE Surge Suppressors. TEAL Tealwave Filter. Allen Bradley 800-FP-P3PN3G Indicator. TEAL 0720401 Transformer.

TEST PARAMETERS:

Building Code: CBC 2016

Component Importance Factor: $I_p = 1.5$

Test Criteria: AC-156

MOUNTING SUMMARY:

Rigid Wall mounted. Unit mounted to test fixture with a total of six (6) 3/8"-18 socket head cap screws with washers.

NOTES:

Contents were included in testing per operating conditions.

UUT IMAGE

UUT PROPERTIES

Dimensions (in)			Weight (lb)	First Natural Frequency (Hz)		
Depth	Width	Height		F-B	S-S	Vert
9.0	30.0	24.0	150	N/A	N/A	N/A

UNIT MAINTAINED STRUCTURAL INTEGRITY AND REMAINED OPERATIONAL

PER MANUFACTURER REQUIREMENT WHEN SUBJECTED TO THE FOLLOWING TEST PARAMETERS

S_{DS} (g)	z/h	A_{FLX-H} (g)	A_{RIG-H} (g)	A_{FLX-V} (g)	A_{RIG-V} (g)
2.00	1.0	3.20	2.40	1.33	0.53