Office of Statewide Health Planning and Development

Facilities Development Division *www.oshpd.ca.gov/fdd*
400 R Street. Suite 200, Sacramento, California 95811-6213 Phone (916) 440-8300 Fax (916) 654-2973

APPLICATION FOR PREAPPROVAL

SPECIAL SEISMIC CERTIFICATION OF EQUIPMENT AND COMPONENTS

For Office Use Only

APPLICATION NO.

OSP -0243-10

Check whether application is: NEW [X] RENEWAL [ ]

1.0

Johnson Controls, Inc. — *Manufacturer*

Harold Dubensky — *Manufacturer's Technical Representative*

5757 North Green Bay Ave, Milwaukee, WI 53201 — *Mailing Address*

717-815-4218 — *Telephone*

harold.j.dubensky@jci.com — *E-mail Address*

2.0

Solution YC Air Handling Units — *Product Name*

Custom Air Handling Units — *Product Type*

York Solution YC Custom Air Handling Units

Product model No (List all unique product identification numbers and/or serial numbers)

General Description: These are custom sized Air Handling Units that can be made in multiple sizes and configurations. Units are rigid mount with internally isolated components. Approval is for unstacked configurations only. All modifications made to the tested units before/during the tests and modifications required to address the anomalies observed during the tests shall be incorporated into the certified units.

3.0

The VMC Group — *Applicant Company Name*

John P. Giuliano, PE — *Contact Person*

113 Main St, Bloomingdale NJ, 07403 — *Mailing Address*

973-838-1780 — *Telephone*

john.giuliano@thevmcgroup.com — *E-mail Address*

I hereby agree to reimburse the Office of Statewide Health Planning and Development for the actual costs incurred by the department for review.

Signature of Applicant

3/26/12 — *Date*

President — *Title*

The VMC Group — *Company Name*

☑

4.0 ***Registered Design Professional Preparing the Report***

The VMC Group
Company Name

Mr. Ken Tarlow — *Contact Name*
SE2851 — *California License Number*

113 Main Street, Bloomingdale NJ, 07403
Mailing Address

973-838-1780 — *Telephone*
ken.tarlow@thevmcgroup.com — *E-mail Address*

5.0 ***California Licensed Structural Engineer Review and Acceptance of the Report***

The VMC Group
Company Name

Mr. Ken Tarlow — *Contact Name*
SE2851 — *California License Number*

113 Main Street, Bloomingdale NJ, 07403
Mailing Address

973-838-1780 — *Telephone*
ken.tarlow@thevmcgroup.com — *E-mail Address*

6.0 ***Anchorage Pre-Approval***

☐ *Anchorage is pre-approved under OPA-*
(Separate application for anchorage pre-approval is required)

☒ Anchorage is not Pre-approved

70. ***Certification Method***

☒ *Testing in accordance with:* ☒ *ICC-ES AC-156* ☐ *Other (Please Specify):*

☐ *Analysis*
☐ *Experience data*
☐ *Combination of Testing, Analysis, and/or Experience Data (Please Specify):*

8.0 ***Testing Laboratory (if applicable)***

ETL — *Company Name*
Brady Richard — *Contact Name*

11034 Indian Trail, Dallas, TX 75229
Mailing Address

972-247-9657 — *Telephone*
brady@etldallas.com — E-mail:

9.0 ***Approval Parameters***

Design in accordance with ASCE 7-05 Chapter 13: ☒ Yes ☐ No

Design Basis of Equipment or Components (F_p/W_p) = 4.34

S_{DS} (Spectral response acceleration at short period) =1.93 g - ***Except where components with lower S_{DS} certification are used, S_{DS} level shall be determined by the lowest S_{DS} level for which components are approved.***

a_p (In-structure equipment or component amplification factor) =2.5

R_p (Equipment or component response modification factor) =2.0

I_p (Importance factor) = 1.5

z/h (Height factor ratio)= 1.0

Equipment or Component fundamental period(s) = See Attached Matrix

Building period limits (if any) =N/A

Overall dimensions and weight (or range thereof) = See Attached Matrix

Equipment or Components @ grade designed in accordance with ASCE 7-05 Chapter 15: ☐ Yes ☒ No
Design Basis of Equipment or Components (V/W) =

S_{DS} (Spectral response acceleration at short period) =

S_1 (Spectral response acceleration at 1 second period) =

R (Response modification coefficient)=1.0

Ω_0 (System overstrength factor) =1.0

C_d (Deflection amplification factor) =1.0

I_p (Importance factor) =1.5

Height to Center of Gravity above base =

Equipment or Component fundamental period(s) = Sec

Overall dimensions and weight (or range thereof) =

Tank(s) designed in accordance with ASME BPVC, 2007: ☐ Yes ☒ No

10.0 ***List of attachments supporting the special seismic certification of equipment or components:***

☒ *Test Report*	☒ *Drawings*	☒ *Manufacturer's Catalog*
☐ *Calculations*	☐ *Others (Please Specify):*	

11.0 ***OSHPD Approval*** *(For Office Use Only)*

4/19/2012	**December 31, 2016**
Signature & Date	*Approval Expiration Date*
M. R. Karim, SHFR	S_{DS} (g) = **See Section 9.0** z/h = **1.0**
Name & Title	*Special Seismic Certification Valid Up to*

Condition of Approval (if any):

	UUT1	UUT2A	UUT2B	UUT2C	UUT3A	UUT3B	UUT3C	UUT3D
Weight (lbs)	4304	9847	9950	9354	9922	9999	6988	
H	96"	144"	144"	144"	144"	144"	144"	6"
W	96"	144"	144"	144"	144"	144"	144"	94.5"
L	96"	96"	96"	96"	144"	144"	144"	94.5"
Shake Configuration	4 walls	4 walls	Inlet Removed	Inlet & Right Wall Removed	4 Walls	Inlet & Outlet Removed	Inlet, Right Wall & Outlet Removed	No Walls, Base Only
Mounting Configuration	14" Tall P6000S Curb	Rigid to Table	Rigid to Table	Rigid to Table	36" Tall P6000S Curb	Rigid to Table	Rigid to Table	Rigid to Table
Fan 1	Small (12.4") Belt Drive Plenum Fan Twin City				Small (12.4") Multi Direct Drive Plenum Fan Twin City	Large (60") Belt Drive Plenum Fan Twin City	Large (49") Direct Drive Plenum Fan Twin City	Small (16") Belt Drive Plenum Fan Comefri
Fan 2					Large (36.5") Multi Direct Drive Plenum Fan Twin City			Small (20") Direct Drive Plenum Fan Vertical Twin City
Motor 1	Baldor ODP,P,1.5HP, 230/460-3-60, 145T frame				Baldor ODP,P,1.5HP, 230/460-3-60, 143T frame	Baldor ,ODP,P,150HP 460-3-60, 444T frame	Baldor, ODP,P,100HP 460-3-60, 444T frame	Baldor, ODP,P,5HP 230/460-3-60, 185T frame
Motor 2					Baldor, ODP,P,60HP, 230/460-3-60, 364T frame			Baldor, TEFC,P,10HP 230/460-3-60, 215T frame
Drive(s) / SPPP	Motor Starter(s)	ERW VFD Panel			KP1	KP3		
Components	Small Heat Pipe	Large Heat Pipe		HEPA Filters (4"w x 5"h) & (1"w x 5"h)	Motor Starter 60HP		Motor Starter 125HP	
	Small Energy Wheel	Large Energy Wheel	V-Filters	Pre+Rigid (2"w x 3"h) & (1"w x 6"h)				
	Small Coil		Large Coil	Pre Only (1"w x 2"h) & (1"w x 2"h)				
				Pre+Bag (1"w x3"h) & (1"w x3"h)				
				Pre+Carbon (3"w x 2"h)				
	Small Evap Cooler			Large Evap Cooler				
Dampers, Actuators, & Louvers	Inlet wall 27w x 29h		Outlet wall 24"w x 24"h	Outlet wall 51"w x 77"h				
	Oulet wall 27w x 27h		Outlet wall 24"w x 24"h	Outlet wall 51"w x 75"h				
Base Rail Size	6" steel	6" steel	8" steel	10" steel	6" steel	8" steel	12" steel	
Floor Insulation Type	Foam	Foam	Foam	Foam	Foam	Foam	Foam	
Floor Panel Material and Thickness	Stainless Steel Treadplate	Stainless Steel AISI304	Aluminum Treadplate	Painted Steel Treadplate	Stainless Steel AISI304	Galvanized Steel ASTM A653 CS Type B	Galvanized Steel ASTM A653 CS Type B	
	1/8"	12 ga	1/8"	1/8"	16ga	10ga	18ga	
Wall/Roof Gross Thickness	2 standard	4 standard	3" ultra	2" standard	4" thermal	3" standard	2" thermal	
Wall/Roof Exterior Panel Material and Thickness	Stainless Steel AISI304	Aluminum Textured 3105-H14	Aluminum Textured 3105-H14	Aluminum Textured 3105-H14	Galvanized Steel ASTM A653 CS Type B	Galvanized Steel ASTM A653 CS Type B	Galvanized Steel ASTM A653 CS Type B	
	20 ga	0.04	0.04"	0.04"	16ga	20ga	20ga	
Wall/Roof Interior Panel Material and Thickness	Stainless Steel AISI304	Stainless Steel AISI304	Aluminum Smooth 3003-H14	Aluminum Smooth 3003-H14	Stainless Steel AISI304	Galvanized Steel ASTM A653 CS Type B	Galvanized Steel ASTM A653 CS Type B	
	20 ga solid	20 ga solid	0.05" Solid	0.05" Perforated	16ga Solid	20ga Perforated	22ga Solid	
Wall/Roof Panel Insulation	Fiberglass	Mineral Wool	Foam	Fiberglass/Foam	Foam	Fiberglass/Foam	Foam	
Misc Components	HEAT PIPE	HEAT PIPE	Coils/Blank-offs	Evaporative Cooler	Small Fan DD PF			
	HEATWHEEL	HEATWHEEL	VEE Filters/Blank-offs	HF/Blank-offs	KP1	KP3		
	COIL	DIVIDER WALL HEATWHEEL/HEATPIPE	Horizontal Blade Formed Steel Louver 77"hx51"w	RF/Blank-offs				
	EVAPCOOLER	HW/HP Blank-offs	Vertical Blade Extruded Aluminum Louver 75"hx51"W	VF/Blank-offs - 390Lbs(deduct)				
	EVAP/HEATPIPE BLANK-OFFS				ECO. Internal Wall			
	DIVIDER WALL HEATWHEEL/HEATPIPE				RA Damper			
	Smoke Damper Galvanized Steel Blade 24"hx24"w							
	Smoke Damper Aluminum Blade 24"hx24"w							
	Backdraft Damper Galvanized Steel Blade 20"hx20"w							
	Horizontal Blade Formed Steel Louver 29"hx27"w							
	Vertical Blade Extruded Aluminum Louver 27"hx27"w							

All components listed under each UUT was physically installed into the specific UUT. UUT was full of contents during the testing.

York Custom (PACE) Air Handling Units
Tested Components Summay

UUT1 YC-6Hx96Wx96L, DP-PFAN-CC-IP					
Cabinet Construction Summary					
Side and Top Panel Construction: 2" standard construction, fiberglass insulation, 20 ga stainless steel exterior skin and 20 ga stainless steel liner					
Base Construction: 6" welded structural steel base; 1/8" stainless steel treadplate floor with foam insulation underneath					
Curb Support: 14" Tall P6000S Curb					
Dampers and Louvers: (1) smoke damper galvanized steel blade 24Hx24W (actuated); (1) smoke damper aluminum blade 24Hx24W (actuated); (1) backdraft galvanized steel blade 20Hx20W (gravity closure) ; horizontal blade formed steel louver 29Hx27W; bertical blade extruded aluminum louver 27Hx27W					
Doors: 2" thick standard with viewports					
Wall Location Summary					
All Runs: Four walls					
Lowest Natural Frequency	F-B (Hz)	S-S (Hz)	V (Hz)		
Cabinet	8.26	7.78	8.36		
Component Summary					
Item	**Dimensions**				**Passed**
Cabinet	**Length**	**Width**	**Height**	**Total Weight**	**Sds Level**
Nominal cabinet dimensions	96	96	96	4,304	1.93
Electrical Enclosures	**Depth**	**Width**	**Height**	**Weight**	
Manual motor starter panel (starter for fan, GFI for evap cooler pump)	10.0	16.0	24.0	100	1.93
Heat wheel VFD (1.2fla)	6.3	2.8	9.4	10	1.93
Coils	**Length**	**Width**	**Height**	**Weight**	
Water coil, 1/2" dia, 1 row, 0.016" TW, 2 stack NO rack, stainless steel casing, CU fins, 14fpi, 0 int. tube supports	7.4	62	35	149	1.93
Heat pipe, 1-inch I.D. seamless, integrally finned aluminum tubing, 2 rows	9.6	24	14 7/8	49	1.93
Evaporative Cooler	**Length**	**Width**	**Height**	**Weight**	
Evap cooler 12" rigid media, 8" sump, 1/15 hp pump	26.0	24	24	364	1.93
Energy Wheel	**Length**	**Width**	**Height**	**Weight**	
Heat wheel aluminum media, 1/4 hp motor # TC14 MSP	18.0	28	28	151	1.93
Fan	**Length**	**Width**	**Height**	**Weight**	
Plenum airfoil, belt drive, 12.4" wheel, Baldor, ODP,P,1.5HP, 230/460-3-60, 145T frame; Twin City	21.6	43.5	28.4	256	1.93

THE VMC GROUP
The Power of Together ™

7.0 TEST PHOTOGRAPHS

7.1 UUT #1 (4 Walls, VMC P6000S Non-Isolated Seismic Curb)

Figure 1 - UUT #1 Pre-Test

Figure 2 - UUT #1 Pre-Test

Figure 3 - UUT #1 Pre-Test

Figure 4 - UUT #1 Pre-Test

Figure 5 - UUT #1 Pre-Test

Figure 6 - UUT #1 Pre-Test

York Custom (PACE) Air Handling Units
Tested Components Summay

UUT2A (MED1), YC-144Hx144Wx96L, DP-NS-IP					
Cabinet Construction Summary					
Side and Top Panel Construction: 4" standard construction, mineral wool insulation; 0.04" textured aluminum exterior skin and 20 ga staineless steel liner					
Base Construction: 6" welded structural steel base; 12 ga stainless steel floor with foam insulation underneath					
Curb Support: Mounted directly to shaker table structural test fixture					
Dampers and Louvers: None					
Doors: 4" thick standard					
Wall Location Summary					
All Runs: Four walls					
Lowest Natural Frequency	F-B (Hz)	S-S (Hz)	V (Hz)		
Cabinet	4.52	4.40	4.19		
Component Summary					
Item	**Dimensions**				**Passed**
Cabinet	**Length**	**Width**	**Height**	**Total Weight**	**Sds Level**
Nominal cabinet dimensions	96	144	144	9,847	1.93
Electrical Enclosures	**Depth**	**Width**	**Height**	**Weight**	
Heat Wheel VFD (1.9fla)	8.7	9.0	19.2	3	1.93
Coils	**Length**	**Width**	**Height**	**Weight**	
Heat Pipe, 2 high coil 5 rows deep 1-inch I.D. seamless, integrally finned aluminum tubing	11.5	120	119	2,936	1.93
Energy Wheel	**Length**	**Width**	**Height**	**Weight**	
Energy wheel aluminum media, 3/4 hp motor # TF-359-ECA	21.0	126	126	3,048	1.93

THE VMC GROUP
The Power of Together ™

7.2 UUT #2A (4 Walls)

Figure 16 - UUT #2A Pre-Test

Figure 17 - UUT #2A Pre-Test

Figure 18 - UUT #2A Pre-Test

Figure 19 - UUT #2A Pre-Test

Figure 20 - UUT #2A Pre-Test

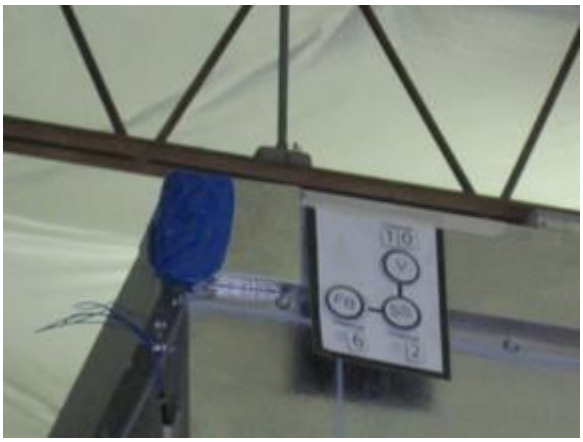

Figure 21 - UUT #2A Pre-Test

York Custom (PACE) Air Handling Units
Tested Components Summay

UUT2B (MED2), YC-144Hx144Wx96L, DP-CC-IP

Cabinet Construction Summary

Side and Top Panel Construction: 3" Ultra Thermal Break construction, foam insulation, 0.04" textured aluminum exterior skin and 0.05" smooth aluminum liner

Base Construction: 8" welded structural steel base; 1/8" aluminum treadplate floor with foam insulation underneath

Curb Support: Mounted directly to shaker table structural test fixture

Dampers and Louvers: (1) smoke damper aluminum blade 72Hx48W (actuated); (1) smoke damper galvanized steel 72Hx48W (actuated); (1) 75H X 51W vertical blade aluminum louver; (1) 77H X 51W horizontal blade galvanized steel louver

Doors: 3" thick thermal break with viewports

Wall Location Summary

All Runs: Inlet removed

Lowest Natural Frequency	F-B (Hz)	S-S (Hz)	V (Hz)	
Cabinet	3.59	3.49	3.69	

Component Summary

Item	**Dimensions**				**Passed**
Cabinet	**Length**	**Width**	**Height**	**Total Weight**	**Sds Level**
Nominal cabinet dimensions	96	144	144	9,950	1.93
Coils	**Length**	**Width**	**Height**	**Weight**	
Water coil, 3 high coil w stacking rack, galvanized steel casing, AL flat fins, 14 fpi, 8 row, 2 int. tube supports (129" L), 5/8" tubes, 0.049" thick	12.6	127	117	5,648	1.93
Filter Rack	**Length**	**Width**	**Height**	**Weight**	
Galvanized steel sheet metal-angle filters slide rack with filters	23.0	136.0	122.0	340	1.93

THE VMC GROUP
The Power of Together™

7.3 UUT #2B-1 (No Inlet Wall, X-Bracing)

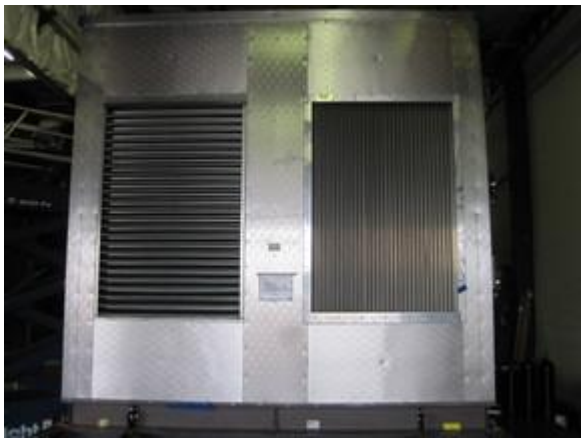

Figure 37 - UUT #2B-1 Pre-Test

Figure 38 - UUT #2B-1 Pre-Test

Figure 39 - UUT #2B-1 Pre-Test

Figure 40 - UUT #2B-1 Pre-Test

Figure 41 - UUT #2B-1 Pre-Test

Figure 42 - UUT #2B-1 Pre-Test

York Custom (PACE) Air Handling Units
Tested Components Summay

UUT2C (MED3), YC-144Hx144Wx96L, DP-HF-NS-RF

Cabinet Construction Summary

Side and Top Panel Construction: 2" standard construction, fiberglass/foam combination insulation, 0.04" textured aluminum exterior skin and 0.05" perforated aluminum liner

Base Construction: 10" welded structural steel base; 1/8" steel treadplate floor with foam insulation underneath

Curb Support: Mounted directly to shaker table structural test fixture

Dampers and Louvers: None

Doors: None

Wall Location Summary

All Runs: Inlet & right wall removed

Lowest Natural Frequency	F-B (Hz)	S-S (Hz)	V (Hz)	
Cabinet	4.96	5.19	5.29	

Component Summary

Item	**Dimensions**				**Passed**
Cabinet	**Length**	**Width**	**Height**	**Total Weight**	**Sds Level**
Nominal cabinet dimensions	96	144	144	9,354	1.93
Evaporative Cooler	**Length**	**Width**	**Height**	**Weight**	
Evap cooler with 12" rigid media, 10" sump, 1/3 hp pump	26.0	130	130	3,732	1.93
Filter Bank	**Length**	**Width**	**Height**	**Weight**	
Rigid filter galvanized frames: pre filters + rigid filters	23	48	72	147	1.93
Rigid filter galvanized frames: pre filters + rigid filters	23	24	36	42	1.93
Rigid filter stainless steel frames: pre filters + rigid filters	23	24	36	42	1.93
Carbon filter stainless steel frames: pre filters + carbon filters	23	72	48	135	1.93
Bag filter aluminum slide rack: pre filters + bag filters	23	36	72	45	1.93
Pre filter galvanized slide rack: pre filters	23	36	48	14	1.93
Hepa filter galvanized frames: Astrogel-I filters	16	48	120	795	1.93
Hepa filter galv.& SS frames: Megacel-I filters	16	48	120	580	1.93
Hepa filter stainless steel frames: Megacel-I filters	16	12	120	225	1.93

THE VMC GROUP
The Power of Together™

7.5 UUT #2C-2 (No Inlet & RH Walls, No X-Bracing on Inlet)

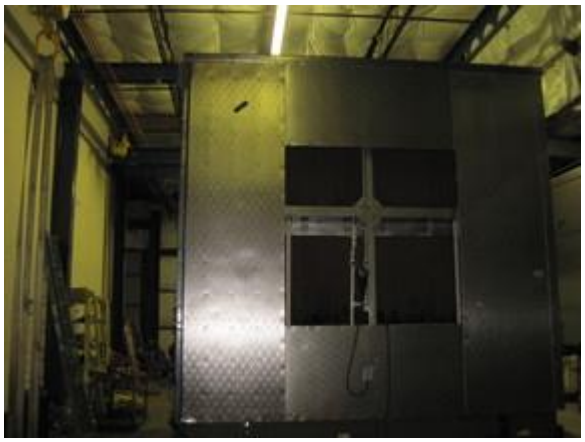

Figure 79 - UUT #2C-2 Pre-Test

Figure 80 - UUT #2C-2 Pre-Test

Figure 81 - UUT #2C-2 Pre-Test

Figure 82 - UUT #2C-2 Pre-Test

Figure 83 - UUT #2C-2 Pre-Test

York Custom (PACE) Air Handling Units
Tested Components Summay

UUT3A (LRG1), YC-144Hx144Wx144L, ECO-PFAN-IP					
Cabinet Construction Summary					
Side and Top Panel Construction: 4" thermal break construction, foam insulation; 16 ga galvanized steel exterior skin and 16 ga stainless steel liner					
Base Construction: 6" welded structural steel base; 16 ga stainless steel floor with foam insulation underneath					
Curb Support: 36" Tall P6000S Curb					
Dampers and Louvers: (1) ultra low leak damper galvanized steel blade 72Hx48W					
Doors: 4" thick thermal break doors with viewports					
Wall Location Summary					
All Runs: Four walls					
Lowest Natural Frequency	F-B (Hz)	S-S (Hz)	V (Hz)		
Cabinet	3.02	2.61	15.57		
Component Summary					
Item	**Dimensions**				**Passed**
Cabinet - Economizer mode provided (angled internal wall)	**Length**	**Width**	**Height**	**Total Weight**	**Sds Level**
Nominal cabinet dimensions	144	144	144	9,922	1.93
Electrical Enclosures	**Depth**	**Width**	**Height**	**Weight**	
Single Point Power Panel with supply fan VFD for Qty: (2) (NEMA3R Ventilated)	18.5	21.0	28.0	194	1.93
Manual motor starter for fan	10.0	26.0	60.0	150	1.93
Fan	**Length**	**Width**	**Height**	**Weight**	
Qty: (1) plenum airfoil, direct drive, 36.5" wheel, Twin City multi fan arrangement, Baldor, ODP,P,60HP, 230/460-3-60, 364T frame	60	55.8	58.6	2,442	1.93
Qty: (2) plenum airfoil, direct drive, 12.4" wheel, Twin City multi fan arrangement, Baldor, ODP,P,1.5HP, 230/460-3-60, 143T frame	27.5	30.2	27.5	256	1.93

THE VMC GROUP
The Power of Together ™

7.6 UUT #3A (4 Walls, VMC P6000S Non-Isolated Seismic Curb)

Figure 91 - UUT #3A Pre-Test

Figure 92 - UUT #3A Pre-Test

Figure 93 - UUT #3A Pre-Test

Figure 94 - UUT #3A Pre-Test

Figure 95 - UUT #3A Pre-Test

Figure 96 - UUT #3A Pre-Test

York Custom (PACE) Air Handling Units
Tested Components Summay

UUT3B (LRG2), YC-144Hx144Wx144L, PFAN-IP					
Cabinet Construction Summary					
Side and Top Panel Construction: 3" standard construction, fiberglass/foam combination insulation, 20 ga galvanized steel exterior skin and 20 ga galvanized perforated liner					
Base Construction: 8" welded structural steel base; 10 ga galvanized steel floor with foam insulation underneath					
Curb Support: Mounted directly to shaker table structural test fixture					
Dampers and Louvers:					
Doors: 3" standard doors					
Wall Location Summary					
All Runs: Inlet & outlet removed					
Lowest Natural Frequency	F-B (Hz)	S-S (Hz)	V (Hz)		
Cabinet	6.56	3.16	3.78		
Component Summary					
Item	**Dimensions**				**Passed**
Cabinet	**Length**	**Width**	**Height**	**Total Weight**	**Sds Level**
Nominal cabinet dimensions	144	144	144	9,999	1.93
Electrical Enclosures	**Depth**	**Width**	**Height**	**Weight**	
Single Point Power Panel with supply fan VFD for 150 HP motor	22.0	34.0	76.0	620	1.93
Fan	**Length**	**Width**	**Height**	**Weight**	
Plenum Airfoil, belt drive, 60" wheel, Baldor, ODP,P,150HP, 460-3-60, 444T frame; Twin City	97.6	104.8	88.5	4,430	1.93

THE VMC GROUP
The Power of Together ™

7.7 UUT #3B-1 (No Inlet & Outlet Walls, X-Bracing)

Figure 126 - UUT #3B-1 Pre-Test

Figure 127 - UUT #3B-1 Pre-Test

Figure 128 - UUT #3B-1 Pre-Test

Figure 129 - UUT #3B-1 Pre-Test

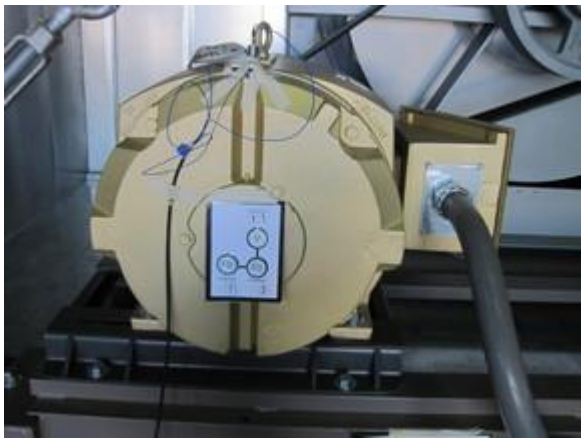

Figure 130 - UUT #3B-1 Pre-Test

Figure 131 - UUT #3B-1 Pre-Test

7.8 UUT #3B-2 (No Inlet & Outlet Walls, No X-Bracing)

Figure 147 - UUT #3B-2 Pre-Test

Figure 148 - UUT #3B-2 Pre-Test

Figure 149 - UUT #3B-2 Pre-Test

Figure 150 - UUT #3B-2 Pre-Test

Figure 151 - UUT #3B-2 Pre-Test

Figure 152 - UUT #3B-2 Pre-Test

York Custom (PACE) Air Handling Units
Tested Components Summay

UUT3C (LRG3), YC-144Hx144Wx144L, DP-PFAN-IP					
Cabinet Construction Summary					
Side and Top Panel Construction: 2" thermal break Construction, foam insulation; 20 ga galvanized steel exterior skin and 18 ga galvanized steel liner					
Base Construction: 12" welded structural steel base; 18 ga galvanized steel floor with foam insulation underneath					
Curb Support: Mounted directly to shaker table structural test fixture					
Dampers and Louvers: (1) Backdraft galvanized steel blade 68Hx68W (gravity closure)					
Doors: 2" thermal break doors with viewport					
Wall Location Summary					
All Runs: Inlet, right wall & outlet removed					
Lowest Natural Frequency	F-B (Hz)	S-S (Hz)	V (Hz)		
Cabinet	4.04	5.11	3.79		
Component Summary					
Item	**Dimensions**				**Passed**
Cabinet	**Length**	**Width**	**Height**	**Total Weight**	**Sds Level**
Nominal cabinet dimensions	144	144	144	6,988	1.93
Electrical Enclosures	**Depth**	**Width**	**Height**	**Weight**	
Manual motor starter panel for fan	10.0	26.0	60.0	150	1.93
Fan	**Length**	**Width**	**Height**	**Weight**	
Plenum airofoil, direct drive, 49" wheel, Baldor, ODP,P,100HP, 460-3-60, 444T frame; Twin City	81.8	71	75.5	3,481	1.93

THE VMC GROUP
The Power of Together ™

7.9 UUT #3C-1 (No Inlet, Outlet & RH Walls, X-Bracing)

Figure 167 - UUT #3C-1 Pre-Test

Figure 168 - UUT #3C-1 Pre-Test

Figure 169 - UUT #3C-1 Pre-Test

Figure 170 - UUT #3C-1 Pre-Test

Figure 171 - UUT #3C-1 Pre-Test

Figure 172 - UUT #3C-1 Pre-Test

York Custom (PACE) Air Handling Units
Tested Components Summay

UUT3D, YC-6Hx94.5x94.5L, PFAN-PFAN

Cabinet Construction Summary

Side and Top Panel Construction: No walls

Base Construction: 6" welded structural steel base; 16 ga galvanized steel floor

Curb Support: Mounted directly to shaker table structural test fixture

Dampers and Louvers: None

Doors: None

Wall Location Summary

All Runs: Floor only

Lowest Natural Frequency	F-B (Hz)	S-S (Hz)	V (Hz)	
Cabinet	2.90	2.64	3.02	

Component Summary

Item	**Dimensions**				**Passed**
Cabinet	**Length**	**Width**	**Height**	**Total Weight**	**Sds Level**
Nominal cabinet dimensions	94.5	94.5	6	575	1.93
Fan	**Length**	**Width**	**Height**	**Weight**	
Plenum vertical shaft, direct drive, 20" wheel, Baldor, ODP,P,5HP, 230/460-3-60, 185T frame; Twin City	29	29	37	223	1.93
Plenum airfoil, belt drive, 16" wheel, Baldor, TEFC,P,10HP, 230/460-3-60, 215T frame; Twin City	36	34	22	115	1.93

THE VMC GROUP
The Power of Together™

7.12 UUT #3D-2 (Base Assembly, Series Level Shake)

Figure 213 - UUT #3D-2 Pre-Test

Figure 214 - UUT #3D-2 Pre-Test

Figure 215 - UUT #3D-2 Pre-Test

Figure 216 - UUT #3D-2 Pre-Test

Figure 217 - UUT #3D-2 Pre-Test

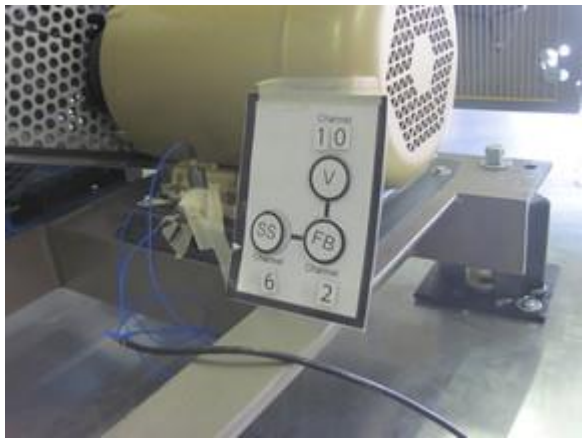

Figure 218 - UUT #3D-2 Pre-Test

Cabinets Sizes			Width (in.)							Test Unit
			Min						Max	
			36	...	96	...	144	...	288	
Height (in.)	Min	36								Interpolated
		⋮								
		96			X		X		X*	UUT1, UUT2A, UUT2B, UUT2C, UUT3D
		⋮	1. Wall and Roof Panel Thickness: 2, 3, 4 2. Wall and Roofm Panel Options: Standard, Thermal Break, Ultra Thermal Break 3. Exterior Materials: Galvanized Steel, Stainless Steel, Prepainted Galvanized Steel, Aluminum Texture 4. Exterior Thickness: 20ga, 18ga, 16ga, 0.04" 5. Interior Materials: Galvanized Steel, Stainless Steel, Prepainted Galvanized Steel, Aluminum Smooth 6. Interior Thickness: 22ga, 20ga, 18ga, 16ga, 0.05" 7. Interior Options: Solid, Perforated 8. Insulation types: Fiberglass, Foam, Fiberglass and Foam Combination, Mineral Wool 9. Floor Panel Materials: Painted Steel Treadplate, Painted Steel (smooth), Stainless Steel Treadplate, Aluminum Treadplate, Galvanized Steel, Stainless Steel (304L and 316L) 10. Floor Thickness: 18ga, 16ga, 14ga, 12ga, 10ga, 0.10", 0.125"								Interpolated
	Max	144					X		X*	UUT3A, UUT3B, UUT3C

*Unit tested at half the width without single side panel to simulate cabinet.

~~All cabinets can have no greater than a 1:1 ratio [Height: Width] or [Height: Length] for OSHPD certification. This is to prevent the selection of a tall unit with a small base.~~

Max Length = 1080"

Supported Configurations (Straight, L-shape, T-shape)

Single tunnel
Side by Side
Single Tunnel with Vestibule
Side by Side with Vestibule
Triple Tunnel (either 3 air tunnels or 2 air tunnels with center vestibule)

Walls between tunnels must be double walls for 288" per tunnel rule.
Single walls between tunnels do not count toward 288".

THE VMC GROUP
The Power of Together™

Steam Coils

Manufacturer	Coil Height (in.)	Coil Length (in.)	Row Qty	Tube Thick (in.)	Tube Diam (in.)	Number of Coils, Stacked	Weight (lbs)	Test Unit
JCI	Approved under OSP-0147-10 (Sds=1.45)							

Water and DX Coils Design

Manufacturer	Coil Height (in.)	Coil Length (in.)	Row Qty	Tube Thick (in.)	Tube Diam (in.)	Number of Coils, Stacked	Weight (lbs)	Weight w/ Fluid (lbs)	Test Unit
JCI	7.5	12	1	0.016	1/2	1	13	15	Interpolated
	35	62	1	0.016	1/2	2 (no rack)	149	167	UUT1
	Coils with the following specifications are OSHPD approved Height: Minimum fin height 7.5" Maximum fin height 126.75" Width: Minimum fin length 12" Maximum fin length 168"								Interpolated
	117	129	8	0.049	5/8	3 (with rack)	4,864	5,648	UUT2B
	126.75	168	12	0.049	5/8	3	6,429	8,362	Interpolated

All coil weights with fluid shown with water

Coil Variables:

1. Fin Material: Aluminum, Copper
2. Fin Thickness: 0.006", 0.008", 0.010"
3. Coil Casing: Galvanized, Stainless
4. Casing Thickness: 20ga, 16ga, 14ga
5. Fin Shape: Flat, and Corrugated
6. Fins per Inch: 6, 8, 9, 10, 11, 12, 13, 14
7. Number of Rows: 1, 2, 3, 4, 5, 6, 7, 8, 9, 10, 11, 12
8. Tube Thickness: 0.016", 0.020", 0.025", 0.032", 0.035", 0.049"
9. Number of Coils Stacked: 1, 2, 3
10. Intermediate Tube Supports: 0, 1, 2, 3

Air to Air Heat Pipe Coils

Manufacturer	Fluid		Number of Coils	Fin Height (in.)	Fin Length (in.)	Row Qty	Weight (lbs)	Test Unit
Colmac	Refrigerant	Min	1	14 7/8	24	2	49	UUT1
				…	…	…	…	Interpolated
			2	119	120	5	2936	UUT2A
		Max	2	119	240	8	9471	Interpolated

All coil weights shown with working fluid (default is R134a refrigerant)

Coils tested with center divider wall included in UUT.

Coil Variables:

1. Fin Material: Aluminum (integral to tube)
2. Fin Thickness: 0.017" mean thickness
3. Coil Casing: Galvanized, Stainless
4. Fin Shape: Integral finned tubes
5. Fins per Inch: 11
6. Number of Rows: 1,2, 3, 4, 5, 6, 7, 8
7. Number of Coils Stacked: 1, 2

THE VMC GROUP
The Power of Together ™

EVAPCOOLER - Premier Industries

Manufacturer	Length (in.)	Width (in.)	Height (in.)	Sump Depth (in.)	Media Options	Pump Options	Dry Weight (lbs)	Weight w/ Fluid (lbs)	Test Unit
Premier	26	24	24	8	Rigid	1/15HP	182	364	UUT1
	Evaporative coolers with the following specifications are OSHPD approved Height: Minimum height 24" Maximum height 130" Width: Minimum width 24" Maximum width 130" Sump Depth: Minimum depth 4" Maximum depth 10"								Interpolated
	26	130	130	10	GlasDEK	1/3HP	1866	3732	UUT2C

Opearting Weight for "Typical" Unit. Dry weight is approximately 50% of operating weight.
Media Depth = 12 in.

THE VMC GROUP
The Power of Together ™

Manufacturer		DIA (in.)	Depth (in.)	Face Area (ft^2)	Frame (in.)	Frame Depth (in.)	Weight (lbs)	Test Unit
AirXchange	Approved under OSP-0147-10 (Sds=1.45)							
Thermotech	Min	28	8	1.4	28	18	163	UUT1
		...	...	...	...	...	...	Interpolated
	Max	126	8	35.9	126	21	3292	UUT2A

THE VMC GROUP
The Power of Together ™

MFR	Type	Drive Arrangement	Discharge	Fan Wheel Diam (in.)	Voltage	Material		Minimum			Maximum			Test Unit
						Fan	Housing & Frame	HP	Frame	Weight (lbs)	HP	Frame	Weight (lbs)	
Twin City	DWDI, Airfoil	Belt Arr 3	Horizontal	Approved under OSP-0147-10 (Sds=1.45)										
	Plenum, Airfoil	Direct Arr 4	Horizontal	12.40	200/208, 230, 460	5052 H32 Aluminum	A 36 Steel	1	143T	145	7.5	184T	319	UUT3A
				13.98	200/208, 230, 460			1.5	184T	174	7.5	184T	348	
				15.75	200/208, 230, 460			1.5	184T	194	7.5	184T	368	
				18.25	200/208, 230, 460			1.5	184T	260	25	256T	804	
				20.00	200/208, 230, 460			1.5	184T	288	25	256T	829	
				22.25	200/208, 230, 460			1.5	184T	374	25	256T	901	
				24.50	200/208, 230, 460			1.5	184T	429	25	256T	951	
				27.00	200/208, 230, 460			2	213T	577	40	286T	1,243	
				30.00	200/208, 230, 460			2	213T	692	50	324T	1,402	
				33.00	200/208, 230, 460			5	254T	905	60	326T	1,857	
				36.50	200/208, 230, 460			10	284T	1,198	100	444T	2,671	UUT3A
				40.25	200/208, 230, 460			10	284T	1,332	100	444T	2,845	
				44.50	200/208, 230, 460			20	324T	1,792	100	444T	3,259	
				49.00	200/208, 230, 460			20	324T	1,989	100	444T	3,481	UUT3C
				54.25	200/208, 230, 460			30	364T	2,477	100	444T	4,345	
				60.00	200/208, 230, 460			30	364T	2,608	100	444T	4,536	
				66.00	200/208, 230, 460			30	364T	2,713	100	444T	4,693	
		Belt Arr 3	Horizontal	12.40	200/208, 230, 460	5052 H32 Aluminum		1.5	145T	256	5	184T	412	UUT1
				13.98	200/208, 230, 460			3	184T	291	10	215T	639	
				15.75	200/208, 230, 460			3	184T	314	15	254T	774	
				18.25	200/208, 230, 460			3	184T	361	25	284T	995	
				20.00	200/208, 230, 460			3	184T	391	30	286T	1,179	
				22.25	200/208, 230, 460			3	184T	448	40	324T	1,303	
				24.50	200/208, 230, 460			3	184T	496	40	324T	1,351	
				27.00	200/208, 230, 460	A 36 Steel		3	184T	620	60	364T	2,185	
				30.00	200/208, 230, 460			3	184T	724	75	365T	2,538	
				33.00	200/208, 230, 460			3	184T	801	75	365T	2,632	
				36.50	200/208, 230, 460			3	184T	1,022	100	404T	3,033	
				40.25	200/208, 230, 460			3	184T	1,164	100	404T	3,246	
				44.50	200/208, 230, 460			3	184T	1,678	100	404T	3,807	
				49.00	200/208, 230, 460			3	184T	1,757	100	404T	3,918	
				54.25	200/208, 230, 460			3	184T	2,403	150	444T	4,945	
				60.00	200/208, 230, 460			3	184T	2,614	150	444T	5,256	UUT3B
				66.00	200/208, 230, 460			3	184T	3,224	150	444T	5,921	
				73.00	200/208, 230, 460			3	184T	3,646	150	444T	6,446	
Comefri	DWDI, Forward Curve	Belt Arr 3	Horizontal	Approved under OSP-0147-10 (Sds=1.45)										
	DWDI, Airfoil	Belt Arr 3	Horizontal	Approved under OSP-0147-10 (Sds=1.85)										

THE VMC GROUP
The Power of Together ™

MULTIPLE Direct Drive Plenum Fans

Manufacturer	Type	Drive Arr	Discharge	Material		Motor MFR	Fan Wheel Diam (in.)	Max Fans High	Voltage	Minimum			Maximum			Test Unit
				Fan	Housing & Frame					HP	Frame	Weight (lbs) Fan + Mtr	HP	Frame	Weight (lbs) Fan + Mtr	
Twin City	Plenum, Airfoil, Enclosed	Direct	Horizontal	Approved under OSP-0147-10 (Sds=1.45)												
Twin City	Multiple Fans, Plenum, Airfoil	Direct	Horizontal	5052 H32 Aluminum	A 36 Steel	Baldor	12.40	3	200/208, 230, 460	1	143T	145	7.5	184T	319	UUT3A
							13.98	3		1.5	184T	174	7.5	184T	348	Interpolated
							15.75	3		1.5	184T	194	7.5	184T	368	
							18.25	3		1.5	184T	260	25	256T	804	
							20.00	3		1.5	184T	288	25	256T	829	
							22.25	3		1.5	184T	374	25	256T	901	
							24.50	2		1.5	184T	429	25	256T	951	
							27.00	2		2	213T	577	40	286T	1,243	
							30.00	2		2	213T	692	50	324T	1,402	
							33.00	2		5	254T	905	60	326T	1,857	
							36.50	2		10	284T	1,198	125	404T	2,671	UUT3A
							40.25	2		1.5	184T	1,332	125	404T	2,845	Interpolated

THE VMC GROUP
The Power of Together ™

FILTERS

Manufacturer	Width (in.)	Height (in.)	Depth (in.)	Weight (lbs)	Depth (in.)	Weight (lbs)	Depth (in.)	Weight (lbs)	Test Unit
American Air Filter	Pleated				Cleanable		Throwaway		
	12	24	2	4	1.8	2	4	3	2	4	0.6	UUT2C
	16	20			1.8			6.5			0.6	XT3, XT7
	20	16			1.8			6.5			0.6	Interpolated
	20	20			2.1			8.1			0.6	XT9
	20	24			2.5			8.4			0.6	XT7, XT9
	20	25			1.8			3			0.6	Interpolated
	24	12			1.8			3			0.6	UUT2C
	24	20			2.5			8.4			0.8	Interpolated
	24	24			2.5			10			0.8	XT2, UUT2C
	Rigid (Standard or Carbon)				Bag		Mini-Pleated		
	12	24	12		11.5	22		4.5	4		3.3	UUT2C
	16	20			12			3.5			3.5	XT3
	20	16			12			3.5			3.5	Interpolated
	20	20			14			4.8			4.5	XT9
	20	24			16.5			5.5			5.3	XT9
	24	12			11.5			4.5			3.3	UUT2C
	24	20			16.5			5.5			5.3	
	24	24			19			8			6.5	XT2, UUT2C
	HEPA (std)											
	12	24	11.5		25							UUT2C
	24	12			25							UUT2C
	24	24			40							UUT2C

XT Approved under OSP-0147-10 (Sds=1.45)

THE VMC GROUP
The Power of Together ™

FILTER FRAMES

Manufacturer	Type	Cabinet			Weight (lbs)	Test Unit
		Width (in.)	Length (in.)	Height (in.)		
JCI	Galvanized or SS Steel Flat	56	23	56	47	Interpolated
		Minimum cabinet height: 56” Maximum cabinet height: 144" Minimum cabinet width: 56” Maximum cabinet width: 288” Frame used for flter types: pleated, cleanable, and throwaway				
		288*	23	144	1048	UUT2C
	Galvanized or SS Steel Angle	56	23	56	87	Interpolated
		Minimum cabinet height: 56” Maximum cabinet height: 144" Minimum cabinet width: 56” Maximum cabinet width: 288” Frame used for flter types: pleated, cleanable, and throwaway				
		144	96	144	653	UUT2B
		288	23	144	1300	Interpolated
	Galvanized or SS Steel Box	56	23	56	58	Interpolated
		Minimum cabinet height: 56” Maximum cabinet height: 144" Minimum cabinet width: 56” Maximum cabinet width: 288” Frame used for flter types: rigid, bag, carbon, and mini-pleat				
		288*	23	144	658	UUT2C
	Aluminum Extruded	56	23	56	55	Interpolated
		Minimum cabinet height: 56” Maximum cabinet height: 144" Minimum cabinet width: 56” Maximum cabinet width: 288” Frame used for flter types: rigid, bag, carbon, and mini-pleat				
		288*	23	144	410	UUT2C
American Air Filter	Galvanized or SS HEPA Holding Frame	56	23	56	114	Interpolated
		Minimum cabinet height: 56” Maximum cabinet height: 144" Minimum cabinet width: 56” Maximum cabinet width: 288” Frame used for flter type: HEPA				
		288*	16	144	1576	UUT2C

*Tested as 144w without a side wall

THE VMC GROUP
The Power of Together ™

Misc

Attenuators

Manufacturer		Bank Height (in.)	Bank Width (in.)	Weight (lbs)	Test Unit
Vibro-Acoustic	Approved under OSP-0147-10 (Sds=1.45)				

Louvers

Manufacturer	Louver		Height (in.)	Width (in.)	Weight (lbs)	Test Unit
JCI Louvers	Horizontal Blade Formed Steel Louver	Min	12	12	12	Interpolated
			29	27	100	UUT1
			⋮	⋮	⋮	Interpolated
			72	48	211	UUT2B
		Max	120	128	760	Interpolated
Ruskin	Vertical Blade Extruded Aluminum Louver	Min	12	12	5	Interpolated
			27	27	100	UUT1
			⋮	⋮	⋮	Interpolated
			72	48	240	UUT2B
		Max	96	48	320	Interpolated

Dampers

Manufacturer	Damper		Height (in.)	Width (in.)	Weight (lbs)	Test Unit
Ruskin	Airflow Measuring Station	Approved under OSP-0147-10 (Sds=1.45)				
	Control Damper Aluminum	Approved under OSP-0147-10 (Sds=1.45)				
	Control Damper Galvanized Steel Blade	Approved under OSP-0147-10 (Sds=1.45)				
	Backdraft Damper Galvanized Steel Blade	Min	15.3	12.0	8.9	Interpolated
			20.0	20.0		UUT1
			⋮	⋮	⋮	Interpolated
			81.5	81.5		UUT3C
		Max	49.8	96.0	232.2	Interpolated
	Smoke Damper Galvanized Steel Blade*	Min	15.3	26.0	60.6	Interpolated
			24.0	24.0		UUT1
			⋮	⋮	⋮	Interpolated
		Max	78.50	47	563.67	Interpolated
	Smoke Damper Aluminum*	Min	15.3	26.0	60.6	Interpolated
			24.0	24.0		UUT1
			⋮	⋮	⋮	Interpolated
			72.0	48.0		UUT2B
		Max	78.50	47	563.67	Interpolated

*Smoke dampers include actuators provided by Ruskin

Diffusers

Manufacturer		Fan Wheel Diam (in.)	Cabinet		Weight (lbs)	Test Unit
			Height (in.)	Width (in.)		
JCI	Approved under OSP-0147-10 (Sds=1.45)					

THE VMC GROUP
The Power of Together ™

Misc

Actuators

Manufacturer	Return Type		Torque (in. lb)	Weight (lbs)	Test Unit
JCI Actuators	Non-Spring Return	Min	35	1.0	UUT2B
			⋮	⋮	
		Max	280	2.9	UUT2B
	Spring Return	Min	Approved under OSP-0147-10 (Sds=1.45)		
		Max			

UV Light Ballasts

Manufacturer	Unit Height (in.)	Unit Width (in.)	UV Fixture Length in. (Qty)	UV Light Core Length (in.)	Weight (lbs)	Test Unit
JCI	Approved under OSP-0147-10 (Sds=1.45)					

Manufacturer	Panel Description	Application	Height (in.)	Width (in.)	Depth (in.)	UV Light Core Length (in.)	Weight (lbs)	Test Unit
JCI	UV light control panel	UV Lights < 8 Amps	Approved under OSP-0147-10 (Sds=1.45)					
	UV light control panel	UV Lights >=8 Amps						

Humidifier Grid

Manufacturer	Cabinet		Weight (lbs)	Test Unit
	Height (in.)	Width (in.)		
Nortec	Approved under OSP-0147-10 (Sds=1.45)			

Light Fixtures & End Devices

Manufacturer	Unit Light Fixture	Description	Test Unit
Kenall Manufacturing	Fixture, Light, 75 Watt, Vr	Light	Approved under OSP-0147-10 (Sds=1.45)
Leviton	Switch, 15 amp, 120V	Switch	
Leviton	Outlet, GFI, 15 amp	Outlet	
Stonco	Fixture, Light, 100 Watt, 120V, Vaporproof	Light	UUT3A
Lithonia	Fixture Flurorscent T8, 120V, 2 tube 4'	Light	UUT3B
Eagle	Outlet, GFI, 15 amp	Outlet	UUT3A, UUT3B
Eagle	Switch, 15 amp, 120V	Switch	UUT3A, UUT3B
	End Devices		
JCI	Sensor, Avg, 8ft, 1k, Nickel	With Molex Connectors, No Enclosure	Approved under OSP-0147-10 (Sds=1.45)
	Current Switch, Spst Relay	1 Amp To 135 Amps,24vac 1/6hp	
	Cable, End Dev Sig, Pigtail	Supply Fan Variable Speed Control Signal	
	Wiring Only	Supply Fan VFD "Run" Contact - Fan Proving	
	Wiring Only	Low temperature Status	
	LTC, SPST, Fixed Reset, 20ft		
	Cooling Valve Wiring	Wiring Only	
	Heating Valve Wiring	Wiring Only	
	Low Pressure Status	Wiring Only	
	Switch, Diff, Press, Manual Reset	W/Molex Connectors	
	Sensor, 8in. 1K RTD Temp, Nickel	Temperature Sensor, Probe, 1k, Type 1, 8 in.	
	High Pressure Status	Wiring Only	
	High Static Pressure Switch (Manual Reset)	High Pressure Cutout	
	Relay, SPDT, 24vac, Coil, Indicator, LED		
	Magnetic Proximity Sensor		
	Switch, Diff, Press, 2CND, L-Bracket		Approved under OSP-0147-10 (Sds=1.45)

THE VMC GROUP
The Power of Together™

Misc

Motor Controls

Manufacturer	Panel Description	Frame	Base	Voltage 200, 230, 460 Min HP	Voltage 200, 230, 460 Max HP	Enclosure Size Height (in.)	Enclosure Size Width (in.)	Enclosure Size Depth (in.)	Enclosure Size Weight (lbs)	Test Unit
	Motor Starters (NEMA3R)	Approved under OSP-0147-10 (Sds=1.45)								
	VFD without Bypass and with Fused and Non-Fused Disconnects (NEMA1)									
	VFD with Bypass and Fused and Non-Fused Integral Disconnects (NEMA1)									
	VFD with and without Bypass Fused and Non-Fused Disconnect (NEMA3R Self Ventilated)									
	Manual Motor Protection Panel									
	VFD with Bypass for Energy Wheels									
	Single Point Power Panel with Supply Fan VFD for Qty: (2) (NEMA3R Ventilated)	KP1	N/A	1	15	28.00	21.00	18.50	194	UUT3A
		KP2	N/A	3	50	52.00	21.00	18.50	314	
		KP3	N/A	25	150	76.00	34.00	22.00	620	UUT3B

FPC Control Enclosures

Manufacturer	Panel Description	Application	Height (in.)	Width (in.)	Depth (in.)	Weight (lbs)	Test Unit
JCI	Approved under OSP-0147-10 (Sds=1.45)						

Unit Disconnects

Manufacturer	Type	Disconnect Amp	Enclsoure Size Height (in.)	Enclsoure Size Width (in.)	Enclsoure Size Depth (in.)	Enclsoure Size Weight (lbs)	Test Unit
RAM/ Schneider Electric	Non-Fused Disconnects (NEMA 1, 3R, 4, 12)	Approved under OSP-0147-10 (Sds=1.45)					
	Fused Disconnects (NEMA 1, 3R, 4, 12)	Approved under OSP-0147-10 (Sds=1.45)					

Transformers

Manufacturer	Size (VA)	Size Height (in.)	Size Width (in.)	Size Depth (in.)	Size Weight (lbs)	Test Unit
JCI	Approved under OSP-0147-10 (Sds=1.45)					

Gas Heat

Manufacturer	Furnace Output (BTUs x 10,000)	Furnace Dimensions Length (in.)	Furnace Dimensions Width (in.)	Furnace Dimensions Height (in.)	Total Furnace Weight (lbs)	Test Unit
Jackson & Church	Approved under OSP-0147-10 (Sds=1.45)					

Electric Heat

Manufacturer	Element type	kW	Heater Dimensions Height (in.)	Heater Dimensions Width (in.)	Total Heater Weight (lbs)	Test Unit
Indeco	Approved under OSP-0147-10 (Sds=1.45)					

Pipe Chase

Manufacturer	Height (in.)	Length (in.)	Depth (in.)	Weight (lbs)	Test Unit
JCI	Approved under OSP-0147-10 (Sds=1.45)				

THE VMC GROUP
The Power of Together ™

1 NOTE:
*EQUIVALENT SUPPORT WALL SHALL HAVE
(SHEAR WALL WIDTH/AHU UNIT WIDTH)
GREATER THAN OR EQUAL TO TESTED VALUE OF
(137.38"−76.00")/137.38 = 0.447
AND BE CONTINUOUS TOP TO BOTTOM

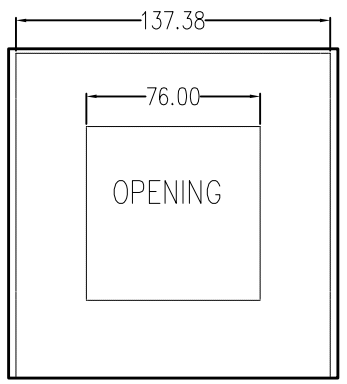

EQUIVALENT SUPPORT WALL
(INTERIOR PARTITION)
SECTION C−C

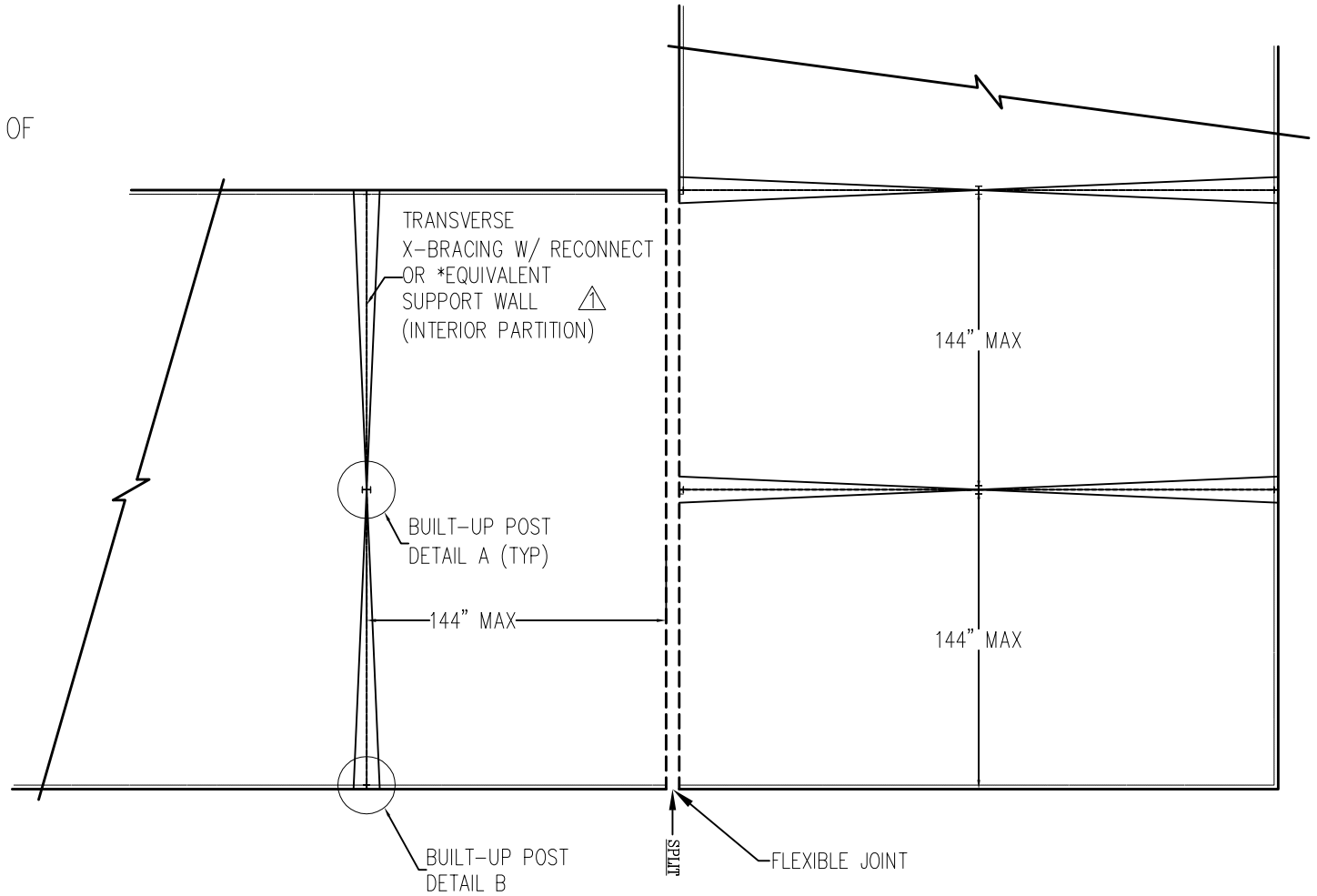

W/ FLEXIBLE JOINT

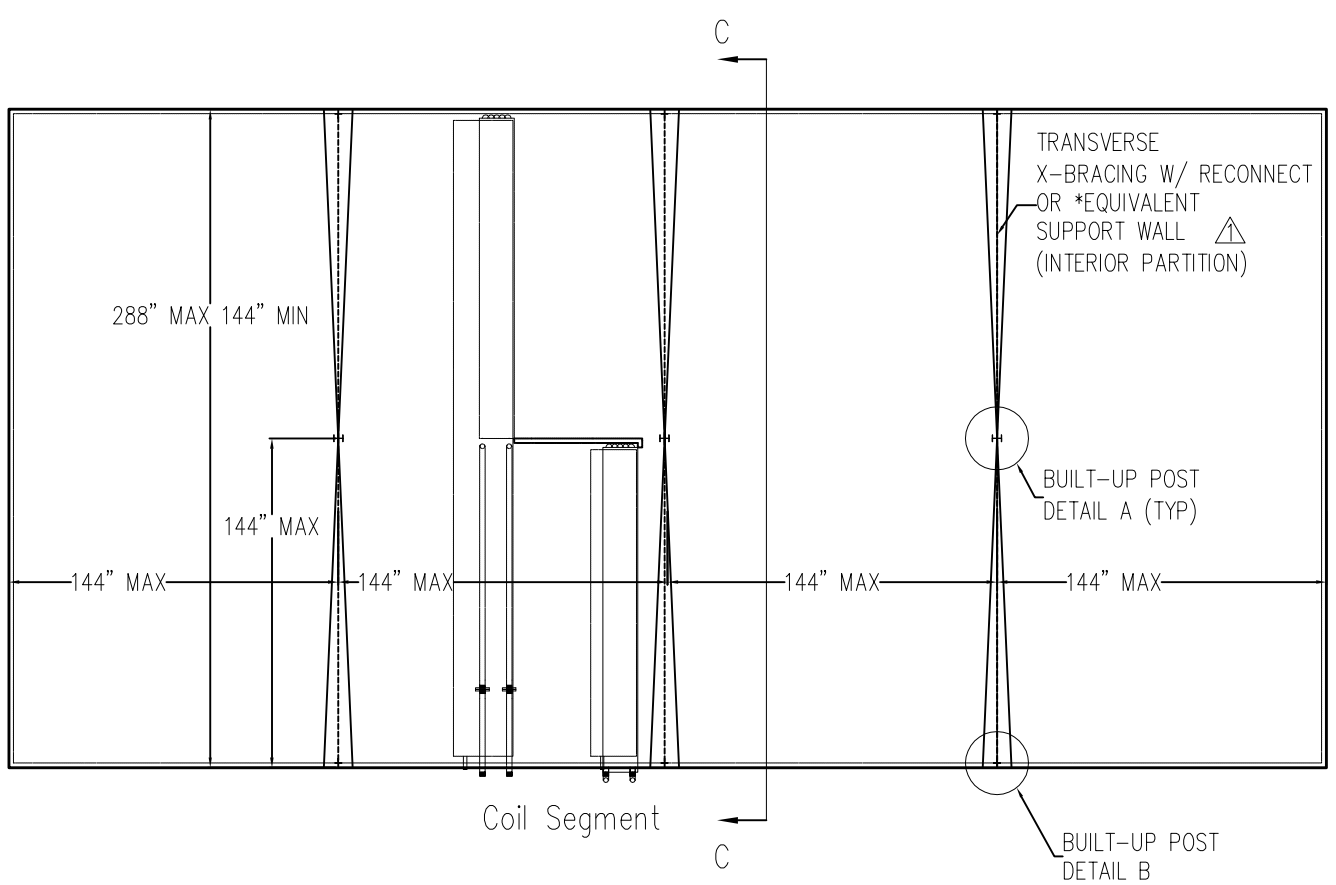

W/ END WALL

PLAN VIEW: INTERIOR SEISMIC X−BRACING REQUIREMENTS

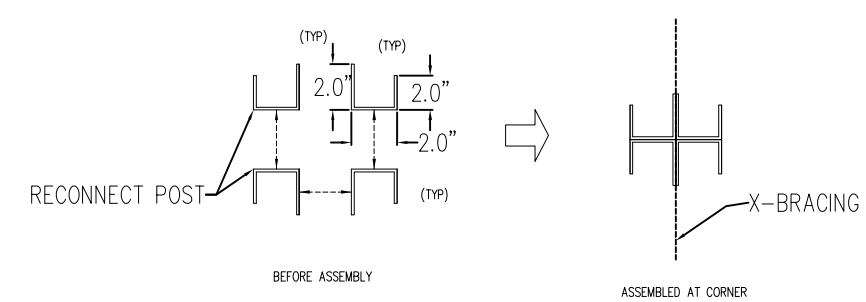

DETAIL A
RECONNECTS VERTICAL POSTS
CROSS SECTION
(W/ X−BRACING)

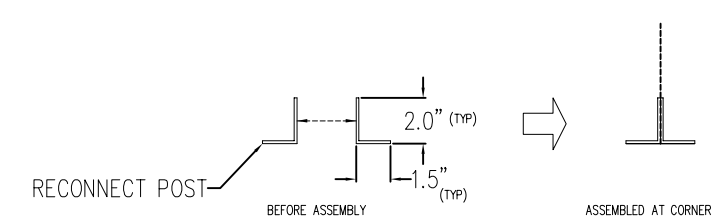

DETAIL B
RECONNECTS VERTICAL POSTS
CROSS SECTION
(W/ X−BRACING)

FILE NAME: JCI Solution YC Seismic Bracing Wide.dwg				DRAWN BY: HJ DUBENSKY	ISSUED ON: 04/02/12	TITLE: JCI−YORK CUSTOM AHUs Unit W > 144" Bracing and Reconnect Assy Requirements	
REV.	DATE	BY	DESCRIPTION	PRODUCT TYPE: YC	CHECKED BY:		
				THIS DRAWING IS PROPERTY OF JOHNSON CONTROLS INC. AND CANNOT BE REPRODUCED NOR DELIVERED TO OTHERS WITHOUT EXPRESS WRITTEN PERMISSION FROM JOHNSON CONTROLS INC.	Johnson Controls	JOB NO.: OSHPD SEISMIC	
						DRAWING NO.:	
						SIZE: BB	SHEET 1 OF: 1

NOTE:
*EQUIVALENT SUPPORT WALL SHALL HAVE (SHEAR WALL WIDTH/AHU UNIT WIDTH)
GREATER THAN OR EQUAL TO TESTED VALUE OF
(137.38"−76.00")/137.38 = 0.447
AND BE CONTINUOUS FROM TOP TO BOTTOM

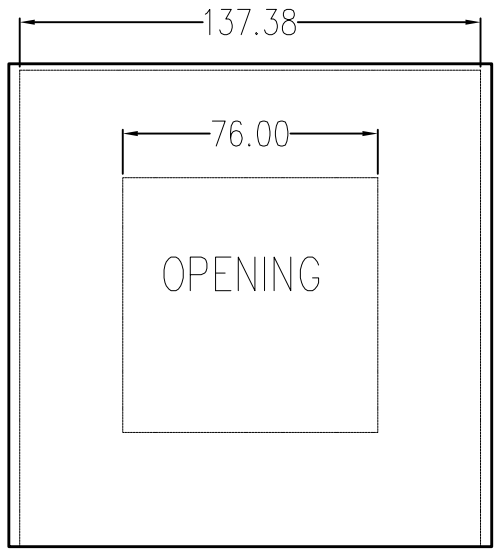

EQUIVALENT SUPPORT WALL
(INTERIOR PARTITION)
SECTION B−B

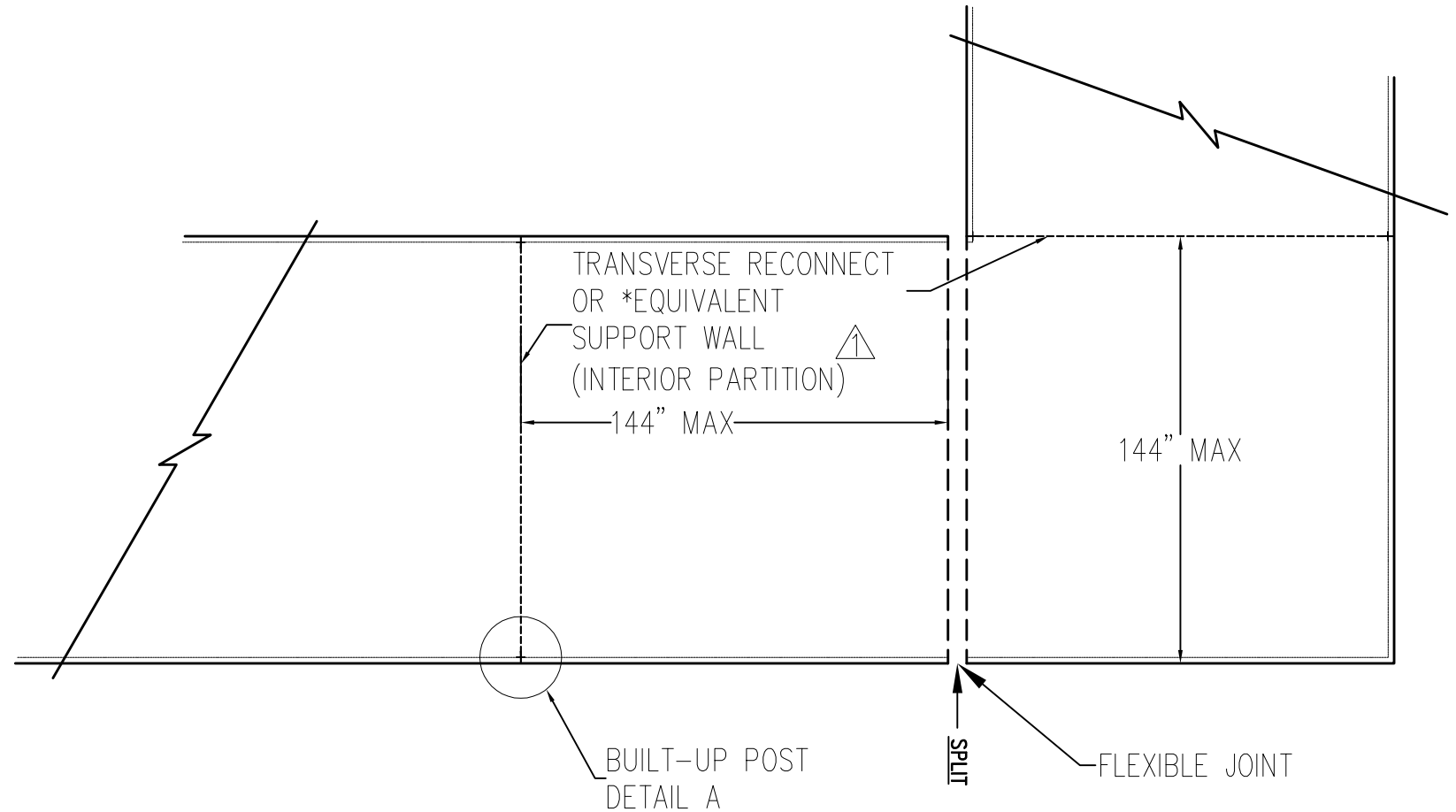

W/ FLEXIBLE JOINT

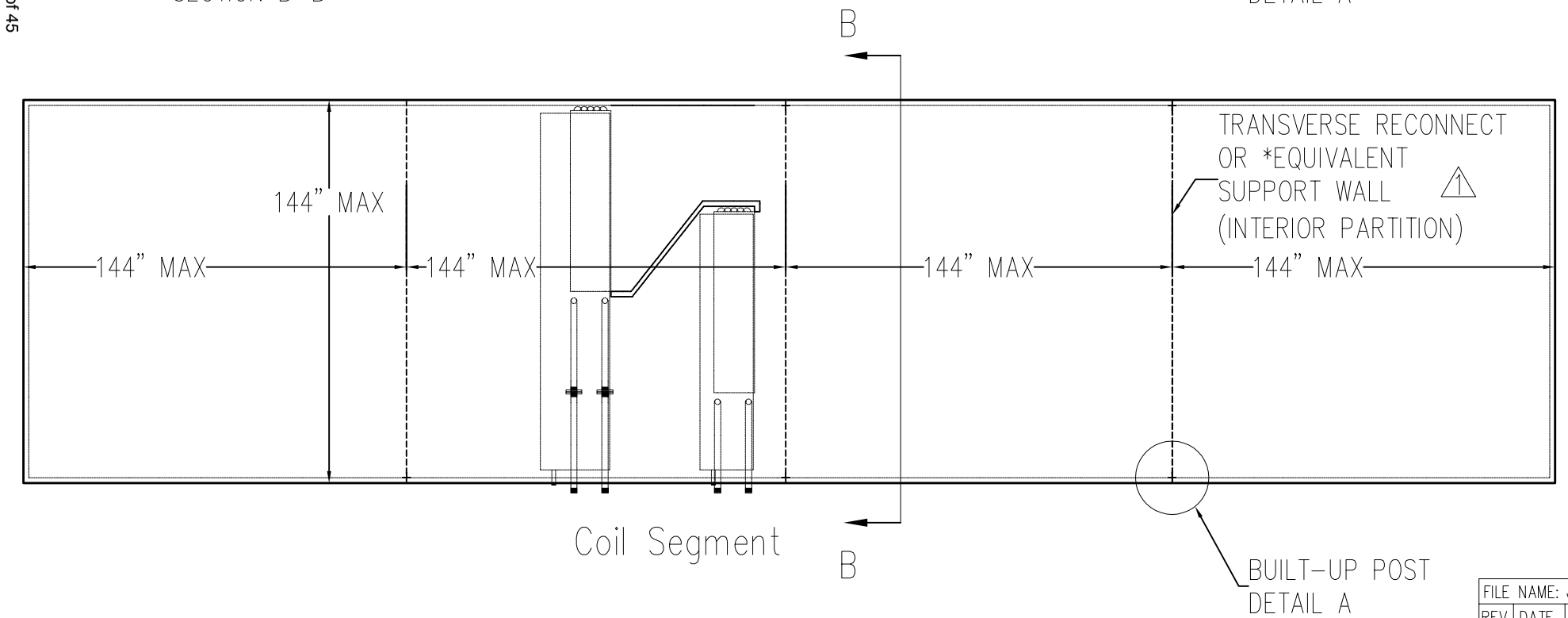

PLAN VIEW: INTERIOR SEISMIC BRACING REQUIREMENTS

W/ END WALL

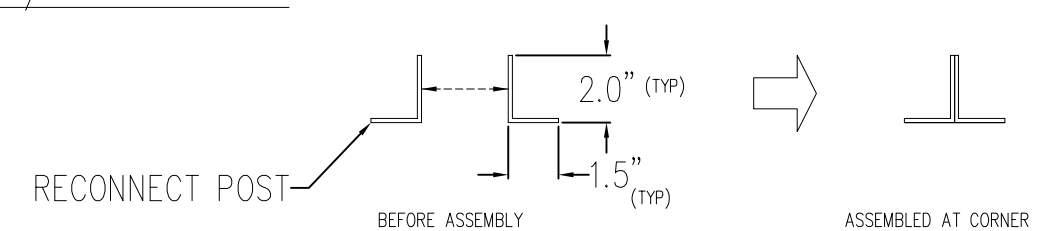

DETAIL A

RECONNECTS VERTICAL POSTS
CROSS SECTION

FILE NAME: JCI Solution YC Seismic Reconnect Narrow.dwg				DRAWN BY: HJ DUBENSKY	ISSUED ON: 04/03/12	TITLE: JCI−YORK CUSTOM AHUs Unit W < or = 144" Reconnect Assy Requirements	
REV.	DATE	BY	DESCRIPTION	PRODUCT TYPE: YC	CHECKED BY:		
				THIS DRAWING IS PROPERTY OF JOHNSON CONTROLS INC. AND CANNOT BE REPRODUCED NOR DELIVERED TO OTHERS WITHOUT EXPRESS WRITTEN PERMISSION FROM JOHNSON CONTROLS INC.	Johnson Controls	JOB NO.: OSHPD SEISMIC	
						DRAWING NO.:	
						SIZE: BB	SHEET 1 OF: 1

SECTION LIST	
SECT #	DESCRIPTION
MB	MIXING BOX
VF-1	VEE FILTER
HC-1	HEATING COIL
CC-1	COOLING COIL
PL-1	PLENUM
IC-1	IFB COIL
PL-2	PLENUM
PFAN	SUPPLY FAN
NS-1	NON-STANDARD
HC-2	HEATING COIL
HF-1	HEPA FILTER
DP	DISCHARGE PLENUM
VT-1	SERVICE VESTIBULE

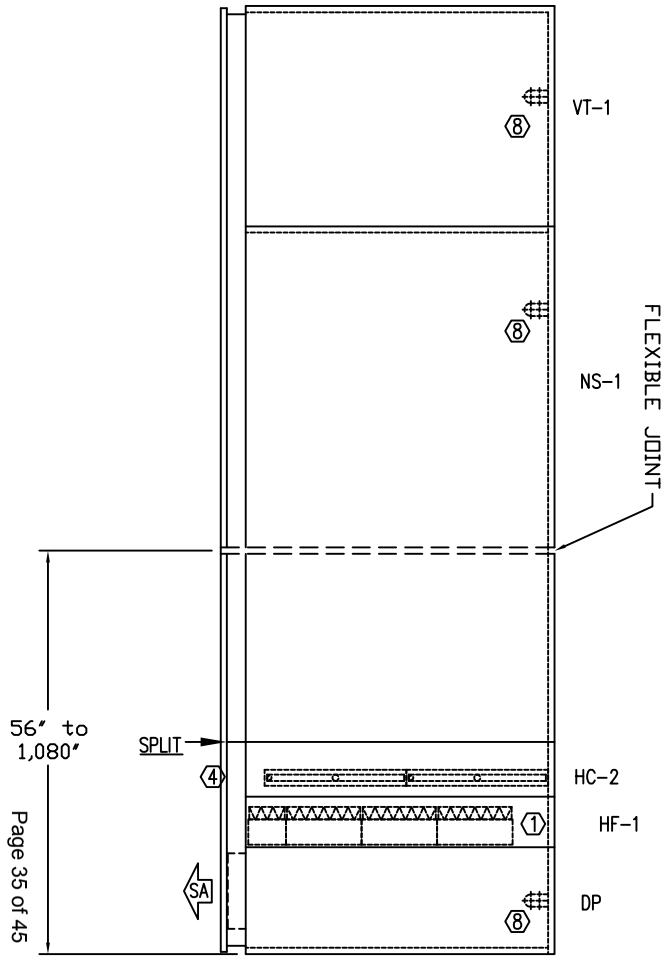

SIDE ELEVATION VIEW

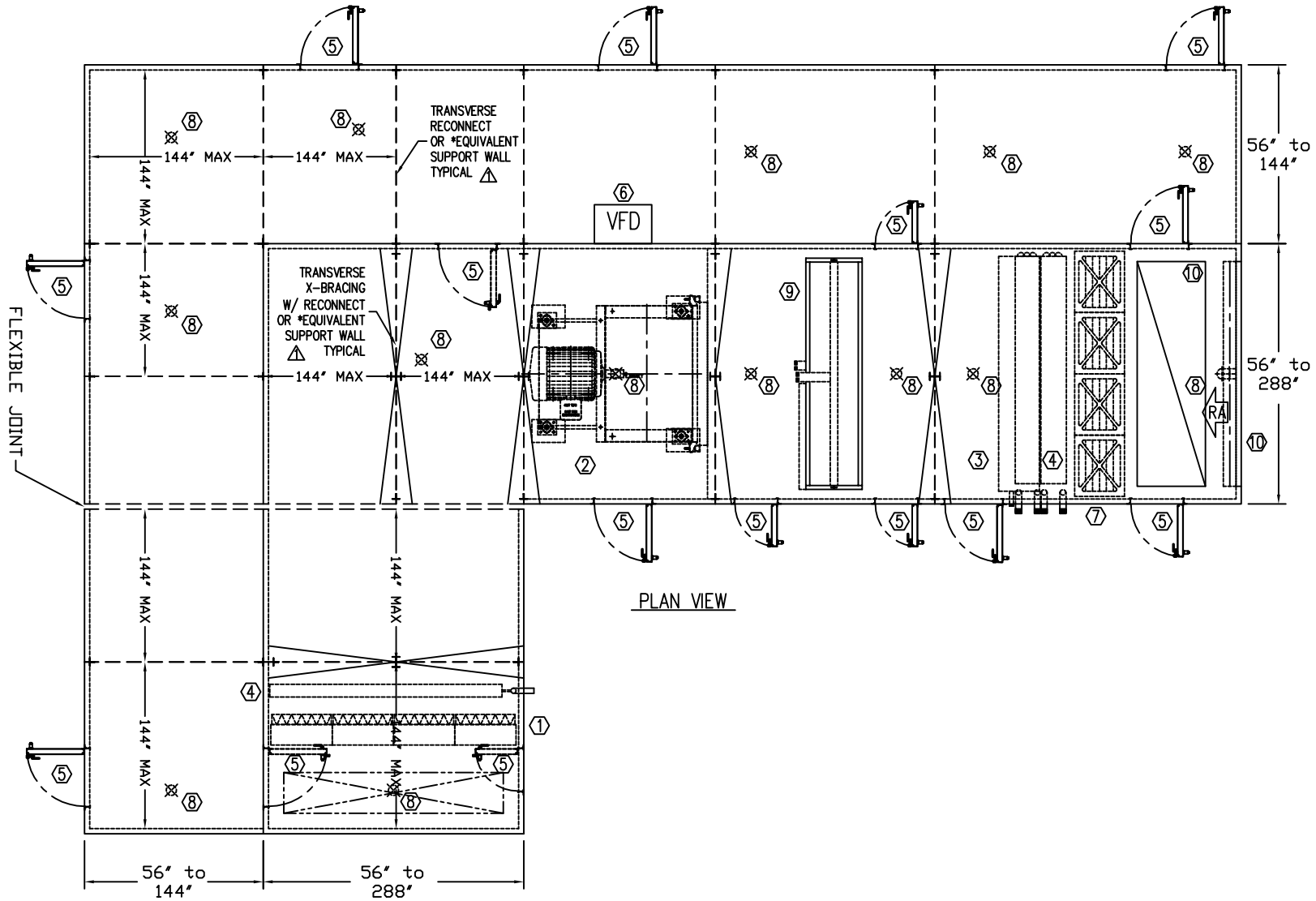

PLAN VIEW

See Appendix - Component List

1. HEPA Filter
2. Fan (Plenum)
3. Cooling Coil
4. Heating Coil
5. Access Door
6. VFD, Motor Control
7. Angle Filter
8. Vapor Proof Light
9. Integral Face & Bypass Coil
10. Control Damper
11. Motor Removal Rail

⚠ REFER TO X-BRACING W/ RECONNECT, RECONNECT, OR EQUIVALENT SUPPORT WALL DRAWING

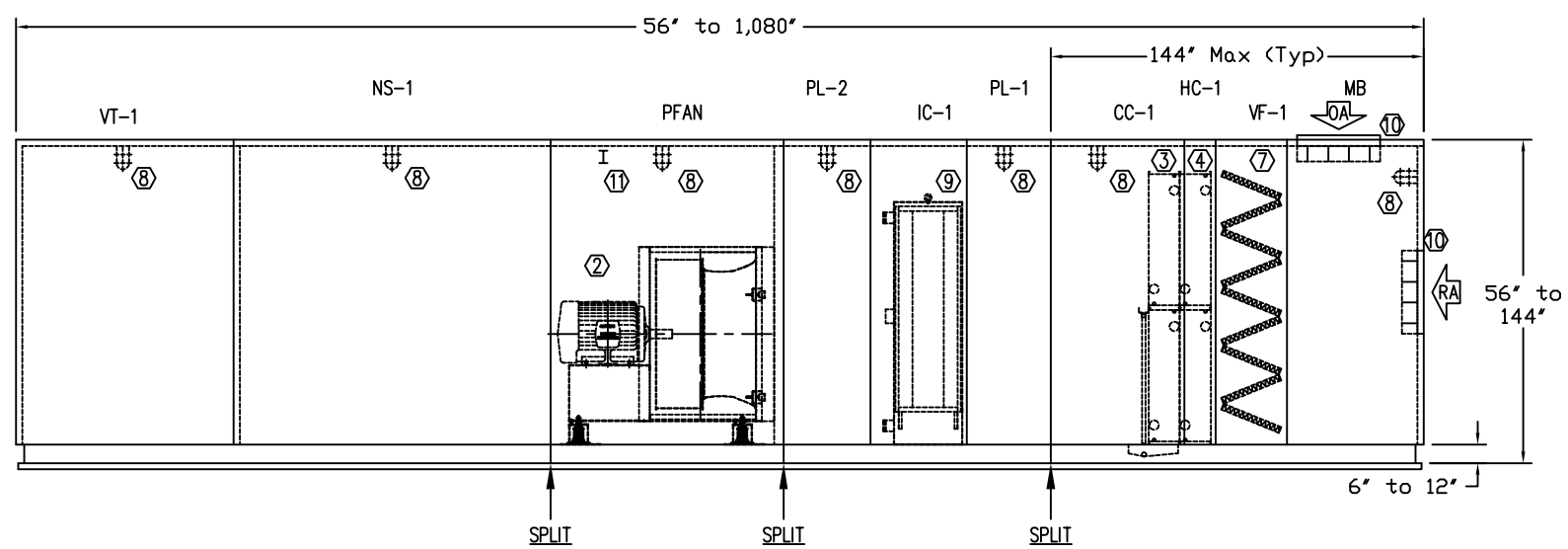

ELEVATION VIEW

Unit Construction Information:

1. Wall and Roof Panel Thickness: 2", 3", 4".
2. Wall and Roof Panel Options: Standard, Thermal Break, Ultra Thermal Break.
3. Exterior Materials: Galvanized Steel, Stainless Steel, Pre-painted Galvanized Steel, Aluminum Texture.
4. Exterior Thickness: 20ga, 18ga, 16ga, 0.04".
5. Interior Materials: Galvanized Steel, Stainless Steel, Pre-painted Galvanized Steel, Aluminum Smooth.
6. Interior Thickness: 22ga, 20ga, 18ga, 16ga, 0.05"
7. Interior Options: Solid, Perforated.
8. Insulation Types: Fiberglass, Foam, Fiberglass and Foam Combination, Mineral Wool.
9. Floor Panel Materials: Painted Steel Tread Plate, Painted Steel (smooth), Stainless Steel Tread Plate, Aluminum Tread Plate, Galvanized Steel, Stainless Steel (304L and 316L).
10. Floor Thickness: 18ga, 16ga, 14ga, 12ga, 10ga, 0.10", 0.125".

DIMENSIONAL TOLERANCES - UNIT: ±0.5 / PIPING: ±2
UNIT COMPONENTS ARE SHOWN FOR REPRESENTATIONAL PURPOSES ONLY

FILE NAME:

REV.	DATE	BY	DESCRIPTION

YORK Custom AHU

FOR

L SHAPED UNIT
Seismic Certification

Johnson Controls

DRAWN BY	JOB NUMBER:
KMS	OSHPD UNIT F
DATE 4/03/2012	SHEET OF

See Appendix - Component List

1. Rigid Filter
2. Fan (Plenum)
3. Cooling Coil
4. Heating Coil
5. Flat Filter
6. Control Damper
7. Heat Wheel
8. Fan (Plenum)
9. Access Door
10. Vapor Proof Light

SECTION LIST – SUPPLY UNIT	
SECT #	DESCRIPTION
IP	INLET PLENUM
FF-1	FLAT FILTER
PL-1	PLENUM
NS-1	NON-STANDARD
PL-2	PLENUM
RF-1	RIGID FILTER
PL-3	PLENUM
HC-1	HEATING COIL
PL-4	PLENUM
CC-1	COOLING COIL
PFAN	SUPPLY FAN

SECTION LIST – EXHAUST UNIT	
SECT #	DESCRIPTION
MB	MIXING BOX
FF-2	FLAT FILTER
PL-1	PLENUM
NS-1	NON-STANDARD
PL-2	PLENUM
PFAN	SUPPLY FAN

Unit Construction Information:

1. Wall and Roof Panel Thickness: 2", 3", 4".
2. Wall and Roof Panel Options: Standard, Thermal Break Ultra Thermal Break.
3. Exterior Materials: Galvanized Steel, Stainless Steel, Pre-painted Galvanized Steel, Aluminum Texture.
4. Exterior Thickness: 20ga, 18ga, 16ga, 0.04".
5. Interior Materials: Galvanized Steel, Stainless Steel, Pre-painted Galvanized Steel, Aluminum Smooth.
6. Interior Thickness: 22ga, 20ga, 18ga, 16ga, 0.05"
7. Interior Options: Solid, Perforated.
8. Insulation types: Fiberglass, Foam, Fiberglass and Foam Combination, Mineral Wool.
9. Floor Panel Materials: Painted Steel Tread Plate, Painted Steel (smooth), Stainless Steel Tread Plate, Aluminum Tread Plate, Galvanized Steel, Stainless Steel (304L and 316L).
10. Floor Thickness: 18ga, 16ga, 14ga, 12ga, 10ga, 0.10" 0.125".

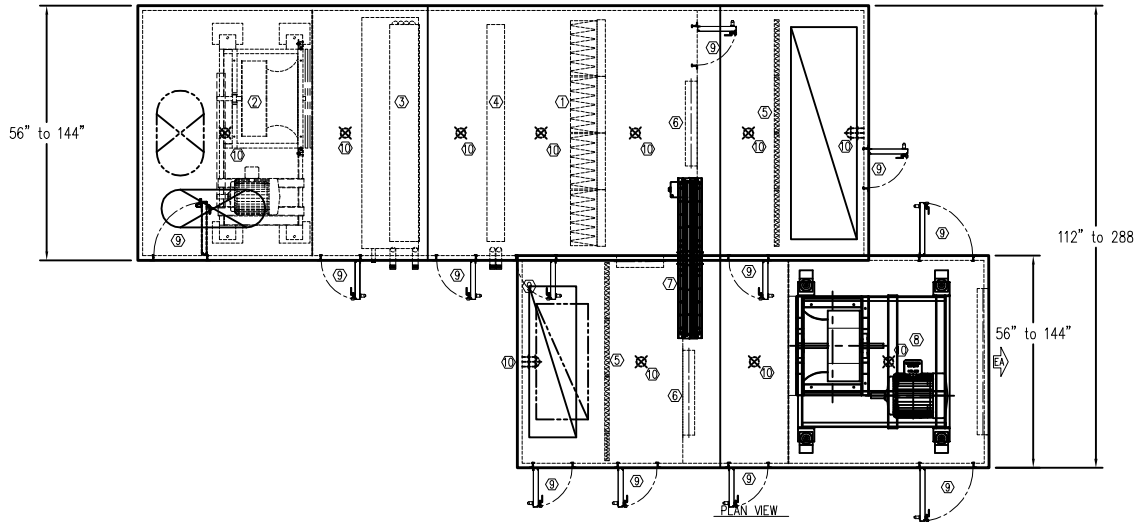

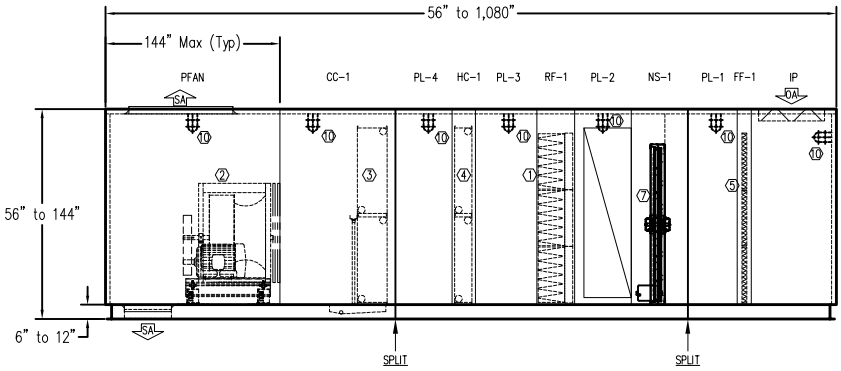

ELEVATION VIEW – SUPPLY UNIT

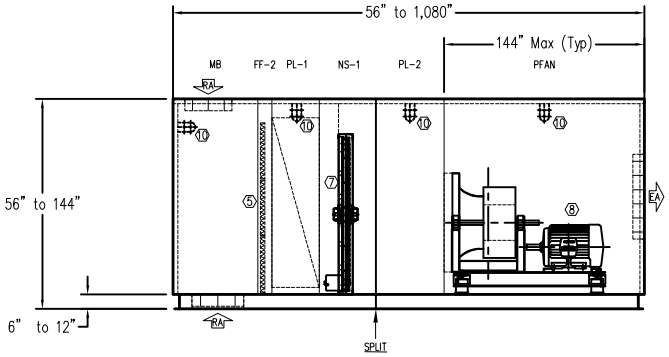

ELEVATION VIEW –EXHAUST UNIT

FILE NAME:

REV.	DATE	BY	DESCRIPTION

DIMENSIONAL TOLERANCES – UNIT: ±0.5 / PIPING: ±2
UNIT COMPONENTS ARE SHOWN FOR REPRESENTATIONAL PURPOSES ONLY

Solution AHU	Johnson Controls	FOR Side by Side Unit Seismic Certificatio	DRAWN BY HJD	JOB NUMBER OSHPD UNIT B
			DATE 02/17/12	SHEET 1 OF 1

Unit Construction Information:

1. Wall and Roof Panel Thickness: 2", 3", 4".
2. Wall and Roof Panel Options: Standard, Thermal Break, Ultra Thermal Break.
3. Exterior Materials: Galvanized Steel, Stainless Steel, Pre-painted Galvanized Steel, Aluminum Texture.
4. Exterior Thickness: 20ga, 18ga, 16ga, 0.04".
5. Interior Materials: Galvanized Steel, Stainless Steel, Pre-painted Galvanized Steel, Aluminum Smooth.
6. Interior Thickness: 22ga, 20ga, 18ga, 16ga, 0.05"
7. Interior Options: Solid, Perforated.
8. Insulation Types: Fiberglass, Foam, Fiberglass and Foam Combination, Mineral Wool.
9. Floor Panel Materials: Painted Steel Tread Plate, Painted Steel (smooth), Stainless Steel Tread Plate, Aluminum Tread Plate, Galvanized Steel, Stainless Steel (304L and 316L).
10. Floor Thickness: 18ga, 16ga, 14ga, 12ga, 10ga, 0.10", 0.125".

SECTION LIST – AHU-A	
SECT #	DESCRIPTION
IP	INLET PLENUM
PFANR	RETURN FAN
ECI	INDOOR ECONOMIZER
FF-1	FLAT FILTER
HC-1	HEATING COIL
PL-1	PLENUM
CC-1	COOLING COIL
PL-2	PLENUM
PFAN	SUPPLY FAN
ST-1	SOUND ATTENUATOR
NS-1	NON-STANDARD
RF-1	RIGID FILTER
DP	DISCHARGE PLENUM

SECTION LIST – AHU-B	
SECT #	DESCRIPTION
IP	INLET PLENUM
PFANR	RETURN FAN
ECI	INDOOR ECONOMIZER
NS-1	NON-STANDARD
FF-1	FLAT FILTER
HC-1	HEATING COIL
PL-1	PLENUM
CC-1	COOLING COIL
PL-2	PLENUM
PFAN	SUPPLY FAN
ST-1	SOUND ATTENUATOR
NS-2	NON-STANDARD
RF-1	RIGID FILTER
DP	DISCHARGE PLENUM
VT-1	SERVICE VESTIBULE

See Appendix - Component Lis

1. Rigid Filter
2. Multiple Fans (Plenum)
3. Cooling Coil
4. Weather Hood
5. Heating Coil
6. Flat Filter
7. Control Damper
8. Fan (Plenum)
9. Access Door
10. Motor Removal Rail
11. Louver
12. VFD, Motor Control
13. Fluorescent Light
14. Sound Attenuator

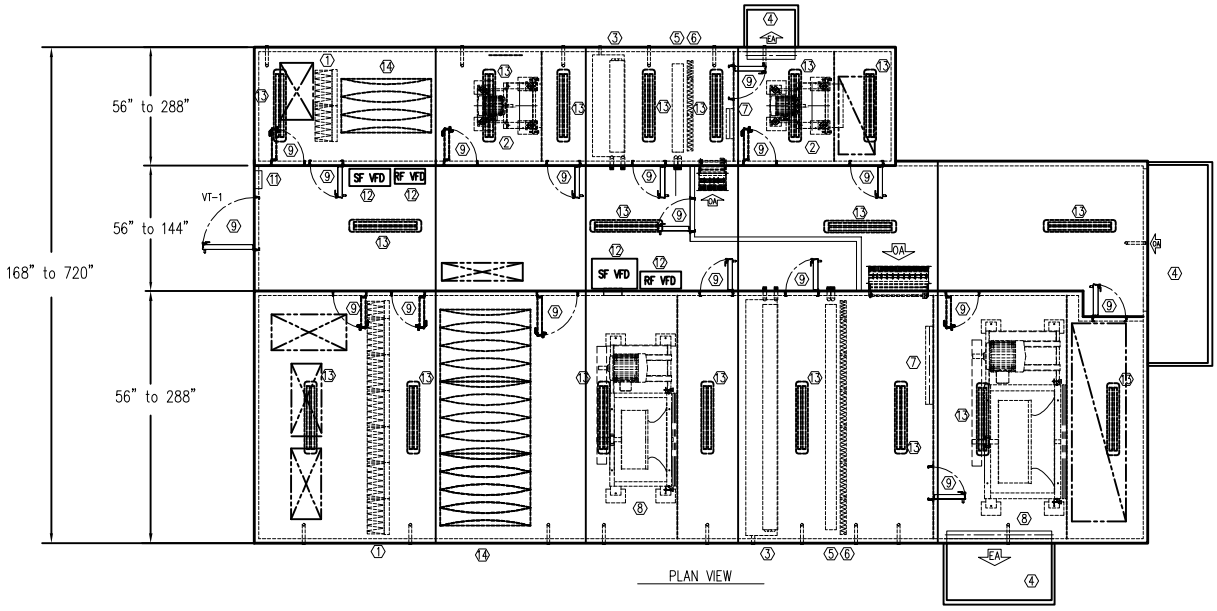

PLAN VIEW

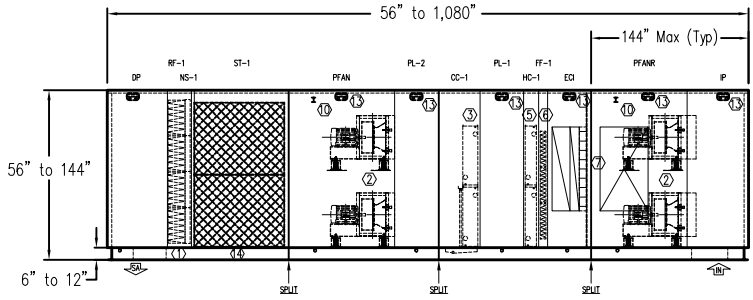

ELEVATION VIEW – AHU-A

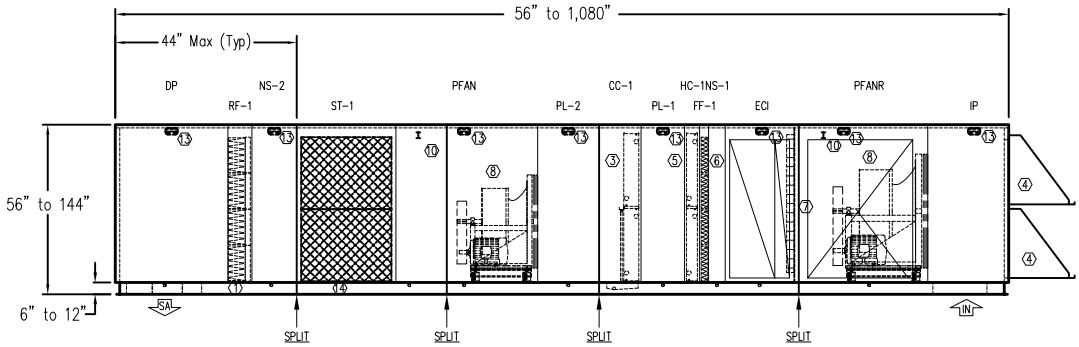

ELEVATION VIEW – AHU-B

FILE NAME:

REV.	DATE	BY	DESCRIPTION

DIMENSIONAL TOLERANCES – UNIT: ±0.5 / PIPING: ±2
UNIT COMPONENTS ARE SHOWN FOR REPRESENTATIONAL PURPOSES ONLY

YORK Custom AHU	Johnson Controls	FOR Side by Side Units with Shared Vestibule Seismic Certification	DRAWN BY KMS	JOB NUMBER OSHPD UNIT D	
			DATE 02/17/12	SHEET 1	OF 1

Unit Construction Information:

1. Wall and Roof Panel Thickness: 2", 3", 4".
2. Wall and Roof Panel Options: Standard, Thermal Break, Ultra Thermal Break.
3. Exterior Materials: Galvanized Steel, Stainless Steel, Pre-painted Galvanized Steel, Aluminum Texture.
4. Exterior Thickness: 20ga, 18ga, 16ga, 0.04".
5. Interior Materials: Galvanized Steel, Stainless Steel, Pre-painted Galvanized Steel, Aluminum Smooth.
6. Interior Thickness: 22ga, 20ga, 18ga, 16ga, 0.05"
7. Interior Options: Solid, Perforated.
8. Insulation Types: Fiberglass, Foam, Fiberglass and Foam Combination, Mineral Wool.
9. Floor Panel Materials: Painted Steel Tread Plate, Painted Steel (smooth), Stainless Steel Tread Plate, Aluminum Tread Plate, Galvanized Steel, Stainless Steel (304L and 316L).
10. Floor Thickness: 18ga, 16ga, 14ga, 12ga, 10ga, 0.10", 0.125".

See Appendix - Component List

1. Rigid Filter
2. Fan (Plenum)
3. Cooling Coil
4. Energy Recovery Wheel
5. Heating Coil
6. Bag Filter
7. Flat Filter
8. Control Damper
9. Fan (Plenum)
10. Access Door
11. Motor Removal Rail
12. VFD, Motor Control
13. VFD, Energy Recovery Wheel Motor Control
14. Single Point Power Panel
15. Vapor Proof Light

SECTION LIST	
SECT #	DESCRIPTION
IP	INLET PLENUM
PL-1	PLENUM
BF-1	BAG FILTER
RF-1	FUTURE CARBON FILTER (BY OTHERS)
PL-2	PLENUM
NS-1	ENERGY WHEEL
PL-3	PLENUM
HC-1	HEATING COIL
CC-1	COOLING COIL
PL-4	PLENUM
CC-2	COOLING COIL
PFAN	SUPPLY FAN
DP	DISCHARGE PLENUM
VT-1	SERVICE VESTIBULE
IPX	INLET PLENUM
FF-1	FLAT FILTER
PL-5	PLENUM
NS-2	ENERGY WHEEL
PL-6	PLENUM
PFANX	EXHAUST FAN
VT-2	SERVICE VESTIBULE

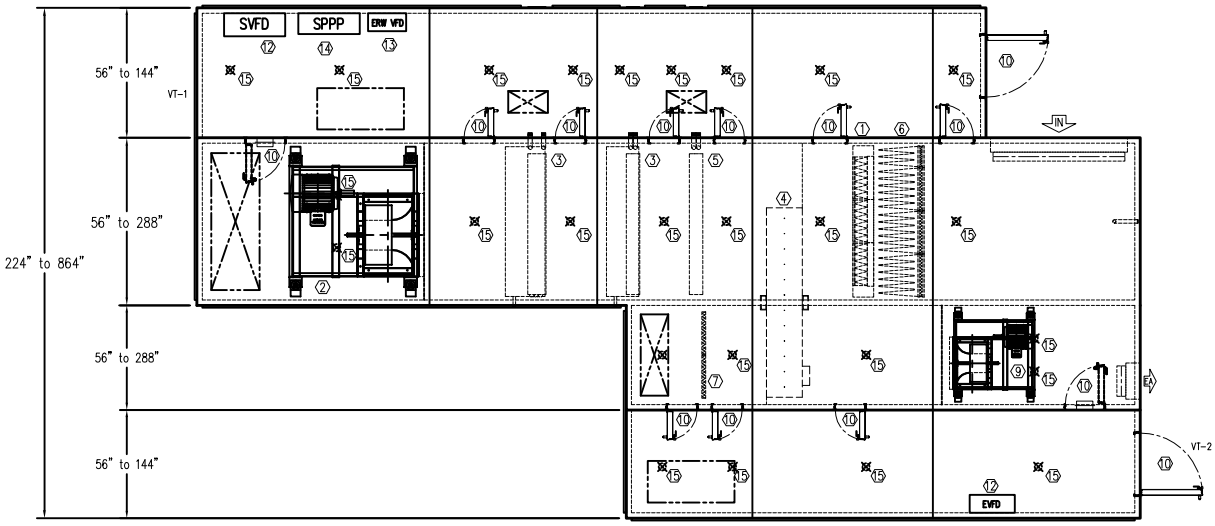

PLAN VIEW

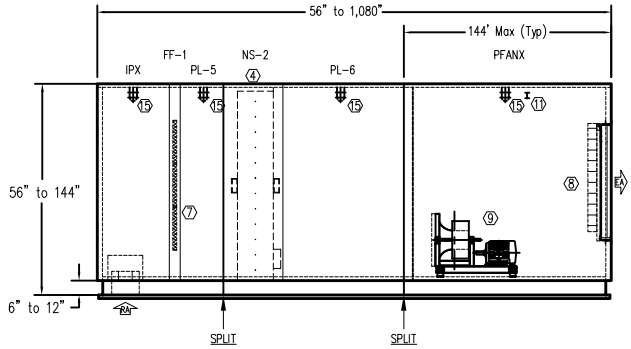

ELEVATION VIEW - EXHAUST

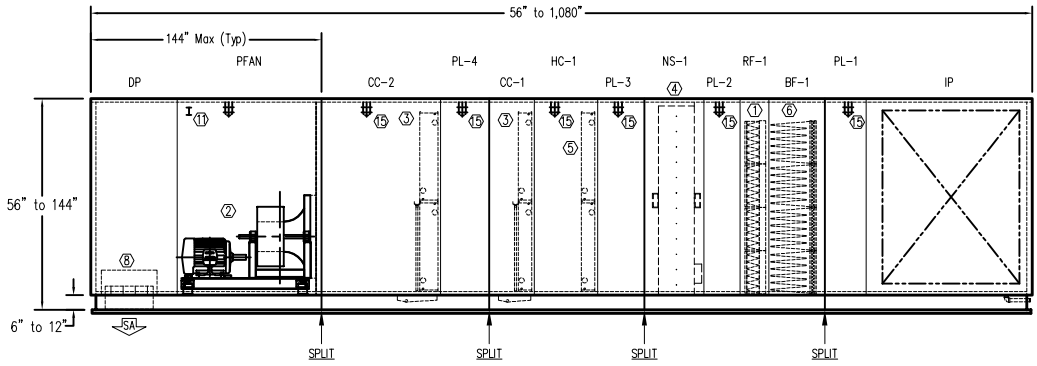

ELEVATION VIEW - SUPPLY

FILE NAME:

REV.	DATE	BY	DESCRIPTION

DIMENSIONAL TOLERANCES - UNIT: ±0.5 / PIPING: ±2
UNIT COMPONENTS ARE SHOWN FOR REPRESENTATIONAL PURPOSES ONLY

YORK Custom AHU	Johnson Controls	FOR Side by Side Units with Vestibules Seismic Certification	DRAWN BY KMS	JOB NUMBER OSHPD UNIT E
			DATE 02/17/12	SHEET 1 OF 1

See Appendix - Component List

1. Rigid Filter
2. Fan (Plenum)
3. Cooling Coil
4. Humidifier
5. Heating Coil
6. Flat Filter
7. Control Damper
8. Fan (Plenum)
9. Access Door
10 Motor Removal Rail
11. Vapor Proof Light

Unit Construction Information:

1. Wall and Roof Panel Thickness: 2", 3", 4".
2. Wall and Roof Panel Options: Standard, Thermal Break, Ultra Thermal Break.
3. Exterior Materials: Galvanized Steel, Stainless Steel, Pre-painted Galvanized Steel, Aluminum Texture.
4. Exterior Thickness: 20ga, 18ga, 16ga, 0.04".
5. Interior Materials: Galvanized Steel, Stainless Steel, Pre-painted Galvanized Steel, Aluminum Smooth.
6. Interior Thickness: 22ga, 20ga, 18ga, 16ga, 0.05"
7. Interior Options: Solid, Perforated.
8. Insulation Types: Fiberglass, Foam, Fiberglass and Foam Combination, Mineral Wool.
9. Floor Panel Materials: Painted Steel Tread Plate, Painted Steel (smooth), Stainless Steel Tread Plate, Aluminum Tread Plate, Galvanized Steel, Stainless Steel (304L and 316L).
10. Floor Thickness: 18ga, 16ga, 14ga, 12ga, 10ga, 0.10", 0.125".

SECTION LIST	
SECT #	DESCRIPTION
IP	INLET PLENUM
PL-1	PLENUM
PFANR	RETURN FAN
ECI	INDOOR ECONOMIZER
PL-2	PLENUM
FF-1	FLAT FILTER
HC-1	HEATING COIL
HUM-1	HUMIDIFIER
CC-1	COOLING COIL
PL-3	PLENUM
PFAN	SUPPLY FAN
RF-1	RIGID FILTER
PL-4	PLENUM
RF-2	RIGID FILTER
DP	DISCHARGE PLENUM

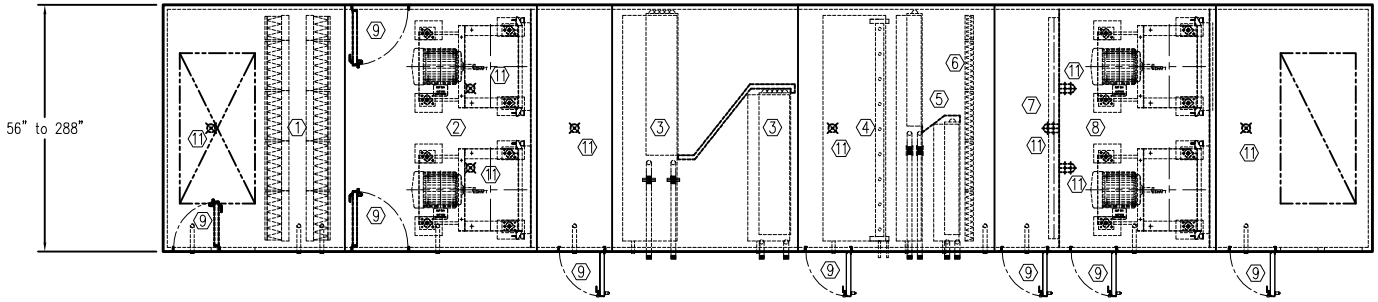

PLAN VIEW

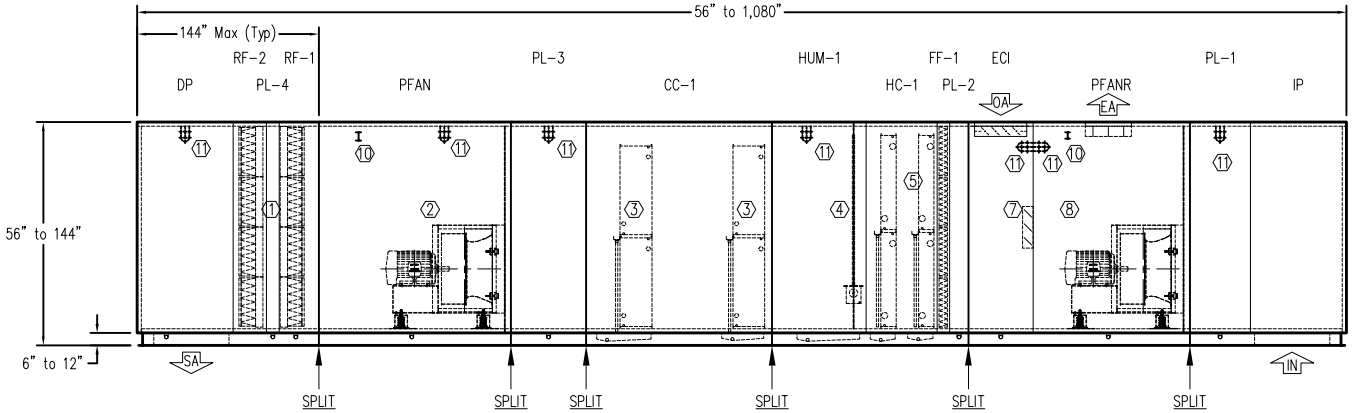

ELEVATION VIEW

DIMENSIONAL TOLERANCES - UNIT: ±0.5 / PIPING: ±2
UNIT COMPONENTS ARE SHOWN FOR REPRESENTATIONAL PURPOSES ONLY

FILE NAME:

REV.	DATE	BY	DESCRIPTION

YORK Custom AHU

FOR

SINGLE WIDE UNIT
SEISMIC CERTIFICATION

Johnson Controls

DRAWN BY	JOB NUMBER:
HJD	OSHPD UNIT A
DATE 02/17/12	SHEET 1 OF 1

SECTION LIST	
SECT #	DESCRIPTION
IP	INLET PLENUM
PFANR	RETURN FAN
ECO	OUTDOOR ECONOMIZER
PL-1	PLENUM
RF-1	RIGID FILTER
PL-2	PLENUM
FF-1	FLAT FILTER
PL-3	PLENUM
AB-1	AIR BLENDER
HC-1	HEATING COIL
HUM-1	HUMIDIFIER
CC-1	COOLING COIL
PL-4	PLENUM
PFAN	SUPPLY FAN
HF-1	HEPA FILTER
DP	DISCHARGE PLENUM
VT-1	SERVICE VESTIBULE

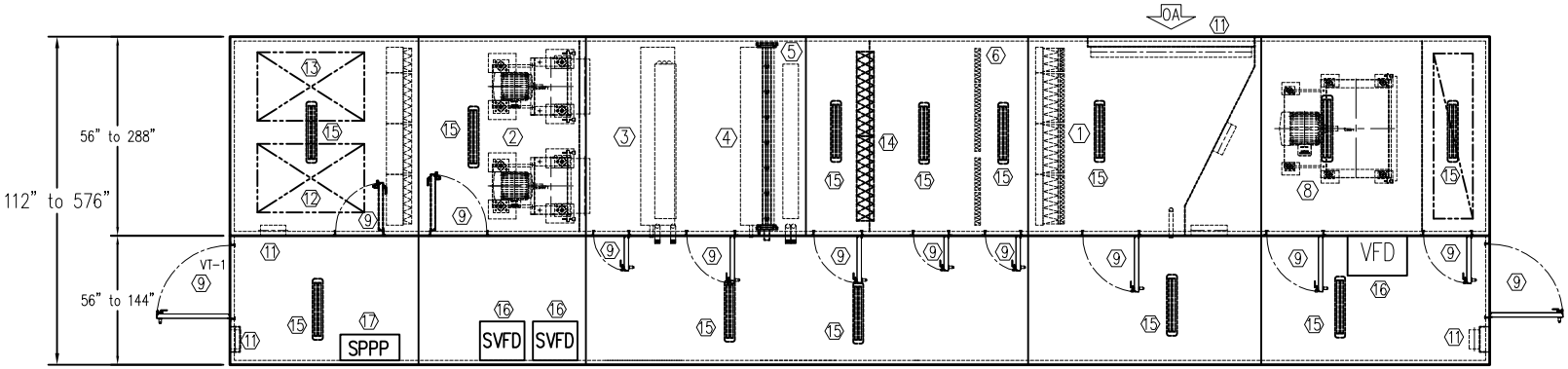

PLAN VIEW

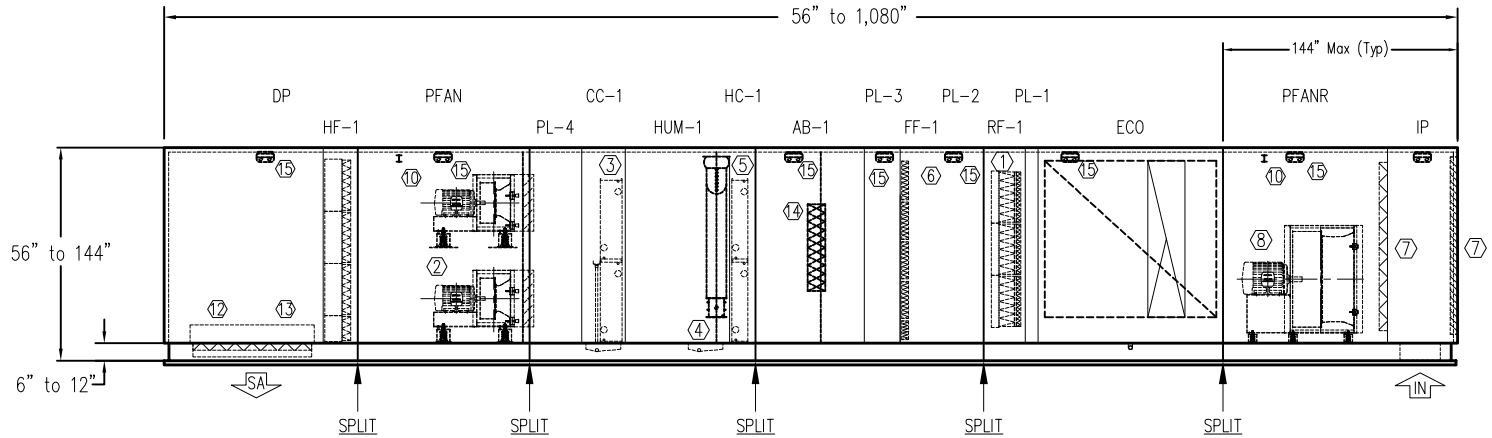

ELEVATION VIEW

See Appendix - Component List

1. Rigid Filter
2. Multiple Fans (Plenum)
3. Cooling Coil
4. Humidifier
5. Heating Coil
6. Flat Filter
7. Control Damper
8. Fan (Plenum)
9. Access Door
10. Motor Removal Rail
11. Louver
12. ULL Damper
13. Smoke Damper
14. Air Blender
15. Fluorescent Light
16. VFD, Motor Control
17. Single Point Power Panel

Unit Construction Information:

1. Wall and Roof Panel Thickness: 2", 3", 4".
2. Wall and Roof Panel Options: Standard, Thermal Break, Ultra Thermal Break.
3. Exterior Materials: Galvanized Steel, Stainless Steel, Pre-painted Galvanized Steel, Aluminum Texture.
4. Exterior Thickness: 20ga, 18ga, 16ga, 0.04".
5. Interior Materials: Galvanized Steel, Stainless Steel, Pre-painted Galvanized Steel, Aluminum Smooth.
6. Interior Thickness: 22ga, 20ga, 18ga, 16ga, 0.05"
7. Interior Options: Solid, Perforated.
8. Insulation Types: Fiberglass, Foam, Fiberglass and Foam Combination, Mineral Wool.
9. Floor Panel Materials: Painted Steel Tread Plate, Painted Steel (smooth), Stainless Steel Tread Plate, Aluminum Tread Plate, Galvanized Steel, Stainless Steel (304L and 316L).
10. Floor Thickness: 18ga, 16ga, 14ga, 12ga, 10ga, 0.10", 0.125".

DIMENSIONAL TOLERANCES - UNIT: ±0.5 / PIPING: ±2
UNIT COMPONENTS ARE SHOWN FOR REPRESENTATIONAL PURPOSES ONLY

FILE NAME:

REV.	DATE	BY	DESCRIPTION

YORK Custom AHU

FOR Single Wide Unit with Vestibule Seismic Certification

Johnson Controls

DRAWN BY	JOB NUMBER:
KMS	OSHPD UNIT C
DATE 02/17/12	SHEET 1 OF 1

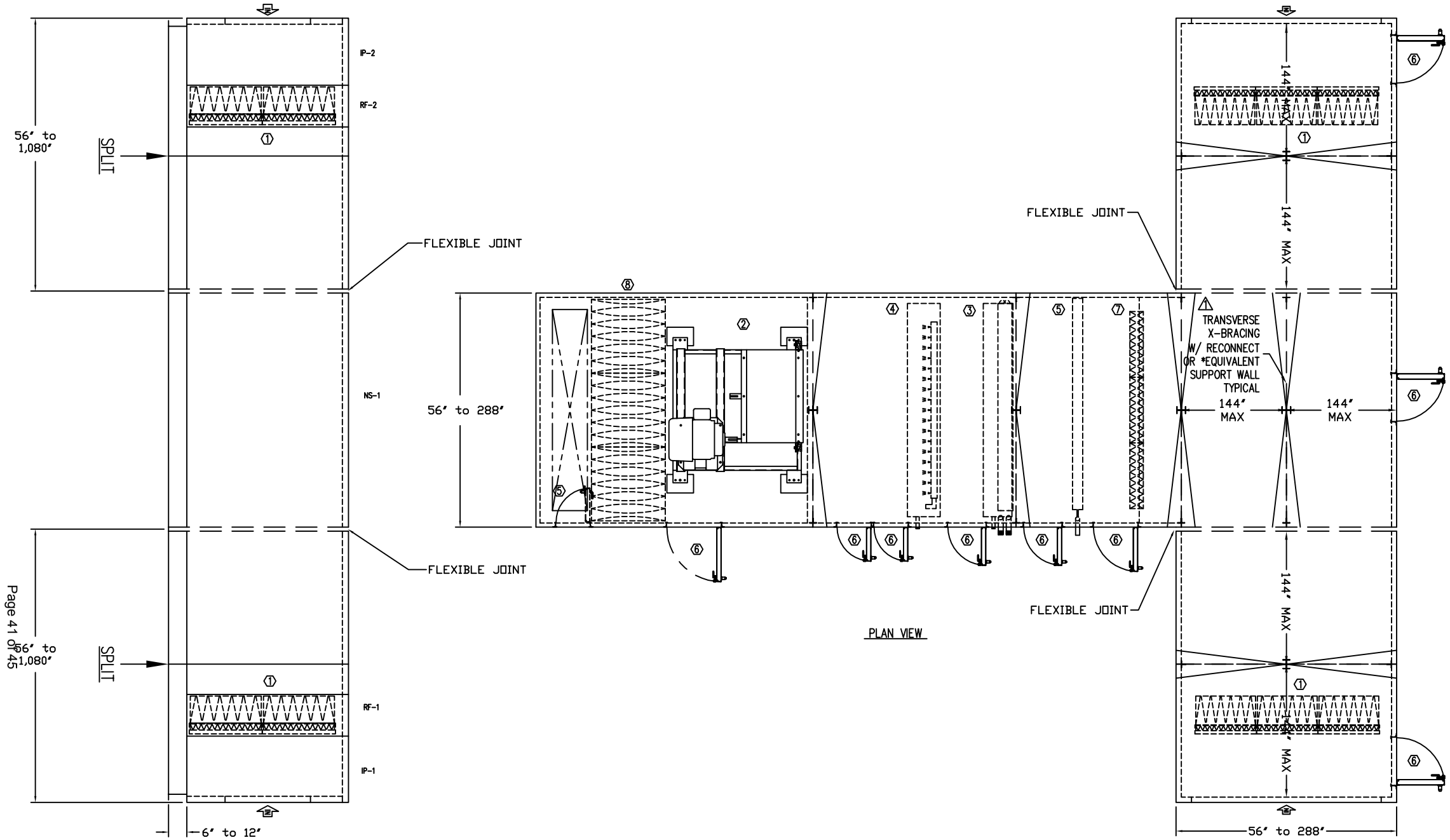

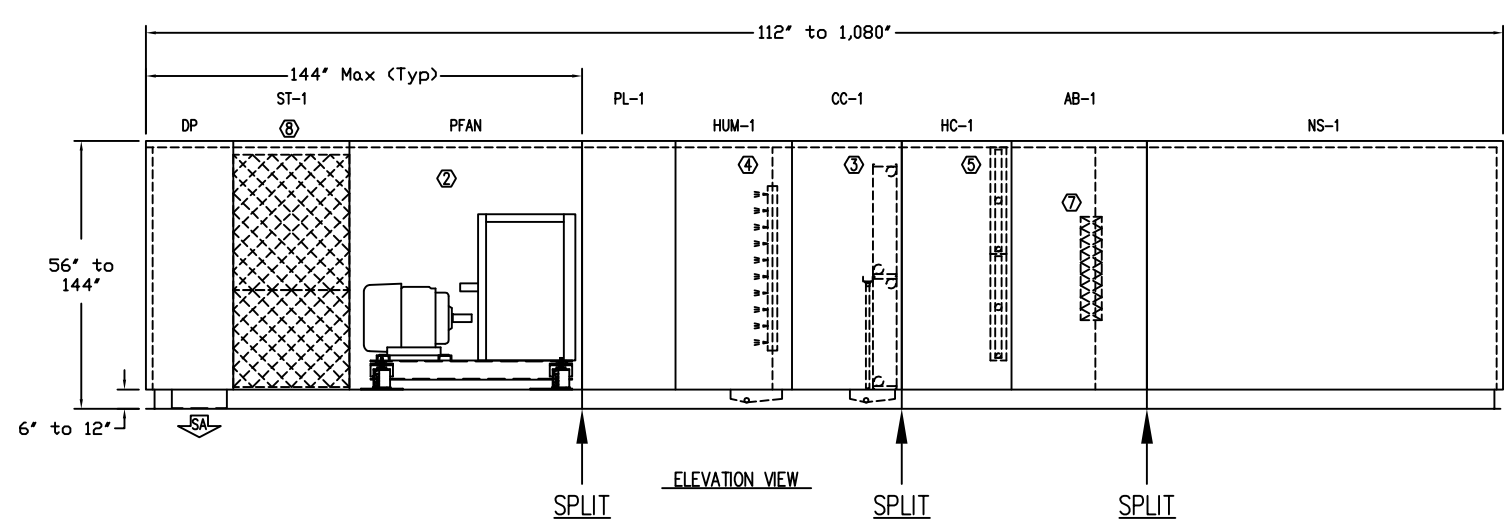

Unit Construction Information:

1. Wall and Roof Panel Thickness: 2", 3", 4".
2. Wall and Roof Panel Options: Standard, Thermal Break, Ultra Thermal Break.
3. Exterior Materials: Galvanized Steel, Stainless Steel, Pre-painted Galvanized Steel, Aluminum Texture.
4. Exterior Thickness: 20ga, 18ga, 16ga, 0.04".
5. Interior Materials: Galvanized Steel, Stainless Steel, Pre-painted Galvanized Steel, Aluminum Smooth.
6. Interior Thickness: 22ga, 20ga, 18ga, 16ga, 0.05"
7. Interior Options: Solid, Perforated.
8. Insulation Types: Fiberglass, Foam, Fiberglass and Foam Combination, Mineral Wool.
9. Floor Panel Materials: Painted Steel Tread Plate, Painted Steel (smooth), Stainless Steel Tread Plate, Aluminum Tread Plate, Galvanized Steel, Stainless Steel (304L and 316L).
10. Floor Thickness: 18ga, 16ga, 14ga, 12ga, 10ga, 0.10", 0.125".

See Appendix - Component List

1. Bag Filter
2. Fan (Plenum)
3. Cooling Coil
4. Humidifier
5. Heating Coil
6. Access Door
7. Air Blender
8. Sound Attenuator

SECTION LIST - FRONT	
SECT #	DESCRIPTION
NS-1	NON-STANDARD
AB-1	AIR BLENDER
HC-1	HEATING COIL
CC-1	COOLING COIL
HUM-1	HUMIDIFIER
PL-1	PLENUM
PFAN	SUPPLY FAN
ST-1	SOUND ATTENUATOR
DP	DISCHARGE PLENUM
IP-1	INLET PLENUM
RF-1	RIGID FILTER
PL-1	PLENUM
RF-2	RIGID FILTER
IP-2	INLET PLENUM

REFER TO X-BRACING W/ RECONNECT, RECONNECT, OR EQUIVALENT SUPPORT WALL DRAWING

DIMENSIONAL TOLERANCES - UNIT: ±0.5 / PIPING: ±2
UNIT COMPONENTS ARE SHOWN FOR REPRESENTATIONAL PURPOSES ONLY

FILE NAME:

REV.	DATE	BY	DESCRIPTION

YORK Custom AHU

FOR T Shaped Unit Seismic Certification

Johnson Controls

DRAWN BY	JOB NUMBER:
KMS	OSHPD UNIT G
DATE 4/02/2012	SHEET 1 OF 1

LEVEL	ITEM	PART NO. *=Stocked	TOTAL QTY.	SORT FIELD	DESCRIPTION	SHEET/REF.	QTY. ONE
	176		1	RECONNECT ASSY	RECONNECT ASSY 137.50 X 131.00	8.02	1
	182	091 20002 002	4	BRACE	BRACE,SHIPPING,12GA G90		4
	179		1	C:RECON-BOT	2.82W X 137.68L X SHEET,GLV,G90,12GA		1
	178		1	C:RECON-LFT	3.32W X 130.75L X SHEET,GLV,G90,12GA		1
	177		1	C:RECON-RGT	3.32W X 130.75L X SHEET,GLV,G90,12GA		1
	181		1	C:RECON-STF	3.64W X 130.75L X SHEET,GLV,G90,12GA		1
	180		1	C:RECON-TOP	3.82W X 137.68L X SHEET,GLV,G90,12GA		1
	365		4	CORNER BRACE	12.00 X 12.00 X SHEET,GLV,G90,12GA		4
	185	* 021 30404 003	49	NUT	NUT,FLANGED_LOCK,PLTD,.25-20		49
	183	* 021 30530 002	62	SCREW	SCREW,TEK,PLTD,10-16_1.0		62
	184	* 021 30470 002	34	SCREW	SCREW,HC,GR5,PLTD,.25-20_.75		34

1. RECONNECTS TO BE ATTACHED TO ROOF,/WALLS/FLOOR WITH TEK SCREWS (10-16 X 0.75) MAX SPACING 6.5"".

2. CORNER BRACES TO BE CONTINUOUSLY WELDED.

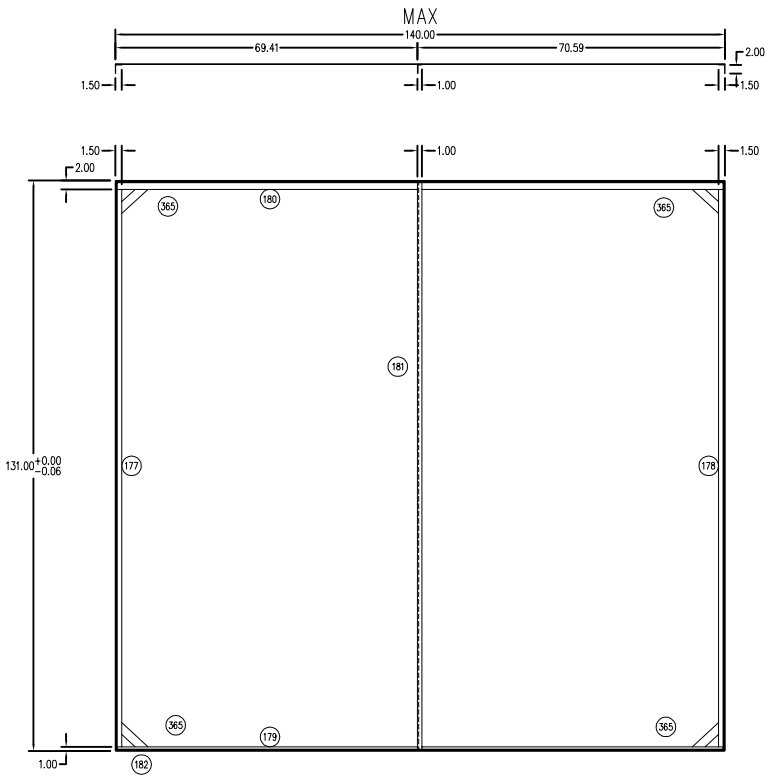

RECONNECT ASSEMBLY DETAIL

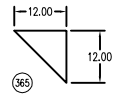

CORNER BRACE DETAIL

FILE NAME: Transverse Reconnect Details Narrow.dwg				DRAWN BY: HJ DUBENSKY	ISSUED ON: 02/21/12	TITLE: JCI-YORK CUSTOM AHU Unit W < or = 144", Transverse Reconnect Assy
REV.	DATE	BY	DESCRIPTION	PRODUCT TYPE: YC	CHECKED BY:	
				THIS DRAWING IS PROPERTY OF JOHNSON CONTROLS INC. AND CANNOT BE REPRODUCED NOR DELIVERED TO OTHERS WITHOUT EXPRESS WRITTEN PERMISSION FROM JOHNSON CONTROLS INC.	Johnson Controls	JOB NO.: OSHPD SEISMIC
						DRAWING NO.:
						SIZE: BB SHEET 1 OF: 2

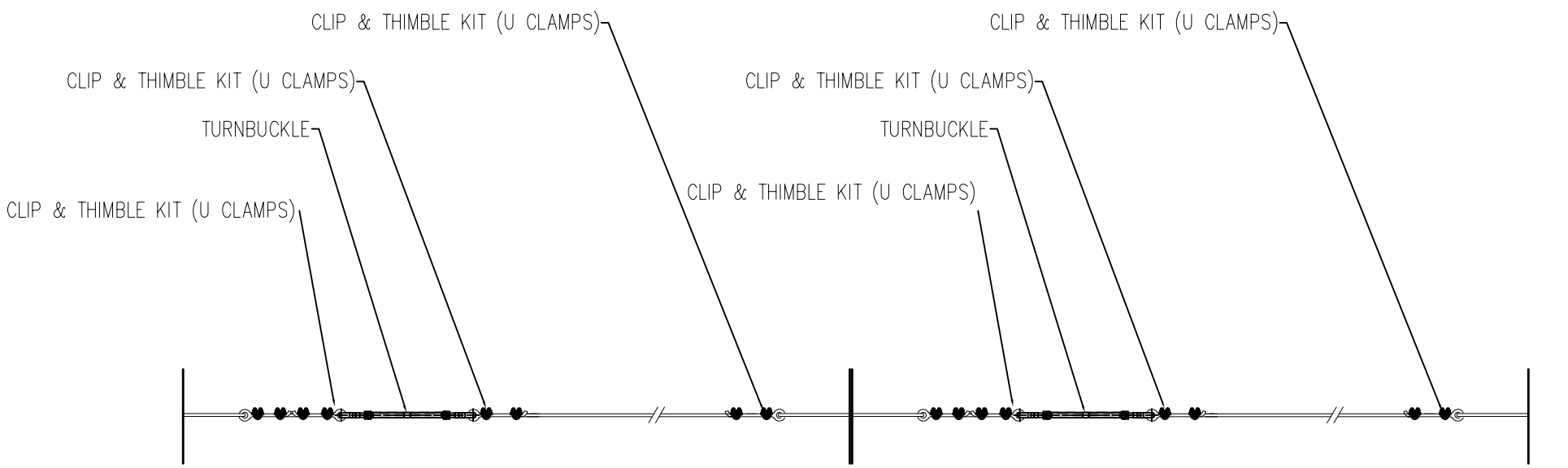

LEVEL	ITEM	*=Stocked PART NO.	TOTAL QTY.	SORT FIELD	DESCRIPTION	SHEET/REF.	QTY. ONE
	81		2	RECONNECT ASSY	RECONNECT ASSY 144.00 X 130.00	8.02	1
	84		4	C:RECON-BOT	2.82W X 72.00L X SHEET,GLV,G90,12GA		2
	90		4	C:RECON-LFT-C	5.14W X 129.75L X SHEET,GLV,G90,12GA		2
	89		4	C:RECON-RGT-C	5.14W X 129.75L X SHEET,GLV,G90,12GA		2
	85		4	C:RECON-TOP-L	3.32W X 72.00L X SHEET,GLV,G90,12GA		2
	91		1	C:SC1.25X1.88	4.01W X 129.75L X SHEET,GLV,G90,12GA		1
	155		8	CORNER BRACE	13.64 X 13.64 X SHEET,GLV,G90,12GA		4
	88	* 021 30404 003	32	NUT	NUT,FLANGED_LOCK,PLTD,.25-20		16
	87	* 021 30470 002	32	SCREW	SCREW,HC,GR5,PLTD,.25-20_.75		16

1. (4) DIAGONAL BRACING REQUIRED USING 3/8" (6x19 Class IWRC or EQUIVALENT STRENGTH) WIRE ROPE, 1/2" TURN BUCKLE, 3/8" U CLAMPS (QTY: 2 CLAMPS EACH JOINT), 3/8" ROPE TURN BACK CLIPS.

2. RECONNECTS TO BE ATTACHED TO ROOF,/WALLS/FLOOR WITH TEK SCREWS (10-16 X 0.75) MAX SPACING 6.5". CORNER GUSSET TO BE CONTINUOUSLY WELDED.

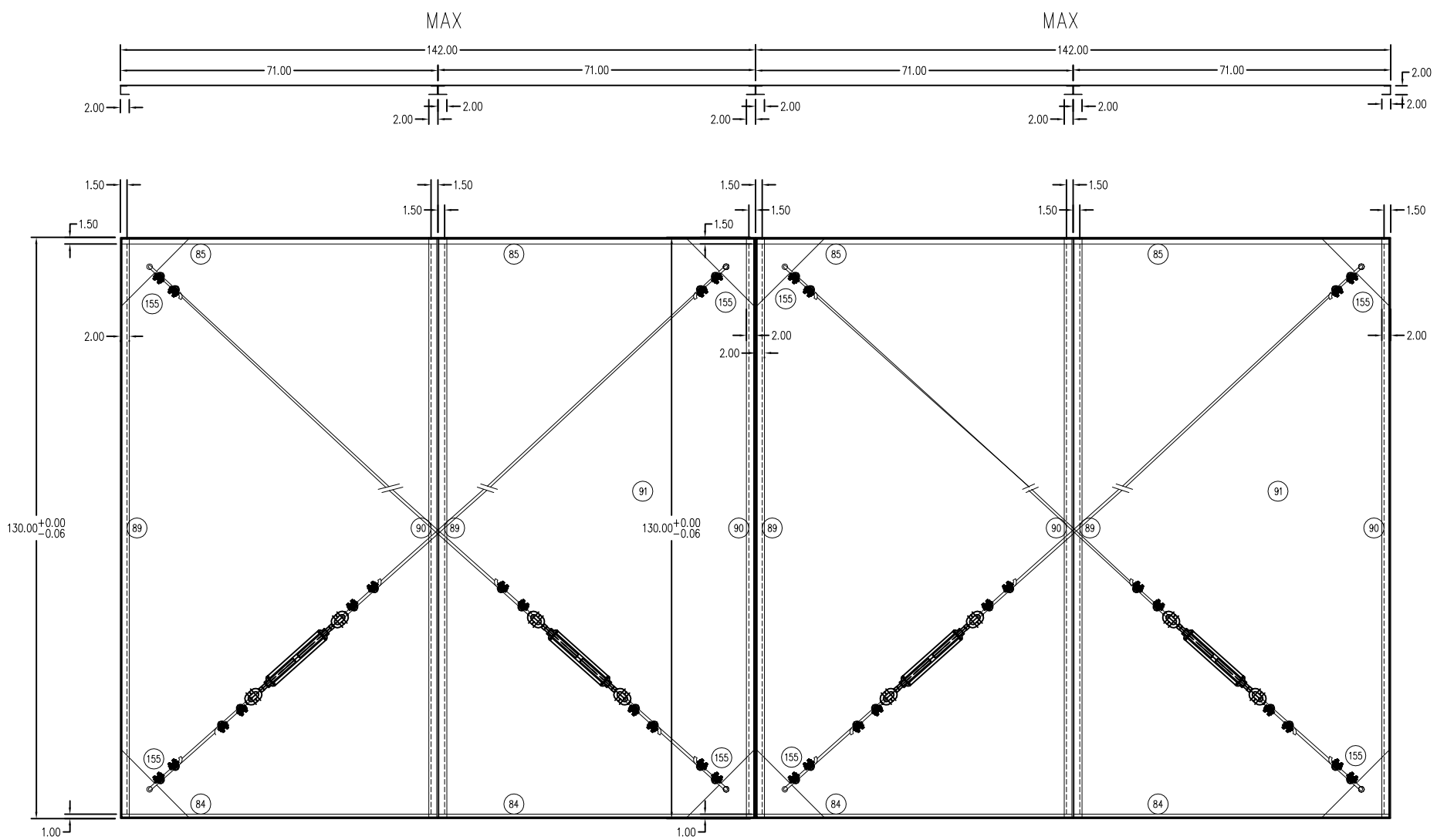

RECONNECT ASSEMBLY WITH X-BRACING DETAIL

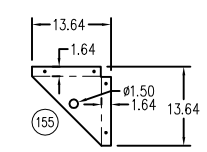

CORNER BRACE DETAIL

FILE NAME: Transverse X Bracing Details Wide.dwg				DRAWN BY:	ISSUED ON:	TITLE:
REV.	DATE	BY	DESCRIPTION	HJ DUBENSKY	02/08/12	JCI-YORK CUSTOM AHUs Unit W > 144", Transverse X-Bracing Detail with Reconnect Assy
				PRODUCT TYPE: YC	CHECKED BY:	

THIS DRAWING IS PROPERTY OF JOHNSON CONTROLS INC. AND CANNOT BE REPRODUCED NOR DELIVERED TO OTHERS WITHOUT EXPRESS WRITTEN PERMISSION FROM JOHNSON CONTROLS INC.

Johnson Controls

JOB NO.: OSHPD SEISMIC

DRAWING NO.:

SIZE: BB SHEET 1 OF: 2

1. (4) DIAGONAL BRACING REQUIRED USING 3/8" (6x19 Class IWRC or EQUIVALENT STRENGTH) WIRE ROPE, 1/2" TURN BUCKLE, 3/8" U CLAMPS (QTY: 2 CLAMPS EACH JOINT), 3/8" ROPE TURN BACK CLIPS.

2. RECONNECTS TO BE ATTACHED TO ROOF,/WALLS/FLOOR WITH TEK SCREWS (10-16 X 0.75) MAX SPACING 6.5". CORNER GUSSET TO BE CONTINUOUSLY WELDED.

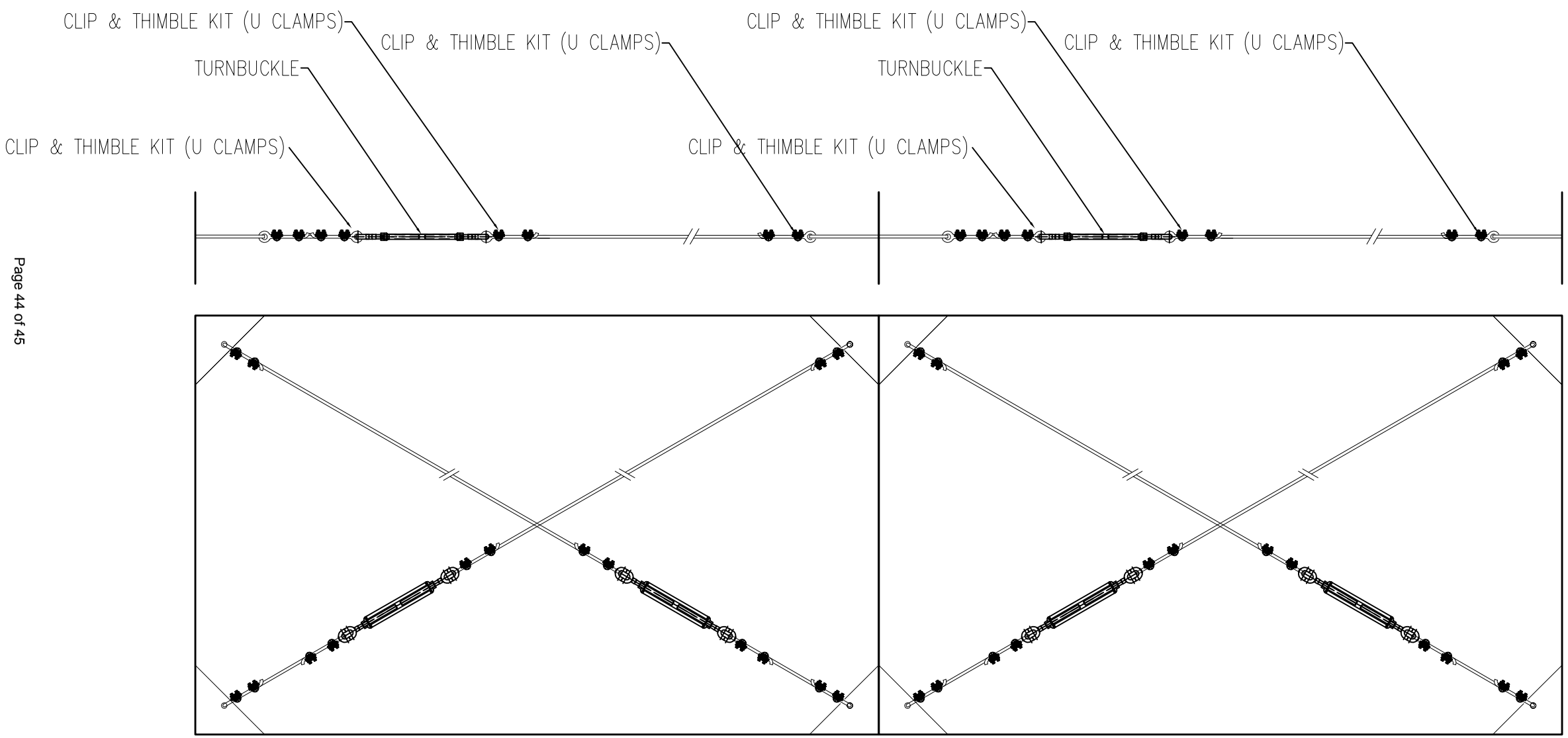

X-BRACING DETAIL

FILE NAME: Transverse X Bracing Details Wide.dwg				DRAWN BY: HJ DUBENSKY	ISSUED ON: 02/07/12	TITLE: JCI-YORK CUSTOM AHUs Unit W > 144", Transverse X-Bracing Detail
REV.	DATE	BY	DESCRIPTION	PRODUCT TYPE: YC	CHECKED BY:	
				THIS DRAWING IS PROPERTY OF JOHNSON CONTROLS INC. AND CANNOT BE REPRODUCED NOR DELIVERED TO OTHERS WITHOUT EXPRESS WRITTEN PERMISSION FROM JOHNSON CONTROLS INC.	Johnson Controls	JOB NO.: OSHPD SEISMIC
						DRAWING NO.:
						SIZE: BB SHEET 2 OF: 2

See Appendix - Component List

1. HEPA Filter
2. Multiple Fans (Plenum)
3. Cooling Coil
4. Heating Coil
5. Access Door
6. Air Blender
7. Humidifier
8. Vapor Proof Light
9. Sound Attenuator
10. Control Damper
11. Motor Removal Rail
12. Flat Filter
13. UV Lights

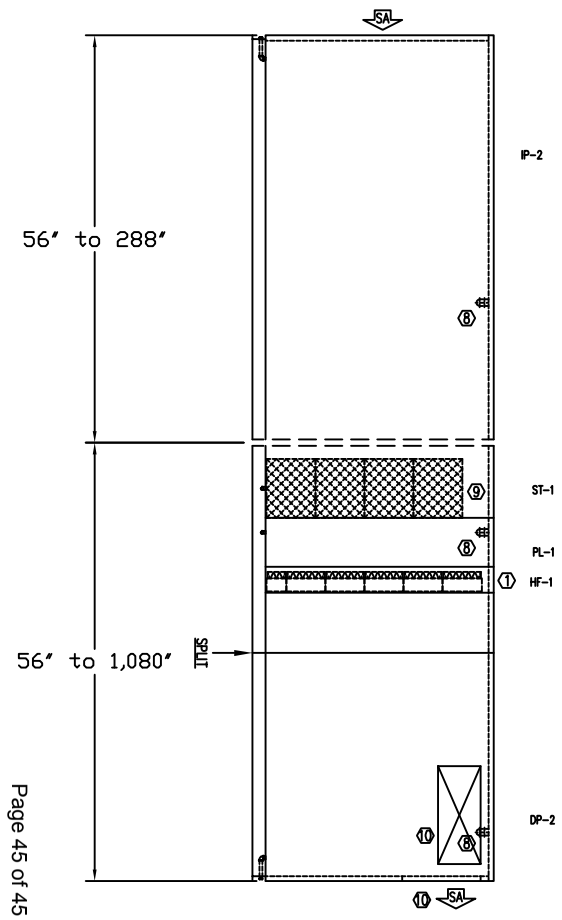

SIDE ELEVATION VIEW

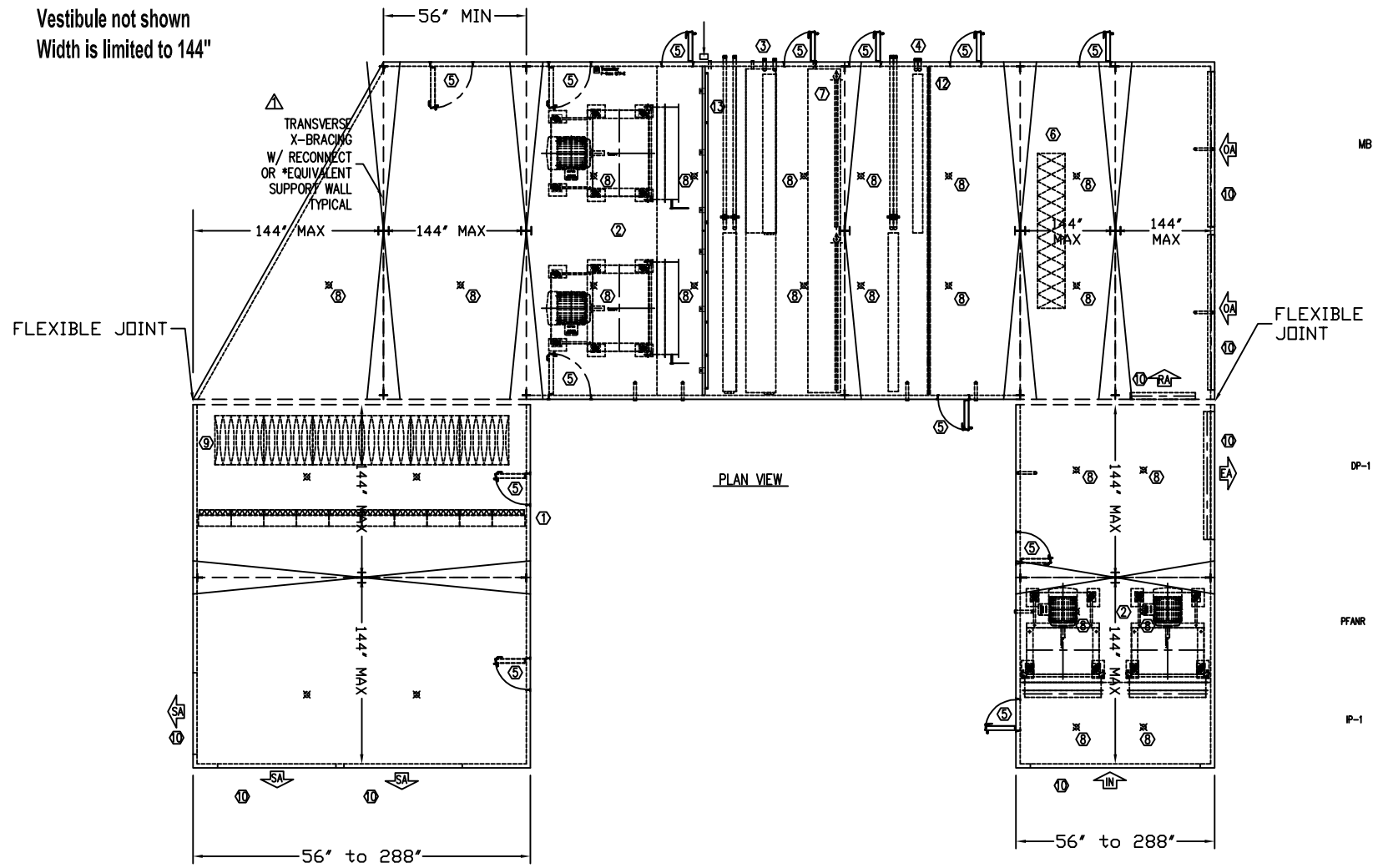

PLAN VIEW

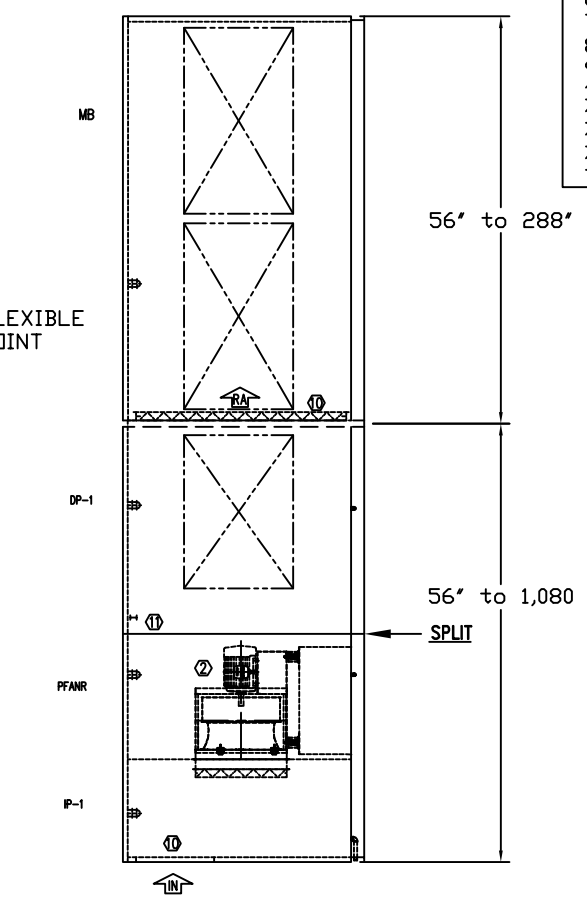

SIDE ELEVATION VIEW

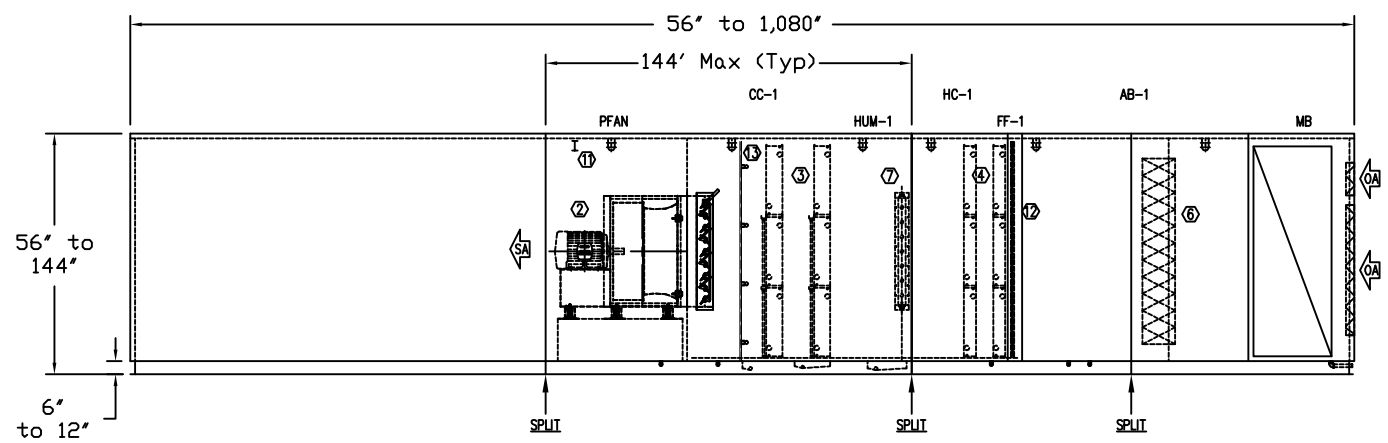

ELEVATION VIEW

REFER TO X-BRACING W/ RECONNECT, RECONNECT, OR EQUIVALENT SUPPORT WALL DRAWING

Unit Construction Information:

1. Wall and Roof Panel Thickness: 2", 3", 4".
2. Wall and Roof Panel Options: Standard, Thermal Break, Ultra Thermal Break.
3. Exterior Materials: Galvanized Steel, Stainless Steel, Pre-painted Galvanized Steel, Aluminum Texture.
4. Exterior Thickness: 20ga, 18ga, 16ga, 0.04".
5. Interior Materials: Galvanized Steel, Stainless Steel, Pre-painted Galvanized Steel, Aluminum Smooth.
6. Interior Thickness: 22ga, 20ga, 18ga, 16ga, 0.05"
7. Interior Options: Solid, Perforated.
8. Insulation Types: Fiberglass, Foam, Fiberglass and Foam Combination, Mineral Wool.
9. Floor Panel Materials: Painted Steel Tread Plate, Painted Steel (smooth), Stainless Steel Tread Plate, Aluminum Tread Plate, Galvanized Steel, Stainless Steel (304L and 316L).
10. Floor Thickness: 18ga, 16ga, 14ga, 12ga, 10ga, 0.10", 0.125".

SECTION LIST	
SECT #	DESCRIPTION
MB	MIXING BOX
AB-1	AIR BLENDER
FF-1	FLAT FILTER
HC-1	HEATING COIL
HUM-1	HUMIDIFIER
CC-1	COOLING COIL
PFAN	SUPPLY FAN
IP-1	INLET PLENUM
PFANR	RETURN FAN
DP-1	DISCHARGE PLENUM
IP-2	INLET PLENUM
ST-1	SOUND ATTENUATOR
PL-1	PLENUM
HF-1	HEPA FILTER
DP-2	DISCHARGE PLENUM

DIMENSIONAL TOLERANCES – UNIT: ±0.5 / PIPING: ±2
UNIT COMPONENTS ARE SHOWN FOR REPRESENTATIONAL PURPOSES ONLY

FILE NAME:

REV.	DATE	BY	DESCRIPTION

YORK Custom AHU

FOR

U SHAPED UNIT
Seismic Certification

Johnson Controls

DRAWN BY	JOB NUMBER:
KMS	OSHPD UNIT H
DATE 4/03/2012	SHEET 1 OF 1