Hospital Building Safety Board

2014 Annual Report to the California Seismic Safety Commission

Hospital Building Safety Board
400 R Street, Room 200
Sacramento, California 95811
(916) 440-8453 *and*
(916) 440-8446
Fax (916) 324-9118
www.oshpd.ca.gov/fdd/hbsb

HBSB STAFF

Linda Janssen
Executive Director
(916) 440-8443
ljanssen@oshpd.ca.gov

Cathy Kane
HBSB Staff Support
(916) 440-8446
hbsb@oshpd.ca.gov

Evett Torres
HBSB Staff Support
(916) 440-8453
hbsb@oshpd.ca.gov

2014 HBSB Annual Report to the Seismic Safety Commission

Table of Contents i
Introduction v
Composition of the Board v
Active Committees for 2014 vi
Appeals vii
Hospital Building Safety Board Membership Rosters for 2014 viii
Committee Roster xiii
Consulting Member Roster xv

Full Board Meetings

Full Board Meeting, March 12, 2014

Agenda – March 12, 2014 1
Meeting Report: November 20 & 21, 2013 Full Board – Presentation 5
Education & Outreach Committee – Summary 25
Administrative Processes & Code Changes Committee – Summary 33
Standard Details Committee – Summary 45
Advanced Technology Committee – Summary 53
FDD Update – Presentation 59
SB 499 Update – Presentation 117
Regulations Update – Presentation 141
Meeting Report: March 12, 2014 Full Board – FINAL 157

Full Board Meeting, November 19 & 20, 2014

Agenda – November 19 & 20, 2014 177
Meeting Report: March 12, 2014 Full Board – Presentation 181
Education & Outreach Committee – Summary 197
Standard Details Committee – Summary 209
Administrative Processes & Code Changes Committee – Summary 217
Instrumentation Committee – Summary 231
Zero Energy Building – Presentation 243
South Napa, CA Earthquake – Presentation 267
Acute Care Hospitals and Skilled Nursing Facilities via Google Maps 343
FDD Update – Presentation 351
Assessment of Lath & Plaster Metal-Stud Partition – Presentation 405
SB 499 Update – Presentation 489
OSHPD Proposed Code Changes for the 2016 CA Mechanical & Plumbing Codes – Presentation 509
Meeting Report: November 19 &20, 2014 Full Board – DRAFT 519

Committee Meetings

Administrative Processes and Code Changes Committee

January 30, 2014

Agenda – January 30, 2014 549
Committee Goals for 2014 551
Handwashing Fixtures – Presentation 553
"Materially Alter" Code Application Notice – Presentation 559
Meeting Report: January 30, 2014 – FINAL 567

June 26, 2014

Agenda – June 26, 2014 581
"Approved Testing Agency" Code Application Notice – Presentation 583
"Reporting Form for Inspector of Record Performance Evaluation" Standard Operating Procedure – Presentation 599
DRAFT SB 90 Financial Capacity Report – Presentation 609
DRAFT Financial Capacity Report Requirements for SB 90 – Presentation 621
Meeting Report: June 26, 2014 – FINAL 625

September 23, 2014

Agenda – September 23, 2014 639
ASHRAE Standard 170 Update – Presentation 647
OSHPD Amendments Proposed for the 2016 California Building Code – Presentation 653
OSHPD Proposed Code Changes for the 2016 California Mechanical and Plumbing Codes – Presentation 703
2016 California Building Standards Code Adoption 713
Meeting Report: September 23, 2014 – FINAL 773

Advanced Technology Committee

March 6, 2014

Agenda – March 6, 2014 787
Meeting Report: March 5, 2014 – FINAL 789

November 17, 2014

Agenda – November 17, 2014 803
"The Roadmap to Sustainability and Savings" – Presentation 805
Meeting Report: November 17, 2014 – DRAFT 817

Board Procedures Committee

December 9, 2014

Agenda – December 9, 2014 829
HBSB Policies and Procedures 831
Meeting Report: December 8, 2014 – DRAFT 845

Committee Meetings (Cont'd)

Education & Outreach Committee

January 16, 2014

Agenda – January 16, 2014 855
Committee Goals for 2014 857
Meeting Report: January 16, 2014 – FINAL 859

May 1, 2014

Agenda – May 1, 2014 867
"California Hospital Projects from A to Z – Tips from the Experts" Seminar, May 30, 2014 – Flyer, Registration Form & Schedule of Events 869
"All You Need to Know" Seminar Dates and Locations – Presentation 873
Meeting Report: May 1, 2014 -- FINAL 877

June 18, 2014

Agenda – June 18, 2014 887
"California Hospital Projects from A to Z – Tips from the Experts", May 30, 2014: Feedback – Presentation 889
"All You Need to Know" Seminar: Venues – Presentation 897
Meeting Report: June 18, 2014 – FINAL 903

August 13, 2014

Agenda – August 13, 2014 915
"Hot Topics!" The Seminar – Handout and Event Schedules 917
"Functional Program" – Presentation 919
Meeting Report: August 13, 2014 – FINAL 923

September 10, 2014

Agenda – September 10, 2014 933
"Hot Topics!" The Seminar: Session 1 – Presentation 935
"Hot Topics!" The Seminar: Session 2 – Presentation 991
"Hot Topics!" The Seminar: Session 4 – Presentation 1073
Meeting Report: September 10, 2014 – FINAL 1143

Instrumentation Committee

October 29, 2014

Agenda – October 29, 2014 1155
"California Strong Motion Instrumentation Program (CSMIP)" – Presentation 1159
OSHPD/CSMIP Hospital Instrumentation by the CA Strong Motion Instrumentation Program – Annual Report: 2013 / 2014 1171
Candidate Hospital Buildings for Instrumentation 1201
Map of Hospitals Instrumented by CSMIP/OSHPD 1203
Meeting Report: October 29, 2014 – FINAL 1205

Committee Meetings (Cont'd)

Standard Details Committee

February 19, 2014

Agenda – February 19, 2014 1219
2013 CBC Standard Gypsum Board Ceiling Details for Suspended and Joist Framing Construction – Approved 1221
Lamb Oxford Comments: 2013 CBC Standard Suspended Ceiling Details (DRAFT) 1291
2013 CBC Fire-Resistive Standard Details – DRAFT 1351
Meeting Report: February 19, 2014 – FINAL 1413

May 15, 2014

Agenda – May 15, 2014 1421
2013 CBC Fire-Resistive Standard Details – DRAFT 1423
Meeting Report: May 15, 2014 – FINAL 1479

Introduction

The Hospital Building Safety Board (HBSB, or "Board") was established by Senate Bill 519 (Alquist) in the original Hospital Facilities Seismic Safety Act of 1973. The Board is a citizen advisory board with members who are recognized experts in health facility design, engineering, and construction. The Board's purpose is to advise the Director of the Office of Statewide Health Planning and Development (OSHPD) on the administration of the Hospital Facilities Seismic Safety Act, and act as a board of appeals with regard to seismic safety, and fire and life safety issues relating to hospital facilities.

Composition of the Board

The Director of OSHPD appoints sixteen Board members from nominations submitted by professional associations, as specified in the Health and Safety Code, and has the authority to appoint three more as public ex-officio members. Appointed Board members serve 4-year terms with a maximum of two terms. Six statutory ex-officio members, representing state agencies whose programs interface with the hospital design and construction program, also sit on the Board.

This report contains the agendas, meeting reports, handouts and presentations, and decisions of the Hospital Building Safety Board for 2014. To view the entire report, please see the HBSB website: http://oshpd.ca.gov/Boards/HBSB/.

Additional Board-related information can be found on OSHPD's website:
http://www.oshpd.ca.gov/Boards/HBSB/index.html.

Linda L. Janssen, Executive Director
Hospital Building Safety Board
400 R Street, Suite 200
Sacramento, CA 95811
(916) 440-8453
HBSB@oshpd.ca.gov

Active Committees for 2014

Administrative Processes and Code Changes Committee
Mr. Scott Karpinen, Chairperson

The Administrative Processes and Code Change Committee makes recommendations to OSHPD regarding the various plan review processes that the Facilities Development Division (FDD) offers to California's hospital industry. The committee also reviews and makes recommendations for all proposed and emergency regulations prior to OSHPD's submission to the California Seismic Safety Commission. In addition, the committee assists FDD in developing Policy Intent Notices and Code Application Notices.

This committee met three times in 2014.

Board Procedures Committee
Mr. D. Michael Foulkes, Chairperson

The primary objective of the Board Procedures Committee is to work with the Board Chairperson, Executive Director, and OSHPD to address Board policies, procedures, and bylaws, and to work on issues that improve the efficiency and cohesiveness of the Board.

This committee met once in 2014.

Education and Outreach Committee
Mr. Arlee Monson, Chairperson

The Education and Outreach Committee disseminates information about educational and training events offered by other organizations, and updates various publications of interest to California's hospital industry, such as the "Guide for Working on Projects under OSHPD Jurisdiction—Tips from the Experts" and the "FREER Manual—a Guide for Field Reviewed Projects, Projects Exempt from OSHPD Plan Review and OSHPD Permit (Excluded) & Expedited Review Projects." The committee plans and conducts seminars, and makes recommendations about possible training opportunities to be offered by OSHPD staff. In addition, the committee explores various methods of disseminating information such as posting recordings of presentations and training sessions on OSHPD's website.

This committee met five times in 2014.

Active Committees for 2014 (Cont'd)

Instrumentation Committee
Mr. Lou Gilpin, Chairperson

The Instrumentation Committee reviews the status of existing strong motion instruments in hospital facilities. The committee annually reviews and prioritizes newly proposed candidate hospital buildings for strong motion instrumentation.

This committee met once in 2014.

Standard Details Committee
Mr. Bert Hurlbut, Chairperson

The Standard Details Committee develops and submits to OSHPD standard details for use by California's hospital industry design professionals. These standard details address issues such as wall framing and suspended ceilings. The committee will continue to develop standard details for mechanical, electrical, plumbing, fire and life safety, and accessibility.

This committee met twice in 2014.

Technology Committee
Mr. Eric Johnson, Chairperson

The Technology Committee (originally named "Advanced Technology Committee") is the Board's newest Committee and is tasked with keeping OSHPD abreast of new technologies being developed for hospitals to help ensure that current code and regulations do not prevent the use of technological developments in health care. The committee is developing a three-part workshop and enlisting hospital IT and clinical engineering representatives, along with industry vendors to educate and spark interest for the technologies being developed for the healthcare/hospital construction industries and the effects they could potentially have on hospital systems.

This committee met twice in 2014.

Appeals

There were no formal appeals submitted to the Board during the 2014 calendar year.

Hospital Building Safety Board Membership Roster for 2014

MEMBERSHIP CATEGORIES	NAMES	TERM EXPIRATION DATE	TERM OF SERVICE
Appointed Members (Appointed by OSHPD Director)			
2 structural engineers	Simin Naaseh Rami Elhassan	2/2016 8/2017	2nd term 1st term
2 architects	Richard R. Tannahill Bruce Macpherson	11/2018 8/2017	1st term 1st term
1 engineering geologist	Lou Gilpin	10/2015	1st term
1 geotechnical engineer	John A. Egan	4/2015	2nd term
1 mechanical engineer	Scott Karpinen	3/2017	2nd term
1 electrical engineer	Eric C. Johnson	5/2018	2nd term
1 hospital facilities manager	Carl Scheuerman	11/2018	2nd term
1 local building official	Y. Henry Huang	5/2016	1st term
1 general contractor	Bert Hurlbut	11/2014	2nd term
1 fire/life safety representative	John Donelan	5/2018	2nd term
1 hospital inspector of record	Brian Spindler	2/2016	2nd term
3 public members	Enid K. Eck Poki Namkung Patrick M. Sullivan	10/2015 5/2015 11/2018	1st term 2nd term 1st term
TOTAL	16		
Ex-Officio Members			
OSHPD, Director	Robert P. David	No Term of Office Stipulated	
State Fire Marshal	Tonya Hoover Ernie Paez (Delegate)		
State Geologist	John Parrish Tim McCrink (Delegate) Jennifer Thornburg (Delegate)		
Building Standards Commission, Executive Director	Jim McGowan Michael Nearman (Delegate)		
Department of Public Health, Director	Ron Chapman, M.D., MPH Eric Morikawa (Delegate)		
Facilities Development (OSHPD), Deputy Director	Paul A. Coleman		
TOTAL	6		
Director Appointed Ex-Officio Members (Serve at pleasure of Director)			
3 members	D. Michael Foulkes Trailer Martin Michael O'Connor	No Term of Office Stipulated	
TOTAL	3		
TOTAL HBSB Members	**25**		

Hospital Building Safety Board Appointed Members

John A. Egan, G.E. AMEC Geomatrix, Inc. 2101 Webster Street, 12th Floor Oakland, CA 94612 **(510) 663-4292** john.egan@amec.com Geotechnical Engineer, ***HBSB Chair*** Original Appt. – 04/07; Term Expires -04/2015	**Arlee Monson, AIA** Principal, SmithGroup, Inc. 301 Battery Street, 7th Floor San Francisco, CA 94111 **(415) 227-0100** arlee.monson@smithgroup.com Architect, ***HBSB Vice-Chair*** Original Appt. - 05/10; Term Expires – 05/2014
Robert E. Chason 618 Francisco Place Davis, CA 95616 **(530) 848-3024 (cell)** rchason@sbcglobal.net Public Member Original Appt. - 11/13; Term Expires – 11/2017	**John Donelan** 35175 San Carlos Street Yucaipa, CA 92399 **(909) 795.5262** (909) 260.8945 (cell) cowdogfire@aol.com Fire and Life Safety Representative Original Appt. - 05/10; Term Expires – 05/2018
Enid K. Eck, RN, MPH Kaiser Permanente Quality and Risk Management 393 E. Walnut Street Pasadena, CA 91188 **(626) 405-6051** enid.k.eck@kp.org Public Member Original Appt. – 10/11; Term Expires – 10/2015	**Rami M. Elhassan, Ph.D., SE Principal** IDS Group 1 Peters Canyon Road, Suite 130 Irvine, CA 92606 **(949) 387-8500** Rami.Elhassan@idsgi.com Structural Engineer Original Appt. - 08/13; Term Expires – 08/2017
Lou Gilpin, Ph.D., CEG Principal Geologist, Gilpin Geosciences, Inc. 2038 Redwood Road Napa, California 94558 **(707) 251-8543** lgilpin@gilpingeosciences.com Engineering Geologist Original Appt. – 10/11; Term Expires – 10/2015	**Y. Henry Huang, PE., CBO** 7552 Los Trancos La Palma, CA 90623 **(714) 431-4123** (562) 544-1110 cell y.henry.huang@gmail.com Local Building Official Representative Original Appt. – 5/12; Term Expires – 5/2016

HBSB Appointed Members (Cont'd)

Bert Hurlbut Stanford University Medical Center 1520 Page Mill Road, 2nd Floor Palo Alto, CA 94304 **(650) 380-6858 (cell)** bhurlbut@stanfordmed.org General Contractor Original Appt. – 11/06; Term Expires – 11/2014	**Eric C. Johnson, PE** President, ECOM Engineering, Inc. 1796 Tribute Road, Suite 100 Sacramento, CA 95815 **(916) 641-5600** ecj@ecomeng.com Electrical Engineer Original Appt. - 05/10; Term Expires – 05/2018
Scott Karpinen, ME Frank M. Booth Design Build Company 4220 Douglas Blvd., Suite 5 Granite Bay, CA 95746 **(916) 878-3827** scottk@fmbdbc.com Mechanical Engineer Original Appt.– 03/13;Term Expires– 03/2017	**Bruce Macpherson** Puchlik Design Associates, Inc. 859 South Raymond Avenue Pasadena, CA 91105-3223 **(626) 304-9215** BMacpherson@puchlikdesign.com Architect Original Appt. - 08/13; Term Expires – 08/2017
Simin Naaseh, SE President & CEO Forell/Elsesser Engineers, Inc. 160 Pine St., 6th Floor San Francisco, CA 94111 **(415) 837-0700** simin@forell.com Structural Engineer Original Appt.- 04/08; Term Expires 03/2016	**Poki Namkung, M.D.** 2840 Webster Street Berkeley, CA 94705 **(510) 363-6802** pnamkung1@yahoo.com Public Member Original Appt. - 05/07; Term Expires – 05/2015
Carl Scheuerman, FACHE Director, Regulatory Affairs Sutter Health Facility Planning & Development 2880 Gateway Oaks Drive, Suite 220 Sacramento, CA 95833 **(916) 566-4821** (916) 425-0787 (cell) scheuec@sutterhealth.org Hospital Facilities Representative Original Appt. – 11/10; Term Expires – 11/2018	**Brian Spindler, IOR** UC Davis Medical Center 1524 Quailrun Road Placerville, CA 95667 **(916) 734-5022** luannquailrunroad@hotmail.com Inspector of Record Original Appt.- 02/08; Term Expires 02/2016

Director-Appointed Ex-Officio Members

D. Michael Foulkes, Manager State and Local Government Affairs Apple 1 Infinite Loop, MS 81-2CF Cupertino, CA 95014 **(408) 974-2503**, *fax: (408) 974-5870* foulkes@apple.com	**John A. Martin, Jr., SE** John A. Martin & Associates, Inc. 950 South Grand, 4th Floor Los Angeles, CA 90015 **(213) 483-6490** *fax: (213) 748-0288* trailer@johnmartin.com
Michael O'Connor, Principal Nichols, Melburg, & Rossetto 300 Knollcrest Drive Redding, CA 96002 **(530) 222-3300**, *fax: (530) 222-3538* michael.oconnor@nmrdesign.com	

Ex-Officio Members

Robert P. David, Director OSHPD 400 R Street, Suite 310 Sacramento, CA 95811 **(916) 326-3600** robert.david@oshpd.ca.gov	Assistant to Mr. David – Michelle Lehn OSHPD 400 R Street, Suite 310 Sacramento, CA 95811 **(916) 326-3602** Michelle.lehn@oshpd.ca.gov
Tonya Hoover, State Fire Marshal Office of State Fire Marshal P.O. Box 944246 Sacramento, CA 94244-2460 **(916) 445-8200** tonya.hoover@fire.ca.gov	Delegate: **Ernie Paez, Chief** Fire & Life Safety Division-South Office of State Fire Marshal 602 E. Huntington Dr., Suite A Monrovia, CA 91016 **(626) 305-1908 Ext. 203** ernie.paez@fire.ca.gov

Ex-Officio Members (Cont'd)

John Parrish, State Geologist California Geological Survey 801 K Street, MS 12-30 Sacramento, CA 95814-3531 **(916) 445-1923** john.parrish@conservation.ca.gov	Delegate: **Tim McCrink, Supervising Geologist** California Geological Survey 801 K Street, MS 12-32 Sacramento, CA 95814-3531 Delegate: **Jennifer Thornburg** California Geological Survey 801 K Street, MS 12-32 Sacramento, CA 95814-3531 **(916) 445-5488** jennifer.thornburg@conservation.ca.gov
Jim McGowan, Executive Director California Building Standards Commission 2525 Natomas Park Drive, Suite 130 Sacramento, CA 95833-2936 **(916) 263-0916** jim.mcgowan@dgs.ca.gov	Delegate: **Michael Nearman, Deputy Executive Director** California Building Standards Commission 2525 Natomas Park Drive, Suite 130 Sacramento, CA 95833-2936 **(916) 263-0916** michael.nearman@dgs.ca.gov
Ron Chapman, MD, MPH, Director California Department of Public Health 1615 Capitol Ave, Suite 73.720 Sacramento, CA 95814 **(916) 558-1700** ron.chapman@cdph.ca.gov	Delegate: **Dan Kotyk, Chief** Emergency Preparedness and Disaster Response Licensing and Certification Program California Department of Public Health 1615 Capitol Ave. P.O. Box 997377, MS 3205 Sacramento, CA 95814 **(916) 324-0134** dan.kotyk@cdph.ca.gov
Paul A. Coleman, Deputy Director OSHPD-Facilities Development Division 400 R Street, Suite 200 Sacramento, CA 95811 **(916) 440-8381** paul.coleman@oshpd.ca.gov	Assistant to Mr. Coleman - Kerri Blunt OSHPD-Facilities Development Division 400 R Street, Suite 200 Sacramento, CA 95811 **(916) 440-8381** kerrilee.blunt@oshpd.ca.gov

2014 Hospital Building Safety Board Committee Roster

ADMINISTRATIVE PROCESSES AND CODE CHANGES COMMITTEE

Board Members:
Scott Karpinen, Chair
John Donelan, Vice-Chair
Enid Eck
Rami Elhassan
Henry Huang
Bruce Macpherson
Carl Scheuerman

Consulting Member(s)
Michael Gritters

OSHPD Representative(s):
Gary Dunger
Glenn Gall
Ramin Sadr

Tentative Meeting Date(s):
~~May 7~~ **CANCELED**
June 26
December 9

ADVANCED TECHNOLOGY COMMITTEE

Board Members:
Eric Johnson, Chair
Michael Foulkes, Vice-Chair
Enid Eck
Bert Hurlbut
Bruce Macpherson
Arlee Monson
Poki Namkung
Carl Scheuerman

Consulting Member(s):
Joe La Brie

OSHPD Representative(s):
Hussain Bhatia
Gary Dunger
Glenn Gall
Diana Scaturro

Tentative Meeting Date(s):
March 6
~~April 9~~ **CANCELED**
November 17

BOARD PROCEDURES COMMITTEE

Board Members:
Michael Foulkes, Chair
Trailer Martin, Vice-Chair
John Egan
Arlee Monson
Carl Scheuerman

OSHPD Representative(s):
None

Tentative Meeting Date(s):
~~April 10~~ **CANCELED**
~~April 25~~ **CANCELED**
December 9

EDUCATION AND OUTREACH COMMITTEE

Board Members:
Arlee Monson, Chair
Eric Johnson, Vice-Chair
John Donelan
Lou Gilpin
Bert Hurlbut
Scott Karpinen

Consulting Member(s):
Joe La Brie

OSHPD Representative(s):
Gary Dunger
Lorin Never

Tentative Meeting Date(s):
January 16
~~April 3~~ **CANCELED**
May 1
June 18
August 13
September 10

2014 HBSB Committee Roster (Cont'd)

INSTRUMENTATION COMMITTEE

Board Members:
Lou Gilpin, Chair
John Egan, Vice-Chair
Rami Elhassan
Trailer Martin
Simin Naaseh
Brian Spindler

Consulting Member(s):
Moh Huang
Donald Jephcott
Tony Shakal

OSHPD Representative(s):
Roy Lobo
Chris Tokas

Tentative Meeting Date(s):
October 29

STANDARD DETAILS COMMITTEE

Board Members:
Bert Hurlbut, Chair
Michael O'Connor, Vice-Chair
Rami Elhassan
Henry Huang
Eric Johnson
Scott Karpinen
Bruce Macpherson
Arlee Monson

Consulting Member(s):
Mark Hershberg
Kale Wisnia

OSHPD Representative(s):
Brett Beekman
Roy Lobo

Tentative Meeting Date(s):
February 19
May 15
~~August 21~~ **CANCELED**
~~August 27~~ **CANCELED**
~~November 12~~ **CANCELED**

STRUCTURAL AND NON-STRUCTURAL REGULATIONS COMMITTEE

Board Members:
Henry Huang, Chair
Scott Karpinen, Vice-Chair
John Donelan
John Egan
Rami Elhassan
Trailer martin
Simin Naaseh
Michael O'Connor

OSHPD Representative(s):
Roy Lobo

Tentative Meeting Date(s):
~~January 29~~ **CANCELED**

2014 Consulting Committee Member Roster

Michael Gritters Vice President, Operations Healthcare Services McCarthy Building Companies, Inc. 20401 S.W. Birch Street, Suite 300 Newport Beach, CA 92660 (949) 500-1888 mgritters@mccarthy.com • Administrative Processes and Code Changes Committee	**Moh Huang** California Geological Survey 801 K Street, MS 13-35 Sacramento, CA 95814 (916) 322-9304 FAX: (916) 323-7778 moh.huang@consrvation.ca.gov • Instrumentation Committee
Donald K. Jephcott 19191 Harvard Avenue Irvine, CA 92612 (949) 737-5519 dkjephcott@juno.com • Instrumentation Committee	**Tony Shakal** California Geological Survey 801 K Street, Sacramento, CA 95814 (916) 322-7481 FAX: (916) 323-7778 tony.shakal@consrvation.ca.gov • Instrumentation Committee
Mark Hershberg, SE KPFF Consulting Engineers 6080 Center Drive, Suite 300 Los Angeles, California 90045 (310) 665-1536 mhershberg@kpff-la.com • Standard Details Committee	**Joe La Brie, SE** Makeitright, Inc. (626) 445-0366 labrie@makeitright.net • Education & Outreach Committee • Advanced Technology Committee

2014 HBSB

Full Board Meetings

Office of Statewide Health Planning and Development

Hospital Building Safety Board
400 R Street, Suite 200
Sacramento, California 95811-6213
(916) 440-8453
Fax (916) 324-9118
http://www.oshpd.ca.gov/Boards/HBSB/index.html

A public meeting of the **Hospital Building Safety Board** (HBSB) will be held on:

Wednesday, March 12, 2014
10:00 a.m. to 3:30 p.m.

At the

Tsakopoulos Library Galleria
828 I Street, East Room
Sacramento, CA 95814
(916) 264-2800

DIRECTIONS –

From the San Francisco Bay Area:

- Take **Interstate 80 East**;
- east of Davis, continue on **US-50/Business 80**;
- Take **Interstate 5 North Exit** toward Redding;
- Take **J Street** exit;
- Turn **right** onto **J Street**;
- Turn **left** onto **10th Street**;
- Turn **left** onto **I Street**;
- **828 I Street** is on the **left**.

From the Sacramento International Airport:

- Exit the airport south and take the ramp to **Interstate 5 South**;
- Take **J Street** exit;
- Turn **left** onto **10th Street**;
- Turn **left** onto **I Street;**
- **828 I Street** is on the **left**.

PARKING –

Standard Garage's vehicle entrance is in the alley off of J Street between 8th and 9th streets.

For assistance with lodging or travel arrangements, please contact the Board Staff at (916) 440-8453

AGENDA

Wednesday, March 12, 2014

10:00 a.m.—3:30 p.m.

NOTE: Agenda order is tentative and subject to change without prior notice.
A lunch of approximately 60 minutes will be taken sometime during the day.

1 Call to Order —John Egan, HBSB Chairperson

- Welcome and Introductions
- Announcements
- Review and approve the draft November 20 and 21, 2013 Meeting Report
- Discussion and Public Input

2 OSHPD Update —Robert P. David, OSHPD Director

- OSHPD Update
- Discussion and Public Input

3 Board Procedures Committee — Michael Foulkes, Committee Chair

- Overview and approval of Meeting Report
  - December 18, 2013
- Discussion and Public Input

4 Education and Outreach — Arlee Monson, Committee Chair

- Overview and approval of Meeting Report
  - January 16, 2014
- Discussion and Public Input

5 Administrative Processes & Code Changes Committee
— Scott Karpinen, Committee Chair

- Overview and approval of Meeting Report
  - January 30,' 2014
- Discussion and Public Input

6 Standard Details Committee — Bert Hurlbut, Committee Chair

- Overview and approval of Meeting Reports
  - February 19, 2014
- Discussion and Public Input

7 **Advanced Technology Committee** — Eric Johnson, Committee Chair

- Overview of Committee's First Meeting
  - March 6, 2014
- Committee Goals for 2014
- Meeting Schedule for 2014
- Discussion and Public Input

8 **Facilities Development Division Update** — Paul Coleman, FDD Deputy Director

- Discussion and Public Input

9 **SB 90 and SB 499 Update**—Roy Lobo, FDD Structural Services Section

- Discussion and Public Input

10 **Regulations Update** — Glenn Gall, FDD Building Standards Unit

- Discussion and Public Input

11 **Meeting Wrap Up** —John Egan, HBSB Chairperson

12 **Information Items**

- HBSB Membership
- HBSB Roster
- HBSB Consulting Members Roster
- HBSB Committee List
- HBSB Meeting Attendance Record

REMINDER: Please call (916) 440-8453 on Tuesday, March 11th after 3:00 p.m. to confirm that the meeting will take place as scheduled. The recording will verify the meeting date and location.

NOTE: Meeting facilities and restrooms are accessible to the physically disabled. If any special accommodations (assistive listening device, sign language interpreter, etc.) are needed, please contact the Board Staff at (916) 440-8453. Requests should be made as soon as possible but no later than 10 business days prior to the meeting.

This page left intentionally blank.

FULL HBSB QUARTERLY MEETING

March 12, 2014
Sacramento, California

John Egan – Chair
Arlee Monson – Vice Chair

1

Meeting Date: November 20 & 21, 2013; Burbank

OVERVIEW OF TOPICS

Board Members Present

John Egan, Chair
Robert Chason
Enid Eck
Michael Foulkes
Bert Hurlbut
Bruce Macpherson
Simin Naaseh
Carl Scheuerman
Arlee Monson, Vice-Chair
John Donelan
Rami Elhassan
Henry Huang
Scott Karpinen
Trailer Martin
Poki Namkung

OSHPD Staff

Bob David. OSHPD Director
Paul Coleman, FDD Deputy Director
Hussain Bhatia
John Gillengerten
Roy Lobo
Elizabeth Wied
Glenn Gall
Muhammad Karim
Chris Tokas

HBSB Staff

Linda Janssen, HBSB Executive Director
Cathy Kane, HBSB Staff

2

Meeting Date: November 20 & 21, 2013; Burbank

OVERVIEW OF TOPICS

Strategic Planning Session – Board Members Present

- Overview of the Committee Process
  - Committees are where the lion's share of the Board's work is accomplished
  - Committee Chairs – appointed by Board Chair; responsibilities are outlined in Board Policies & Procedures
  - Roles and responsibilities of Committee Vice Chairperson, Committee Members, & Consulting Members

3

Meeting Date: November 20 & 21, 2013; Burbank

OVERVIEW OF TOPICS

Strategic Planning Session – Board Members Present

- 2014 Committee's Goal Setting
  - Several Committees (Instrumentation, Board procedures, SB 90, SB 499) have relatively constant year to year goals, so would not be preparing new goals
  - Structural/Non-Structural Committee (Henry Huang)
  - Administrative Processes and Code Changes Committee (Scott Karpinen)
  - Education and Outreach Committee (Arlee Monson)
  - Standard Details Committee (Burt Hurlbut)

4

Meeting Date: November 20 & 21, 2013; Burbank

OVERVIEW OF TOPICS

Strategic Planning Session – Board Members Present

- General Discussion
  - The role of legislation in healthcare
  - Consideration of New Committees for 2014
    - ✓ Inspector of Record (IOR) – currently sunset
    - ✓ Seismic Compliance – still absence of need
    - ✓ Burgeoning Technologies – created as *Advanced Technology Committee*

➢ Meeting Recess for day

5

Meeting Date: November 20 & 21, 2013; Burbank

OVERVIEW OF TOPICS

- Report of August 28, 2013, HBSB quarterly meeting was approved as corrected by unanimous vote.

Review of Draft 2014 Committee Goals – Chairs

- Structural/Non-Structural Committee (Henry Huang)
- Administrative Processes and Code Changes Committee (Scott Karpinen)
- Education and Outreach Committee (Arlee Monson)
- Standard Details Committee (Burt Hurlbut)

6

Meeting Date: November 20 & 21, 2013; Burbank

OVERVIEW OF TOPICS

Review of Draft 2014 Board Goals – Chair

- Helping OSHPD evaluate the SB 499 results
- Continuing to develop Standard Details
- Building on the Education and Outreach Committee successes
- Brainstorming as a collective group, not just individual committees, on achieving goals….cross-pollination of ideas
- Building and strengthening relationships with each other, personally, as well as professionally

❖ Committee and Full Board goals for 2014, as presented, were approved by unanimous vote.

7

Meeting Date: November 20 & 21, 2013; Burbank

OVERVIEW OF TOPICS

OSHPD Update – Mr. Bob David

- HBSB swearing-in ceremony - new member Robert Chason
- Everyone involved in healthcare is planning and reacting to the Affordable Care Act implementation
- Covered California is much further along than many other states
- Healthcare workforce bills did not reach consesus; expects Legislature to take these up again in January
- SB 563 – OSHPD cost recovery for documents...signed
- SB 239 – extends hospital fee through 2016...passed; CHA has filed a ballot initiative to extend it indefinitely
- SB 615 – extension of prevailing wage law…vetoed

8

Meeting Date: November 20 & 21, 2013; Burbank

OVERVIEW OF TOPICS

Special Presentation by Mr. Carl McLaney
OSHPD's Cal-Mortgage Loan Insurance Division

- Loan insurance program for healthcare facilities, including hospitals

Special Presentation by Mr. Henry Huang
HBSB member representing Local Building Officials

- Jurisdictional roles and responsibilities of local building departments

9

Meeting Date: November 20 & 21, 2013; Burbank

OVERVIEW OF TOPICS

Education and Outreach Committee – Mr. Arlee Monson

- Main focus of the committee for most of 2013 was development and preparation of the seminar (*"California Hospital Projects from A to Z—Tips from the Experts"*) on the content of the Guide for working with OSHPD on projects under their jurisdiction
- The seminar/workshop was be presented in the fall at locations in both southern and northern California; a sufficiently large waitlist of interested participants may result in another showing
- Reiterated 2014 Committee goals

10

Meeting Date: November 20 & 21, 2013; Burbank

OVERVIEW OF TOPICS

Instrumentation Committee – Ms. Simin Naaseh

- Report of Committee meeting on October 29, 2013
- Reviewed standing Committee goals
  - ✓Review status of existing instrumentation in hospitals
  - ✓Review and prioritize list of candidate hospitals for instrumentation
- There have been a large number of owner funded installations during the past year
- Illustration of past fiscal year's projects under the OSHPD/CSMIP hospital instrumentation program
- The OSHPD/owner/CSMIP MOU developed by OSHPD has resulted in improved efficiency of the instrumentation process

11

Meeting Date: November 20 & 21, 2013; Burbank

OVERVIEW OF TOPICS

Standard Details Committee – Mr. Burt Hurlbut

- **Ceiling Details** – next steps are to complete the standard drywall ceiling details and bring the acoustical ceiling details up to 2013 code
- **Fire/Life Safety Details** – next step is to push forward these details
- **MEP Details** – next steps are to complete currently in development
- Use of all the standard details is voluntary and it is the responsibility of the design engineer who chooses to use the detail in a project, even to it is pre-approved by OSHPD, to make sure it is appropriate for use on the particular project

12

Meeting Date: November 20 & 21, 2013; Burbank

OVERVIEW OF TOPICS

Structural/Non-Structural Committee – Mr. Henry Huang

- **Report of October 23, 2013, meeting**
  - ✓Approved motion to direct staff to move forward developing design options for non-acute care buildings
  - ✓Approved motion to accept PIN presented by Dr. Karim on OSHPD pre-approval program
- **Presentation by Mr. John Gillengerten** – proposed code change pertaining to design requirements for general acute care hospitals, acute psychiatric hospitals, multi-story SNFs, and single-story non-light-frame SNFs. Based on differences of operational needs, inpatient populations, and post-EQ functionality. Allows for less restrictive non-structural requirements, as appropriate. Statutory performance objectives still met.

13

Meeting Date: November 20 & 21, 2013; Burbank

OVERVIEW OF TOPICS

Special Presentation by Mr. Scott Karpinen

HBSB member representing Mechanical Engineers

- Mechanical detailing and construction process – keys to project success or failure

14

Meeting Date: November 20 & 21, 2013; Burbank

OVERVIEW OF TOPICS

Facilities Development Division Update - Mr. Paul Coleman

- There has been a downward trend in workload over the past two years
- $$$ value of projects has been decreasing recently
- A very high percentage (≥ 95%) of plan reviews and post-approval documents are meeting established target goals
- Yearly average of days in review for OSHPD documents has decreased considerably over past five years, indicating improved efficiencies
- OTCs in the Sacramento and Los Angeles offices are three days per week
- Virtual OTC process is in development

15

Meeting Date: November 20 & 21, 2013; Burbank

OVERVIEW OF TOPICS

Facilities Development Division Update - continued

- Number of permits up since end of 2010; related to code change
- Upward trend of SB 1838 project during this timeframe
- The fee for a high percentage (≥ 85%) of SNFs and smaller acute care hospital projects (<$400,000) is not adequate to cover the work effort to process and carry out the project review; OSHPD is trying to reduce costs for these as many ways as possible
- CAC 7-128 pertaining to work performed without a permit will be in force as of January 1, 2014.
- FREER Manual has been updated
- Number of projects submitted via eSP has increased, allowing OSHPD to keep costs down

16

Meeting Date: November 20 & 21, 2013; Burbank

OVERVIEW OF TOPICS

Facilities Development Division Update – continued

- Report on Seismic Compliance by Mr. Hussain Bhatia
  - HAZUS
    - ✓Number of project currently in office is at all-time low (38)
    - ✓74 projects remarked on by OSHPD have not been returned
    - ✓96 projects remarked on by OSHPD that have shown no activity for more than 90 days are receiving letters
    - ✓Is a requirement for an SB 90 extension; without HAZUS results, extension cannot be processed
  - 80 facilities are still rated NPC-1…that's a problem
  - Facilities are receiving non-compliance letters from OSHPD
  - SB 499 reporting is still required of 160 facilities

17

Meeting Date: November 20 & 21, 2013; Burbank

OVERVIEW OF TOPICS

Facilities Development Division Update – continued

- Report on Seismic Compliance by Mr. Hussain Bhatia - continued
  - Demonstrated how OSHPD is using Google Earth mapping tools for tracking hospitals and associated projects located throughout the state; also discussed the potential value of the tools to help plan and prioritize emergency response following a significant natural event or other catastrophe

18

Meeting Date: November 20 & 21, 2013; Burbank

OVERVIEW OF TOPICS

Regulations Update - Mr. Glenn Gall (BSU)

- Major efforts by OSHPD in 2013 to align OSHPD 3 requirements for free-standing outpatient clinics with national standards, simplify them for local building jurisdictions and provide training for local building departments
- Proposed mechanical standards not accepted by BSC, due to challenge in court
- All 2013 codes are posted online by the BSC; thus free access
- BSU trying to achieve more consistency of reviews from office to office
- BSU provided training to field staff and in-house architects regarding new code requirements, although different focuses for these two groups
- BSU trying to gain consistency with Dietary Services projects
- List of updated PINS & CANS

19

Meeting Date: November 20 & 21, 2013; Burbank
CONCLUSION

- Questions, Comments, and Answers (?)

20

EDUCATION AND OUTREACH COMMITTEE

REPORT FOR MARCH 12, 2014

by
ARLEE MONSON - COMMITTEE CHAIR
ERIC JOHNSON - COMMITTEE VICE CHAIR

COMMITTEE MEMBERS:
BOB CHASON
JOHN DONELAN
JOHN EGAN
LOU GILPIN
BERT HURLBUT

JOE LA BRIE, CONSULTING MEMBER

PAUL COLEMAN - OSHPD
CHRIS TOKAS – OSHPD
LORIN NEYER – OSHPD
GARY DUNGER - OSHPD

COMMITTEE MEETING REPORT OF JANUARY 16, 2014

OVERVIEW OF TOPICS

- GOALS FOR YEAR 2014
- NEW WORKSHOP FOR THE "*TIPS FROM THE EXPERTS*"
- SEMINARS FOCUSED ON DESIGN/SUBMITTAL SUBJECTS
- WEBINARS FOR CODE UPDATES
- VIDEOS FOR TRAINING SESSIONS FOR DOWNLOADING
- SPC/NPC COMPLIANCE DEADLINES

- **ONE DAY WORKSHOP IN SACRAMENTO – May 30, 2014**

- **FOUR 90-MINUTE SESSIONS**
  - **1- INTRODUCTION TO OSHPD/FDD**
  - **2- GUIDELINES FOR HOSPITALS**
  - **3- WORKING WITH OSHPD/FDD IN THE FIELD**
  - **4- DESIGN AND OSHPD/FDD REVIEW**

COMMITTEE MEETING REPORT OF JANUARY 16, 2014

DISCUSSIONS

- SEMINAR ON "NON-MATERIALLY ALTER" – "STANDARD DETAILS" – "SPECIAL SEISMIC CERTIFICATION" TO TARGET A TIME IN MAY 2014 IN BAY AREA AND LOS ANGELES AREA WITH PARTICIPATION OF OUTSIDE DESIGN PROFESSIONALS

- UPDATES TO "GUIDE" FOR 2013 CBC REFERENCES OR CORRECTIONS TO BE HANDLED BY OSHPD STAFF. OTHER UPDATES TO SECTIONS TO BE DETERMINED AS NEEDED.

- SPC/NPC EXTENSION COMPLIANCE ISSUES ARE LIMITED TO CERTAIN HOSPITALS WHICH OSHPD CONTACTS DIRECTLY

COMMITTEE MEETING REPORT OF JANUARY 16, 2014

DISCUSSIONS

- WEBINARS ARE LIMITED TO 150 PARTICIPANTS WHEN PERFORMED BY OSHPD'S SERVICE. PARTNER WITH CA HOSPITAL ASSOCIATION WHO HAS UNLIMITED SERVICE

- RESTRICTIONS ALSO IMPACT DEVELOPMENT OF PODCASTS OR YOU-TUBE VIDEOS, BUT A 1-HOUR AUDIO SESSION CAN BE POSTED TO THE WEBSITE FOR DOWNLOADING. POWERPOINT PRESENTATIONS CAN ALSO BE POSTED FOR DOWNLOADING

- VIDEO DEVELOPMENT FOR eSERVICES PORTAL LIMITED BY THE LACK OF AN OSHPD VIDEO SERVER. POSSIBLE TO HAVE CHA OR OTHER ASSOCIATIONS HOST VIDEOS

COMMITTEE MEETING REPORT OF JANUARY 16, 2014

COMMITTEE AND PUBLIC COMMENTS

- LOOK AT MORE TRAINING FOR IOR ISSUES
- ACTIVELY SEEK OUT OPPORTUNITIES FROM OTHER COMMITTEES FOR EDUCATION AND PUBLIC OUTREACH
- NEXT MEETING IS SCHEDULES FOR APRIL 3rd

COMMITTEE MEETING REPORT OF JANUARY 16, 2014

CONCLUSION

- **QUESTIONS?**
- **This Report constitutes a MOTION to the BOARD and must be SECONDED by a Board Member that does not serve on the Committee**

This page left intentionally blank.

ADMINISTRATIVE PROCESSES AND CODE CHANGES COMMITTEE

March 12, 2014

by
Scott Karpinen, COMMITTEE CHAIR
John Donelan, COMMITTEE VICE CHAIR

COMMITTEE MEMBERS:
Bob Chason
Enid Eck
Rami Elhassan
Henry Huang
Bruce Macpherson
Carl Scheuerman

CONSULTING MEMBERS:
Mike Gritters

OSHPD STAFF:
Gary Dunger
Glenn Gall
Ramin Sadr
Eric Jacobsen

MEETING REPORT:

- Meeting Date: 1/30/2014

Meeting Date: 1/30/2014:
OVERVIEW OF TOPICS

- **Review of Goals for 2014**
  - Hospice Regulations
  - PINs and CANs
  - OSHPD Fee Structure
  - eSP Enhancements and Functionality
  - New Code Updates & Addendum Code Items
  - Materially Alter
  - OSHPD 3SE

Meeting Date: 1/30/2014:
OVERVIEW OF TOPICS

- **Report on Code Update Process**
  - General maintenance work on OSHPD 1 requirements in Section 1224.
  - OSHPD 2 – Skilled Nursing Facilities.
  - General maintenance work on OSHPD 4.
  - Revisions to Interventional Radiology and Hybrid O.R.'s.
  - Multiple Errata's and supplements for 2013 code.

Meeting Date: 1/30/2014:
OVERVIEW OF TOPICS

- **Handwashing Fixture Discussion**
  - Discussion about “deck mounted” controls.
  - Errata that was issued regarding fixtures.

Meeting Date: 1/30/2014:
OVERVIEW OF TOPICS

- **"Materially Alter" Discussion**
  - Decision to keep CAN "as is" and educate industry.

Meeting Date: 1/30/2014:
OVERVIEW OF TOPICS

Item not on Agenda

- Future speakers (ASHRAE, AIA), ASHRAE 170.

Meeting Date: 1/30/2014:
OVERVIEW OF MOTIONS

- **No Motions**

Meeting Date: 1/30/2014: CONCLUSION

- Questions and Answers
- This report constitutes a MOTION to the BOARD and must be SECONDED by a Board Member that does not serve on the Committee for further ACTION.

NEXT STEPS:

- Discussion on ASHRAE 170 requirements.
- Assist with Interventional Radiology & Hybrid Operating Rooms.
- Energy Efficiency Measures & Standards.

CONCLUSION / DISCUSSION / Q&A

This page left intentionally blank.

STANDARD DETAILS

March 12, 2014

by
Bert Hurlbut CHAIR
Michael O'Connor VICE CHAIR

COMMITTEE MEMBERS:
Rami Elhassan
Eric Johnson
Scott Karpinen
Bruce McPherson
Arlee Monson

Mark Hershberg CONSULTING MEMBER 1
Kale Wisnia CONSULTING MEMBER 2

Paul Coleman OSHPD
Brett Beekman OSHPD
Roy Lobo OSHPD
Chris Tokas OSHPD
Glenn Gall OSHPD

MEETING REPORTS: STANDARD DETAILS

- Meeting Date: February 19, 2014

Meeting Date: February 19, 2014
OVERVIEW OF TOPICS

- Review Standard Drywall Ceiling Approved Details
- Review Acoustical Ceiling Comments
- Review Proposed Life Safety Details

Meeting Date: February 19, 2014
OVERVIEW OF MOTIONS

- None

Meeting Date: February 19, 2014
CONCLUSION

- Questions and Answers
- This report constitutes a MOTION to the BOARD and must be SECONDED by a Board Member that does not serve on the Committee for further ACTION.

NEXT STEPS:

- Next Step 1: Complete review of Life Safety Details
- Next Step 2: Establish MEP details for consideration

CONCLUSION / DISCUSSION / Q&A

This page left intentionally blank.

Advanced Technology Committee

March 12, 2014

by
Eric Johnson, CHAIR
Michael Foulkes, VICE CHAIR

COMMITTEE MEMBERS:
Arlee Monson
Bob Chason
Enid Eck
Bert Hurlbut
Bruce Macpherson
Poki Namkung
Carl Scheuerman

OSHPD STAFF
Bill Gow
Gary Dunger
Diana Scaturro
Roy Lobo

MEETING REVIEW:

- Meeting Date: 03/06/2014

Meeting Date: 03/06/2014:
OVERVIEW OF TOPICS

- Poll vendors to see what new technologies might be developed and potentially used in hospital systems
- Request CISCO systems explain their redundancies on critical hospital systems
- Ensure current code and regulations do not prevent the use of emerging technology in hospital systems
- FDD staff share with the committee what they are seeing in electronic plan review
- Discuss the potential for Fire & Life Safety systems that utilize emerging technology
- Emerging technology for structural systems
- Assist FDD in determining how technology can be used to improve plan review processes
- Request “guest speakers” from hospital IT representatives
- Discussion and Public Input

Meeting Date: 03/06/2014: CONCLUSION

- Questions and Answers
- This report constitutes a MOTION to the BOARD and must be SECONDED by a Board Member that does not serve on the Committee for further ACTION.

NEXT STEPS:

- Industry input / presentations / Discovery phase
- Gather more information from healthcare providers
- Develop goals for the board.

CONCLUSION / DISCUSSION / Q&A

Facilities Development Division

California's Building Department for Hospitals

Paul A. Coleman, Architect, Deputy Director

Update for the Hospital Building Safety Board

March 12, 2014

A Summary of 2013 and Looking Forward to 2014 and Beyond

Workload in Construction Values 2012+

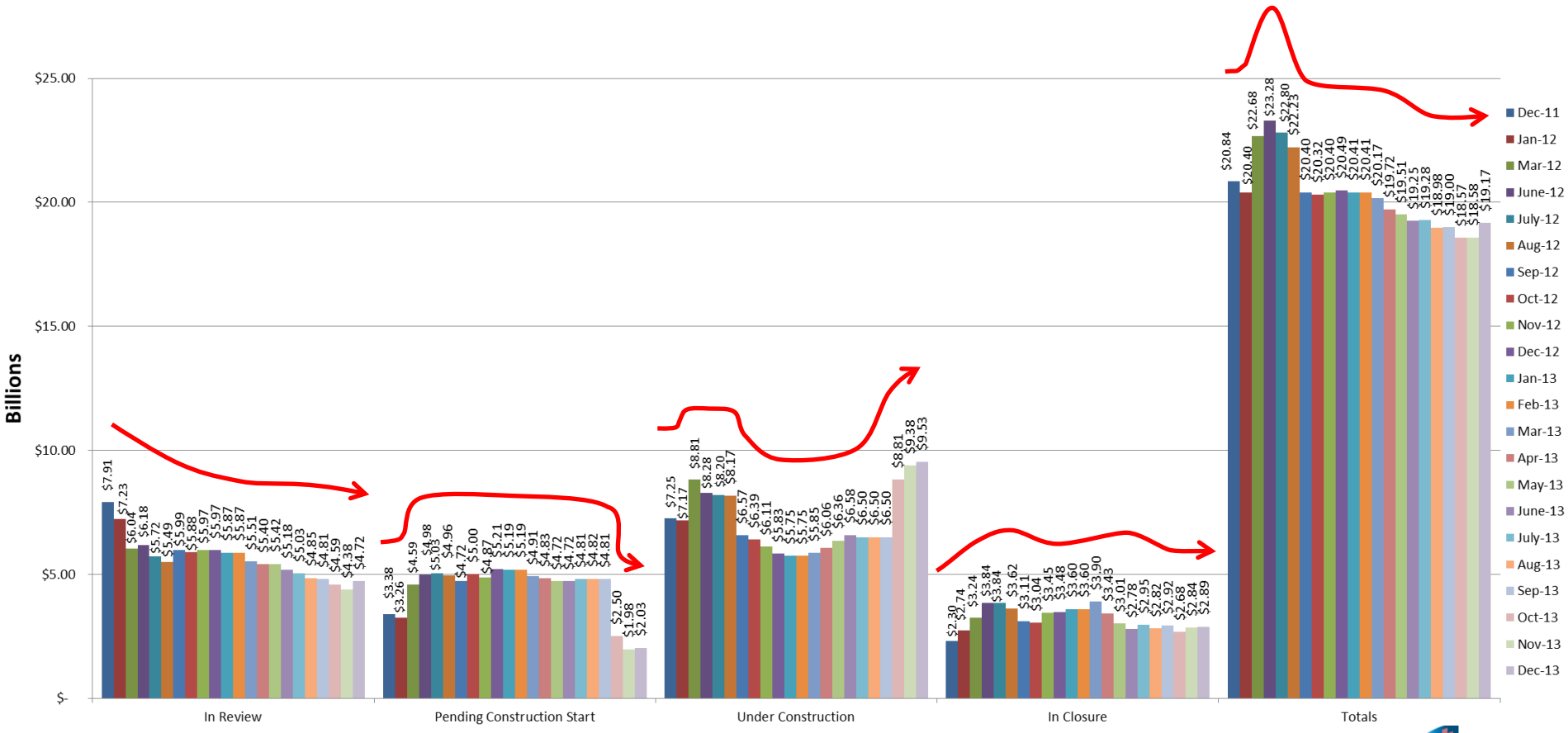

Total Construction Value in Review

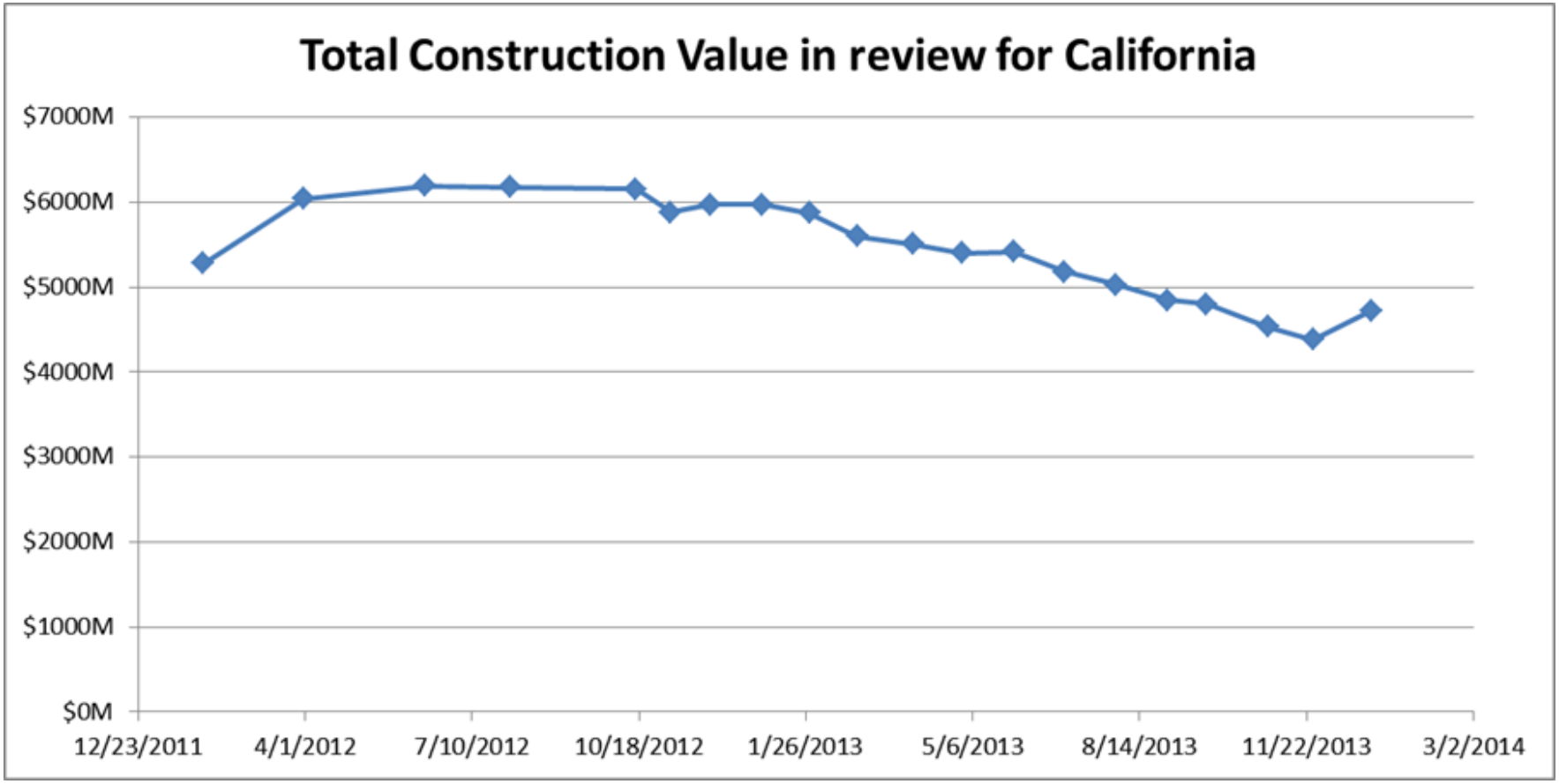

Number of New Projects Submitted Per Quarter

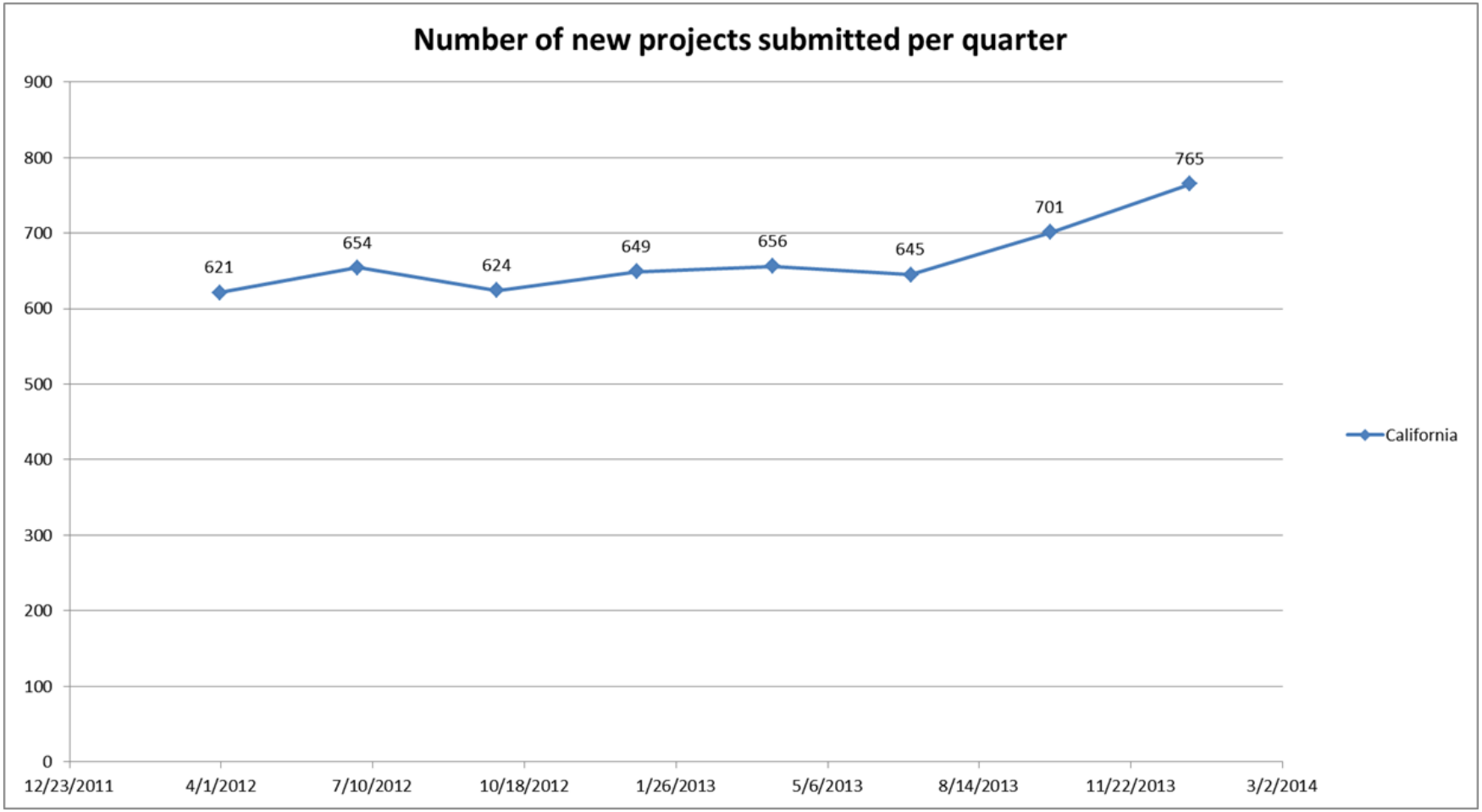

Construction Cost for New Projects Submitted

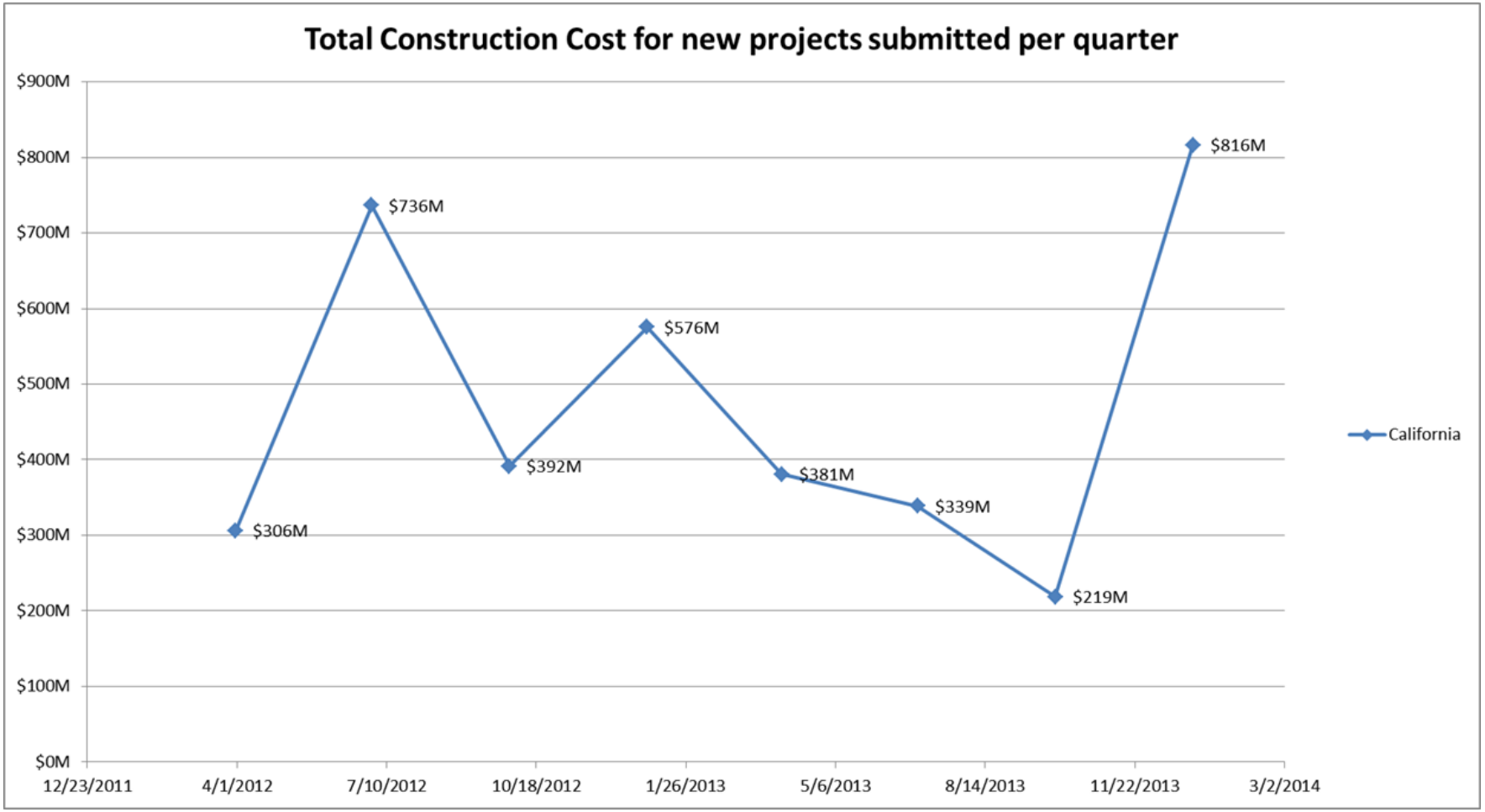

Based on Assigned Region

Projected Construction Cost for Seismic Compliance 2014 – 2020 Based on SB 499 Reports

Summary ForeCasting, 2013 SB 499 Data in Millions of Dollars

	2014	2015	2016	2017	2018	2019	2020	Total
Rebuild	4.5	17.8	354.9	354.9	343.9	341.6	213.0	1630
Replace	12.0	13.0	14.3	10.3	8.3	7.3	2.8	68
Retrofit	118.8	141.1	96.4	63.4	50.2	37.8	17.2	525
Remove	38.0	14.7	9.6	7.6	6.9	6.9	4.4	88
	173	186	475	436	409	394	237	2311

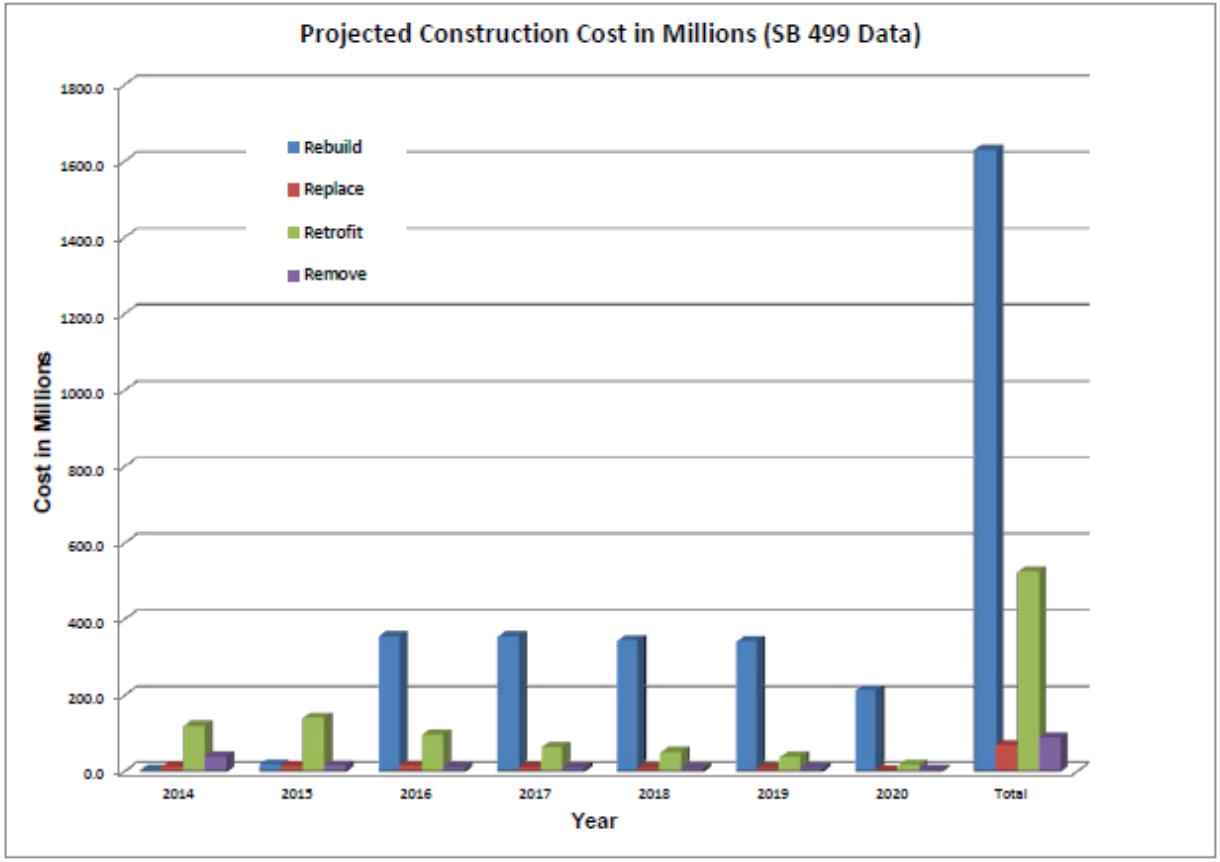

No. of Reviews 2013

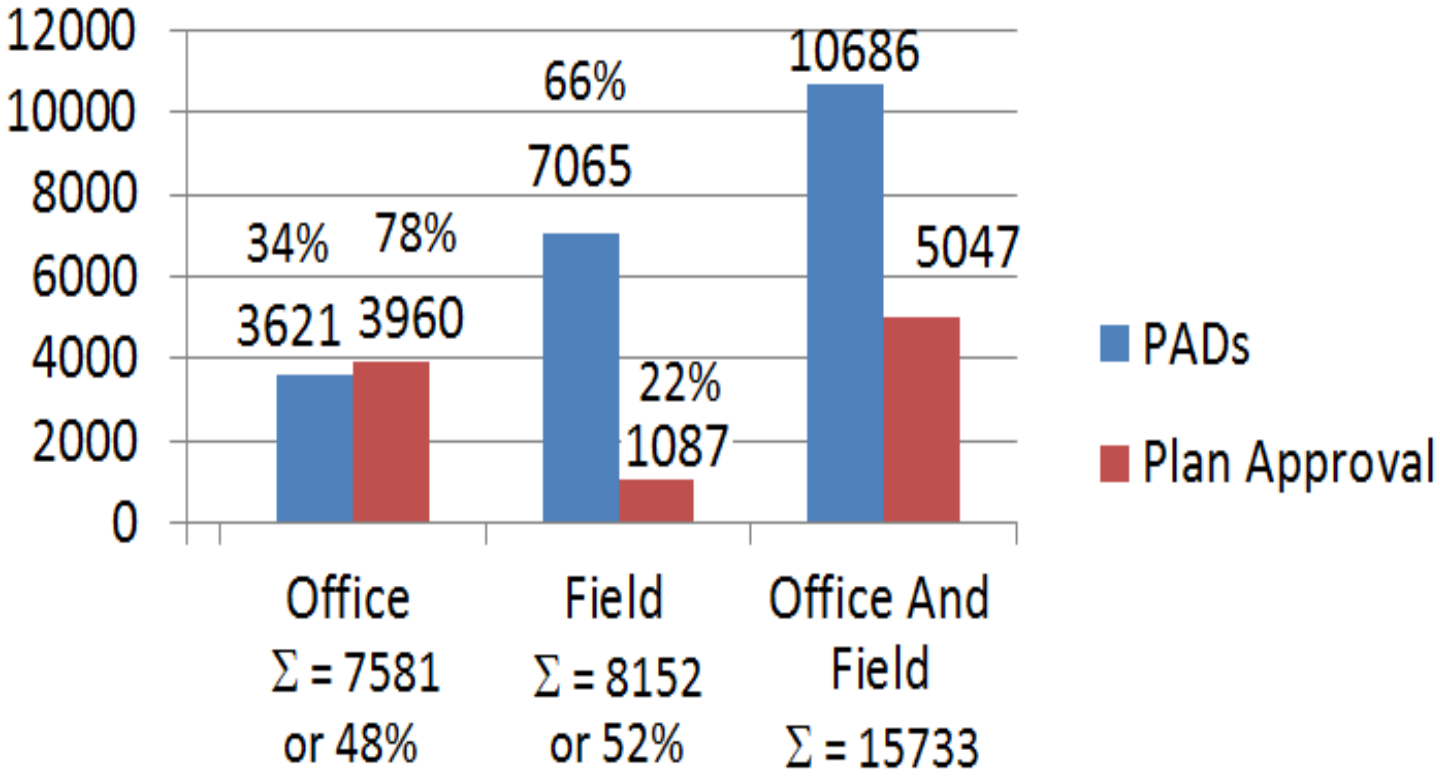

Ratio of PADS to Reviews = 2.11

No. of Reviews Year 2013

SNFs

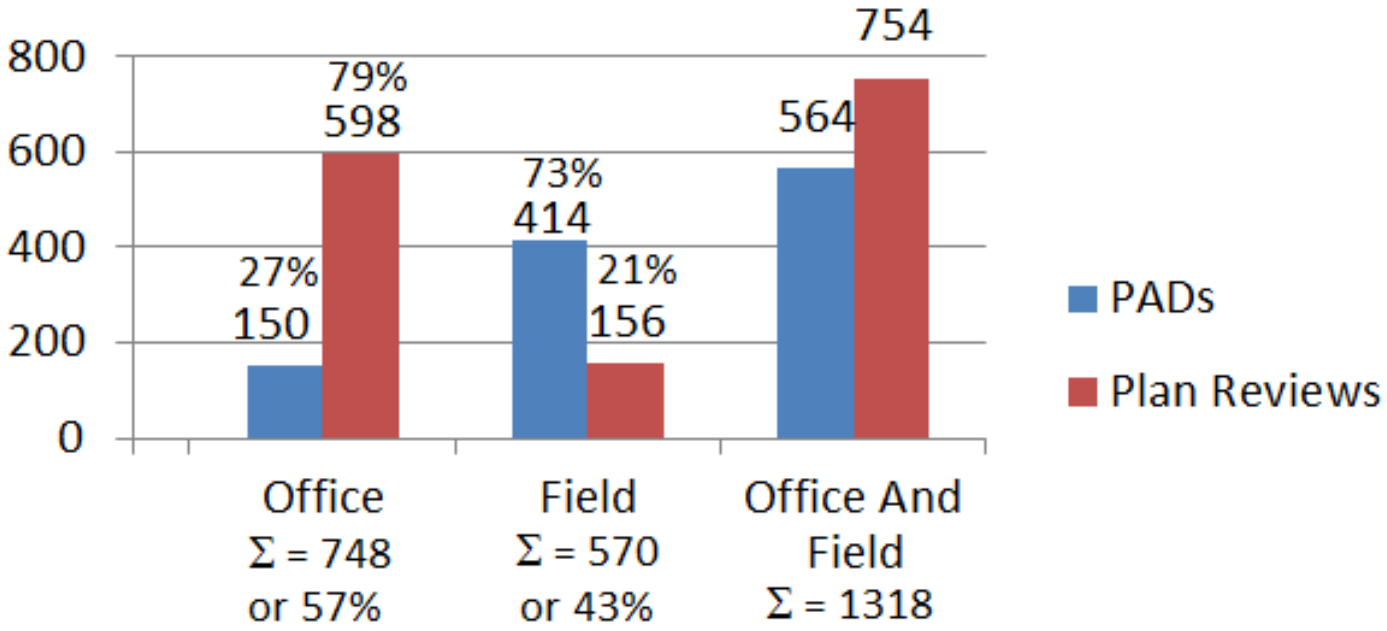

8.4% of total reviews

Ratio of PADS to Reviews = .75

No of PADs per $1mil. Project Cost

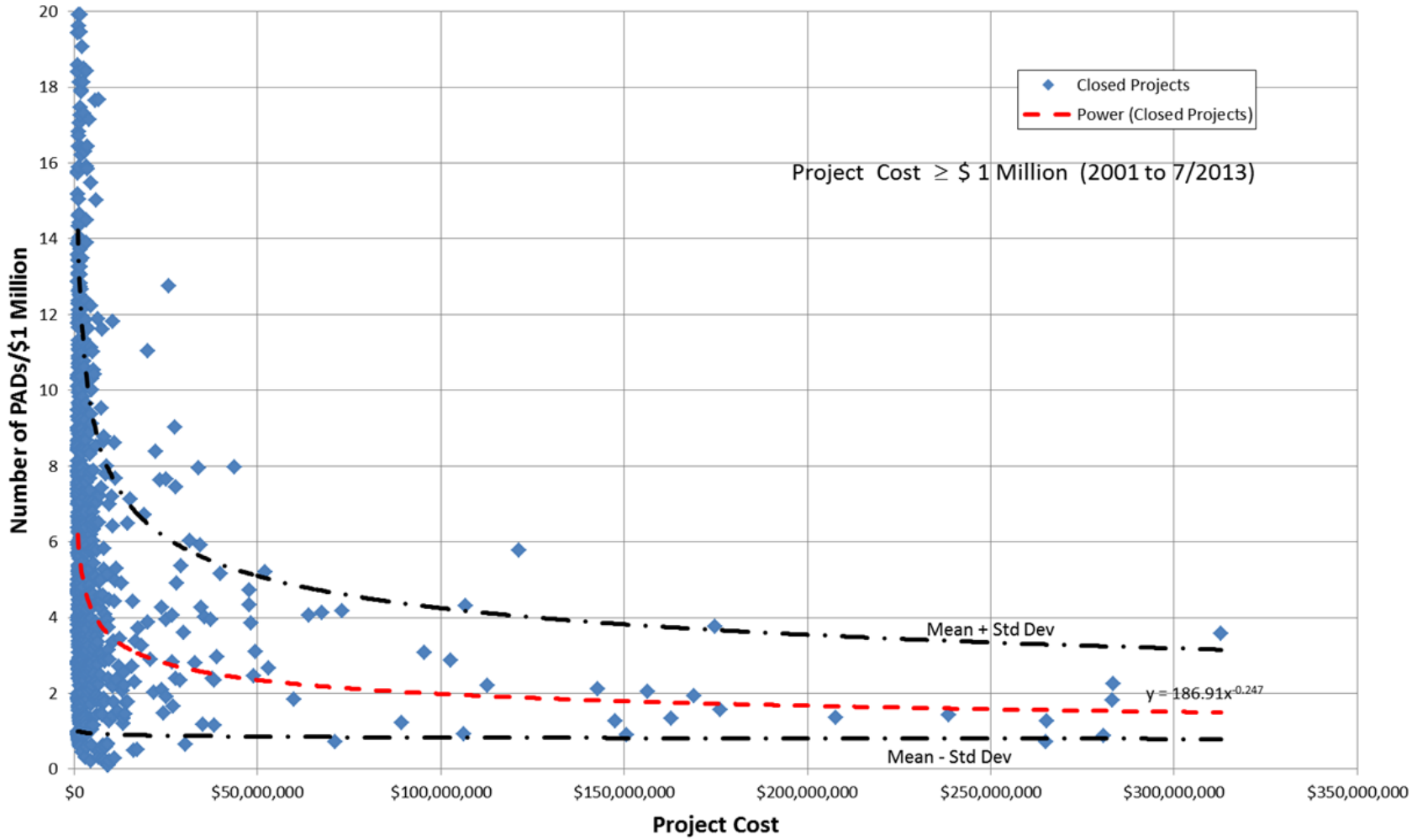

No of PADs per $1000 Project Cost

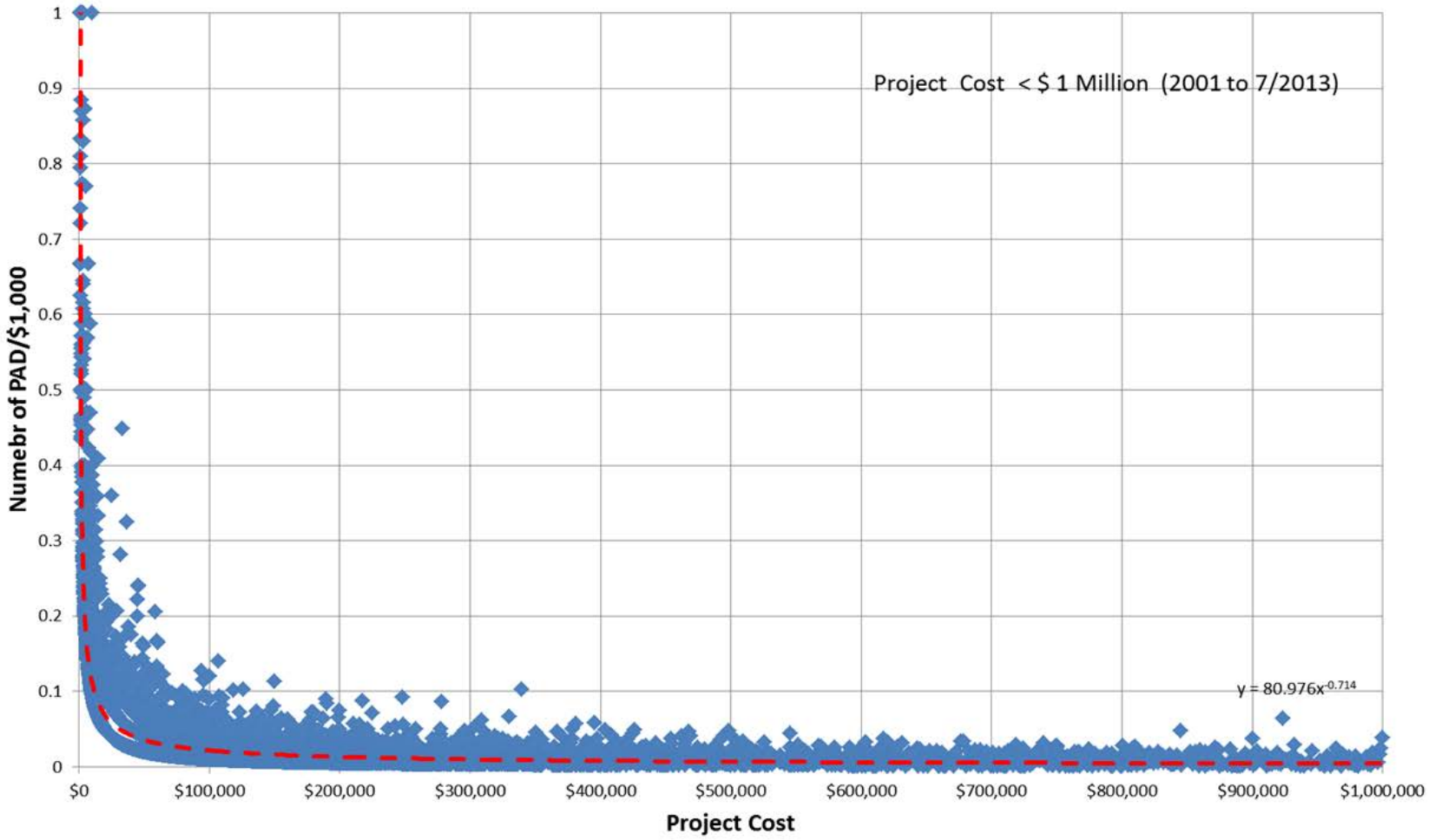

Performance Year 2013

Based on number of projects meeting the established goals

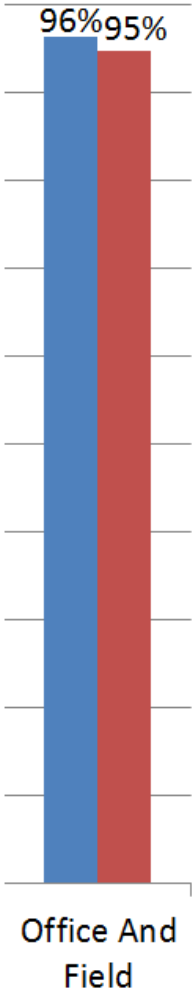

PAD Performance 2013

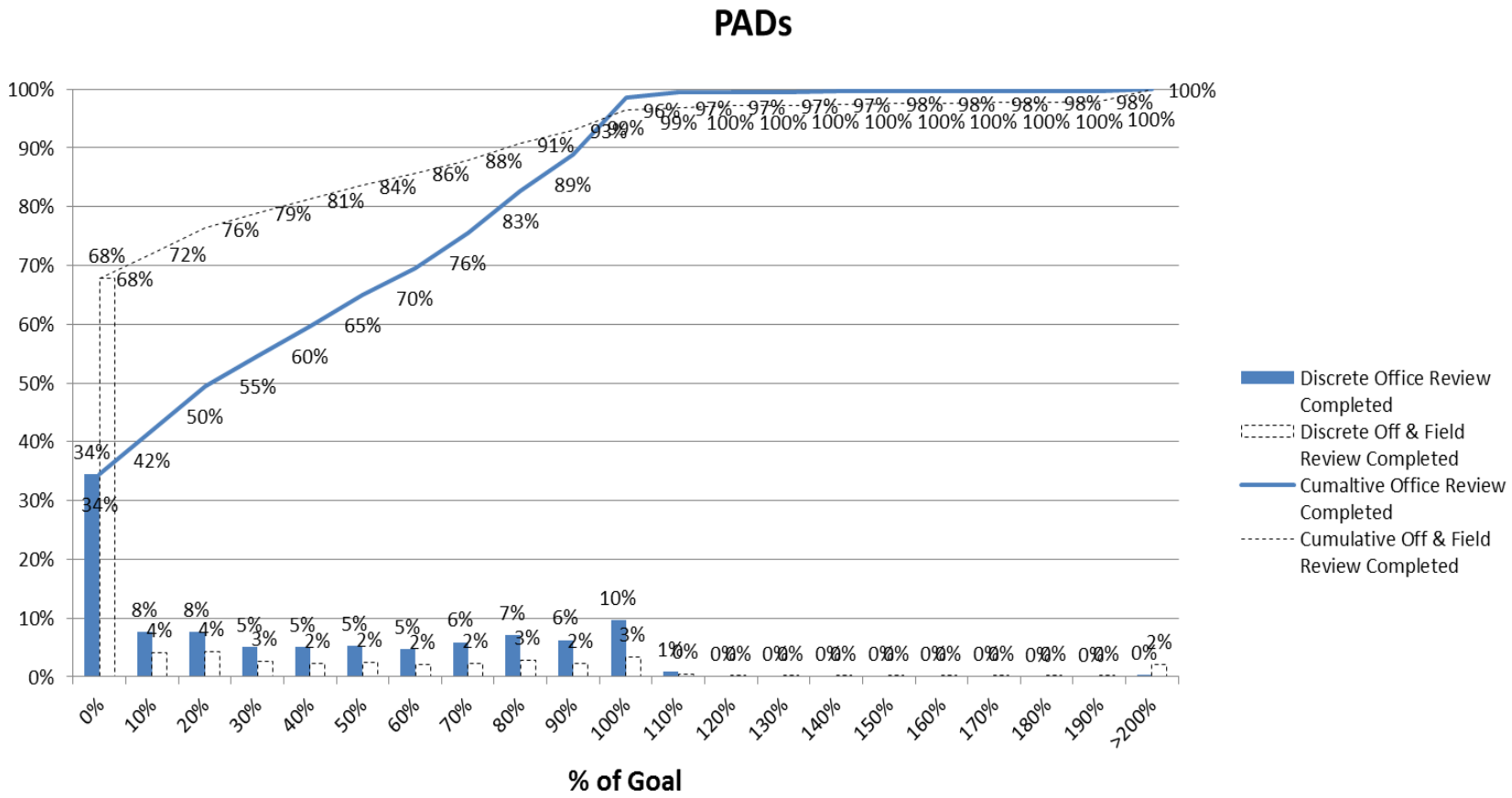

Plan Review Performance 2013

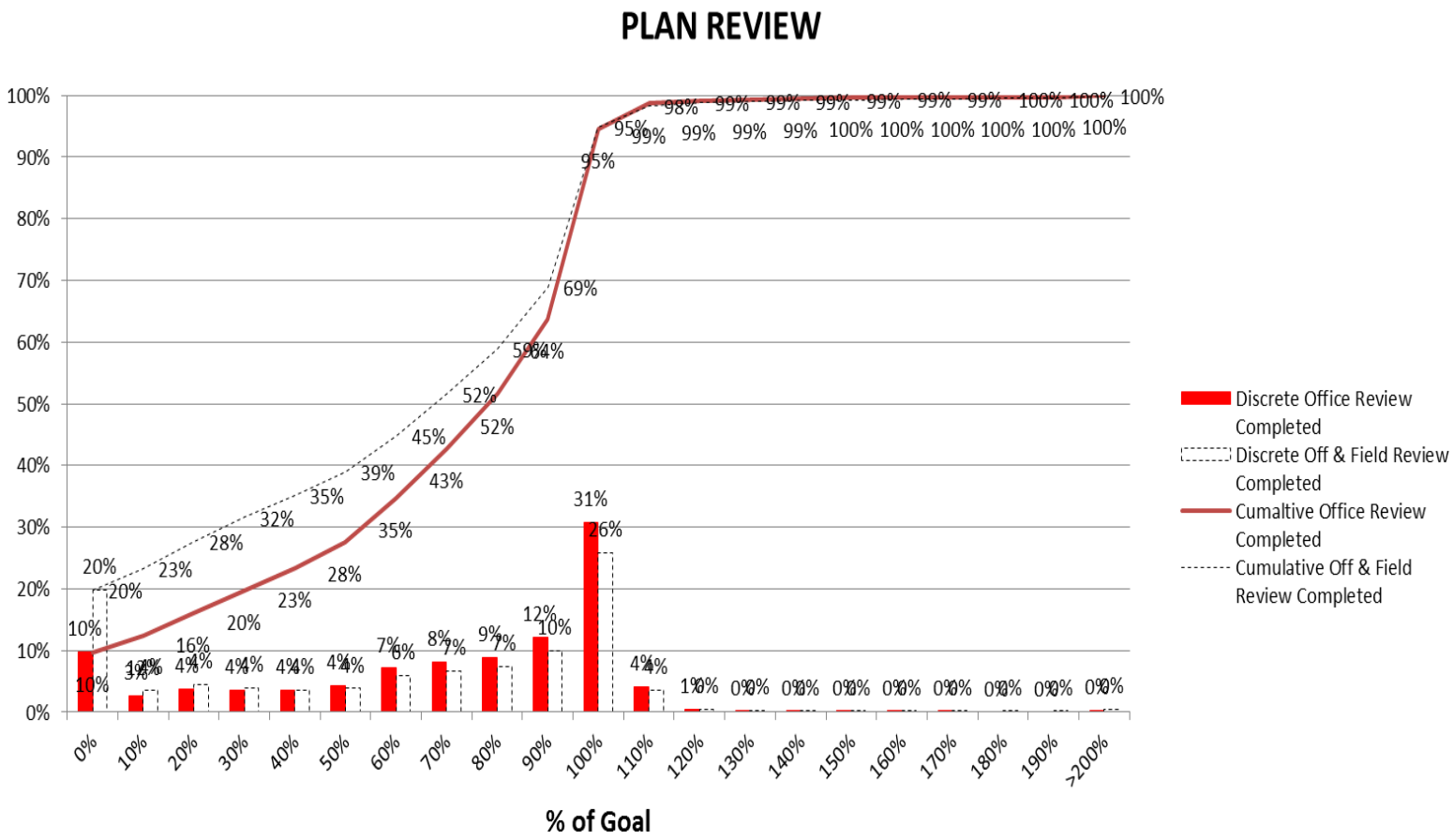

Workload Summary/Performance

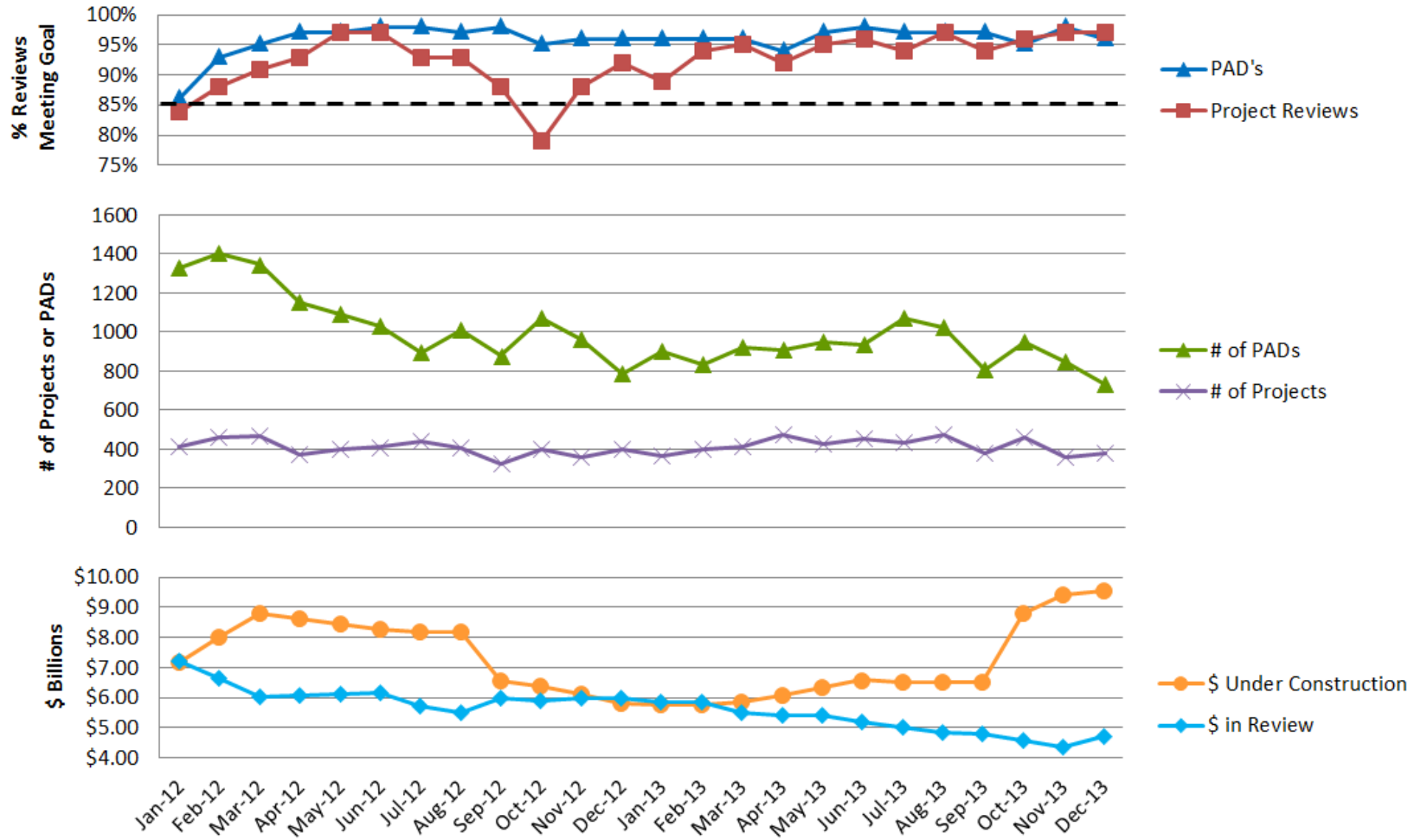

No. of PADs by Year

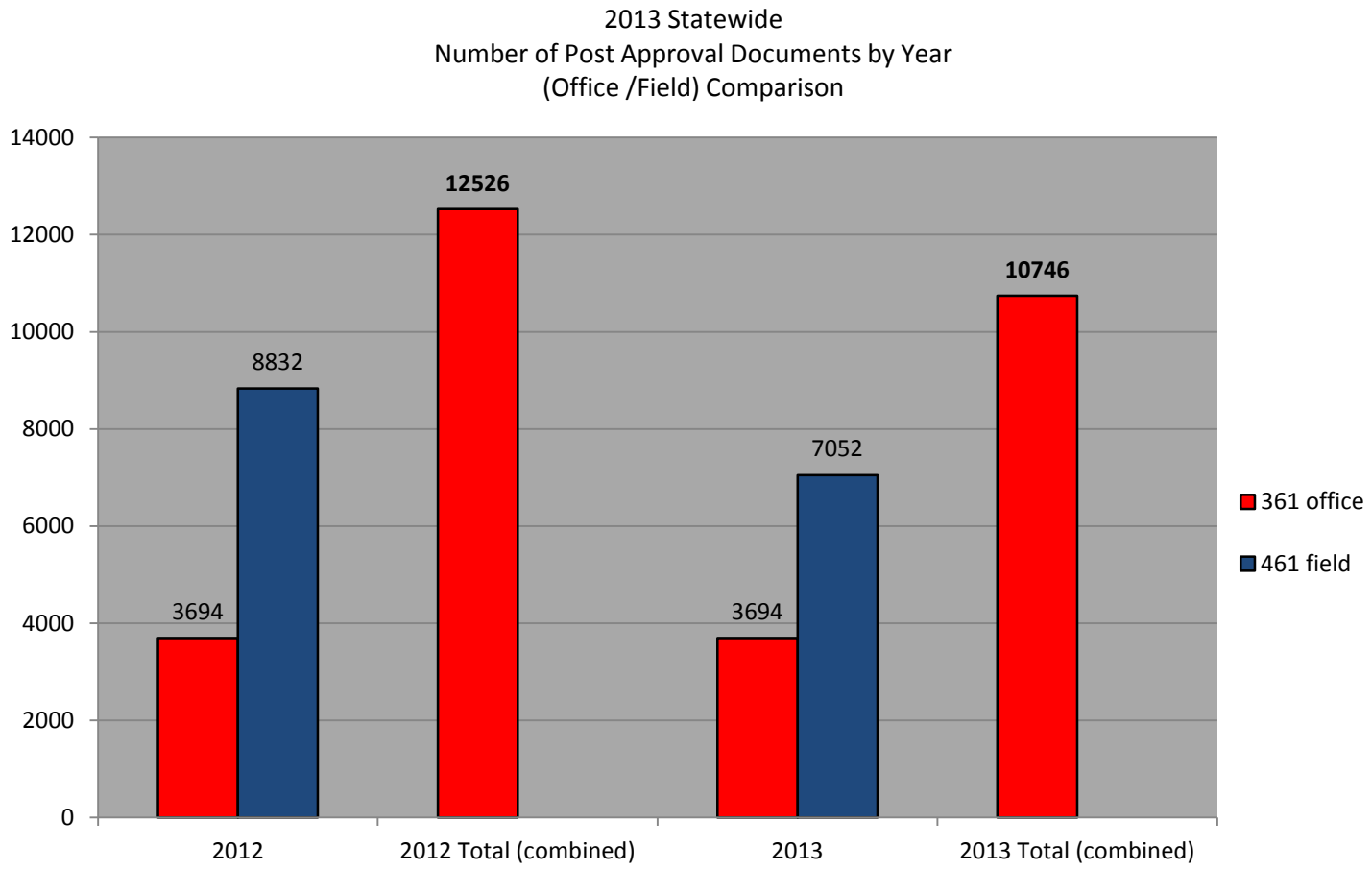

Overtime Comparison by Years

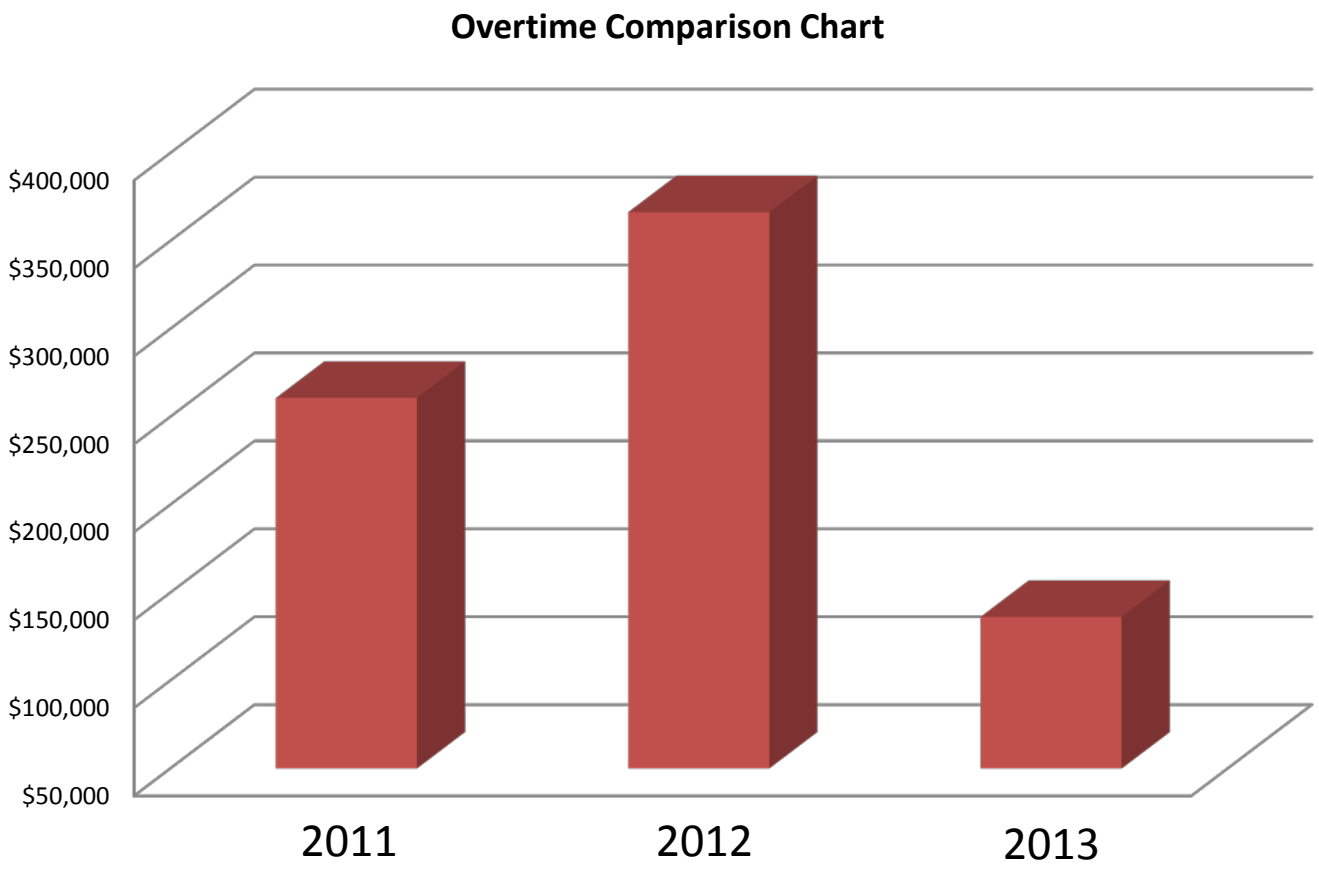

Rate of Projects Meeting Goals

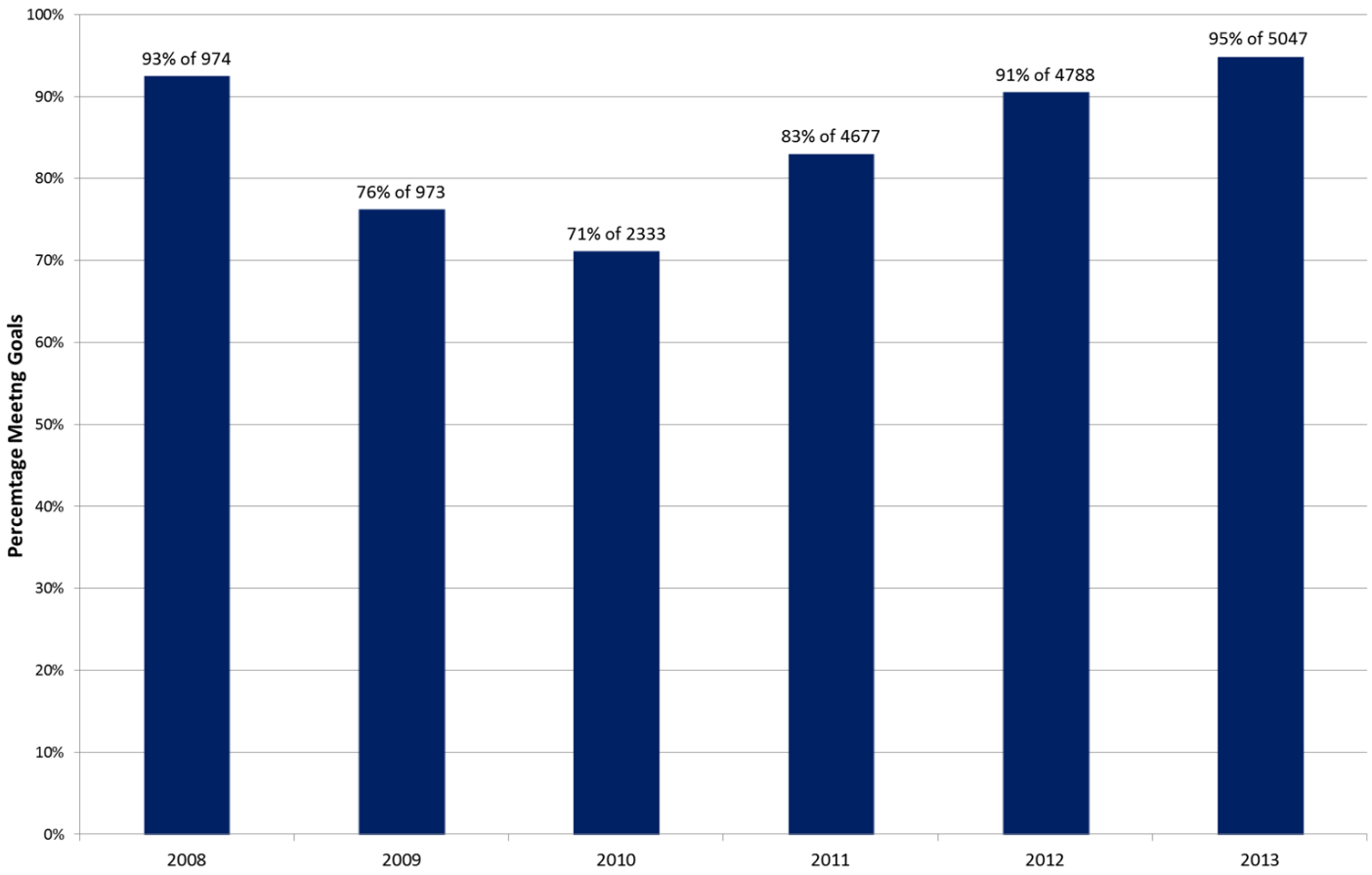

Plan Review Workload in Construction Value

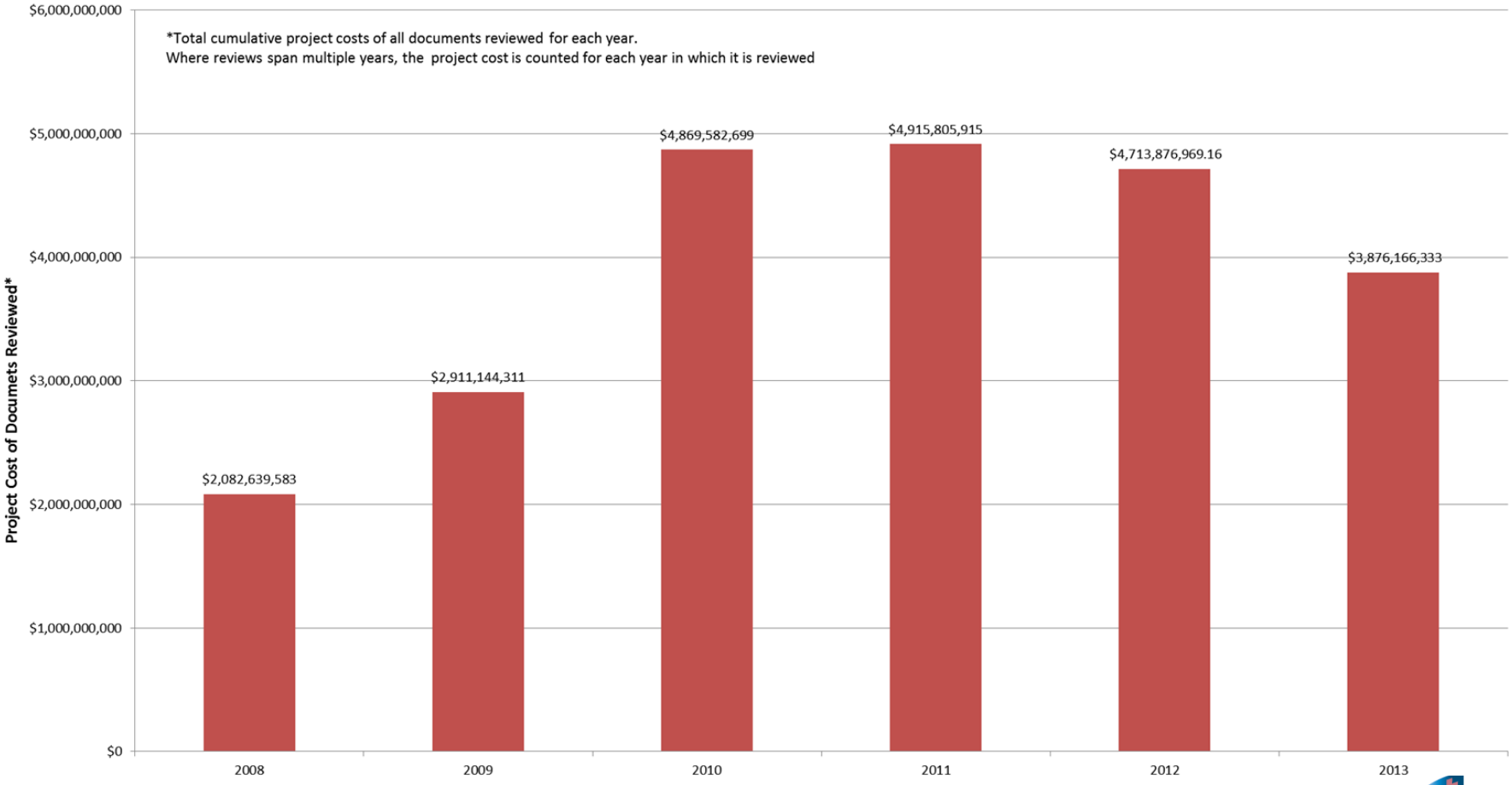

Performance Index, 2008-2013

Weighted by Number of Projects Reviewed

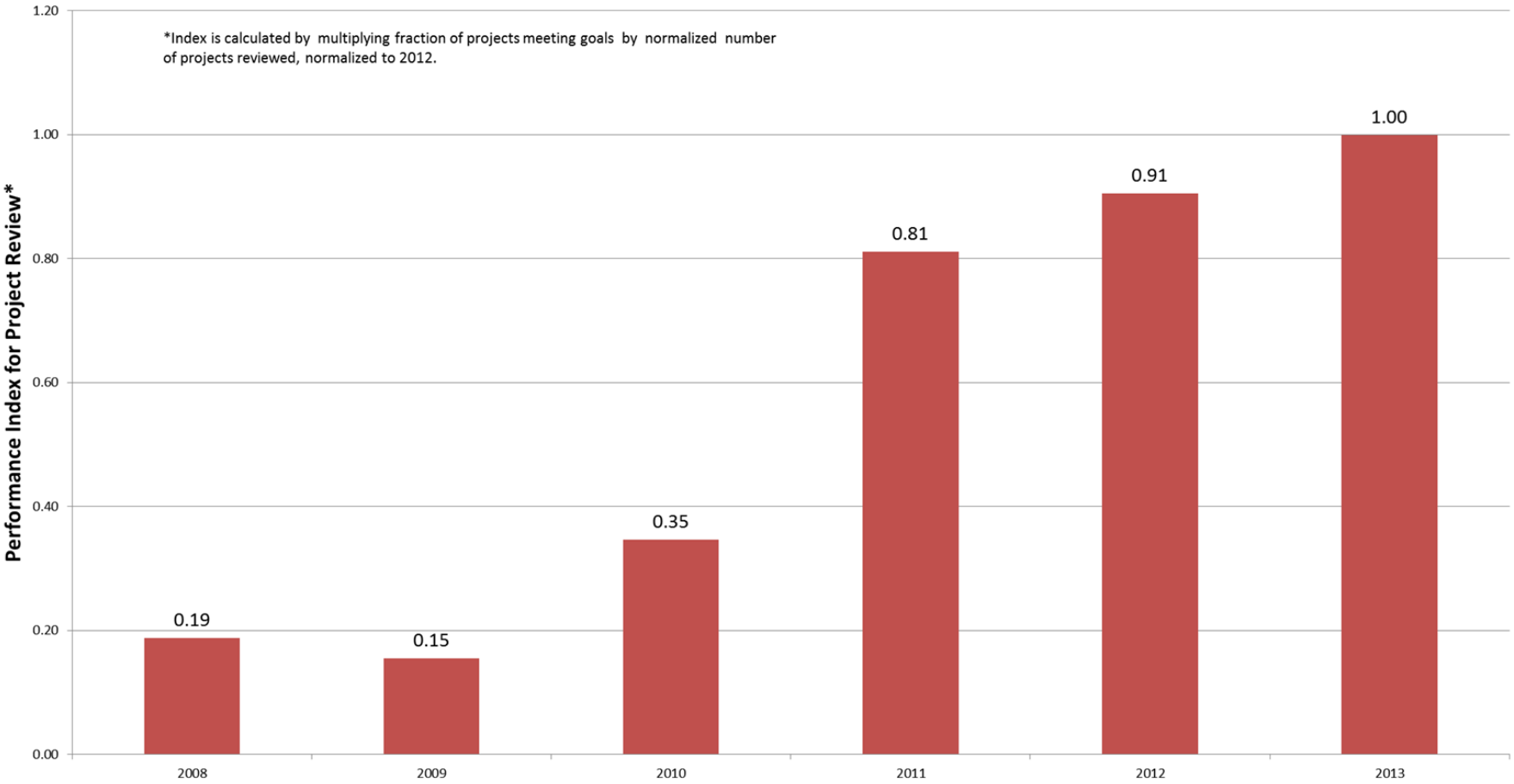

Yearly Average Review Days

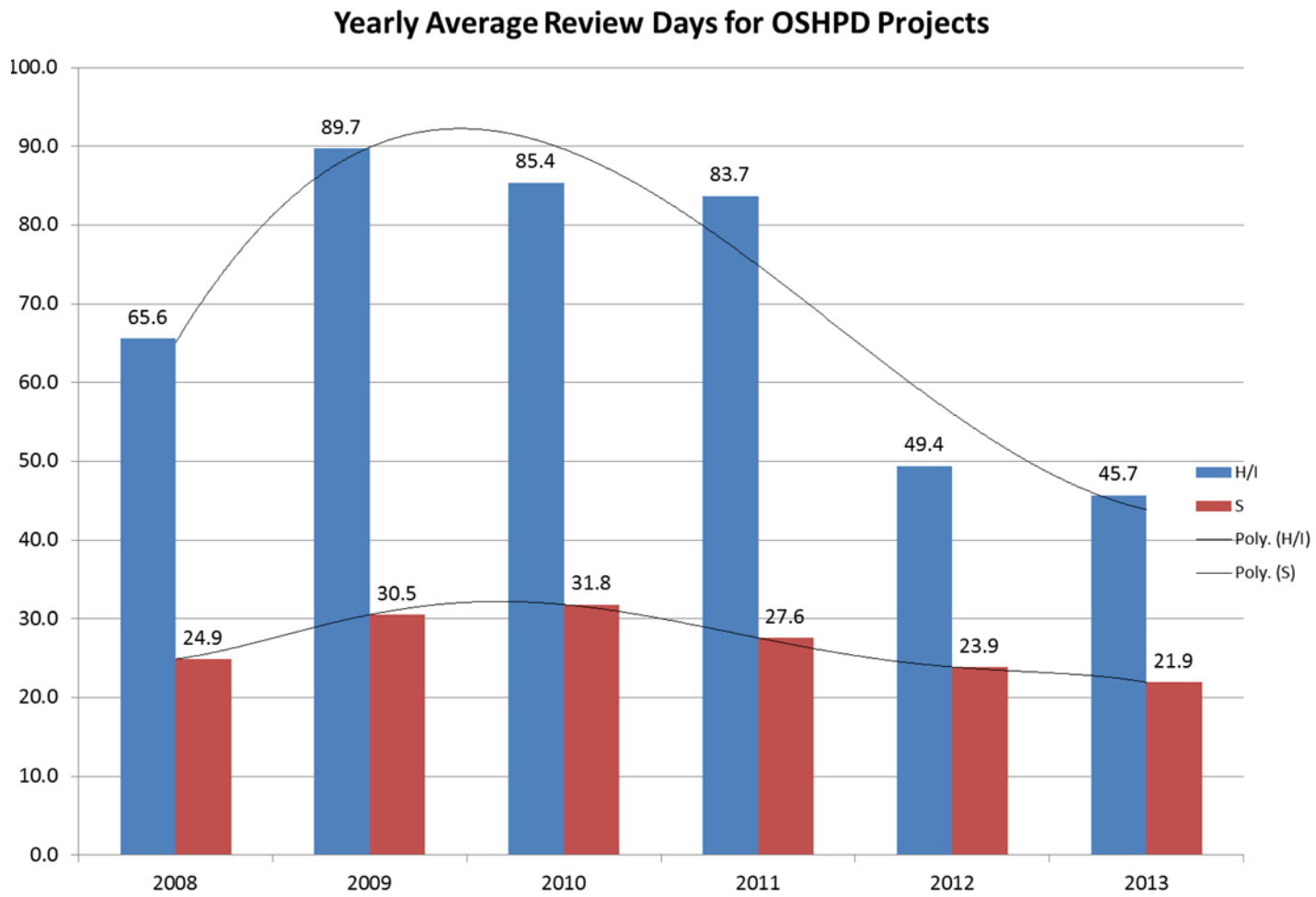

	2008	2009	2010	2011	2012	2013
No of Reviews	974	973	2333	4677	4788	5047
		3 furlough days/mo.	2 furlough days/mo.	1 furlough days/mo.		

Number of Permits – 4th Qtr. 2010 thru 3rd Qtr.+ 2013

Statewide combined Office and Field
Number of Permits Issued by Quarter

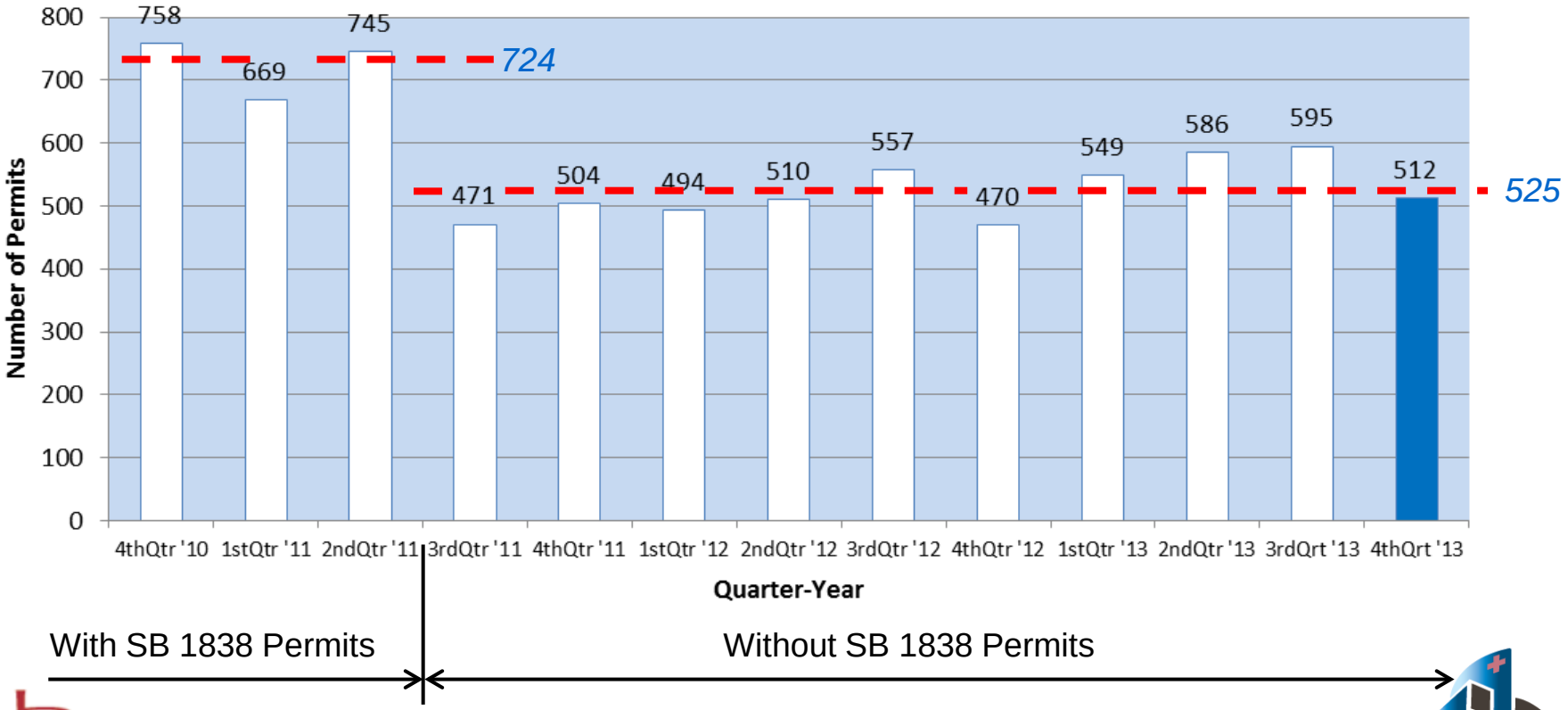

Number of Permits Issued Annually 2010 - 2013

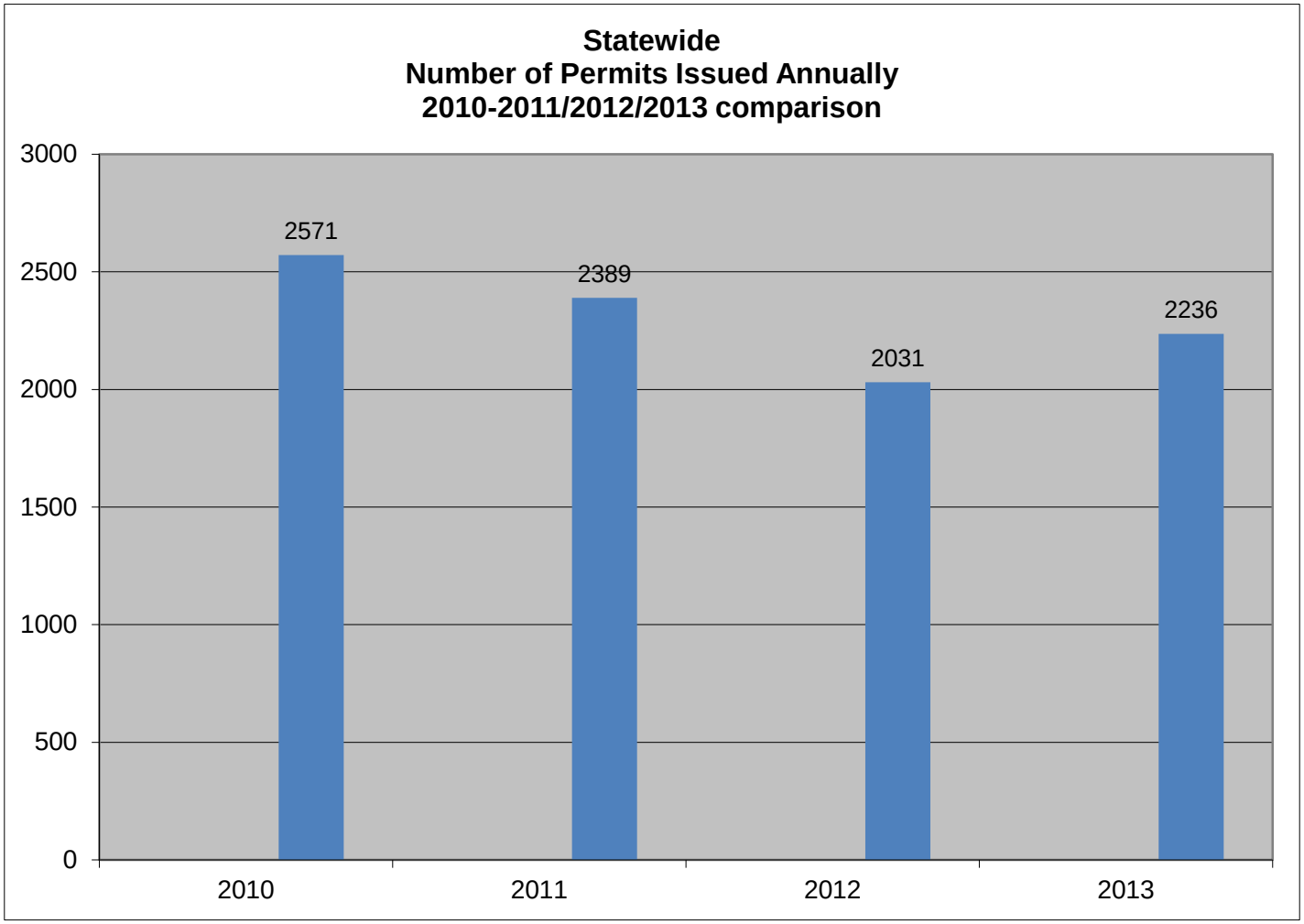

Number of SB 1838 Projects – 3rd Qtr.+ 2013

Statewide
Number of SB 1838 EXEMPT Projects Approved by Quarter

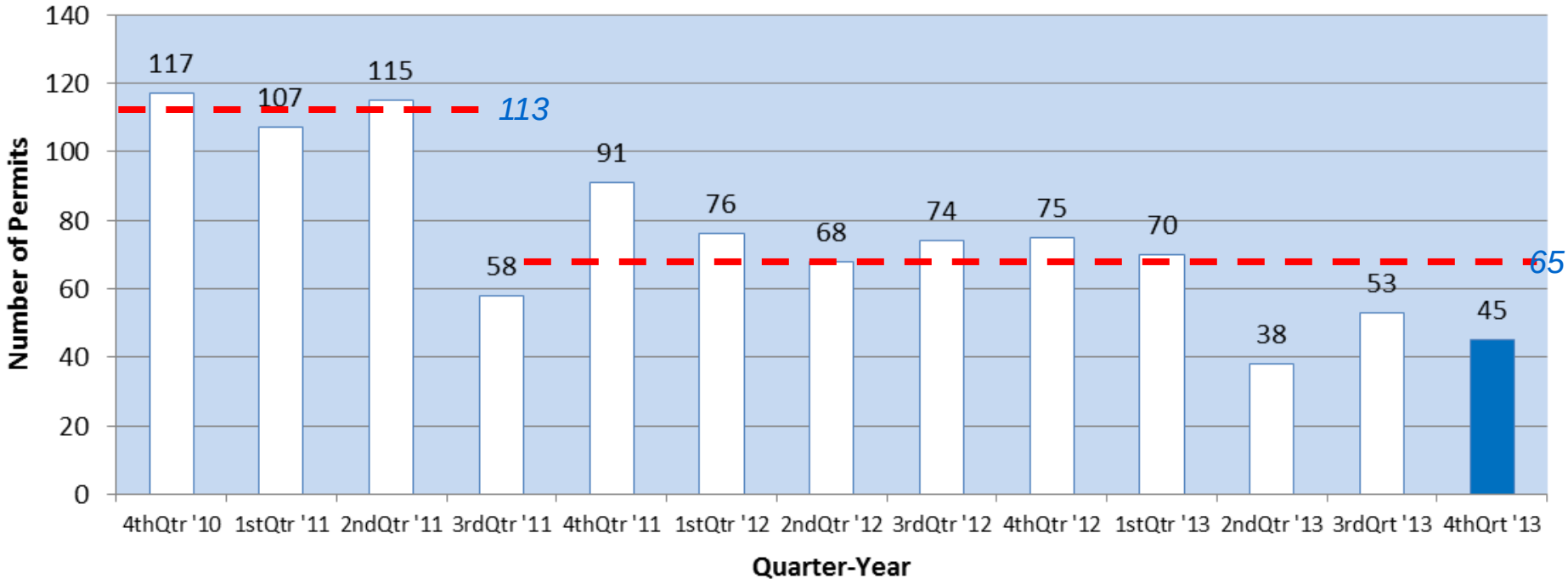

Number of SB 1838 Projects Issued Annually

Statewide
No. of SB 1838 EXEMPT Projects Approved Annually
2010-2011-2012-2013 Comparison

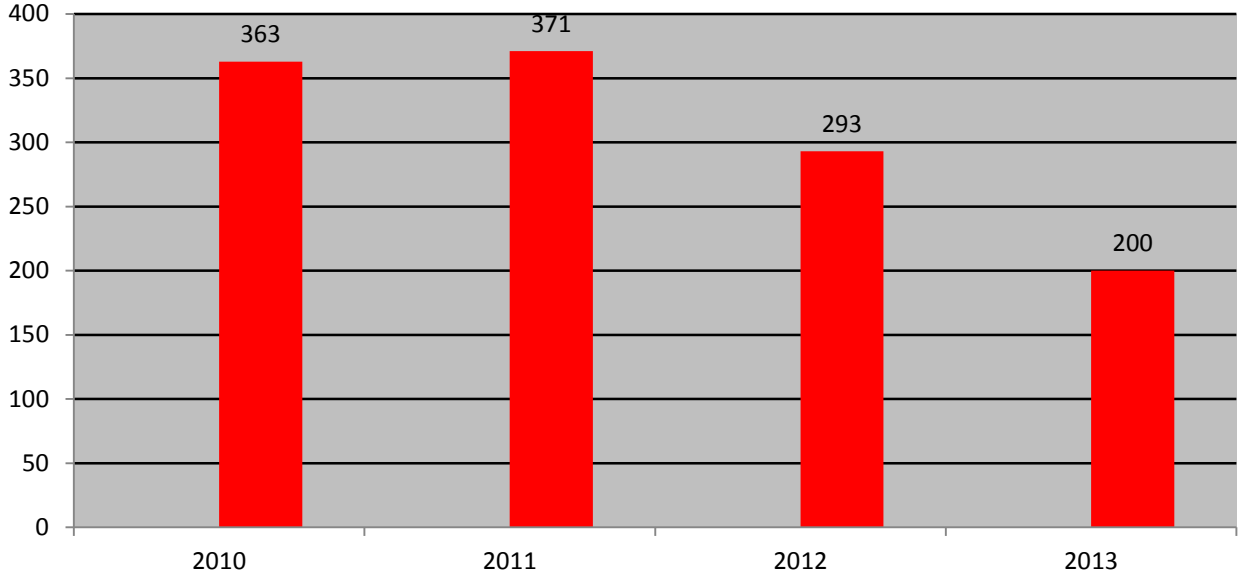

Figure V-10.

A&E Contract Expenditure Comparison

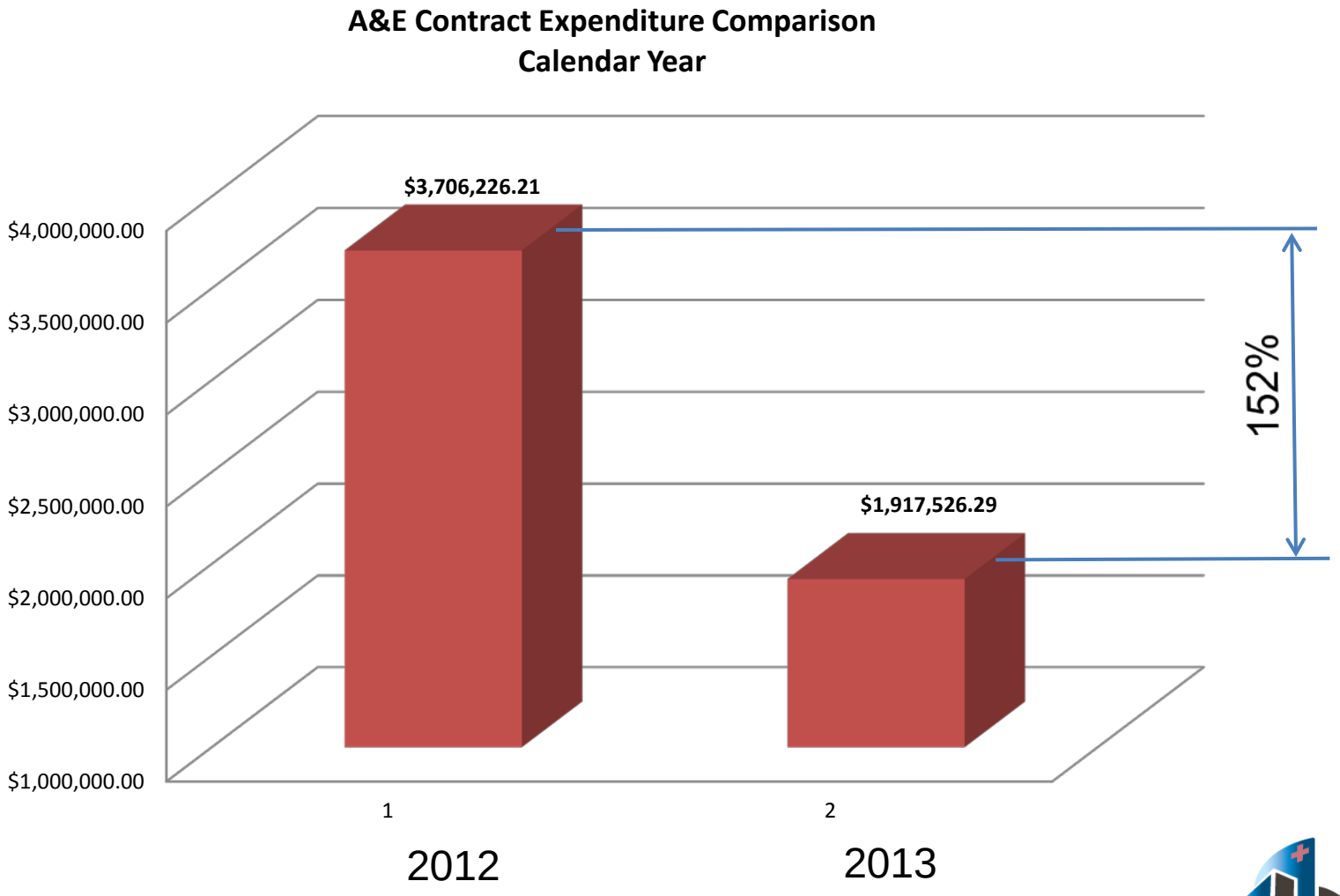

Future Educational Opportunities

Future Educational Opportunities

- *California Hospital Projects from A to Z – Tips From the Experts*
  - One-day condensed workshop planned for May time frame
  - Location – Sacramento area

- *All You Need to Know Assortment*
  - Electronic Services Portal – Gateway to OSHPD Services
  - Incorporation of Standard Details at Plan Review and During Construction
  - To Materially Alter or Not
  - What is a Functional Program?
  - OPMs
  - One day seminars planned for May/June time frame
  - Two locations – Northern California and Southern California

- *The 2013 Building Code*
  - One day seminars planned for September/October time frame
  - Two locations – Northern California and Southern California

CFC Training for Staff

Staff Technical Training by John Donelan

eSP Update

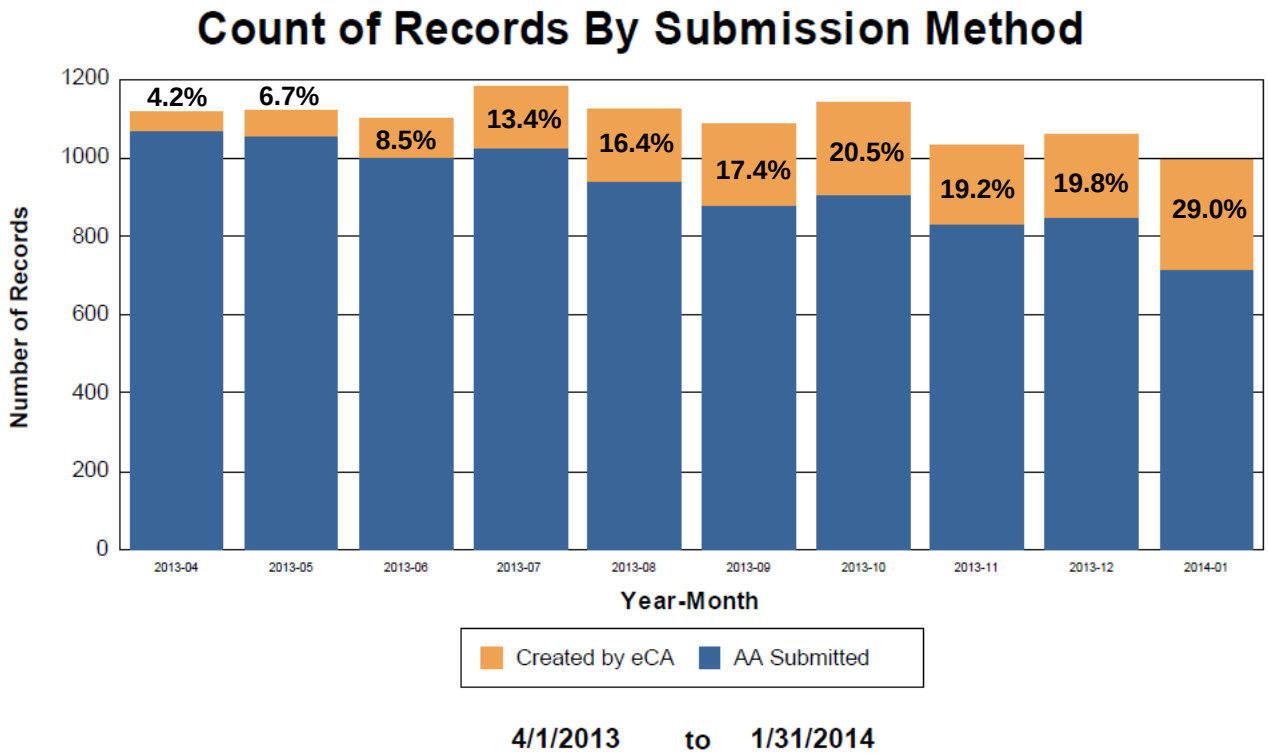

All Field reviews must be submitted in eCA beginning March 1, 2014 or they will be Office Reviews

eSP Update

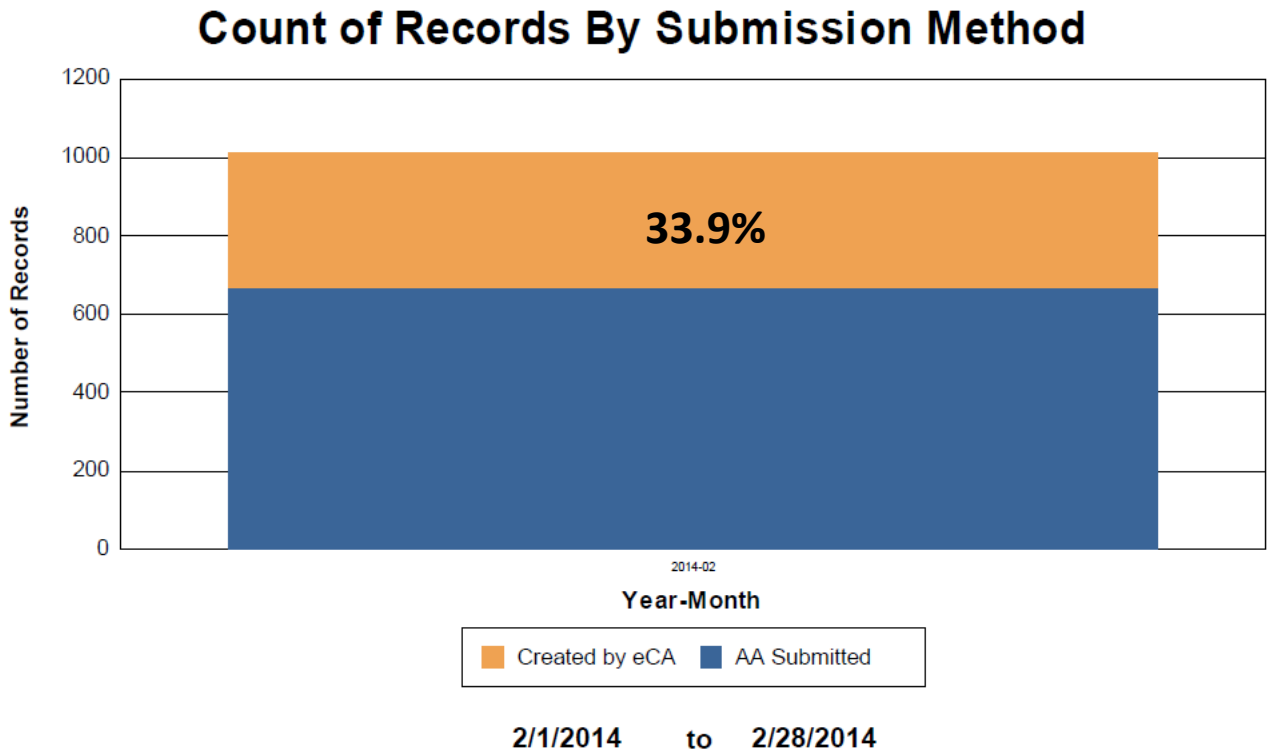

Milestone reached = 1/3 of submittals by eCA

FDD's Revenue, Expenditures, and Budget

FDD Revenues, Expenditures and Budget by Calendar Year

	2009	2010	2011	2012	2013
Revenues	$ 59,769,029	$ 71,823,805	$ 44,461,225	$ 49,146,081	$ 49,695,138
Expenditures	$ 47,276,266	$ 48,803,921	$ 48,920,307	$ 46,814,724	$ 46,266,629
Budget	$ 49,601,676	$ 51,647,246	$ 53,595,039	$ 55,197,788	$ 56,656,564

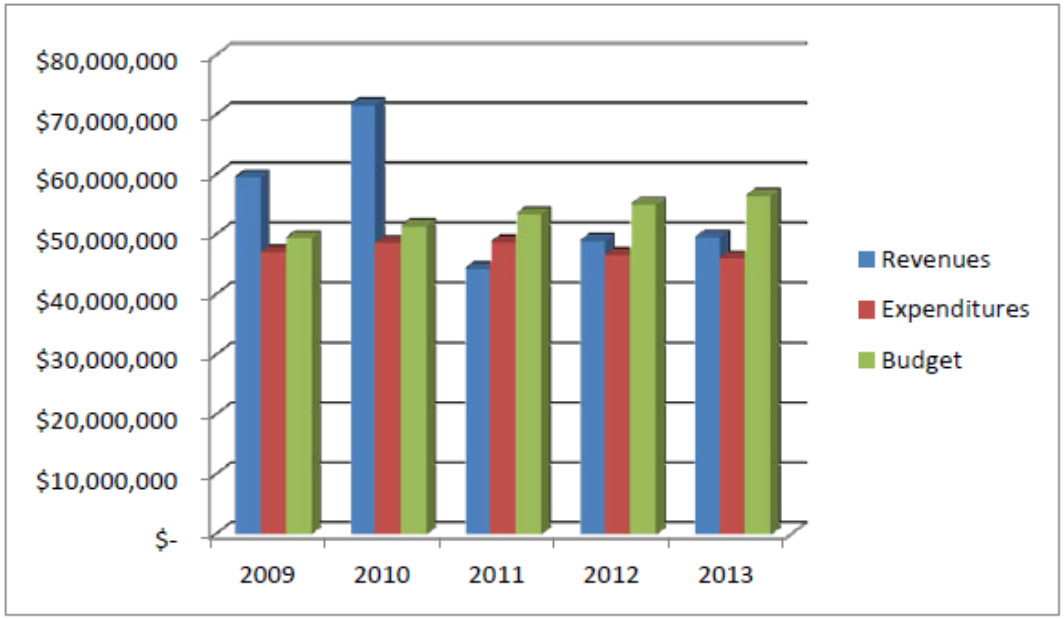

FDD Quality of Service Survey

OSHPD FDD QUALITY OF SERVICE SURVEY SUMMARY (11/8/13 to 2/18/14) – 21 Responses

Scale:

5 = Strongly Agree = A

4 = Agree = B

---------- Overall average = 3.5 (C+)

3 = Neutral = C

2 = Disagree = D

1 = Strongly Disagree = F

FDD Quality of Service Survey

My project was completed on schedule: 3.1 (C)

My project will be (was) completed within the anticipated budget: 3.1 (C)

I am currently (was) satisfied with the level of service I am receiving from OSHPD: **3.7** (B-)

The service provided by OSHPD staff has been timely: **3.7** (B-)

The service provided by OSHPD staff has been professional: 4.0 (B)

The service provided by OSHPD staff has been efficient: 3.4 (C+)

The service provided by OSHPD has been courteous: **3.9** (B-)

The service provided by OSHPD staff has been helpful: **3.7** (B-)

The service provided by OSHPD staff has been fully consistent with a high standard of legal behavior: **3.9** (B-)

FDD Quality of Service Survey

The service provided by OSHPD staff has been fully consistent with a high standard of ethical behavior: **3.8** (B-)

OSHPD regulations governing this project are (or were) clear: 3.2 (C)

OSHPD provided clear answers to my questions: 2.5 (D+)

OSHPD provided timely answers to my questions: 3.3 (C+)

The regulations governing this project were fairly applied: 3.2 (C)

The regulations governing this project were consistently applied: 3.5 (C+)

OSHPD procedures were fairly applied: **3.8** (B-)

OSHPD procedures were consistently applied: **3.6** (B-)

Communications regarding this project have been good: 3.5 (C+)

OSHPD employees I dealt with kept appointments as scheduled: **3.8** (B-)

OSHPD services added value to this project: 3.5 (C+)

FDD's Operational/Strategic Planning

Challenges that FDD will be facing over the next 4 years:

Socio-Cultural

- Aging population - requires more skilled nursing facilities, psych facilities, dementia services, assisted living. Regulations needed to make it easier and less costly to design these buildings
- ACA Impact -- change in direction of healthcare provider - consolidation - shift from in patient to out-patient. FDD needs to adapt to a workload of small projects that are needed in a timely manner.

FDD's Operational/Strategic Planning

Challenges that FDD will be facing over the next 4 years:

Technological

- How industry does business, such as virtual office visits, is changing faster than FDD can
- How industry wants to deal with FDD
- How FDD does its processes - change codes
  - Healthcare facility design, construction, and plan review are using more information technology and becoming more efficient

FDD's Operational/Strategic Planning

Challenges that FDD will be facing over the next 4 years:

Technological cont.

- Healthcare delivery models will continue to change at a rapid pace. FDD needs to change its modes of doing plan review to keep up with technological advances in healthcare.
- Decreased personal interaction could lead to problems, errors, mistakes, and wrong decisions
- Increasing in demand without proportionate increase in available money may reduce the quality and access.

FDD's Operational/Strategic Planning

Challenges that FDD will be facing over the next 4 years:

Economic

- FEEs do not cover cost of providing services for projects with construction costs below $400,000.00 and all SNF projects
- More smaller projects and less larger projects
- Decreased workload requiring re-evaluation of business processes
- Increased demands, needs and expectations of clients

FDD's Operational/Strategic Planning

Challenges that FDD will be facing over the next 4 years:

Political

- Uncertainty in the healthcare industry regarding delivery methods and reimbursements
- Increased demands, needs and expectations of clients

FDD's Operational/Strategic Planning

Objectives and Opportunities:

- Safe and functional hospital buildings through more efficient, timely, and quality reviews and construction observation
- Improve staff efficiency and effectiveness
- Invest in technology to keep pace with industry standard of development and design/construction
- Reduce costly business processes by utilizing technology to the extent possible
- Regular training for staff and industry to ensure knowledgeable, consistent code enforcement
- Simplify processes – improve workflow
- Optimize business processes based on project type
- Develop new cost effective building standards as the approaches to healthcare delivery changes/evolves
- Develop and implement meaningful performance objectives

FDD's Operational/Strategic Planning

Objectives and Opportunities:

FDD's Top 3 Objectives for 2014

1. Continue to expand electronic plan review capabilities
2. Continue to expand the standard details, especially those for skilled nursing facilities
3. Continue to develop over-the-counter/computer capabilities and opportunities

HBSB Information Technology Committee

Discuss / establish committee goals for 2014. Some potential goals for discussion:

- Poll vendors to see what new technologies might be developed and potentially used in hospital systems
- Request CISCO systems explain their redundancies on critical hospital systems
- Ensure current code and regulations do not prevent the use of emerging technology in hospital systems
- FDD staff share with the committee what they are seeing in electronic plan review
- Discuss the potential for Fire & Life Safety systems that utilize emerging technology
- Emerging technology for structural systems
- Assist FDD in determining how technology can be used to improve plan review processes
- Request "guest speakers" from hospital IT representatives

HBSB Information Technology Committee

Limitations:
Budget
Procurement Rqmts.
Limited IT Support
Slow Pace of Gov't.
Controls
Security

Possible Solutions:
Partnering
Pilot Programs
R&D by Others
Lower Expectations

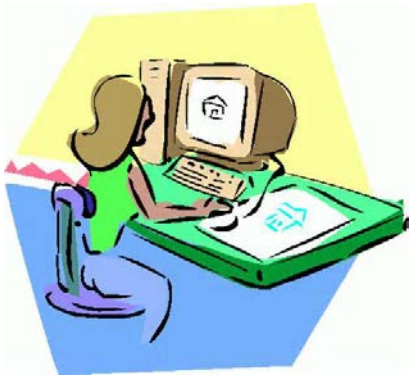

Cloud Issues:
Security
Controls
Reliability
Credibility
Manageability
Survivability
Authenticity
Archives
Ownership
Public Records

Facilities Development Division

Pilot Project Using Blue Beam Technology

FDD's Operational/Strategic Planning

Objectives and Opportunities:

FDD's Top 3 Objectives for 2014

1. Continue to expand electronic plan review capabilities
2. Continue to expand the standard details, especially those for skilled nursing facilities
3. Continue to develop over-the-counter/computer capabilities and opportunities

Standard Details

- 2007 CBC Standard Partition Wall Details
- 2010 CBC Standard Partition Wall Details
- 2010 CBC Standard Suspended Ceiling Details

OSHPD PREAPPROVED DETAILS (OPD) VALID FOR PROJECTS BASED ON THE CALIFORNIA BUILDING STANDARDS CODE, 2013 (CBSC 2013) AND EARLIER CODES*		
OPD Number	Description	Comments
OPD-0001-13 TO OPD-0025-13		
OPD-0001-13	2013 Standard Partition Wall Details	
OPD-0002-13	2013 CBC Standard Suspended Ceiling Details	
OPD-0003-13	2013 CBC Standard Gypsum Board Ceiling Details	
		• *Return to top*

In Progress: Standard Fire Life Safety Details

The "How To Guide" Series
Companion Documents to FREER Manual

OSHPD

Facilities Development Division

A HOW TO GUIDE FOR WATERHEATER REPLACEMENT

1

How To Guide Series

FOR SINGLE STORY LIGHT FRAME SKILLED NURSING FACILITIES & INTERMEDIATE CARE FACILITIES

A Companion Document to the OSHPD FREER Manual

March -2013

The "How To Guide" Series
Companion Documents to FREER Manual

How-To Guide

The How-To Guides are companion documents to the OSHPD Field Review, Exempt, and Expedited Review (FREER) Manual intended as general reference guides and/or checklists to facilitate small repair and maintenance projects.

The How-To Guides are intended only for single-story Skilled Nursing Facilities (SNFs) and Intermediate-Care Facilities that are of wood frame or light metal frame construction and excluded from the definition of Hospital Building under Article 2, Section 7-111 in the California Administrative Code (CAC).

Water Heater Replacement

A water heater replacement requires a Building Permit. Simple replacement of existing water heaters in qualifying Skilled Nursing Facilities can be considered maintenance projects if certain criteria are met. This How-To Guide presents those criteria in a checklist format for general assessment of the specific project conditions.

The facility should review this checklist with their OSHPD Compliance Officer to determine qualification, assessment of specific project conditions and determination of possible approaches to the application, review, permitting and construction process. Possible approaches include, but are not limited to:

Straight Replacement – For very simple removal and replacement of an existing water heater, where all related conditions are fully compliant with current code and no modifications, repair, or remedial work is necessary, the facility may pursue permitting using owner's forces.

Replacement with Minor Repair Work. – For relatively simple removal and replacement of an existing water heater, where very minor modification, repair, or remedial work is necessary to bring the system into compliance with current code, the facility may pursue the project with a General Contractor, or Plumbing Contractor, licensed in California, dependent upon the scope and nature of the remedial work involved.

More Involved Work – For more involved removal and replacement of an existing water heater, where modification, repair or remedial work is necessary to bring the system into compliance with current code, the facility may need to involve a licensed design professional (architect and/or mechanical engineer dependent upon the scope and nature of the remedial work). This work might be of sufficiently limited scope that field review by the Compliance Officer can be used. More involved work may require review by the Office under the Rapid Review Unit or by the Regional Architectural & Engineering Unit.

Compliance Officer – Determination of eligibility and appropriate permitting process is the responsibility of the Compliance Officer. Facilities are encouraged to work with their Compliance Officer prior to assuming eligibility or an approach to permitting.

Page 1 of 11

The intent of this Guide is to provide a general reference for the enforcement of code requirements for replacing water heaters in Single Story Skilled Nursing Facilities (SNFs). This guide/checklist is for storage type water heaters only.

*Unless otherwise noted, the following code excerpts apply to **replacement** water heaters. It is important to note that an existing water heater is a water heater that was previously inspected and approved by OSHPD.*

		Compliance Yes	Compliance No
A.	***Project Description:***		
1.	The project is for a single-story building of wood frame or light steel frame construction.	❑	❑
2.	The project is only for water heater replacement as routine maintenance.	❑	❑
3.	The Estimated Construction Cost or Contract Amount does not exceed $50,000.	❑	❑
4.	The replacement water heater tank is fuel-fired for fuel-fired, or electric for electric, the same volume (no increase or decrease) and a BTU rating, or wattage, no more than the tank being replaced, and does not exceed 100 gallons, 200,000 BTU input rating or 12,000 watts.	❑	❑
5.	The existing installation has two tanks in system (required by Code) and one or both require replacement.	❑	❑
6.	The existing water heater tank is on the ground floor of the facility and is floor mounted. Wood floors (if present) have the structural integrity to support the tank and are protected with a corrosion-resistant drainage pan. Water heaters located in a garage are not eligible for the Checklist Program.	❑	❑
B.	***Permitting Process:***		
7.	It shall be unlawful for any person to install, remove, or replace or cause to be installed, removed, or replaced any water heater without first obtaining a permit from OSHPD to do so. (2010 CPC 503)	❑	❑
9.	Before commencing construction or alteration of any health facility, the governing board or authority thereof shall submit an application for plan review to the Office, and shall obtain the written approval thereof by the Office describing the scope of work included and any special conditions under which approval is given (CAC, Section 7-113(a)). Failure to obtain the necessary reviews and approvals prior to commencing construction will result in examination fees, in addition to application fees (CAC, Section 7-128)	❑	❑
10.	**Building Permit Application Requirements** – A completed Building permit application form is required. All Projects - Fill out, sign and submit OSHPD Form OSH-FD-121 Project Application, indicating AB 2632, Routine Maintenance-Water Heater Replacement.	❑	❑

Page 2 of 11

The "How To Guide" Series
Companion Documents to FREER Manual

OSHPD Web site Address

11. **Manufacturer's installation, operating, and maintenance instructions.** The installing agency shall leave the manufacturer's installation, operating, and maintenance instructions in a location on the premises where they will be readily available for reference and guidance for the Authority Having Jurisdiction (OSHPD), service personnel and the owner or operator. (2010 CPC 508.26) ❑ ❑

12. **Planning Approval** – Planning approval is required from the local Authority Having Jurisdiction over the site prior to applying for a permit when the water heater is to be on the outside of the facility. (i.e. water heaters in an outdoor cabinet). ❑ ❑

13. **Inspections** – A final inspections is required after all the work has been completed. ❑ ❑

C. *General Requirements:*

14. Every contractor shall be registered with the Department of Labor and Industries before installing/reinstalling, making repairs, or modifications to any boiler, pressure vessel or hot water heater. (add in here the part 1 admin requirements) ❑ ❑

15. The owner or user of any boiler required to be inspected upon installation/reinstallation shall not operate the boiler, pressure vessel or hot water heater until a certificate-inspection has been made. ❑ ❑

D. *Prohibited Locations*

16. **Gas-fired water heaters** , which depend on the combustion of fuel for heat, **shall not be installed in the following locations** : ❑ ❑
    1. A room used or designed to be used for sleeping purposes,
    2. A bathroom,
    3. A clothes closet, or
    4. In a closet or other confined space opening into a bathroom or bedroom.
       Exception: Direct vent water heaters.
    5. Water Heaters shall not be installed in attics or other spaces where damage may result from a leaking water heater, without installing an approved safe pan beneath the water heater with a minimum ¾ inch drain to an approved, readily visible location.

E. Installation Requirements

17. Plumbing systems shall be installed in a manner conforming to the CPC, applicable standards, and the manufacturer's installation instructions. In instances where the code, applicable standards, or the manufacturer's instructions conflict, the more stringent provisions shall prevail. (2010 CPC 310.4) ❑ ❑

18. **Expansion Tank.** Any water system provided with a check valve, backflow preventer, or any other normally closed device that prevents dissipation of building pressure back into the water main shall be provided with an approved, listed, and adequately sized expansion tank or other approved device having a similar function to control thermal expansion. (2010 CPC 608.3) ❑ ❑

    Commentary: *A check valve or other normally closed device will create a closed system which requires an expansion tank. Expansion tank is required when the water system is "closed loop" (when the water cannot move back into the water supply system). A system is considered a closed loop when a Water regulator AND OR Backflow prevention device such as the "Reduced Pressure backflow prevention device (RP) is installed. The OSHPD field staff will require an expansion tank when a check valve is visible. A qualified plumber may further determine that the system is closed at non-visible locations through the use of tools and test equipment. Items such as water meters and water softeners and regulators sometimes have built-in check valves.*

19. An approved expansion tank shall be installed in the cold water distribution piping downstream of each pressure regulator to prevent excessive pressure from developing due to thermal expansion and to maintain the pressure setting of the regulator. (2010 CPC 608.2) ❑ ❑

    Commentary: *Expansion tanks are required on installations that have a water pressure regulating device. Expansion tanks must be properly sized and pressurized in accordance to the manufacturer's instructions. Pressure in water systems is considered excessive when the pressure exceeds 80 psi. Damage can occur to water heaters and other components in the water system when they are subjected to excessive water pressure. When water is heated, it causes expansion and increased pressures in both the hot and cold water piping system. In an open system, water can only push back into the street provided that the street pressure is less than the expanding water pressure. A properly sized and installed expansion tank protects the water heater and other water system components from excessive water pressure within the range of the regulator setting and the relief valve setting. Most warranties for plumbing fixtures and water heaters become null and void when the products are subjected to excessive pressure.*

20. A shutoff valve shall not be placed between the relief valve and the water heater or on discharge pipes between such valves and the atmosphere. The hourly Btu discharge capacity of the device shall be not less than the input rating of the water heater. (2010 CPC 505.6) ❑ ❑

21. **Temperature and Pressure Relief Valves.** Relief valves located inside a building shall be provided with a drain, not smaller than the relief valve outlet, of galvanized steel, hard-drawn copper piping and fittings, CPVC or listed relief valve drain tube with fittings that will not reduce the internal bore of the pipe or tubing (straight lengths as opposed to coils) and shall extend from the valve to the outside of the building, with the end of the pipe not more than two feet nor less than six inches above ground or the flood level of the area receiving the discharge and pointing downward. Such drains shall be permitted to terminate at other approved locations. Relief valve drains shall not terminate in a ❑ ❑

The "How To Guide" Series
Companion Documents to FREER Manual

building's crawl space. No part of such drain pipe shall be trapped or subject to freezing. The terminal end of the drain pipe shall not be threaded.(2010 CPC 608.5)

22. Discharge from a relief valve into a water heater pan shall be prohibited. (2010 CPC 508.5) ❑ ❑

23. The clearances shall not be such as to interfere with combustion air, draft hood clearance and relief, and accessibility for servicing. Listed water heaters shall be installed in accordance with their listings and the manufacturer's instructions. (2010 CPC 505.3.1, 510.6.1.1) ❑ ❑

F. Gas Supply

24. *Gas connector shall be rated/sized for load/demand of the water heater, the connector shall not exceed 3' feet in length, and the existing old connector shall not be reused when replacing the water heater. DO NOT REMOVE SIZING LABLE* ❑ ❑

25. **Flexible gas supplies.** Listed flexible gas connectors shall be in compliance with CSA Z21.24, Standard for Connectors for Gas Appliances. The connector shall be used in accordance with the terms of their listing that are completely in the same room as the appliance. (2010 CPC 1212.1.3) ❑ ❑

    Note: *CSA certifies gas connectors up to 6' (72"). Joining two or more connectors is not permitted by product standards. Flexible gas connectors can only be used above ground. The gas supply outlet must be in the same room as the appliance and the connector must not be concealed within or run through any wall, floor or partition. According to the requirements of the CSA specification that governs appliance gas connectors, the connector and fittings are design for use only on the original installation and are not to be reused for another appliance or at another location.*

26. Water heaters connected to a piping system shall have an accessible, approved manual shutoff valve with a non-displaceable valve member, or a listed gas convenience outlet installed within six (6) feet (1.8 m) of the appliance it serves. Where a connector is used, the valve shall be installed upstream of the connector. 2010 CPC 1215 ❑ ❑

27. **1212.7 Sediment Trap.** Where a sediment trap is not incorporated as a part of the gas utilization appliance, a sediment trap shall be installed downstream of the appliance shutoff valve as close to the inlet of the appliance as practical at the time of appliance installation. The sediment trap shall be either a tee fitting with a capped nipple in the bottom outlet, as illustrated in **Figure 2**, or other device recognized as an effective sediment trap. (2010 CPC 1212.7) ❑ ❑

    Commentary: *A sediment trap is required at water heaters. See attached Figure 12-1 for an acceptable sediment trap design. Sediment traps help prevent debris in the gas system from clogging the inlet screen on the gas control valve and help prevent debris from damaging the control valve. Most warranties are null and void if it is determined that debris caused damage to the*

gas control valve.

28. **Unions gas lines** must be installed within 12" inches of water heater to facilitate removal. CPC 609.5 ❑ ❑

29. **Gas line air test** required when any modifications are made to gas line piping, excluding gas connector. If applicable see "Whole House Gas Test" for testing guidelines. CPC 1214.5 ❑ ❑

30. When an additional or replacement appliance is installed or an appliance is converted to gas from another fuel, the location in which the appliance is to be operated shall be checked to verify the following: (1) Air for combustion and ventilation is provided where required, in accordance with the provisions of Section 507.0. Where existing facilities are not adequate, they shall be upgraded to Section 507.0 specifications. (2) The installation components and appliances meet the clearances to combustible material. (3) It shall be determined that the installation and operation of the additional or replacement appliance does not render the remaining appliance unsafe for continued operation. (2010 CPC 508.6, 508.6.1) ❑ ❑

G. Flues

31. Vents that pass through unconditioned areas such as attic, underfloor, and unconditioned basements shall be listed Type B or Type L double wall vents. Single wall vents are not allowed. CMC 802.10.2 ❑ ❑

32. Vent connectors serving appliances vented by natural draft shall not be connected into any portion of mechanical draft systems operating under positive pressure. CMC 802.3.4.4 ❑ ❑

33. Joints between sections of connector piping and connections to flue collars or draft hood outlets shall be fastened in accordance with one of the following methods (1) By sheet metal screws. (2) Vent connectors of listed vent material shall be assembled and connected to flue collars or draft hood outlets in accordance with the manufacturer's instructions. (3) Other approved means. ❑ ❑

    Commentary: *The vent connector must be fastened to the draft hood, at each joint and to the first B-vent fitting. Three sheet metal screws or more are typically needed to hold the joint rigidly in place.*

34. Type B vents shall extend in a generally vertical direction with offsets not exceeding 45 degrees, except that a vent system having not more than one 60 degree offset shall be permitted. Any angle greater than 45 degrees from the vertical is considered horizontal. The total horizontal distance of a vent plus the horizontal vent connector serving draft-hood-equipped appliances shall not exceed 75 percent of the vertical height of the vent. (2010 CPC 510.6.1.1) ❑ ❑

35. A water heater shall be located as close as practicable to the venting system. The maximum horizontal length of a single-wall connector shall be 75 percent of the height of the chimney or vent except for engineered systems. (2010 CPC ❑ ❑

The "How To Guide" Series
Companion Documents to FREER Manual

510.10.9.2)

36. The maximum horizontal length of a Type B double-wall connector shall be 100 percent of the height of the chimney or vent, except for engineered systems. The maximum length of an individual connector for a chimney or vent system serving multiple appliances, from the appliance outlet to the junction with the common vent or another connector shall be 100 percent of the height of the chimney or vent. (2010 CPC 510.10.9.3) ❑ ❑

37. A gas vent shall terminate in accordance with one of the following: (1) Above the roof surface with a listed cap or listed roof assembly. Gas vents 12" in size or smaller with listed caps shall be permitted to be terminated in accordance with Figure 5-2, provided they are at least eight 8' from a vertical wall or similar obstruction. (2010 CPC 510.6.2) **See Figure 1.** ❑ ❑

38. A Type B or a Type L gas vent shall terminate at least five 5' in vertical height above the highest connected appliance draft hood or flue collar. (2010 CPC 510.6.2.1) ❑ ❑

39. **Bond** hot water pipe to cold water pipe to gas pipe with number 6 copper wire and approved clamps. CEC 250.4 Paragraphs 4. Gas piping shall not be used as a grounding electrode. CEC 250.52 (B)(1) CEC 250.104 (B) ❑ ❑

40. **Combustion air** is required and must be maintained per the California Plumbing Code. When located in a confined space (less than 50 cubic feet of area for each 1000 BTU rating of water heater) a upper and lower combustion air opening shall be provided within 12 inches of the top and bottom of the enclosure. Minimum size of openings shall not be less than 100 square inches per opening except that underfloor openings shall have twice the required combustion air opening. Openings shall communicate directly, or by ducts, with the outdoors or spaces that freely communicate with the outdoors. Air ducts that terminate in attic shall terminate at least 6 inches above the top of the ceiling joist and insulation and shall not be screened. CPC 507 ❑ ❑

H. Water Heater Support and Bracing Requirements

41. Water heaters shall be anchored or strapped to resist horizontal displacement due to earthquake motion (2010 CPC 508.2). For Strapping and bracing details see Attached Drawings. The attached drawings provide several methods of anchorage and bracing details as well as the minimum number of bracing locations for water heater up to 100 gallons capacity. The selected method has to be followed without any modifications. As an alternative to the bracing methods provided within this publication, several manufactured systems are available. However the number of bracing points shall not be lesser that what is specified by this publication. ❑ ❑

42. A water heater supported from the ground shall rest on level concrete or other approved base extending not less than 3" above the adjoining ground level. (2010 CPC 508.3) ❑ ❑

43 **Protection from physical damage.** Water heaters shall be located or protected so they are not subject to physical damage by a moving vehicle. ❑ ❑

Page 7 of 11

(2010 CPC 508.14.2)

Commentary: *An acceptable bollard design consists of 2"or larger schedule 40 pipe, embedded 3 feet into the ground, encased in a 12" diameter footing and filled with concrete. Flanged bollards, fastened with bolts to a concrete floor, wheel stops and elevating the water heater may also be acceptable when approved by the OSHPD.*

I. Controls

44. The installation of temperature, pressure and vacuum relief devices or combinations thereof, and automatic gas shutoff devices, shall be installed in accordance with the terms of their listings and the manufacturer's instructions. (2010 CPC 505.6) ❑ ❑

45. Each individual automatically fired water heater, in addition to the operating control used for normal water heater operation shall have a separate high temperature limit actuated combustion control that will automatically cut off the fuel supply. The temperature range of the of the high temperature limit control shall not allow a setting over 210°F. ❑ ❑

J. Electric water heaters

46. Electric water heaters are required to have a disconnect within sight of the water heater or have a breaker that is of a locking type. (See 2010 CEC 422.30 and 422.31B) ❑ ❑

Page 8 of 11

The "How To Guide" Series
Companion Documents to FREER Manual

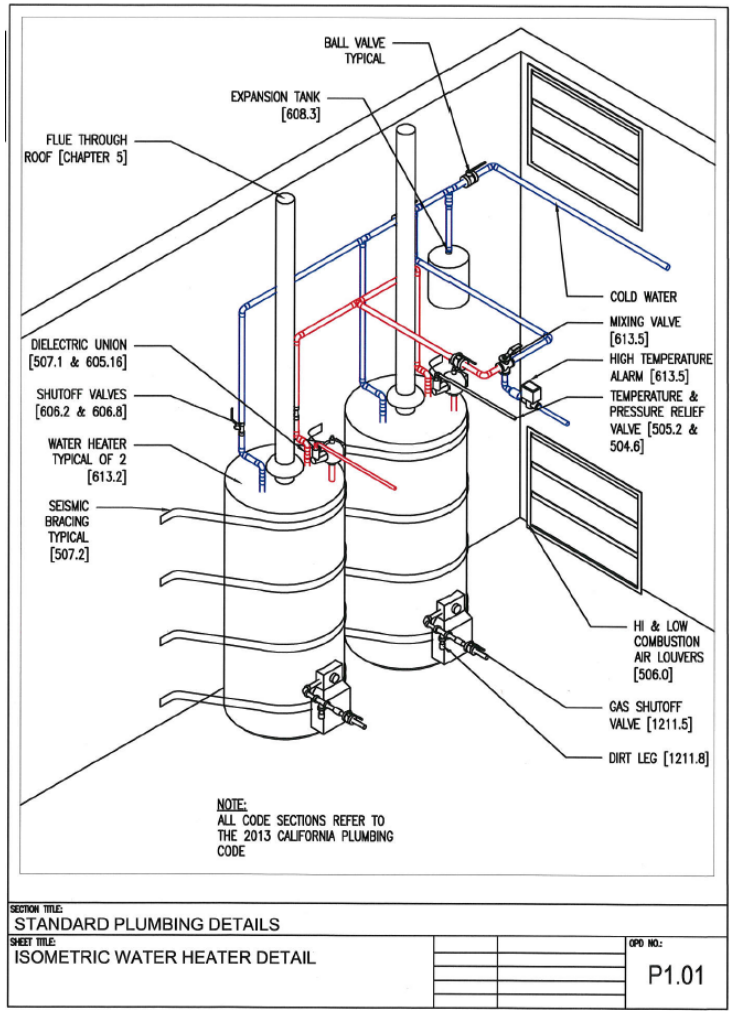

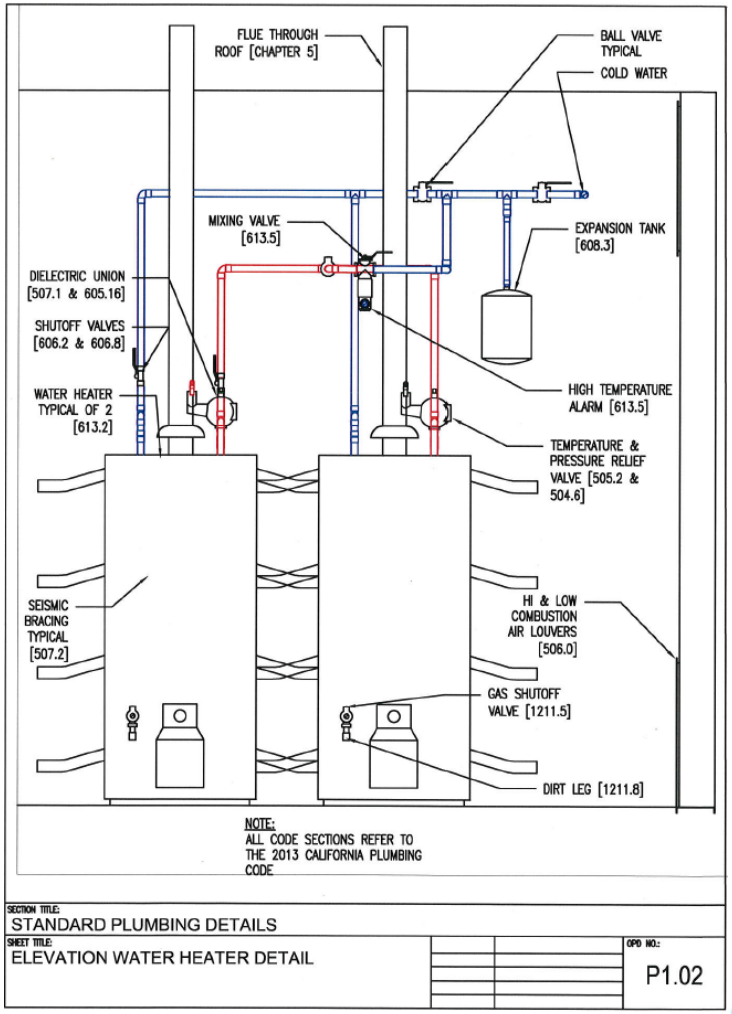

The "How To Guide" Series
Companion Documents to FREER Manual

Seismic Bracing Guide For Water Heater Replacement Projects

Seismic Bracing Using Plumbers Tape (Alternate #1)

General Notes

1. **Plumber's Tape Bracing:** This method utilizes 3/4" perforated 24 gauge steel strapping (plumber's tape) to brace the water heater at an adjacent wall.

2. These seismic bracing details do not address water heater installations in an attic or other unusual locations (such as a water heater not located adjacent to a wall). For those cases, the specific design for earthquake bracing shall be submitted to OSHPD for review and approval.

3. Lag screws must be installed into a pre-drilled pilot hole (and must be screwed in, not driven in with a hammer). A standard cut washer must be installed with the lag screw as shown.

4. Secure each length of plumber's tape at the support stud at the opposite wall with a lag screw as shown in Details A and B, and cut off any excess length of tape. Plumbers' tape shall be installed snag tight.

5. No of Bracing points:

Water Capacity	*No. of Bracing points*
52 Gallons or less	*2 sets*
52 to 75 Gallons	*3 sets spaced equaly*
75 to 100 Galons	*4 sets spaced equaly*

5. Water Heater Bracing Attachment to a Concrete or Concrete Masonry Wall. These seismic bracing details do not address water heater installations anchorage to Water Heater Bracing Attachment to a Concrete or Concrete Masonry Wall. For those cases, the specific design for earthquake bracing shall be submitted to OSHPD for review and approval.

Corner Location

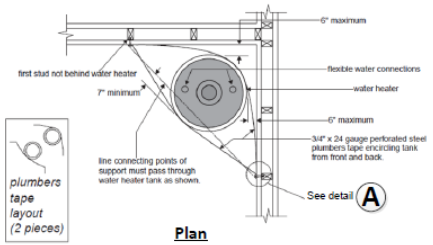

Plan

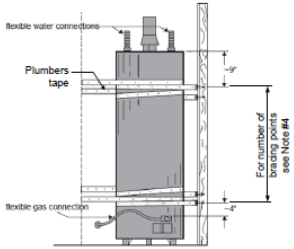

Elevation

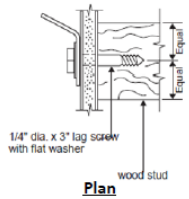

Plan
Detail A

Straight Wall

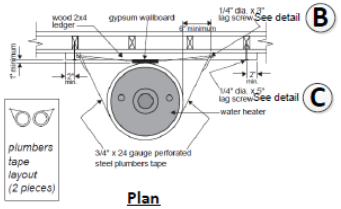

Plan

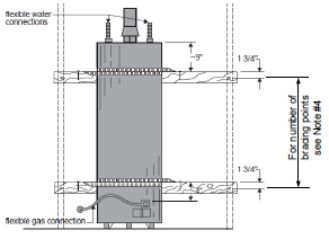

Elevation

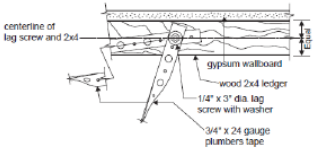

Plan
Detail B

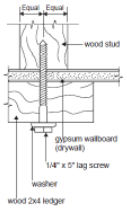

Plan
Detail C

The "How To Guide" Series
Companion Documents to FREER Manual

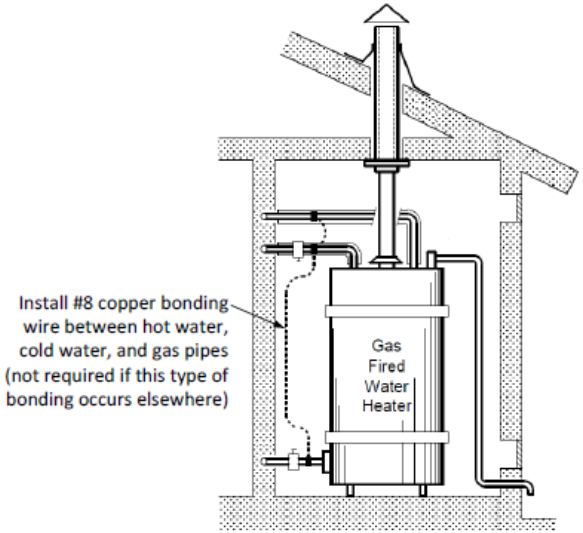

Figure 1. Water Heater Bonding

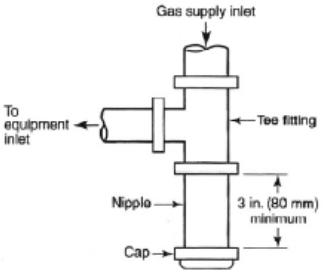

Figure 2. Sediment trap diagram 2010 CPC Figure 12-1

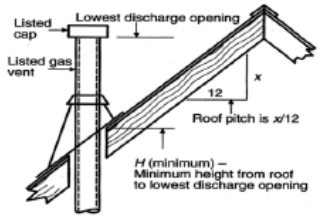

ROOF PITCH HEIGHTS

ROOF PITCH	H(minimum) ft.	m
Flat to 5/12	1.0	0.30
Over 5/12 to 7/12	1.25	0.38
Over 7/12 to 9/12	1.5	0.46
Over 9/12 to 3/12	2.0	0.61
Over 3/12 to 19/12	2.5	0.76
Over 19/12 to 11/12	3.25	0.99
Over 11/12 to 13/12	4.0	1.22
Over 13/12 to 14/12	5.0	1.52
Over 14/12 to 16/12	6.0	1.83
Over 16/12 to 18/12	7.0	2.13
Over 18/12 to 20/12	7.5	2.27
Over 20/12 to 21/12	8.0	2.44

Figure 3. GAS VENT TERMINATION LOCATIONS FOR LISTED CAPS 12 1NCH (300 MM) OR LESS IN S IZE NOT LESS THAN 8 FEET (2.4 m) FROM A VERTICAL WALL [NFPA 54: FIGURE 12.7.2 AND TABLE 12.7.2]

The Reason for the "How To Guide"

FDD's Operational/Strategic Planning

Objectives and Opportunities:

FDD's Top 3 Objectives for 2014

1. Continue to expand electronic plan review capabilities
2. Continue to expand the standard details, especially those for skilled nursing facilities
3. Continue to develop over-the-counter/computer capabilities and opportunities

OTCs

Offices:

Sacramento Office			Los Angeles (L.A.) Office	
Tuesdays	North Region	Click here to schedule an OTC Review w/the North Region.	North L.A. Region	Click here to schedule an OTC Review w/the North L.A. Region.
Wednesdays	Coastal Region	Click here to schedule an OTC Review w/the Coastal Region.	South L.A. Region	Click here to schedule an OTC Review w/the South L.A. Region.
Thursdays	Central Region	Click here to schedule an OTC Review w/the Central Region	South Region	Click her to schedule an OTC Review w/the South Region

Off-site Locations:

San Diego: 3rd Monday and Tuesday, Monthly

Santa Rosa State Building	Fresno CalFire Headquarters
2nd & 4th Tuesdays, Monthly	1st and 3rd Wednesday, Monthly*

*Starting April 2nd

Over-the-Computer Reviews

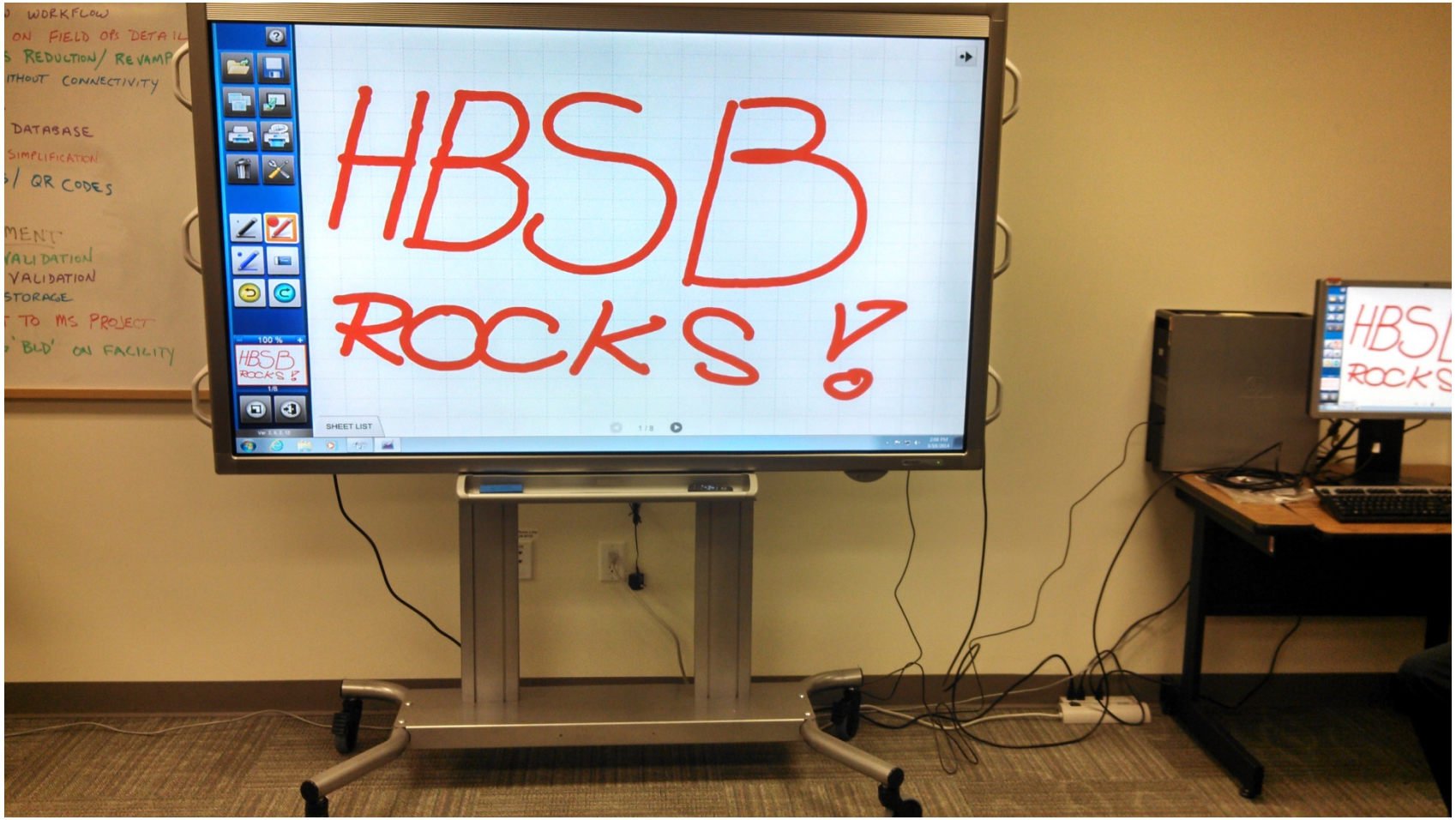

This page left intentionally blank.

Facilities Development Division

California's Building Department for Hospitals

Roy Lobo, Ph.D., S.E., Principal Structural Engineer
Hussain Bhatia, Ph.D., S.E., Supervisor, Seismic Compliance Unit
Brett Beekman, S.E., Senior structural Engineer

SB 499 Update for the Hospital Building Safety Board
March 12, 2014

Preliminary 2013 SB 499 Hospitals' Reports Summary

This preliminary summary is based on data reported by the hospitals to OSHPD as required by the SB 499 reports due on November 1, 2013. The information and data used to generate this summary are subject to change without notice.

Compliance Timeline	Number of Hospitals	Number of SPC-1 Buildings
By January 1, 2014	9	35
Between January 1, 2014 to January 1, 2015	56	145
Between January 1, 2015 to January 1, 2018	32	77
Between January 1, 2018 to January 1, 2020	61	154

- The compliance timeline for SPC-1 buildings is self-reported by the hospitals and does not automatically make a hospital eligible for an extension to the compliance date reported.
- To be eligible for an extension, a hospital must meet the initial eligibility criteria and maintain its eligibility by complying with subsequent milestones and requirements.

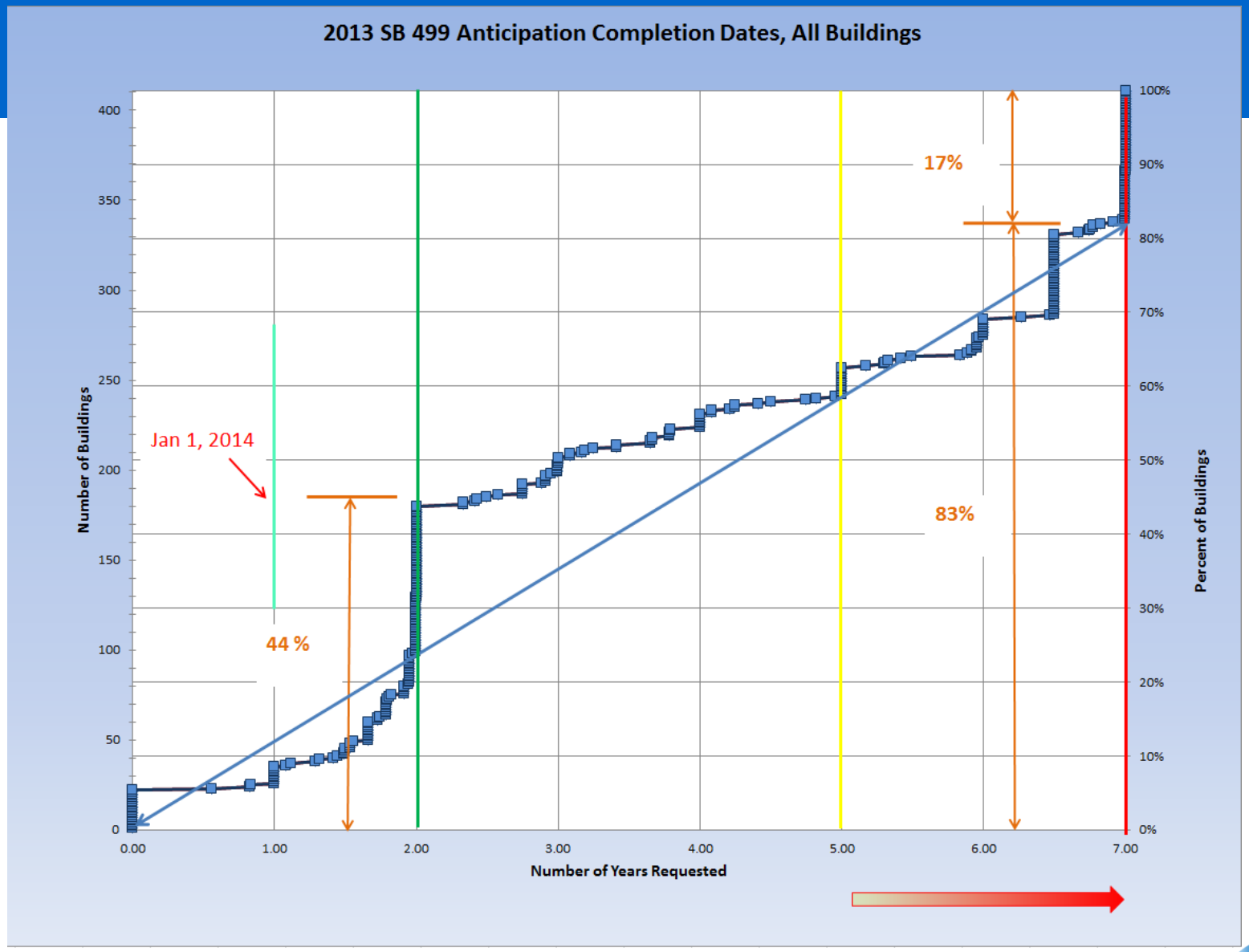
2013 SB 499 Anticipation Completion Dates, All Buildings
Number of Buildings
Percent of Buildings
Number of Years Requested
Jan 1, 2014
44 %
83%
17%
0
50
100
150
200
250
300
350
400
0%
10%
20%
30%
40%
50%
60%
70%
80%
90%
100%
0.00
1.00
2.00
3.00
4.00
5.00
6.00
7.00

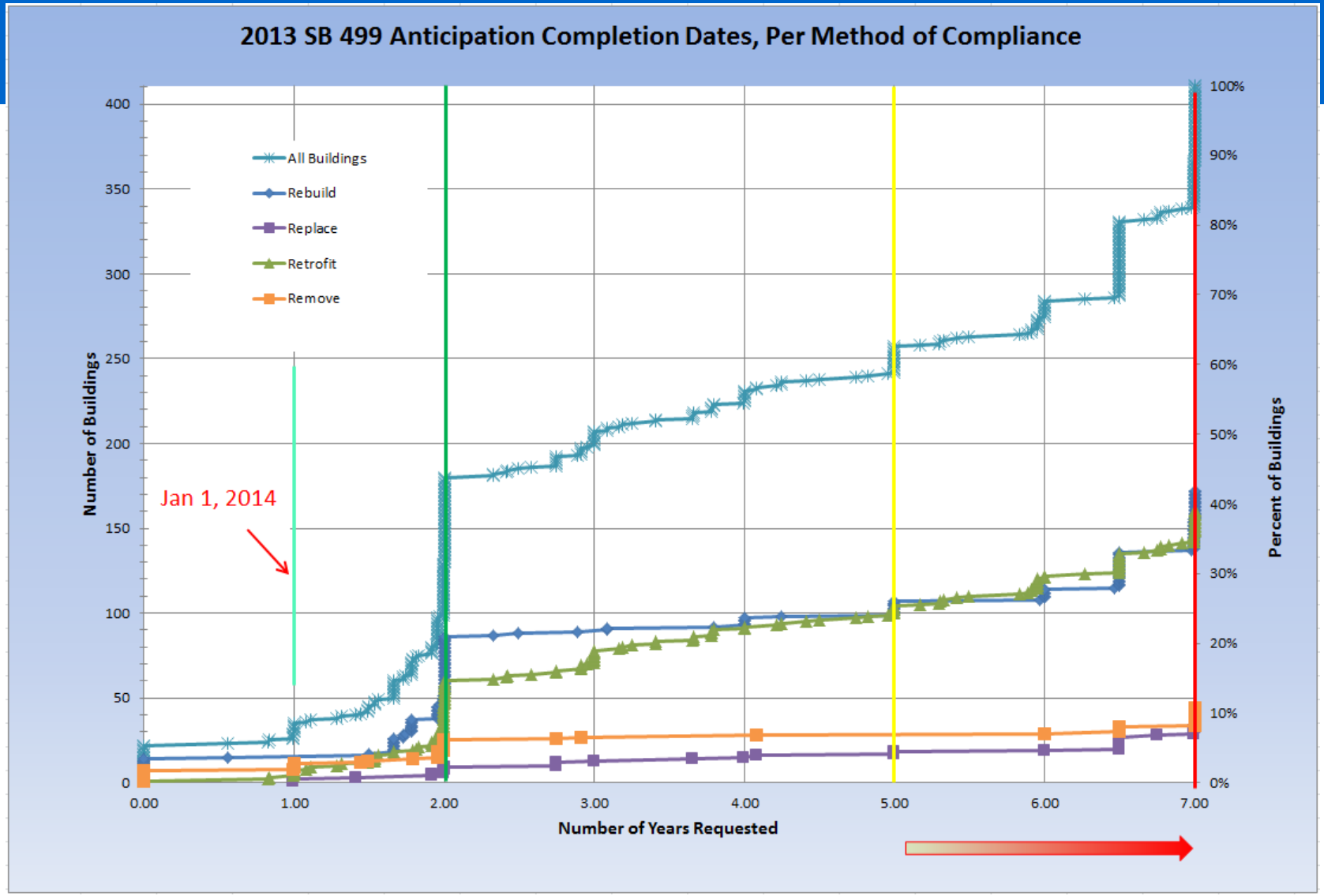
2013 SB 499 Anticipation Completion Dates, Per Method of Compliance
All Buildings
Rebuild
Replace
Retrofit
Remove
Jan 1, 2014
Number of Buildings
Percent of Buildings
Number of Years Requested
0
50
100
150
200
250
300
350
400
0%
10%
20%
30%
40%
50%
60%
70%
80%
90%
100%
0.00
1.00
2.00
3.00
4.00
5.00
6.00
7.00

Method of Compliance for Facilities as reported from SB 499 reports to comply by Jan 1, 2014; Total = 9

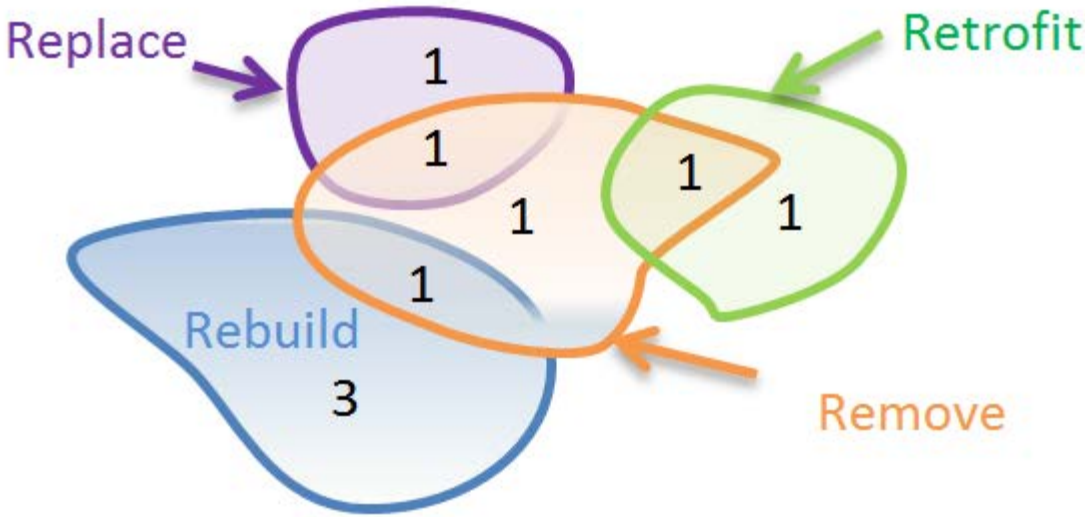

	Rebuild	Replace	Retrofit	Remove
Rebuild	4	0	0	1
Replace	0	2	0	1
Retrofit	0	0	2	1
Remove	1	1	1	4

Method of Compliance for Facilities as reported from SB 499 reports to comply between 2014 & 2015 Total = 56

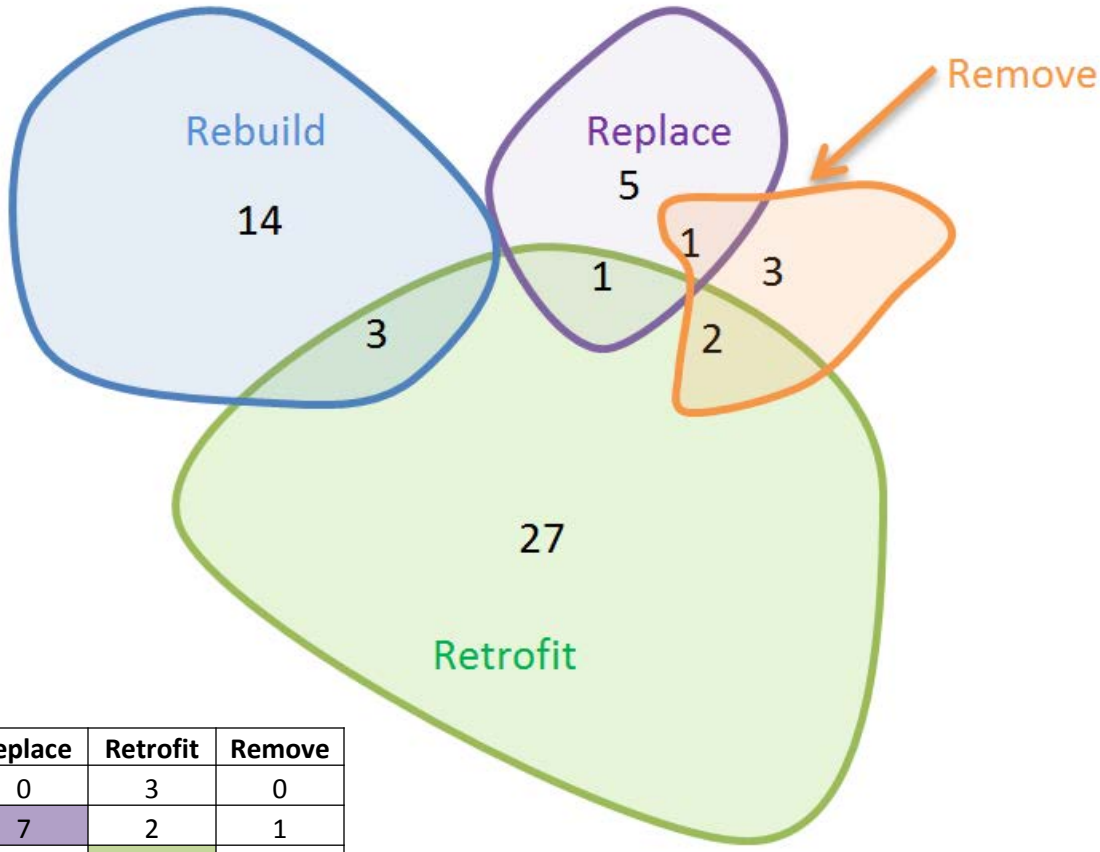

	Rebuild	Replace	Retrofit	Remove
Rebuild	17	0	3	0
Replace	0	7	2	1
Retrofit	3	2	33	2
Remove	0	1	2	6

Method of Compliance for Facilities as reported from SB 499 reports to comply between 2015 & 2018; Total = 32

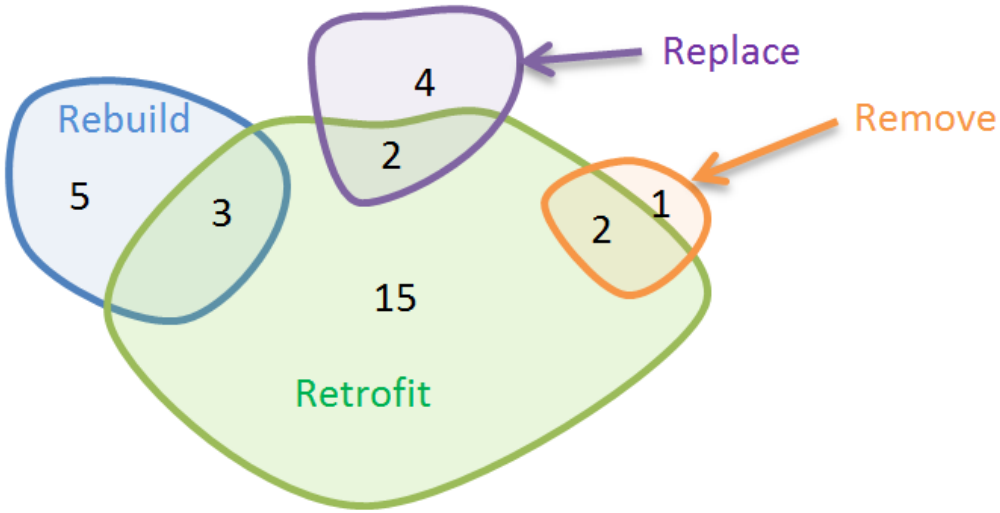

	Rebuild	Replace	Retrofit	Remove
Rebuild	8	0	3	0
Replace	0	6	2	0
Retrofit	3	2	22	2
Remove	0	0	2	3

Method of Compliance for Facilities as reported from SB 499 reports to comply between 2018 & 2020; Total = 61

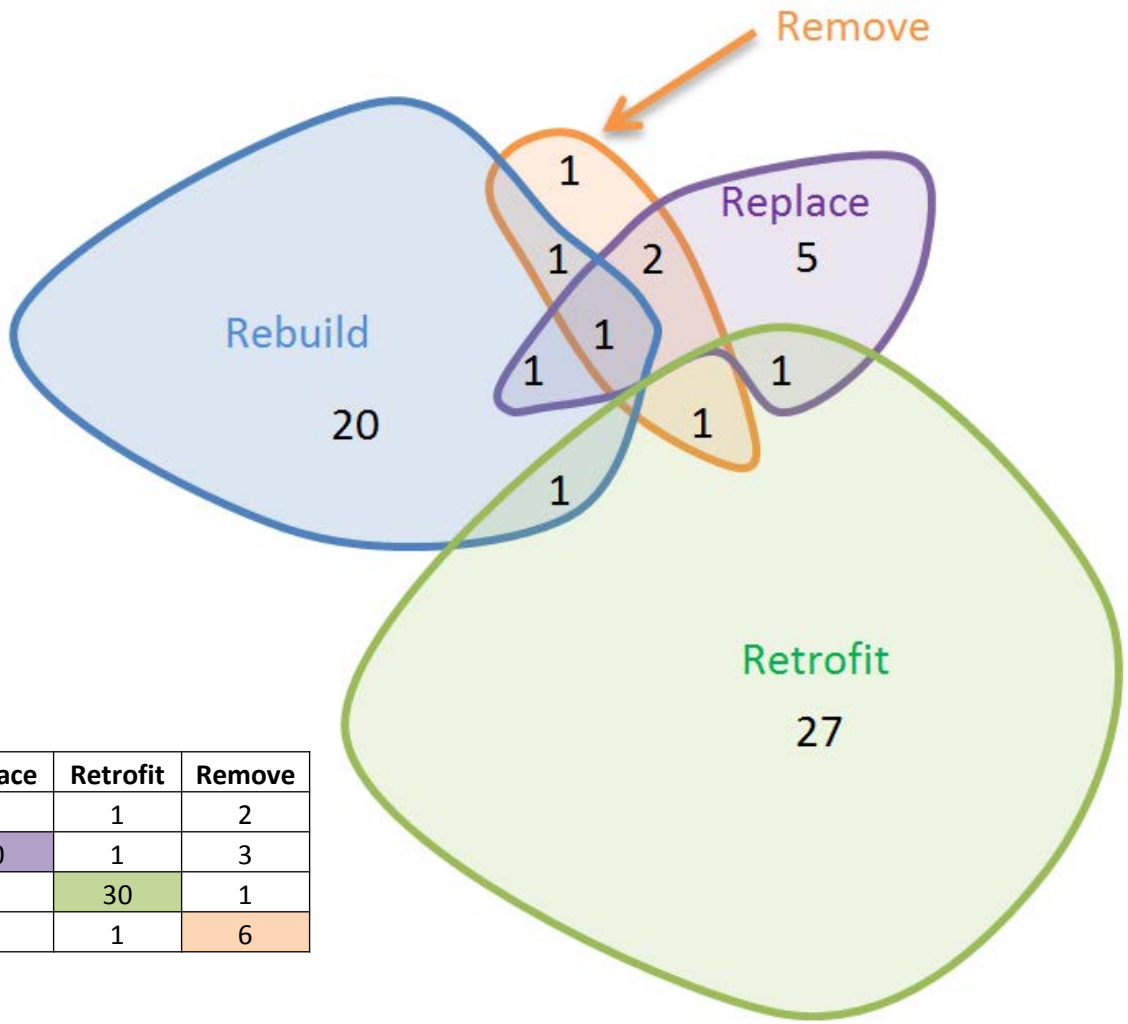

	Rebuild	Replace	Retrofit	Remove
Rebuild	24	2	1	2
Replace	2	10	1	3
Retrofit	1	1	30	1
Remove	2	3	1	6

Building Resolution from SB 499 Reports, All Buildings

SB 499 report Method of Compliance	No. of SPC-1 Buildings, (All Buildings)				
	SB 499 Anticipated Completion Dates				
	2014	2015	2018	2020	Total
Rebuild	15	71	21	65	172
Replace	2	7	9	16	34
Retrofit	7	53	44	57	161
Remove	11	14	3	16	44
Total	35	145	77	154	411

SB 499 report Method of Compliance	Facilities w/SPC-1 Buildings (All Buildings)				
	SB 499 Anticipated Completion Dates				
	2014	2015	2018	2020	Total
Rebuild	6	18	7	24	55
Replace	2	7	7	10	26
Retrofit	3	33	23	30	89
Remove	6	8	3	6	23
Total	17	66	40	70	193

Adventist Health

SB 499 report Method of Compliance	No. of SPC-1 Buildings, (Adventist)				
	SB 499 Anticipated Completion Dates				
	2014	2015	2018	2020	Total
Rebuild	0	9	0	0	9
Replace	0	0	0	0	0
Retrofit	0	0	0	0	0
Remove	0	1	0	0	1
Total	0	10	0	0	10

SB 499 report Method of Compliance	Facilities w/SPC-1 Buildings (Adventist)				
	SB 499 Anticipated Completion Dates				
	2014	2015	2018	2020	Total
Rebuild	0	2	0	0	2
Replace	0	0	0	0	0
Retrofit	0	0	0	0	0
Remove	0	1	0	0	1
Total	0	3	0	0	3

Dignity Health

SB 499 report Method of Compliance	No. of SPC-1 Buildings, (Dignity) SB 499 Anticipated Completion Dates				
	2014	2015	2018	2020	Total
Rebuild	0	1	0	2	3
Replace	1	1	1	1	4
Retrofit	2	7	0	4	13
Remove	1	7	0	1	9
Total	**4**	**16**	**1**	**8**	**29**

SB 499 report Method of Compliance	Facilities w/SPC-1 Buildings (Dignity) SB 499 Anticipated Completion Dates				
	2014	2015	2018	2020	Total
Rebuild	0	1	0	2	3
Replace	1	1	1	1	4
Retrofit	1	5	0	2	8
Remove	1	4	0	1	6
Total	**3**	**11**	**1**	**6**	**21**

Kaiser

SB 499 report Method of Compliance	No. of SPC-1 Buildings, (Kaiser)				
	SB 499 Anticipated Completion Dates				
	2014	2015	2018	2020	Total
Rebuild	1	32	0	1	34
Replace	0	0	0	0	0
Retrofit	0	0	0	0	0
Remove	0	0	0	0	0
Total	**1**	**32**	**0**	**1**	**34**

SB 499 report Method of Compliance	Facilities w/SPC-1 Buildings (Kaiser)				
	SB 499 Anticipated Completion Dates				
	2014	2015	2018	2020	Total
Rebuild	1	5	0	1	7
Replace	0	0	0	0	0
Retrofit	0	0	0	0	0
Remove	0	0	0	0	0
Total	**1**	**5**	**0**	**1**	**7**

Sutter Health

SB 499 report Method of Compliance	No. of SPC-1 Buildings, (Sutter) SB 499 Anticipated Completion Dates				
	2014	2015	2018	2020	Total
Rebuild	0	16	0	12	28
Replace	0	0	0	0	0
Retrofit	1	0	0	5	6
Remove	4	5	0	0	9
Total	5	21	0	17	43

SB 499 report Method of Compliance	Facilities w/SPC-1 Buildings (Sutter) SB 499 Anticipated Completion Dates				
	2014	2015	2018	2020	Total
Rebuild	0	2	0	4	6
Replace	0	0	0	0	0
Retrofit	1	0	0	1	2
Remove	2	2	0	0	4
Total	3	4	0	5	12

University of California

SB 499 report Method of Compliance	No. of SPC-1 Buildings, (UC)				
	SB 499 Anticipated Completion Dates				
	2014	2015	2018	2020	Total
Rebuild	0	0	0	0	0
Replace	0	0	1	1	2
Retrofit	0	2	0	0	2
Remove	0	0	0	0	0
Total	0	2	1	1	4

SB 499 report Method of Compliance	Facilities w/SPC-1 Buildings (UC)				
	SB 499 Anticipated Completion Dates				
	2014	2015	2018	2020	Total
Rebuild	0	0	0	0	0
Replace	0	0	1	1	2
Retrofit	0	1	0	0	1
Remove	0	0	0	0	0
Total	0	1	1	1	3

Unaffiliated

SB 499 report Method of Compliance	No. of SPC-1 Buildings, (Unaffiliated)				
	SB 499 Anticipated Completion Dates				
	2014	2015	2018	2020	Total
Rebuild	14	5	17	17	53
Replace	1	3	7	6	17
Retrofit	3	21	23	28	75
Remove	4	1	2	12	19
Total	22	30	49	63	164

SB 499 report Method of Compliance	Facilities w/SPC-1 Buildings (Unaffiliated)				
	SB 499 Anticipated Completion Dates				
	2014	2015	2018	2020	Total
Rebuild	5	4	5	7	21
Replace	1	3	5	5	14
Retrofit	1	11	11	13	36
Remove	2	1	2	4	9
Total	9	19	23	29	80

Investor

SB 499 report Method of Compliance	No. of SPC-1 Buildings, (Unaffiliated)				
	SB 499 Anticipated Completion Dates				
	2014	2015	2018	2020	Total
Rebuild	14	5	17	17	53
Replace	1	3	7	6	17
Retrofit	3	21	23	28	75
Remove	4	1	2	12	19
Total	**22**	**30**	**49**	**63**	**164**

SB 499 report Method of Compliance	Facilities w/SPC-1 Buildings (Unaffiliated)				
	SB 499 Anticipated Completion Dates				
	2014	2015	2018	2020	Total
Rebuild	5	4	5	7	21
Replace	1	3	5	5	14
Retrofit	1	11	11	13	36
Remove	2	1	2	4	9
Total	**9**	**19**	**23**	**29**	**80**

Non-Profit

SB 499 report Method of Compliance	No. of SPC-1 Buildings (Non-Profit)				
	SB 499 Anticipated Completion Dates				
	2014	2015	2018	2020	Total
Rebuild	8	69	10	37	124
Replace	2	2	3	11	18
Retrofit	5	26	16	22	69
Remove	7	13	2	15	37
Total	22	110	31	85	248

SB 499 report Method of Compliance	Facilities w/SPC-1 Buildings (Non-Profit)				
	SB 499 Anticipated Completion Dates				
	2014	2015	2018	2020	Total
Rebuild	2	17	3	17	39
Replace	2	2	2	6	12
Retrofit	2	16	8	11	37
Remove	4	7	2	5	18
Total	10	42	15	39	106

City/County/District

SB 499 report Method of Compliance	SPC-1 Buildings (City/County/District)				
	SB 499 Anticipated Completion Dates				
	2014	2015	2018	2020	Total
Rebuild	7	0	11	27	45
Replace	0	2	3	3	8
Retrofit	2	4	10	12	28
Remove	2	0	1	1	4
Total	**11**	**6**	**25**	**43**	**85**

SB 499 report Method of Compliance	Fac w/SPC-1 Bldgs (City/County/District)				
	SB 499 Anticipated Completion Dates				
	2014	2015	2018	2020	Total
Rebuild	4	0	4	6	14
Replace	0	2	3	2	7
Retrofit	1	2	5	5	13
Remove	1	0	1	1	3
Total	**6**	**4**	**13**	**14**	**37**

Anticipated Compliance by in years from Jan 1, 2013

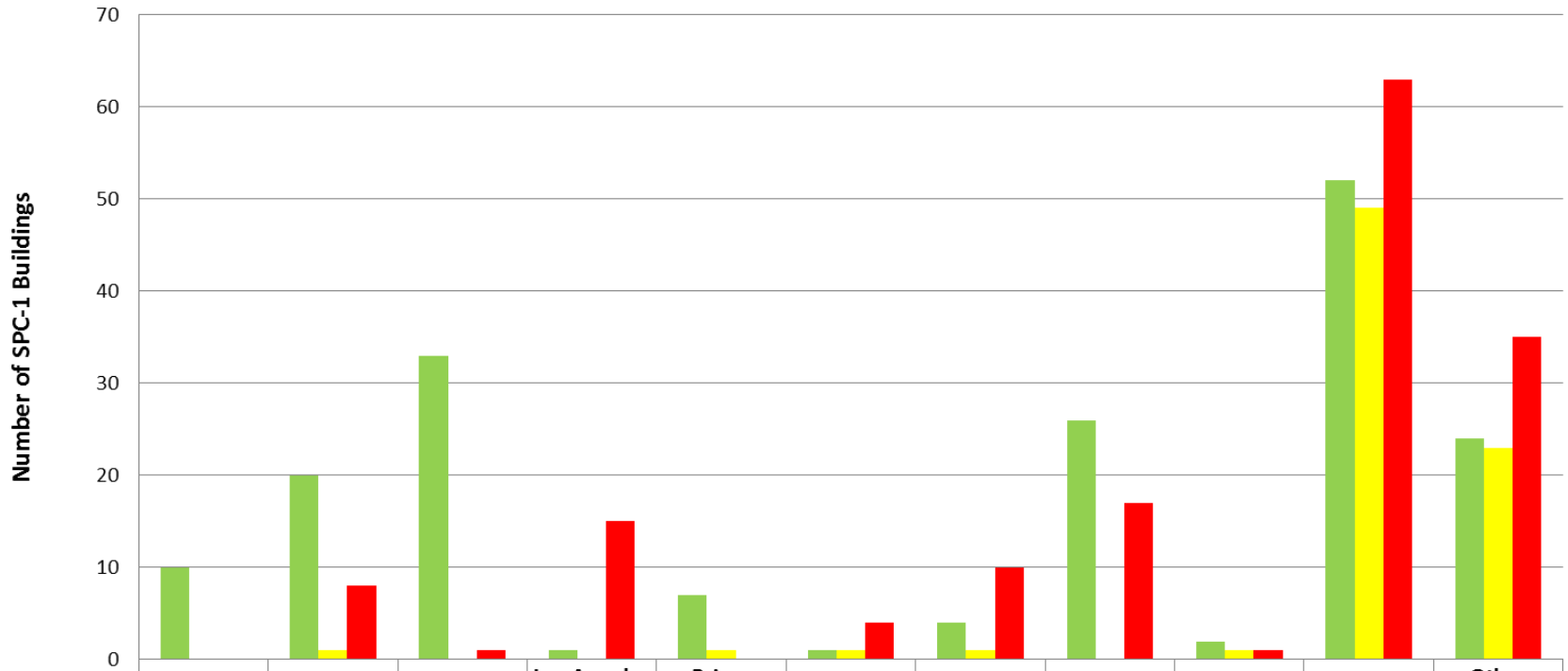

	Adventist	Dignity	Kaiser	Los Angeles County	Prime Healthcare	Providence	St. Joseph's	Sutter	UC	Unaffiliated	Other Chains
<= 2 yrs	10	20	33	1	7	1	4	26	2	52	24
2- 5 yrs	0	1	0	0	1	1	1	0	1	49	23
>5 - 7 Yrs	0	8	1	15	0	4	10	17	1	63	35

Compliance Method per Chain

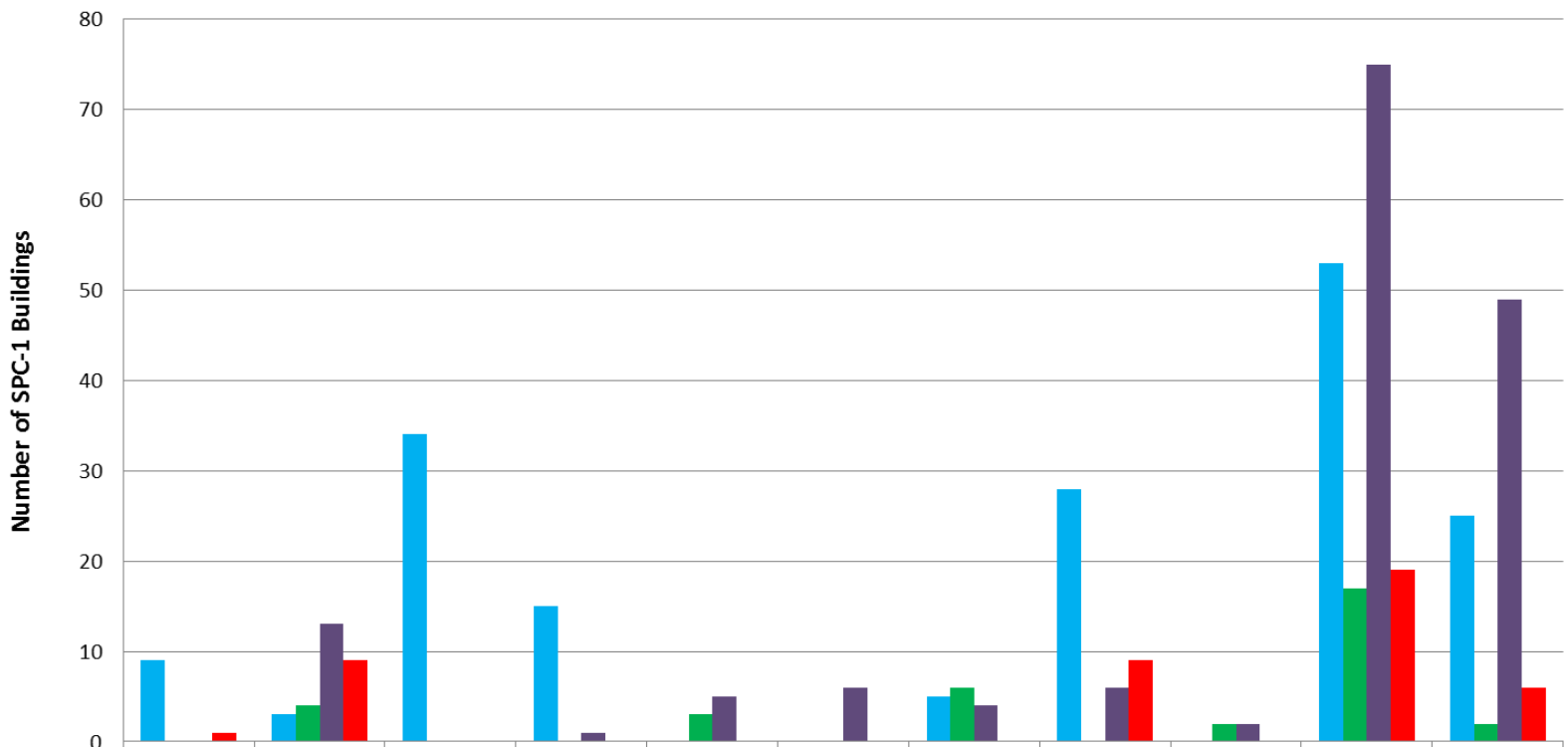

	Adventist	Dignity	Kaiser	Los Angeles County	Prime Healthcare	Providence	St. Joseph's	Sutter	UC	Unaffiliated	Other Chains
Rebuild	9	3	34	15	0	0	5	28	0	53	25
Replace	0	4	0	0	3	0	6	0	2	17	2
Retrofit	0	13	0	1	5	6	4	6	2	75	49
Remove	1	9	0	0	0	0	0	9	0	19	6

Comparison between SB 499 and SB 90 Data

Method of Compliance for SPC-1 Building

	SB 90	SB 499 Online Report				
SB 90		Rebuild	Replace	Retrofit	Remove	% Difference
Rebuild	**69**	61	6	2	0	11.6%
Replace	**43**	12	17	2	12	60.5%
Retrofit	**154**	7	3	134	10	13.0%
Remove	**6**	2	1	1	2	66.7%
Total	**272**	**82**	**27**	**139**	**24**	
% Difference Overall		18.8%	37.2%	9.7%	300.0%	

Anticipated Completion Dates for SPC-1 Building

	SB 90	SB 499 Online Report			%
SB 90		< 2 years	2 - 5 years	5 - 7 years	Difference
< 2 Years	**48**	43	3	2	10.4%
2 - 5 years	**96**	25	53	22	44.8%
5 - 7 years	**130**	22	12	101	22.3%
Total	**274**	**90**	**68**	**125**	
% Difference Overall		87.5%	29.2%	3.8%	

Service Comparison, SB 499 vs SB 90

Buildings with Service Discrepancies = 159

Buildings with all Services Matching = 115

Comparison between 2013 and 2012, SB 499 reports

Method of Compliance for SPC-1 Building

	2012 reports	SB 499 - 2013 Online Report				
2012 Reports		Rebuild	Replace	Retrofit	Remove	% Difference
Rebuild	**152**	135	13	3	1	11.2%
Replace	**41**	19	13	5	4	68.3%
Retrofit	**164**	8	2	143	11	12.8%
Remove	**47**	8	6	6	27	42.6%
Total	**404**	**170**	**34**	**157**	**43**	
% Difference Overall		11.8%	17.1%	4.3%	8.5%	

Buildings with Projects from 2013, SB 499 reports

	SB 90	Projects	SB 499	Projects
Rebuild	**69**	52	**172**	151
Replace	**43**	25	**34**	18
Retrofit	**154**	68	**161**	91
Remove	**6**	2	**44**	20
	272	147	411	280

This page left intentionally blank.

July 1, 2015 Effective Date

2013 Intervening Code Cycle

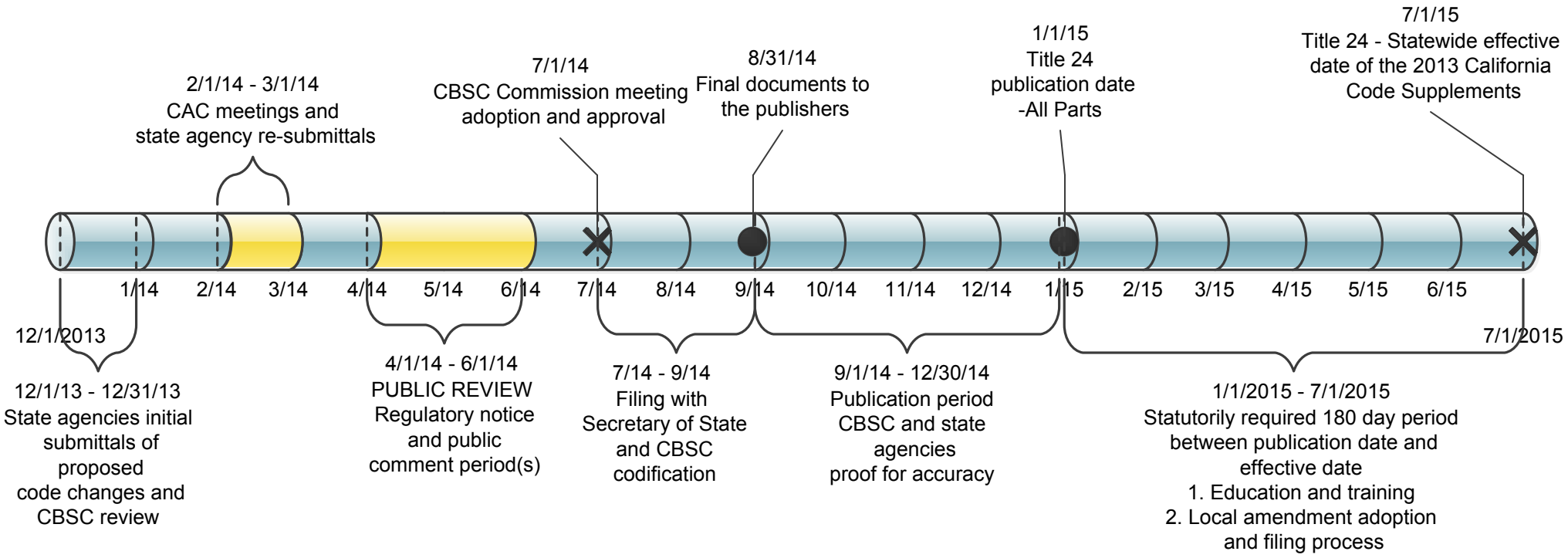

CAC Committees:
SDLF – Structural Design/ Lateral Forces
PEME – Plumbing, Electrical, Mechanical & Energy
HF – Health Facilities
GREEN – Green Building
BFO – Building, Fire & Other
ACCESS – Accessibility

*** All dates are subject to change**

This page left intentionally blank.

You are here > Calendar (http://www.bsc.ca.gov/calendar.aspx) > Code Advisory Committee Meetings (http://www.bsc.ca.gov/calendar/cacmtgs.aspx)

Code Advisory Committee Meetings

2013 Code Advisory Committee Review

Accessibility Committee (ACCESS)
February 26-27, 2014
Meeting Notice/Agenda (*forthcoming*)

Green Building Standards Committee (GREEN)
March 13, 2014
Meeting Notice/Agenda (*forthcoming*)

Ad Hoc Committee (Combined PEME, BFO, SD/LF, HF members as selected by the Commission)
March 18-19, 2014
Meeting Notice/Agenda (*forthcoming*)

2012 Code Advisory Committee Review

Structural Design/Lateral Forces Committee (SD/LF)
July 17, 2012 (PDF (http://www.documents.dgs.ca.gov/bsc/prpsd_chngs/2012/SDLF/SDLF-CAC-Notice-7-17-12-Final.pdf)) (WORD (http://www.documents.dgs.ca.gov/bsc/prpsd_chngs/2012/SDLF/SDLF-CAC-Notice-7-17-12-Final.doc))

Plumbing, Electrical, Mechanical & Energy (PEME)
Tuesday & Wednesday, July 24 & 25, 2012 (PDF (http://www.documents.dgs.ca.gov/bsc/prpsd_chngs/2012/PEME/PEME-CAC-Notice-7-24-25-12-Meeting-Final.pdf)) (WORD (http://www.documents.dgs.ca.gov/bsc/prpsd_chngs/2012/PEME/PEME-CAC-Notice-7-24-25-12-Meeting-Final.doc))

Health Facilities (HF)
Wednesday, August 1, 2012 (PDF (http://www.documents.dgs.ca.gov/bsc/prpsd_chngs/2012/HF/HF-CAC-Notice-8-1-12-Meeting.pdf)) (DOC (http://www.documents.dgs.ca.gov/bsc/prpsd_chngs/2012/HF/HF-CAC-Notice-8-1-12-Meeting.doc))

Green Building (GREEN)
Wednesday, August 8, 2012 (PDF (http://www.documents.dgs.ca.gov/bsc/prpsd_chngs/2012/GREEN/GREEN-CAC-Notice-8-8-12-Meeting.pdf)) (DOC (http://www.documents.dgs.ca.gov/bsc/prpsd_chngs/2012/GREEN/GREEN-CAC-Notice-8-8-12-Meeting.DOC))

Building, Fire & Other (BFO)
Tuesday, August 14, 2012 (PDF (http://www.documents.dgs.ca.gov/bsc/prpsd_chngs/2012/BFO/BFO-CAC-REVNotice-8-14-12-MeetingFinal.pdf)) (DOC (http://www.documents.dgs.ca.gov/bsc/prpsd_chngs/2012/BFO/BFO-CAC-REVNotice-8-14-12-MeetingFinal.DOC)) **REVISED**
Teleconference number: 1-877-953-8408; Participant code: 3177657

Accessibility (ACCESS)
Tuesday, Wednesday & Thursday, September 25-27, 2012 (PDF (http://www.documents.dgs.ca.gov/bsc/prpsd_chngs/2012/ACCESS/ACCESS-CAC-REV-Notice-9-25-27-12-Meeting.pdf)) (DOC (http://www.documents.dgs.ca.gov/bsc/prpsd_chngs/2012/ACCESS/ACCESS-CAC-REV-Notice-9-25-27-12-Meeting.doc)) **REVISED**
Teleconference number: 1-888-622-5357; Participant code: 201321

EXPRESS TERMS
FOR
PROPOSED BUILDING STANDARDS
OF THE
OFFICE OF STATEWIDE HEALTH PLANNING AND DEVELOPMENT

REGARDING PROPOSED CHANGES TO
CALIFORNIA BUILDING CODE
CALIFORNIA CODE OF REGULATIONS, TITLE 24, PART 2, VOLUME 1

LEGEND FOR EXPRESS TERMS
1. Existing California amendments or code language being modified are in italics when they appear in the model code text: All such language appears in *italics*, modified language is underlined.
2. New California amendments: All such language appears *underlined and in italics*.
3. Repealed text: All such language appears in ~~strikeout~~.

EXPRESS TERMS

CHAPTER 12 INTERIOR ENVIRONMENT

SECTION 1224 [OSHPD 1]
HOSPITALS

1224.3 Definitions.

…

ANGIOGRAPHY. *The radiographic visualization of blood vessels following introduction of contrast material for purposes of diagnosis.*

…

GENERAL ACUTE-CARE HOSPITAL. *A hospital, licensed by the ~~Department of Health Services~~ California Department of Public Health, having a duly constituted governing body with overall administrative and professional responsibility and an organized medical staff which provides 24-hour inpatient care, including the basic services.*

HANDWASHING ~~FIXTURE~~ STATION. *An area that provides a handwashing fixture, cleansing agents and means for drying hands. Refer to the California Plumbing Code, Section 210.0 for the definition of handwashing fixture.*

…

SCRUB SINK. *A sink used to wash and scrub the hands and arms during the aseptic preparation for surgery, and equipped with a supply spout and controls as required for a handwashing fixture. Refer to the California Plumbing Code Sections 210.0 and 221.0.*

…

1224.4 GENERAL CONSTRUCTION

…

1224.4.4 Support areas for patients.

1224.4.4.1 Examination and treatment rooms.

1224.4.4.1.1 Examination ~~or treatment~~ room. *Unless specified elsewhere, if ~~a treatment room or~~ an exam room is provided, it shall have a minimum clear floor area of 80 square feet (7.4 m^2),*

the least dimension of which shall be 8 feet (2438 mm). The room shall contain a handwashing fixture and a counter or shelf space for writing or electronic documentation.

1224.4.4.1.2 Treatment room. *Unless specified elsewhere, if a treatment room is provided, it shall have a minimum clear floor area of 120 square feet (11.15 m^2), the least dimension of which shall be 10 feet (3048 mm). A minimum of 3 feet (914 mm) is required between the sides and foot of the bed/gurney/table and any wall or other fixed obstruction. The room shall contain an examination light, work counter for medical equipment, a handwashing fixture, cabinets, medication storage and counter space for writing or electronic documentation. Multi-bed treatment rooms shall have separate patient cubicles with a minimum clear floor area of 80 square feet (7.4 m^2) per cubicle. Each cubicle shall contain an examination light, counter and storage facilities, In multi-bed treatment rooms, a handwashing fixture shall be provided in the room for each three or fewer cubicles.*

1224.4.4.1.~~1~~ 3 Airborne infection isolation exam/treatment room*. …*

1224.4.4.1.~~1.1~~ 3.1 Airborne infection isolation exam/treatment anteroom. *…*

1224.14 NURSING SERVICE SPACE

1224.14.1 Patient rooms.

1224.14.1.1 *…*

1224.14.1.2 Space requirements. *In new construction, patient rooms shall have a minimum of 100 square feet (9.29 m^2) or clear floor area per bed in multiple-bed rooms and 120 square feet (11.15 m^2) of clear floor area for single-bed rooms. The dimensions and arrangement of rooms shall be such that there is a minimum of 3 feet (914 mm) between the sides and foot of the bed and any wall or any other fixed obstruction. In multiple-bed rooms, a minimum clearance of 3 feet (914 mm) shall be provided between beds and a clearance of 4 feet (1219 mm) shall be available at the foot of each bed to permit the passage of equipment and beds.*

…

1224.14.1.9 Privacy. *A method of assuring visual privacy for each patient shall be maintained in patient rooms and in tub, shower and toilet rooms. Windows or doors within a normal sightline that would permit observation into the room shall be arranged or curtained as necessary for patient privacy. In multiple-bed rooms, visual privacy from casual observation by other patients and visitors shall be provided for each patient. The design for privacy shall not restrict patient access to the entrance, lavatory or toilet room.*

…

1224.15 Surgical service space. *…*

1224.15.3 Service areas. *Services, except for the enclosed soiled workroom referenced in Section 1224.15.3.7 and the housekeeping room referenced in Section 1224.15.3.12, ~~. Housekeeping room~~ may be shared with the obstetrical facilities. Service areas, when shared with delivery rooms, shall be designed to avoid the passing of patients or staff between the operating room and the delivery room areas. The following shall be provided in support of the surgical service space:*

…

1224.18 RADIOLOGICAL/DIAGNOSTIC IMAGING SERVICE SPACE

…

1224.18.2 Angiography. *If provided, diagnostic angiography space shall accommodate the following:*

1. *A control room with a view window to permit full view of the patient.*
2. *A scrub sink located outside the staff entry to the procedure room.*
3. *Patient holding area shall accommodate at least one patient gurney with a minimum of 3-foot (~~1524~~ 914 mm) clearance on the long side.*

4. Storage for portable equipment and catheters shall be provided.

1224.18.2.1 ~~Surgery~~ Interventional angiography procedures. *If ~~surgery is~~ interventional angiography procedures are to be performed in the angiography room, the ~~room~~ suite must comply with general operating room requirements in Section 1224.15.1.1 and have the support of the service areas in Section 1224.15.3. If cardiac catheterization procedures are performed refer to Section 1224.28.*

1224.18.3 Computerized tomography (CT) scanning. *…*

1224.18.3.1 Spaces required. *If provided, CT scan spaces shall accommodate the equipment with a minimum of 3 feet (~~1524~~ 914 mm) on all sides of the equipment, together with the following:*

…

1224.18.4 Magnetic resonance imaging (MRI). *If provided, the MRI room shall accommodate the equipment with a minimum of 3 feet (~~1524~~ 914 mm) on all sides of the equipment, together with the following:*

…

1224.18.5 Ultrasound. *…*

1224.18.5.1 *…*

1224.18.5.2 *…*

1224.18.5.3 Patient toilet(s). *A patient toilet shall be directly accessible to the ultrasound procedure room. The patient toilet may be permitted to serve more than one ultrasound procedure room.*

…

1224.29 INTENSIVE CARE UNITS

…

1224.29.1.13 Airborne infection isolation room. *At least one airborne infection isolation room shall be provided per unit. The room shall comply with the requirements of Section 1224.14.3; however, the adjoining toilet room is not required. Modular toilet~~/sink combination~~ units located within a privacy curtain may be used within the airborne infection isolation room. The modular toilet fixture shall ~~be completely contained within the cabinetry when not in use. Exhaust ventilation requirements shall comply with the California Mechanical Code~~ comply with Section 1224.29.1.4.*

…

1224.31 PSYCHIATRIC NURSING UNIT.

1224.31.1 Psychiatric unit space. *A psychiatric unit shall be housed in a separate and distinct nursing unit and shall provide the following:*

1224.31.1.1 General. *A psychiatric nursing unit shall meet the requirements of Section 1224.14.*

…

1224.31.1.15 Toilet rooms. *Each patient room shall be provided with a private toilet room that meets the following requirements:*

1. *The door shall not be lockable from within.*
2. *The door shall be capable of swinging outward.*
3. *The ceiling shall be of tamper-resistant construction and the air distribution devices, lighting fixtures, sprinkler heads, and other appurtenances shall be of the tamper-resistant type.*

1224.31.1.16 Handwashing fixtures. *Handwashing fixtures located in patient rooms and patient toilet rooms may include anti-ligature features that do not compromise compliance with the hot and cold water supply controls, laminar flow, and sink requirements of Section 210.0 and Table 4-2 of the*

California Plumbing Code. Handwashing fixtures within patient rooms and patient toilet rooms in psychiatric nursing units are not required to be equipped with gooseneck spouts and the discharge point may be less than 5 inches (127 mm) above the fixture rim.

…

1224.35 REHABILITATION THERAPY DEPARTMENT

1224.35.1 Rehabilitation center space. *…*

…

11. Patient showers, where provided in centralized bathing facilities, shall ~~have a minimum floor area of 16 square feet (1.49 m²),~~ comply with Section 11B-608.2.2, no dimension of which shall be less than 4 feet (1219 mm), be equipped with handrails, privacy curtains, and designed for ease of accessibility. The floor shall be sloped to provide drainage.

Notation
Authority: Health and Safety Code Sections 1226, 1275, 1323.5, 18928, 129790 and 129850; Government 11152.5
Reference: Health and Safety Code Section 129850

SECTION 1225 [OSHPD 2]
SKILLED NURSING AND INTERMEDIATE-CARE FACILITIES

1225.1 Scope. *The provisions of this section shall apply to skilled nursing and intermediate-care facilities, including distinct part skilled nursing and intermediate-care services on a general acute-care or acute psychiatric hospital license, provided either is in a separate unit or a freestanding building. Skilled nursing facilities and intermediate-care facilities shall provide all common elements and support services. The required services for skilled nursing and intermediate-care facility licensure: dietary, pharmacy services, and activity program shall be provided. At the option of the provider, the medical model or the household model may be used.*

1225.1.1 Small House Skilled Nursing Facilities*. Skilled nursing facilities participating in the Small House Nursing Facilities Pilot Program established by and in conformance with Section 1323.5 of the California Health and Safety Code, shall meet all the provisions of Section 1225.4 Common Elements and Section1225.5.2 Household Model applicable to small house skilled nursing facilities.*

…

1225.4 COMMON ELEMENTS.

1225.4.1 NURSING SERVICE SPACE.

1225.4.1.1 Nurses' station. *….*

…

1225.4.1.2 Room identification. *Each patient room shall be labeled with an identification number, letter, or combination of the two.*

Exception: *Small house skilled nursing facilities.*

…

1225.4.1.7 Patient/nurse call system. *A patient/nurse call system complying with Section 517-123, California Electrical Code, shall be provided.*

1225.4.1.7.1 *In small house skilled nursing facilities, visitor toilet room(s) shall be equipped with a nurse call station.*

1225.4.1.8 Special-purpose rooms. *Special-purpose rooms for the purpose of single-patient occupancy shall be provided at a ratio of one room for every 35 patients or fraction thereof. Airborne infection isolation*

rooms may be included in determining the number of special-purpose rooms required for the facilities.

Exception: *The special-purpose room may be omitted if all patient rooms are single-resident rooms.*

…

1225.4.2 DIETETIC SERVICE SPACE.

1225.4.2.1 General. *Food service facilities and equipment shall conform with these standards, the standards of the National Sanitation Foundation, and the requirements of the local public health agency.*

1225.4.2.1.1 Distribution…*.*

1225.4.2.1.2 Dining space. *Separate dining spaces shall be provided for patients and staff. These spaces shall be separate from the food preparation and distribution areas.*

Exception: *Shared dining shall be provided for patients and staff in small house skilled nursing facilities.*

…

1225.4.2.2 Functional elements*. …*

1225.4.2.2.1 Location. *…*

…

1225.4.2.2.11 Toilet rooms. *Toilet rooms shall be provided for the exclusive use of the dietary staff. They shall not open directly into the food preparation areas, but shall be in close proximity.*

Exception: *Small house skilled nursing facilities, utilizing staff trained for dietary and care-giving responsibilities may provide toilet room(s) serving both the dietary and nursing service areas.*

1225.4.2.2.12 Lockers. *An enclosed, separate area shall be provided for dietetic service employees' clothing and personal belongings.*

Exception: *Small house skilled nursing facilities, utilizing staff trained for dietary and care-giving responsibilities may provide common locker room(s) serving both the dietary and nursing service areas.*

…

SUPPORT SERVICES

1225.4.3 ADMINISTRATION SPACE.

1225.4.3.1 Administration and public spaces. *An administration area shall be provided which shall include space for business, administration, admitting, public toilet room(s), lobby, and public telephone.*

1225.4.3.2 Medical record storage. *Space shall be provided for the storage of medical records.*

1225.4.3.3 Office. *An office for the director of nurses shall be provided.*

1225.4.3.4 Small House Skilled Nursing Facilities. *Small house skilled nursing facility units may provide the administration and public spaces, medical record storage and the nursing director's office in a separate centralized support area attached to the unit(s) or detached in a separate building in close proximity to the unit(s), as a part of the small house skilled nursing facility. This building shall be under OSHPD jurisdiction.*

…

1225.4.8 EMPLOYEE DRESSING ROOMS AND LOCKERS. *Separate dressing rooms with toilet(s), lavatories, and lockers for male and female personnel shall be provided.*

Exception:

1. *Small house skilled nursing facilities, with a peak shift of less than 5 staff, may provide a single toilet room serving both male and female personnel in compliance with the California Plumbing Code Table 4-3 footnote 7.*

…

1225.5 SKILLED NURSING UNIT MODELS. *The requirements of the Medical Model or the Household Model shall apply to the Nursing Unit(s) in its entirety.*

1225.5.1 MEDICAL MODEL.

…

1225.5.2 HOUSEHOLD MODEL.

1225.5.2.1 General construction. *Skilled nursing, intermediate-care facilities and small house skilled nursing facilities shall comply with Sections 1224.4 through 1224.13 whenever applicable, and the following sections:*

…

1225.5.2.2 Cluster/household unit and resident unit.

1225.5.2.2.1 Design. *Each resident unit shall consist of the resident rooms, resident support areas, and resident living areas. The unit shall be designed as a cluster/household resident unit or as a resident unit with double or single loaded access corridors. If the cluster/household unit design is utilized, it shall be designed around resident support and living areas with a maximum of 20 patients per cluster/household unit. If the double or single loaded corridor resident unit design is utilized, the access corridor shall be designed so that travel distance from the entrance of the resident unit to the furthest resident room door is no more than 60 feet (18.29 m) without a change of corridor direction or a node for a resident sitting area.*

Exception: *Small house skilled nursing facilities are limited to household units with a maximum of 12 patients per unit. Small house household units may also be developed as individual, free-standing facilities.*

…

1225.5.2.3 Resident room.

1225.5.2.3.1 Capacity. *In new construction and additions, the maximum room capacity shall be two patients. Resident sleeping areas in all double resident room designs shall be visually separated from each other by a full height wall or a permanently installed sliding or folding door or partition, and shall provide each patient direct use of and direct access to an exterior window at all times. Walls, doors, or partitions used to separate resident beds shall provide visual and acoustical separation. A door leading to each resident bed area in addition to the corridor door is not required. Other resident room arrangements where a permanent partition or door is not used to separate the resident sleeping areas may be utilized if adequate visual separation such as a cubicle curtain(s) and an exterior window for each individual resident sleeping area is provided. In this case individual thermostats for the resident bed areas shall not be required.*

Exception: *In small house skilled nursing facilities, resident sleeping areas in all double resident room designs shall be visually separated from each other by a full height wall or a permanently installed sliding or folding door or partition, and shall provide each patient direct use of and direct access to an exterior window at all times. Walls, doors, or partitions used to separate resident beds shall provide visual and acoustical separation.*

…

1225.5.2.3.6 Renovations. *For renovations that alter the physical configuration of the resident room but have existing structural limitations that require two resident beds to be located in a shared resident sleeping area, there shall be a minimum of 3 feet (0.91 m) between the sides and foot of the bed and the adjacent bed. If one bed must be located to the side of the other bed, there shall be a clearance of 4 feet (1.22 m) to any fixed obstruction available at the foot of this bed to permit the passage of equipment and bed without moving the resident's bed located nearest to the room door.*

Exception: *In small house skilled nursing facilities, two beds shall not be permitted in a shared resident sleeping area.*

…

1225.5.2.4 Resident support area.

…

1225.5.2.4.5 Medicine preparation. *A medicine preparation room or a self-contained medicine dispensing unit shall be provided for the provision of medication distribution. The self-contained medicine dispensing unit shall be under the visual control of the staff. If a medicine preparation room is utilized, it shall be equipped with a lockable door, have a minimum area of 50 square feet (4.65 m^2) and shall contain a refrigerator, locked storage for controlled drugs, a handwashing fixture, and a work counter with a minimum of 6 square feet (0.56 m^2) of work surface. If a self-contained medicine dispensing unit is utilized, it may be located at the nurses' station, in the clean utility room, in an alcove, or in other spaces convenient for staff control provided the area occupied by the unit does not encroach upon required minimum areas. The dispensing unit may be used in a medicine preparation room as locked storage for controlled drugs within the minimum area of 50 square feet (4.65 m^2), however, the standard "cup sinks" provided in many self-contained units shall not be a substitute for the required handwashing fixture. If there is no linen storage in the clean utility room, medicine preparation may be part of the clean utility room in which case an additional 20 square feet (1.8 m^2) dedicated for this purpose shall be required. A refrigerator shall also be required if medicine preparation is included in this room. Non-controlled prescription drugs may be stored inside the resident's sleeping room or toilet room if they are secured inside of an automatic closing and automatic locking dispensing unit that is secured in place.*

1225.5.2.4.5.1. *In small house skilled nursing facilities, if self-contained medicine dispensing units are provided, they shall be located in either a medication preparation room or a clean utility room.*

…

1225.5.2.4.9 Nourishment room. *A nourishment room or area for serving nourishments between meals shall be provided and shall contain a work counter, refrigerator, storage cabinets, and sink. Ice for patients' consumption shall be provided by an icemaker unit that may serve more than one nourishment station if the nourishment stations are in close proximity to each other. Where the icemaker unit is accessible to patients or the public, it shall be a self-dispensing type. The nourishment room shall include space for trays and dishes used for nonscheduled meal service. A handwashing fixture shall be in or immediately accessible from the nourishment room.*

1225.5.2.4.9.1 *In small house skilled nursing facilities, the nourishment area may be provided as part of the resident dietary area required under Section 1225.5.2.5.4.*

…

1225.5.2.5 Resident living area.

…

1225.5.2.5.4 Dietary area. *A resident dietary area shall be provided in the resident unit for the use of staff, patients, and family. The resident dietary area may include cooking equipment, counter tops, kitchen sink, and storage areas. This dietary area is in addition to the dietetic service space requirements in Section 1225.4.2.*

1225.5.2.5.4.1 *Food preparation spaces in the resident dietary area in a small house skilled nursing facility shall be designed to accommodate the method of food preparation required.*

California Department of Public Health, Licensing and Certification shall review proposed food services spaces at a preliminary stage of plan review.

1225.5.2.5.4.2. *The resident dietary area in a small house skilled nursing facility shall provide a hand-washing fixture. This handwashing fixture shall be in addition to the kitchen sink and shall be located in or immediately accessible to the resident kitchen facilities.*

1225.5.2.5.4.3 *When provided, the resident dietary area in a small house skilled nursing facility shall have a commercial ware-washing space meeting the requirements for the care model used. This space shall be designed to prevent cross contamination by providing area for receiving, scraping, sorting, and stacking soiled tableware and for transferring clean tableware to point-of-use areas*

1225.5.2.5.4.4 *The resident dietary area in a small house skilled nursing facility shall provide access to self-dispensing drinking water and self-dispensing ice.*

(a) Ice-making equipment shall be accessible to residents and visitors

(b) Ice-making equipment shall be located, designed, and installed to minimize noise.

(c) Ice-making equipment shall be permitted to serve more than one food area within resident kitchen facilities.

Notation
Authority: Health and Safety Code Sections 1226, 1275, 1323.5, 18928, 129790 and 129850; Government 11152.5
Reference: Health and Safety Code Section 129850

SECTION 1226 [OSHPD 3]
CLINICS

1226.4 General construction. *…*

1226.4.1 Examination and treatment areas.

…

1226..4.1.4 Airborne infection isolation exam/treatment room. *Refer to Section 1224.4.4.1.~~1~~ 3.*

…

1226.9 CHRONIC DIALYSIS CLINICS. *…*

1226.9.1 Examination and treatment room(s).

…

1226.9.1.7 Airborne infection isolation exam/treatment room*. When provided, refer to Section 1224.4.4.1.~~1~~ 3.*

Notation
Authority: Health and Safety Code Sections 1226, 1275, 1323.5, 18928, 129790 and 129850; Government 11152.5
Reference: Health and Safety Code Section 129850

1227.3 Definitions.

…

LICENSING AGENCY *is the ~~Department of Health Services~~ California Department of Public Health.*

…

1227.4 General Construction.

…

1227.4.4 ~~Treatment or e~~Exam room. *If ~~a treatment room or~~ an exam room is provided, it shall have a minimum clear floor area of 80 square feet (7.43 m^2), the least dimension of which shall be 8 feet (2438 mm).*

1227.4.5 Treatment room. *Unless specified elsewhere, if a treatment room is provided, it shall have a minimum clear floor area of 120 square feet (11.15 m^2), the least dimension of which shall be 10 feet (3048 mm). A minimum of 3 feet (914 mm) is required between the sides and foot of the bed/gurney/table and any wall or other fixed obstruction. The room shall contain an examination light, work counter for medical equipment, a handwashing fixture, cabinets, medication storage and counter for writing or electronic documentation.*

…

1227.12 Nursing Service Space

…

1227.12.8 Utility rooms. *Utility rooms shall be provided in each nursing unit. Soiled and clean utility or holding rooms shall be separated and have no direct connection.*

1227.12.8.1 Clean utility room. *Clean utility rooms shall contain a work counter, handwashing ~~warming~~ fixture and storage facilities unless the room is used for storage and holding as part of a system for distribution of clean and sterile supplies, in which case the work counter and handwashing fixture may be omitted.*

1227.12.8.2 Soiled workroom or soiled holding room. *Soiled utility rooms shall contain a flushing-rim clinical sink or equivalent flushing-rim device, handwashing fixture, work counter, waste receptacles and linen hampers unless the room is used only for the temporary holding of soiled materials, in which case the flushing-rim clinical sink, handwashing fixture and work counter may be omitted. However, if the flushing-rim clinical sink is omitted, other provisions for disposal of liquid waste shall be provided.*

~~***1227.12.8.1 Size.*** *Utility rooms shall be designed for the separation of clean and soiled areas and provide not less than 100 square feet (9.29 m2). Alternately, separate clean and soiled utility rooms of not less than 50 square feet (4.65 m2) each may be provided. Additional square footage accommodating Section 1227.18 shall be provided if utility rooms also include linen and supply storage space.~~

~~***1227.12.8.2 Aisle widths****. Minimum aisle widths in utility rooms shall be 4 feet (1219 mm).*~~

1227.12.9 Treatment and exam rooms. *If ~~a~~ treatment rooms or exam rooms ~~is~~ are provided, ~~it~~ they shall ~~have a minimum area of 80 square feet (7.43 m^2), the least dimension of which shall be 8 feet (2438 mm).~~ comply with Sections 1227.4.4 and 1227.4.5.*

…

1227.12.11 Patient/nurse call system. *A patient/nurse call system shall be provided in compliance with Table 1224.4.6.5 and ~~accommodating~~ the provisions of Section 517-123~~,~~ of the California Electrical Code~~, shall be provided~~.*

…

1227.14 Dietetic Service Space.

…

1227.14.1 Dietetic service space. *The dietetic service space shall accommodate the provisions of Section 1225.~~5~~ 4.2.*

Exceptions:

1. *Unless ~~T~~the dietetic service in the correctional institution is found acceptable to the licensing agency.*
2. *A ~~C~~contractual arrangement for dietetic services with another health facility is acceptable to the licensing agency.*

…

1227.18 Storage.

1227.18.1 General storage. *~~Hospitals~~ Correctional treatment centers shall provide combined general and specialized storage space in accordance with the following: …*

Notation
Authority: Health and Safety Code Sections 1226, 1275, 1323.5, 18928, 129790 and 129850; Government 11152.5
Reference: Health and Safety Code Section 129850

EXPRESS TERMS
FOR
PROPOSED BUILDING STANDARDS
OF THE
OFFICE OF STATEWIDE HEALTH PLANNING AND DEVELOPMENT

REGARDING PROPOSED CHANGES TO
CALIFORNIA ELECTRICAL CODE
CALIFORNIA CODE OF REGULATIONS, TITLE 24, PART 3

LEGEND FOR EXPRESS TERMS
1. Existing California amendments or code language being modified are in italics when they appear in the model code text: All such language appears in *italics*, modified language is underlined.
2. New California amendments: All such language appears *underlined and in italics*.
3. Repealed text: All such language appears in ~~strikeout~~.

EXPRESS TERMS

CHAPTER 5
Special Occupancies

ARTICLE 517
Health Care Facilities

517.16 Receptacles with Insulated Grounding Terminals. Receptacles with insulated grounding terminals, as described in 250.146(D), shall not be permitted.
~~*[OSHPD 1, 2, 3 & 4] Isolated ground receptacles, where required for the reduction of electrical noise (electromagnetic interference) on the grounding circuit, are permitted in patient care areas. Two insulated equipment grounding conductors shall be run with the branch circuit conductors supplying the receptacle. One shall be the isolated ground conductor and the other shall be the equipment grounding conductor required by 517.13(B). The insulated grounding conductor shall terminate on the grounding terminal of the receptacle and the equipment grounding conductor required by 517.13(B) shall ground the outlet box on which the receptacle is installed. Isolated ground receptacles shall be identified by an orange color or an orange triangle located on the face of the receptacle as required by 410.56(D). Isolated ground receptacles in patient care areas shall be identified with a permanent sign or label that reads: "Caution – Not for Patient Equipment Use."*~~

Notation
Authority: Health and Safety Code Sections 1226, 1275, 1323.5, 18928, 129790 and 129850; Government 11152.5
Reference: Health and Safety Code Section 129850

EXPRESS TERMS
FOR
PROPOSED BUILDING STANDARDS
OF THE
OFFICE OF STATEWIDE HEALTH PLANNING AND DEVELOPMENT
REGARDING PROPOSED CHANGES TO
CALIFORNIA PLUMBING CODE
CALIFORNIA CODE OF REGULATIONS, TITLE 24, PART 5

LEGEND FOR EXPRESS TERMS
1. Existing California amendments or code language being modified are in italics when they appear in the model code text: All such language appears in *italics*, modified language is underlined.
2. New California amendments: All such language appears *underlined and in italics*.
3. Repealed text: All such language appears in ~~strikeout~~.

EXPRESS TERMS

CHAPTER 2
DEFINITIONS

210.0 **- H -**

Handwashing Fixture [OSHPD 1, 2, 3 & 4]. *Handwash fixtures consist of faucet, trim and sink as described:*

(1) Faucets and Trim

a. Hand washing fixtures used by medical and nursing staff, patients, and food handlers shall be trimmed with valves that can be operated without the use of hands.

i. Wrist or elbow blades shall be permitted unless otherwise noted in ~~where allowed per~~ Table 4-2.
ii. Blade handles used for this purpose shall be at least 4 inches (102 mm) in length.

b. Sensor operated fixtures shall be capable of functioning during loss of normal power.

c. Faucets shall not be equipped with an aerator but may be equipped with a non-aerating laminar flow device.

d. If deck-mounted manual temperature controls are used they shall use wrist blades at least 4 inches (102 mm) in length. Faucet mounted temperature controls are prohibited.

e. …

CHAPTER 13
HEALTH CARE FACILITIES AND MEDICAL GAS AND VACUUM SYSTEMS

1301.2 Health Care Facilities. This chapter applies to the special fixtures and systems in health care facilities and to the special plumbing requirements for such facilities. Other plumbing in such facilities shall comply with other applicable sections of this code.

1301.2.1 [OSHPD 1, 2, 3 & 4] *Medical gas systems for health care facilities that are regulated by OSHPD (hospitals, skilled nursing facilities, and intermediate care facilities, licensed clinics, and correctional treatment centers) shall be in accordance with NFPA 99 ~~- 2005~~, Standard for Health Care Facilities. See California Building Code Table ~~1224.2~~ 1224.4.6.1 for location and number of station outlets for oxygen, vacuum, and medical air.*

Notation
Authority: Health and Safety Code Sections 1226, 1275, 1323.5, 18928, 129790 and 129850; Government 11152.5
Reference: Health and Safety Code Section 129850

CALIFORNIA PLUMBING CODE – MATRIX ADOPTION TABLE
CHAPTER 13 - HEALTH CARE FACILITIES AND MEDICAL GAS AND VACUUM SYSTEMS

(Matrix Adoption Tables are non-regulatory, intended only as an aid to the user. See Chapter 1 for state agency authority and building application.)

Adopting Agency	BSC	SFM	HCD			DSA			OSHPD				BSCC	DPH	AGR	DWR	CA	SL	SLC
			1	2	1-AC	AC	SS	SS/CC	1	2	3	4							
Adopt Entire Chapter																			
Adopt Entire Chapter as amended (amended sections listed below)									~~X~~	~~X~~	~~X~~	~~X~~							
Adopt only those sections that are listed below									X	X	X	X							
Chapter/Section																			
~~1301.2~~ 1301.2.1									X	X	X	X							

oshpd Office of Statewide Health Planning and Development

Hospital Building Safety Board
400 R Street, Suite 200
Sacramento, California 95811-6213
(916) 440-8453
Fax (916) 324-9118
http://www.oshpd.ca.gov/Boards/HBSB/index.html

MEETING REPORT
HOSPITAL BUILDING SAFETY BOARD (HBSB)

Wednesday, March 12, 2014
10:00 a.m. – 3:30 p.m.

Tsakopoulos Library Galleria 828
I Street, East Room
Sacramento, CA 95814
(916) 264-2800

Board Members Present
John Egan, Chair
Arlee Monson, Vice-Chair
Enid Eck
Michael Foulkes
Lou Gilpin
Henry Huang
Bert Hurlbut
Eric Johnson
Scott Karpinen
Bruce Macpherson
Trailer Martin
Poki Namkung
Michael O'Connor
Carl Scheuerman
Brian Spindler
Jennifer Thornburg

OSHPD Staff
Robert David, OSHPD Director
Paul Coleman, FDD Deputy Director
Glenn Gall
Roy Lobo
Chris Tokas
Beth Wied

HBSB Staff
Linda Janssen, Executive Director
Kathi Zamora, FDD
Cathy Kane
Evett Torres

1

1. Call to Order – John Egan, HBSB Chairperson

HBSB Board Chair John Egan called the meeting to order at 10:03 a.m. He announced that a quorum was present.

Welcome and Introductions

The Board members introduced themselves.

Review and approve the draft November 20 and 21, 2013 Meeting Report

Mr. Egan reviewed the events of the November two-day meeting.

- The Board held a strategic planning session to devise Board and Committee goals for 2014.
- The Board discussed the role of Committee Chairs as outlined in the Policies and Procedures.
- Breakout sessions for committees to set their goals were actually done by the Board as a whole. This was effective in enabling the committees to interface about achieving common goals.
- Committee Chairs discussed the achievements of their committees in 2013.
- Board members discussed the dangers of over-legislating health care.
- The Board discussed possible new committees for 2014:
    - There was some interest in reinstituting an Inspector of Record (IOR) Committee.
    - There is no apparent need yet for a Seismic Compliance Committee.
    - The Advanced Technology Committee held its first meeting last week.
- The Board members approved the 2014 Board goals.

- Mr. David conducted the swearing-in ceremony for new board member, Mr. Robert Chason. He serves as a Public Member.
- Mr. David discussed effects of the Affordable Care Act and bills presently in the Legislature.
- Carl McLaney gave a presentation on Cal-Mortgage.
- Mr. Huang gave a presentation on roles and responsibilities of local jurisdictions.
- Mr. Monson reported on the Education and Outreach Committee, in particular the seminars presented last fall.
- Simin Naaseh reported on the Instrumentation Committee in place of Mr. Gilpin.
- Mr. Hurlbut reported on the Standard Details Committee.
- Mr. Huang reported on the Structural/Non-Structural Committee.
- John Gillengerten gave a presentation on code changes that will affect design requirements.
- Mr. Karpinen gave a presentation on mechanical detailing.
- Mr. Coleman gave an update on FDD.
- Hussain Bhatia reported on seismic compliance, particularly HAZUS.
- Mr. Bhatia demonstrated OSHPD's use of Google Earth as a tool both for tracking hospital-associated projects and for providing emergency response.
- Mr. Gall gave a regulations update.

MOTION: (M/S/C/) [Scheuerman/Foulkes]
The Board voted unanimously to approve the November 20 and 21, 2013 HBSB meeting report.

2. OSHPD Update – Robert P. David, OSHPD Director

Mr. David spoke about trends in California health care, as well as state legislature and budget developments regarding OSHPD activities.

Trends in California health care

- Hospitals are in a "hunkering down" mode in terms of funding capital improvements unless it is required seismic work.
- There is a downward trend in hospital employment.
- There is an uptick in hospital mergers and affiliations, particularly in Southern California.
- As of January, 85% of all acute care buildings in the state have met the SPC2 or better standard for seismic compliance. 411 buildings remain to be done before 2020.
- FDD has an opportunity to look at and possibly change approval processes; a remote over-the computer operation is in development.
- For the past two years, OSHPD has worked with clinics to propose updated building standards consistent with national standards and Title 22, that would also reduce the cost of clinic construction. The regulations unit devised potential changes to the mechanical and plumbing standards; however, they were not adopted by the Building Standards Commission. OSHPD is in the process of issuing an RFP for a consultant to assist OSHPD with California Environmental Quality Act (CEQA) review of the standards.

State Legislature and State Budget Developments

- Now that the state's fiscal situation has improved, loans taken out for the General Fund against special funds such as the Hospital Building Fund will start to be paid back beginning July 1.
- An emerging theme in new legislation is health care data for both research and increased cost transparency. OSHPD will be tracking associated bills.
- There is much interest in the need to increase the health care workforce, particularly in underserved communities, since several million more people will have health insurance. Some programs at OSHPD help to address those issues.

3. Board Procedures Committee – Michael Foulkes, Committee Chair

Overview and approval of Meeting Report, December 18, 2013

Mr. Foulkes reported that at the December meeting, the committee discussed the following.

- Committee assignments. The Advanced Technology Committee has been officially formed. The Seismic Compliance Committee is on hold.
- Meeting dates. The committee seeks to lock in its semi-quarterly meeting dates six months in advance.
- The CEQA issues and how they are impacting the codes themselves.
- The need for a new Chair and Vice-Chair.
- Consulting members: their roles and responsibilities. They should be used properly: adding expertise to the work of the HBSB but not taking the place of Board members. Terms last for one year.
- Code changes. The Procedures reference some parts of code that are no longer relevant; those references were motioned to be removed.

- The appeal process. The committee discussed ways to streamline the process, and requested OSHPD to develop a proposal for the April meeting. The committee has been examining appeals processes in other local jurisdictions.

Discussion and Public Input

Mr. Huang stated that the word “regulations” should be inserted on page 43.

In answer to a question from Mr. Karpinen about the lack of appeals in the last few years, Mr. Coleman replied that there are now a number of other processes—such as the Comment and Process Review (CPR), Ombudsman, and Quality of Service Survey—that the industry has successfully used to resolve issues.

MOTION: (M/S/C/) [Foulkes/O’Connor]
The Board voted unanimously to approve the December 18, 2013 Board Procedures Committee meeting report.

4. Education and Outreach – Arlee Monson, Committee Chair

Overview and approval of Meeting Report, January 16, 2014

Mr. Monson reported that at the January meeting, the committee’s topics followed the goals set in the November Board meeting. They discussed the following:

- The “Tips from the Experts” workshop
- Possible seminars, in particular one focused toward design professionals
- Webinars and videos for training sessions

- Support for Standard Building Code (SBC) and National Plumbing Code (NPC) deadlines
- An additional “Tips” seminar scheduled for May 30. It will be a condensed one-day seminar.
- New seminars focused on the following:
    - Disseminating more material on the meaning of “Non-Materially Alter” according to the Code Application Notice (CAN).
    - Standard Details and their use
    - A special seismic certification program slated to commence in May
    - Updating the “Tips” guide to ensure that references to the code are up-to-date
- The webinar issues are the OSHPD limitation of 150 people on audience size and the need to find the right kind of webinar venue.
- OSHPD’s infrastructure does not support podcasts on their website
- Video development for the eServices portal is limited by the lack of a video server.
- The committee and the public offered suggestions for more training for Inspector of Record (IOR) issues, and for opportunities from other committees for education and public outreach.

MOTION: (M/S/C/) [Monson/Macpherson]

The Board voted unanimously to approve the January 16, 2014 Education and Outreach Committee meeting report.

5. Administrative Processes & Code Changes Committee – Scott Karpinen, Committee Chair

Overview and approval of Meeting Report, January 30, 2014

Mr. Karpinen reported that the committee had discussed the following.

- Committee goals that came out of the board meeting.
    - Hospice regulations: Mr. Gall informed the committee that the Office of the State Fire Marshall has taken the lead on this item.
    - Policy Intent Notices (PINs) and Code Application Notices (CANs) are ongoing for this committee.
    - The OSHPD fee structure – it will remain as is for now.
    - eSP enhancements and functionality.
    - New code enhancements and addendums.
    - Materially alter.
    - OSHPD 3-SE.
- Mr. Karpinen gave a high level overview of the updates for the code process.
    - This is currently a slow time in the cycle for code changes.
    - There is some general maintenance being done on OSHPD-1.
    - For OSHPD-2, OSHPD has produced some language in response to a statutory mandate to the pilot program. The committee is awaiting the final broadcast information.
    - There are some maintenance items on OSHPD-4 work.
    - The committee is responding to OSHPD's request for feedback and technical expertise on the new code revisions for interventional radiology rooms.

- For OSHPD-3, major changes have occurred in the code to make interpretation easier for cities and counties.
- OSHPD has covered work without permits – a major change in code.
- A number of PINs and CANs are forthcoming, including a functional program CAN and a temporary systems utilities CAN.

- The committee had a discussion on handwashing fixtures, much of it stemming from the fact that there were issues with code that had necessitated some errata. Mr. Coleman explained the issue regarding gooseneck fixtures – some of the hands-free electronic ones harbor bacteria.
- The committee discussed the Materially Alter CAN; the industry wants clarification to make it easier for the structural side. For now it will be left as is and the committee will look into the problems.
- ASHRAE 170 is going to be a substantial issue. The committee would like a speaker to address the topic.

Discussion and Public Input

Mr. O'Connor asked about the hospice regulations that had been sent over to the State Fire Marshall. Mr. Coleman explained that the legislation as originally written directed OSHPD to be the lead in developing the hospice regulations, working in conjunction with the State Fire Marshall. The revised bill specified the State Fire Marshall as the lead agency.

Mr. O'Connor asked about the timeframe for OSHPD-3. Mr. Coleman responded that OSHPD is working on an RFP to solicit a consultant for the initial study and any

necessary Environmental Impact studies. He felt that the soonest it could go into effect would be the 2016 code.

Ms. Eck commented on the handwashing fixtures issue: thorough investigation for internal design and deck-mounted components is necessary—hand hygiene is vital to health care. There is a place for OSHPD to provide guidance around essential criteria that need to be met. Mr. Coleman stated that the code gives a definition for "gooseneck" that has to do with the distance of the spout from the rim level of the fixture. He added that OSHPD will always consider alternate methods of compliance if a facility were to come in with a fixture that meets infection control needs better.

MOTION: (M/S/C/) [Karpinen/Hurlbut]
The Board voted unanimously to approve the January 30, 2014 Administrative Processes & Code Changes Committee meeting report.

For next steps, Mr. Karpinen mentioned an issue with ASHRAE 170 and OSHPD's goal to reflect national standards, having to do with OSHPD's Table 4 on ventilation.

6. Standard Details Committee – Bert Hurlbut, Committee Chair

Overview and approval of Meeting Report, February 19, 2014

Mr. Hurlbut summarized the events of the Standard Details Committee meeting.

- They thoroughly reviewed the Standard Drywall Ceiling Details. The committee had to keep stressing to the public that these were Best Practices. People can go back to code, but in that case they have to engineer their systems; or, they

can use the Standard Details which require no scrutiny in review. PIN 51 supports this.

- The committee reviewed Acoustical Ceiling Details and discussed comments made in the past. Again, the bottom line is that they are Best Practices.
- They discussed the Life Safety Details that are soon to be reviewed by Mr. Dunger.
- They had a short discussion on Electrical Details with Mr. Johnson.

Mr. Hurlbut pointed out a meeting report typo on page 89: "flux" should read "flex."

The committee's next steps are to review the Mechanical/Electrical Details.

MOTION: (M/S/C/) [Hurlbut/Scheuerman]
The Board voted unanimously to approve the February 19, 2014 Standard Details Committee meeting report with the change noted above.

7. Advanced Technology Committee – Eric Johnson, Committee Chair

Overview of Committee's First Meeting/Committee Goals for 2014

Mr. Johnson reported on the initial meeting of the new Advanced Technology Committee.

- The committee is in the discovery stage. He described its two interests:
    1. Emerging technology to be moved into health care in OSHPD facilities.

2. OSHPD is wanting to embrace new technology in the form of such things as electronic reviews, electronic archives, and the capability to transform document approval, review, and record keeping.

- The committee will poll vendors to see who would be willing to speak to the committee on industry developments.
- The committee will continue to examine codes and regulations to ensure that they do not serve to keep emerging technology out of hospitals. Ultimately technology is going to drive costs down and change the practice of health care.
- Mr. Johnson has invited FDD staff to speak on electronic review.
- Fire/Life Safety systems are merging and the CANs are gone.
- The committee touched on emerging technology for structural systems. New software is available for proving systems.
- The committee discussed assisting FDD in improvement of Plan Review, to make it better and faster with improved tracking.
- The committee would like to have guest speakers who provide the hospital IT point of view.
- Public input is also welcome to enable the committee to maintain perspective.

Discussion and Public Input

Mr. Gilpin asked about document security; Mr. Johnson responded that the committee is aware of concern about storage. As the committee is in discovery mode, the members hope to narrow the list of issues down to the top four key areas, and get something done this year.

Mr. O'Connor commented on the difficulty of tracing where information resides, level of redundancy, data rooms, and so on. He asked if the committee is going to examine data location. Mr. Johnson replied that he hopes to keep the committee at a high level—not getting bogged down in smaller issues but keeping an eye on any potential conflicts with the next generation of health care tools.

Mr. Johnson continued that the other significant role of this committee in the industry is getting OSHPD's FDD capable of working in the virtual world. Ultimately there is much potential regulation that could come from this. At the very least, we need to understand the language and the vocabulary.

8. Facilities Development Division Update – Paul Coleman, FDD Deputy Director

Mr. Coleman reported the following.

- The FDD workload has been decreasing.
- A number of projects are moving into the construction phase.
- The dollar value of construction projects coming into the office is down, but the number of projects is up.
- The Affordable Care Act has caused projects to be delayed, downsized, or withdrawn – about $2 billion in the last couple of years.
- Between now and January 1, 2020, about $2.3 billion in seismic work will be done.
- In 2013, FDD did almost 16,000 reviews. There is an average of at least two Post-Approval Documents for every other kind of review.

- The lower the cost of the project, the higher the probability that there will be many amended construction documents. This may be caused by a lack of due diligence in looking at existing conditions and ensuring that the design is based on what actually exists in the hospital.
- About 68% or reviews are done within the first five days or so.
- Owners are now aware of the number of Post-Approval Documents their designers are producing, because they must sign for the $250 fee.
- Substantial improvement has been made in the last couple of years in percentage of projects meeting goals/number of projects/dollar value of projects.
- The industry is not much inclined to use the SB 1838 program, which is for projects of less than $50,000 in value (excluding fixed equipment) being exempt from Plan Review.
- Work contracted out has come down 152% from last year, a reflection of the lack of large projects.
- A condensed one-day “Tips for the Experts” workshop may be held in the Sacramento area.
- Workshop topics of interest would be the Electronic Services Portal, incorporating Standard Details, whether to Materially Alter or not, the functional program PIN 57, manufacturer certification of equipment, and 2013 Building Code training. There is a possibility of one-day seminars in the May-June timeframe.
- John Donelan recently provided Fire Life Safety training for all FDD staff.

- The percentage of projects submitted through the Electronic Client Access online is gradually improving. Last month, one-third of applications were submitted this way.
- As of March 1, in order to obtain a field review of a Post-Approval Document (PAD) or new project, the project must be summited in Electronic Client Access.
- For 2013, FDD brought in about $49 million and spent $46 million. The budget was at $56 million, so FDD stayed within the revenues collected.
- The responses from the Quality of Service Survey brought an overall rating of 3.5 (C+). FDD scored highest in providing a professional level of service, and lowest in providing clear answers to questions.
- FDD is in the process of doing an Operational Strategic Plan. So far the team has identified socio-cultural issues, possibly expanding the levels of Acute Care Standards, and the option to license a portion of an existing hospital building separately.
- The new Advanced Technology Committee is going to help FDD discern how the industry does its business.

Ms. Namkung commented on the phenomenal demographic changes in population in California taking place. Multi-cultural needs affect how facilities ought to be structured – there are different takes on health care, care delivery and standards of care. Mr. Coleman agreed, and commented that the industry needs to provide information on how building codes and standards are affecting various populations.

Ms. Eck raised the subject of the role of family in health care delivery. It might be interesting to research how care is delivered in other parts of the world – to examine care delivery models that are more inclusive of the values of the population. Mr. Coleman responded that FDD is trying to adopt and use national standards, which are heading more and more towards the concept of family care. Room sizes are getting larger to accommodate family members who want to be present. Ms. Eck felt that the national standards are going to be behind the curve for California's particular population composition.

Mr. Gall stated that John Kouletsis had led the National Standards with Guidelines group in talking about involvement and integration of family care in the nursing unit. Mr. Tokas commented that the operational standards rather than the building standards target what Ms. Eck is looking for. Ms. Eck countered that building design will either support or hinder the integration of family care.

- Mr. Coleman continued that decreased personal interaction is a problem with electronic plan review. FDD seeks to ensure that communication – one of OSHPD's core values – is never lost in the process.
- For objectives and opportunities, FDD is investing in technology to improve efficiency and effectiveness as well as to reduce the cost of business processes.
- FDD is considering whether the 60/30/30 goal is right for every project; smaller projects may be very different from multi-million dollar projects. FDD is looking at optimizing the processes based on project type.
- FDD has set three primary objectives for 2014:

1. Continue expanding Electronic Plan Review capabilities.
2. Continue to expand the Standard Details. They have all been updated to the 2013 code.
3. Continue to develop over-the-counter and over-the-computer capabilities.

9. SB 90 and SB 499 Update – Roy Lobo, FDD Structural Services Section

Mr. Lobo began by reporting the following.

- For the fourth year, the work is being done by Brett Beekman.
- The statute requires for the work to be done by 2020. By that time all hospitals should have no SPC-1 buildings.
- Mr. Lobo's report is on the website.

Mr. Lobo's report presentation included the following information.

- 2013 SB 499 anticipated completion dates for the buildings.
- A series of charts showing SB 499 Method of Compliance (Retrofit, Rebuild, Replace, and Remove) for the buildings in the context of timelines.
- SB 499 anticipated completion dates for Adventist Health, Dignity Health, Sutter Health, University of California, unaffiliated, investor, non-profit, and city/county/district hospitals.
- Comparisons of SB 90 and SB 499 data.

10. Regulations Update – Glenn Gall, FDD Building Standards Unit

Mr. Gall gave a presentation in which he covered the following.

- He displayed the Building Standards Commission's timeline for the development of the supplement for the 2013 codes.
- This cycle is somewhat of a maintenance cycle more than a major code revision.
- The HBSB Ad Hoc Code Advisory Committee, which was to meet the next week, will look at the vast majority of OSHPD's proposed amendments. It is a blended committee that will consider all disciplines and all code types.
- OSHPD is starting to align its codes in preparation for national code making. It also seeks to clarify the code in some places.
- Changes in Chapter 1224 better distinguish Imaging Services versus Diagnostic and Procedural Integration of Imaging Services. This will enable better, clearer codes to be put in place in the future.
- OSHPD aligned its requirements with Title 22 for modular toilet fixtures in ICU settings.
- The handwashing fixtures definition has shifted to the plumbing code.
- In a psychiatric setting the handwashing fixtures can be a different type, that is, not gooseneck.
- Changes in Chapter 1225 are in response to the pilot small house skilled nursing facilities program.
- The Correctional Treatment Center requirements are updated to align with the updated 1224 requirements.
- The sole change to the Electrical Code deletes an OSHPD amendment, because of a National Code change.
- The problems encountered with sensor-operated handwashing fixtures in particular are still being clarified.

- The standards in the Fire Code and some of the standards in the Building Code under the Fire Marshall's requirements have been changed to an updated code standard. OSHPD is removing the year indication in the Plumbing Code so that it doesn't get out of sync with what is also being adopted by the Fire Marshall's office.

Mr. Gall presented other new items.

- PIN 55, OSHPD Special Seismic Certification Pre-Approvals, was posted in February.
- PIN 56, a Request for Opening Closed Projects, was also posted in February.
- Mr. Gall noted that CANs are applicable to the code cycle under which they are written. Sometimes clarifying the code cancels the need for the CAN; many CANs do not go forward with a new code.
- CAN 2 is new. It is a standing CAN, formerly CAN 1-7-103, that explains OSHPD's jurisdiction. It applies to all projects and all code cycles.
- OSHPD has a proposed update for CAN 2-11B, Accessibility.
- CAN 2-102.6, Remodel, has been updated and posted under the 2013 CANs.
- CAN 1-7-2100, Clinics, has a clarified flowchart and updated language.
- Facility Guidelines Institute (FGI) guidelines are soon to come. They reflect changing demographics.

Discussion and Public Input

Mr. Scheuerman asked about any upcoming structural regulations. Mr. Gall responded that much of it is clean-up, and that OSHPD is looking at it further.

Mr. Scheuerman added that the State Fire Marshall has extensive amendments proposed to add the I.2.1 Occupancy category to a number of the code sections that reference I.2. There has been much discussion in industry that I.2.1 is an artifact that does not belong in the code. By and large, the evolution of the Model Code has resolved those issues to the point that I.2.1 should be categorized as a B Occupancy.

Mr. Gall responded that much work was done by the International Code Council (ICC) Committee to get ambulatory health care centers recognized and have it bridge all of the I.2.1 issues.

11. Meeting Wrap Up – John Egan, HBSB Chairperson

Mr. Egan stated that the next quarterly meeting is scheduled for August 27.

He encouraged the Board members to complete their Form 700s by April 1.

Mr. Spindler offered a comment from the design professional side, on the value of showing details that are compliant.

Mr. Egan adjourned the meeting at 2:35 p.m.

OSHPD Office of Statewide Health Planning and Development

Hospital Building Safety Board
400 R Street, Suite 200
Sacramento, California 95811-6213
(916) 440-8453
Fax (916) 324-9118
www.oshpd.ca.gov/Boards/HBSB/index.html

A public meeting of the **Hospital Building Safety Board** (HBSB)
will be held on:

Wednesday, November 19, 2014
1:00 pm to 4:00 pm

and

Thursday, November 20, 2014
10:00 am to 4:00 pm

at the

Red Lion Hotel
500 Leisure Lane
Sacramento, CA 95815
(916) 922-2020

AGENDA

DAY ONE—Wednesday, November 19, 2014
1:00 pm to 4:00 pm

NOTE: Agenda order is tentative and subject to change without prior notice.

TAB	ITEM
1	**Call to Order**—John Egan, HBSB Chairperson • Welcome and Introductions • Announcements • Review and approve the March 12, 2014 HBSB Meeting Report • Discussion and Public Input

2 **OSHPD Update**—Robert P. David, OSHPD Director

- Swearing-in ceremony for new HBSB members
- Recognition of outgoing HBSB Chair, John Egan
  (John stays on the board in his capacity as the Geotechnical Engineer until he terms out in April 2015)
- Recognition of outgoing HBSB Vice Chair, Arlee Monson
- OSHPD Update
- Discussion and Public Input

3 **Nominations for HBSB Chair and Vice-Chair Kick Off**—Michael Foulkes

- Review of process for HBSB Chair and Vice Chair nominations
- Nominations Committee presents proposed Slate of Officers
- Committee Accepts Nominations from the Floor (if nominations are received, the committee will interview those individuals before voting occurs)

4 **Education and Outreach Committee Report**—Arlee Monson, Chair

- Overview and approval of Meeting Reports:
  - May 1, 2014
  - June 18, 2014
  - August 13, 2014
  - September 10, 2014
- Overview of October 9, 2014 "Hot Topics" seminar in Anaheim and October 30, 2014 "Hot Topics" seminar in Concord
- Discussion and Public Input

5 **Standard Details Committee Report**—Bert Hurlbut, Chair

- Overview and approval of Meeting Reports:
  - May 15, 2014
- Discussion and Public Input

6 **Administrative Processes and Code Changes Committee**—Scott Karpinen, Chair

- Overview and approval of Meeting Reports:
  - June 26, 2014
  - September 23, 2014
- Discussion and Public Input

7 **Instrumentation Committee**—Lou Gilpin, Chair

- Overview and approval of Meeting Report:
  - October 29, 2014

8 **Special Presentation on Zero Energy Buildings**—Bruce Macpherson

- Discussion and Public Input

DAY TWO—Thursday, November 20, 2014
10:00 am to 3:30 pm

NOTE: Agenda order is tentative and subject to change without prior notice.

9 **Call to Order**—John Egan, HBSB Chairperson
- Welcome and Introductions
- Announcements
- Discussion and Public Input

10 **Report on OSHPD's Response to the Napa Earthquake**—Chris Tokas
- Discussion and Public Input

11 **Google Earth** Presentation—Hussain Bhatia
- Discussion and Public Input

12 **Facilities Development Division** Update—Paul Coleman, Deputy Director
- Discussion and Public Input

13 **SmartBoard Demonstration**—Ali Sumer, FDD
- Discussion and Public Input

14 **Special Presentation: Experimental Assessment of Lath and Plaster/Metal-Stud Partitions**—Rami Elhassan
- Discussion and Public Input

15 **SB 499 Update**—Roy Lobo
- Discussion and Public Input

16 **Regulations Update**—Glenn Gall, FDD Building Standards Unit
- Proposed Code Changes for the next Code Cycle
- Discussion and Public Input

17 **Nominations for HBSB Chair and Vice Chair**—Michael Foulkes
- The HBSB Board Members will vote to elect the new Chair and Vice Chair who will officially take office on January 1, 2015
- Discussion and Public Input

18 **Meeting Wrap Up**—John Egan, HBSB Chairperson
- Discussion and Public Input

19 **Information Items**
- HBSB Membership
- HBSB Roster
- HBSB Consulting Members Roster
- HBSB Committee List

- HBSB Meeting Attendance Record

Questions may be directed to the Board Staff at 916-440-8453. If Board Members or staffs are unable to attend this meeting, please notify Board Staff within 48 hours of receipt of this agenda.

REMINDER: Please call (916) 440-8453 on Tuesday, November 18th after 3:00 p.m. to confirm that the meeting will take place as scheduled. The recording will verify the meeting date and location.

NOTE: Meeting facilities and restrooms are accessible to the physically disabled. If any special accommodations (assistive listening device, sign language interpreter, etc.) are needed, please contact the Board Staff at (916) 440-8453. Requests should be made as soon as possible but no later than 10 business days prior to the meeting.

For assistance with lodging or travel arrangements, please contact the Board Staff at (916) 440-8453

FULL BOARD QUARTERLY MEETING

November 19 & 20, 2014

John Egan – Chair
Arlee Monson – Vice Chair

Meeting Date: March 12, 2014; Sacramento

OVERVIEW OF TOPICS

Board Members Present
John Egan, Chair
Arlee Monson, Vice-Chair
Enid Eck
Michael Foulkes
Lou Gilpin
Henry Huang
Bert Hurlbut
Eric Johnson
Scott Karpinen
Bruce Macpherson
Trailer Martin
Poki Namkung
Michael O'Connor
Carl Scheuerman
Brian Spindler
Jennifer Thornburg

OSHPD Staff
Robert David, OSHPD Director
Paul Coleman, FDD Deputy Director
Glenn Gall
Roy Lobo
Chris Tokas
Beth Wied

HBSB Staff
Linda Janssen, Executive Director
Kathi Zamora, FDD
Cathy Kane
Evett Torres

Meeting Date: March 12, 2014; Sacramento

OVERVIEW OF TOPICS

- OSHPD Update – Bob David, OSHPD Director
  - ***Trends in California health care***
  - hospitals are in a "hunkering down" mode
  - there has been a downward trend in hospital employment
  - an uptick in hospital mergers and affiliations
  - as of January, 85% of all acute care buildings in the State have met the SBC2 or better standard for seismic compliance
  - ***State Legislature and State Budget Developments***
  - improved State fiscal situation means that loans taken out for the General Fund against special funds such as the Hospital Building Fund will start to be paid back.
  - an emerging theme in new legislation is health care data for both research and increased cost transparency
  - much interest in the need to increase the health care workforce, particularly in underserved communities

Meeting Date: March 12, 2014; Sacramento

OVERVIEW OF TOPICS

- Board Procedures – Michael Foulkes, Committee Chair
  - ***Meeting Report, December 18, 2013***
  - committee assignments - The Advanced Technology Committee is officially formed; Seismic Compliance Committee is on hold
  - discussion of how CEQA issues are affecting the codes
  - consulting members' roles and responsibilities on committees
  - the appeal process - discussed ways to streamline the process, requested OSHPD to develop a proposal, and has been examining appeals processes in other local jurisdictions

Meeting Date: March 12, 2014; Sacramento

OVERVIEW OF TOPICS

- Education and Outreach – Arlee Monson, Committee Chair
  - ***Meeting Report, January 16, 2014***
    - "Tips from the Experts" workshop
    - developing webinars and videos for training sessions
    - provide support for Standard Building Code (SBC) and National Plumbing Code (NPC) deadlines
    - new possible seminar topics focus on the following:
      - ✓ disseminating more material on the meaning of "Non-Materially Alter" according to the Code Application Notice (CAN).
      - ✓ Standard Details and their use
      - ✓ special seismic certification program slated to commence in May
      - ✓ updating the "Tips" guide to ensure that code references are current
    - suggestions for more training for Inspector of Record (IOR) issues and for opportunities from other Board committees for education and public outreach

Meeting Date: March 12, 2014; Sacramento

OVERVIEW OF TOPICS

- Administrative Processes & Code Changes – Scott Karpinen, Committee Chair
  - ***Meeting Report, January 30, 2014***
    - high level overview of the updates for the code process.
  - ✓ currently a slow time in the cycle for code changes.
  - ✓ some general maintenance being done on OSHPD-1 & OSHPD-4
  - ✓ For OSHPD-2, OSHPD has produced some language in response to a statutory mandate to the pilot program.
  - ✓ new code revisions for interventional radiology rooms.
  - ✓ changes to OSHPD-3 to make interpretation easier for cities/counties.
  - ✓ OSHPD has covered work without permits – a major code change
  - ✓ functional program CAN and temporary systems utilities CAN.
    - discussion on handwashing fixtures
    - discussion of the Materially Alter CAN; clarification for the structural aspects
    - ASHRAE 170 is going to be a substantial issue

Meeting Date: March 12, 2014; Sacramento

OVERVIEW OF TOPICS

- Standard Details – Bert Hurlbut, Committee Chair
  - ***Meeting Report, February 19, 2014***
    - thoroughly reviewed the Standard Drywall Ceiling Details; committee had to keep stressing to the public that these are Best Practices.
    - use of Standard Details reduces scrutiny in review; PIN 51 supports this.
    - committee reviewed Acoustical Ceiling Details and discussed comments made in the past; again, the bottom line is that they are Best Practices.
    - discussed Life Safety Details that are soon to be reviewed by OSHPD
    - short discussion on Electrical Details
    - committee's next steps are to review the Mechanical/Electrical Details

Meeting Date: March 12, 2014; Sacramento

OVERVIEW OF TOPICS

- Advanced Technology – Eric Johnson, Committee Chair
  - ***First Meeting/Committee Goals for 2014***
  - The committee is in the discovery stage. He described its two interests:
  - ✓ Emerging technology to be moved into health care in OSHPD facilities.
  - ✓ OSHPD is wanting to embrace new technology
  - solicit vendors to speak to the committee on industry developments.
  - continue to examine codes and regulations to ensure that they do not hinder of serve to keep emerging technology out of hospitals.
  - FDD staff invited to speak on electronic review.
  - Fire/Life Safety systems are merging and the CANs are gone.
  - emerging technology for structural systems; new software is available for proving systems.
  - assist FDD in Plan Review process, to make it better and faster with improved tracking.
  - hopes to keep the committee at a high level - not get bogged down in small issues, but keep an eye on any potential conflicts with the next generation of health care tools.
  - another significant role of this committee is helping to get OSHPD's FDD capable of working in the virtual world.

Meeting Date: March 12, 2014; Sacramento

OVERVIEW OF TOPICS

- Facilities Development Division Update – Paul Coleman, FDD Deputy Director
  - FDD workload has been decreasing.
  - A number of projects are moving into the construction phase.
  - $$$ value of construction projects coming into the office is ↓, but the # of projects is ↑
  - Affordable Care Act has caused projects to be delayed, downsized, or withdrawn
  - $2.3 billion in seismic work to be done by January 1, 2020
  - did almost 16,000 reviews in 2013; about 68% done within about first five days
  - owners must now sign for the $250 fee, so are becoming aware of the # of Post-Approval Documents (PADs) being produced
  - The industry is not much inclined to use the SB 1838 program
  - Work contracted out down 152% from last year, due to lack of large projects.
  - John Donelan provided Fire Life Safety training for all FDD staff.

Meeting Date: March 12, 2014; Sacramento

OVERVIEW OF TOPICS

- Facilities Development Division Update – Paul Coleman, FDD Deputy Director (continued)
  - % of projects submitted through the Electronic Client Access online is improving
  - to obtain a field review of a PAD or new project, a project must be summited in Electronic Client Access.
  - For 2013, FDD stayed within the revenues collected.
  - The responses from the Quality of Service Survey brought an overall rating of 3.5 (C+). FDD scored highest in providing a professional level of service, and lowest in providing clear answers to questions.
  - FDD is in the process of doing an Operational Strategic Plan.
  - There was discussion on the large demographic changes taking place in California's population and the multi-cultural needs that affect how facilities should be structured – there are different takes on health care, care delivery and standards of care, including the role of family in health care delivery.

Meeting Date: March 12, 2014; Sacramento

OVERVIEW OF TOPICS

- Facilities Development Division Update – Paul Coleman, FDD Deputy Director (continued)
  - expressed concern that decreased personal interaction is a problem with electronic plan review. FDD seeks to ensure that communication – one of OSHPD's core values – is never lost in the process.
  - FDD is investing in technology to improve efficiency and effectiveness, as well as to reduce the cost of business processes.
  - FDD is considering whether the 60/30/30 goal is right for every project; FDD is looking at optimizing the processes based on project type.
  - FDD has set three primary objectives for 2014:

✓ Continue expanding Electronic Plan Review capabilities.
✓ Continue to expand the Standard Details. They have all been updated to the 2013 code.
✓ Continue to develop over-the-counter and over-the-computer capabilities.

Meeting Date: March 12, 2014; Sacramento

OVERVIEW OF TOPICS

- SB 90 and SB 499 Update – Roy Lobo, FDD Structural Services Section

- the statute requires for the work to be done by 2020. By that time all hospitals should have no SPC-1 buildings
  - discussed 2013 SB 499 anticipated completion dates for the buildings
  - discussed SB 499 Method of Compliance (Retrofit, Rebuild, Replace, and Remove) for the buildings in the context of timelines.
  - comparisons of SB 90 and SB 499 data.

Meeting Date: March 12, 2014; Sacramento

OVERVIEW OF TOPICS

- Regulations Update – Glenn Gall, FDD Building Standards Unit
  - Building Standards Commission's timeline for development of the supplement for the 2013 codes; this cycle is somewhat of a maintenance cycle, more than a major code revision.
  - OSHPD is starting to align its codes in preparation for national code making and the HBSB Code Advisory Committee will look at the vast majority of OSHPD's proposed amendments
  - changes in Chapter 1224 better distinguish Imaging Services versus Diagnostic and Procedural Integration of Imaging Services
  - OSHPD aligned its requirements with Title 22 for ICU modular toilet fixtures
  - handwashing fixtures definition has shifted to the plumbing code; problems encountered with sensor-operated handwashing fixtures in particular are still being clarified
  - changes in Chapter 1225 are in response to the pilot small house skilled nursing facilities program.
  - change to the Electrical Code deletes an OSHPD amendment

Meeting Date: March 12, 2014; Sacramento

OVERVIEW OF TOPICS

- Regulations Update – Glenn Gall, FDD Building Standards Unit (continued)
  - Correctional Treatment Center requirements are updated to align with the updated 1224 requirements.
  - OSHPD is removing the year indication in the Plumbing Code so that it doesn't get out of sync with what is also being adopted by the Fire Marshall's office.
  - PIN 55, OSHPD Special Seismic Certification Pre-Approvals, & PIN 56, Request for Opening Closed Projects, were posted in February.
  - CANs are applicable to the code cycle under which they are written. Sometimes clarifying the code cancels the need for the CAN; many CANs do not go forward with a new code.
  - CAN 2 is new. It is a standing CAN, formerly CAN 1-7-103, that explains OSHPD's jurisdiction. It applies to all projects and all code cycles.
  - OSHPD has a proposed update for CAN 2-11B, Accessibility.
  - CAN 2-102.6, Remodel, has been updated and posted under the 2013 CANs.
  - CAN 1-7-2100, Clinics, has a clarified flowchart and updated language.
  - Facility Guidelines Institute (FGI) guidelines coming soon, reflecting changing demographics

Meeting Date: March 12, 2014; Sacramento

OVERVIEW OF TOPICS

- Questions and Answers
- This report constitutes a MOTION to the BOARD and must be SECONDED by a Board Member that does not serve on the Committee for further ACTION.

This page left intentionally blank.

EDUCATION AND OUTREACH COMMITTEE

REPORT FOR NOVEMBER 19, 2014

by
ARLEE MONSON - COMMITTEE CHAIR
ERIC JOHNSON - COMMITTEE VICE CHAIR

COMMITTEE MEMBERS:
JOHN DONELAN
JOHN EGAN
LOU GILPIN
BERT HURLBUT
SCOTT KARPINEN

JOE LA BRIE, CONSULTING MEMBER

PAUL COLEMAN - OSHPD
CHRIS TOKAS – OSHPD
LORIN NEYER – OSHPD
GARY DUNGER - OSHPD

COMMITTEE MEETING REPORTS OF

- **May 1, 2014**
- **June 18, 2014**
- **August 13, 2014**
- **September 10, 2014**

COMMITTEE MEETING REPORTS OF

- **May 1, 2014 Topics of Discussions**
  - **Makeup Seminar for "Tips From the Experts" in Sacramento on May 30, 2014**
  - **"All You Need to Know" Seminar**
    - **2013 CAC – Functional Program Submittal**
    - **Non-Materially Alter**
    - **Standard Details**
    - **OPM, OSP and OPL Programs**
    - **eSP and Developing OSHPD Services**

COMMITTEE MEETING REPORTS OF

- **May 1, 2014 Topics of Discussions**
  - **Centers for Medicare/Medicaid Services (CMS) Potential Adoption of New Life Safety Code**
  - **Advanced Technologies Committee**

COMMITTEE MEETING REPORTS OF

- **June 18, 2014 Topics of Discussions**
  - **Feedback from "Tips From the Experts" Seminar**
  - **"Hot Topics" Seminar**
    - **Functional Program** by Glenn and Arlee
    - **Non-Materially Alter** by Scott and Gordon
    - **Standard Detail OPDs and OSPs** by Burt and Chris
    - **OPM and OPL Programs** by Roy and Chris
    - **eSP New Features** by Gary
    - **OSHPD Developing Processes** by Paul

COMMITTEE MEETING REPORTS OF

- **June 18, 2014 Topics of Discussions**
  - **Webinar on End of 2014 Submittal Requirements**
  - **CMS Adoption of New Life Safety Code**
  - **Advanced Technologies Workshops**
  - **IOR Workshops**

COMMITTEE MEETING REPORTS OF

- **August 13, 2014 Topics of Discussions**
  - **"Hot Topics" Seminar Preparation**
    - **Functional Program** by Glenn and Arlee
    - **Non-Materially Alter** by Scott and Gordon
    - **Standard Detail OPDs and OSPs** by Burt and Chris
    - **OPM and OPL Programs** by Roy and Chris
    - **eSP New Features** by Gary
    - **OSHPD Developing Processes** by Paul
    - **Live Demonstrations**

COMMITTEE MEETING REPORTS OF

- **August 13, 2014 Topics of Discussions**
  - **Webinar on End of Year Submittals – PIN 59**
  - **CMS and LSC – NFPA 99 Standard for Healthcare Facilities - Meeting October 23 in DC**
  - **Advanced Technologies Committee Meeting**
  - **IOR Workshops and SNF "How-to-Guides"**

COMMITTEE MEETING REPORTS OF

- **September 10, 2014 Topics of Discussions**
  - **"Hot Topics" Seminar Preparation**
    - **Functional Program** by Glenn and Arlee
    - **Non-Materially Alter** by Scott and Gordon
    - **Standard Detail OPDs and OSPs** by Burt and Chris
    - **OPM and OPL Programs** by Roy and Chris
    - **OSHPD Developing Processes** by Paul
    - **eSP New Features** by Gary
    - **Live Demonstrations** by Staff

The Hospital Building Safety Board and the Office of Statewide Health Planning & Development
Facilities Development Division presents:

Hot Topics! The Seminar

- One Day Workshop in Anaheim – October 9, 2014
- One Day Workshop in Concord – October 30, 2014

HIGHLIGHTS OF THE DAY

eSP Live Demonstrations by Gary Dunger
Google Earth Site Mapping by Hussain Bhatia
Virtual OTC with Smart Boards by Ali Sumer
Auto Codes by Paul Coleman
"Poking the OSHPD Bear" by Gordon Oakley

COMMITTEE MEETING REPORT OF NOVEMBER 19, 2014

CONCLUSION

- **QUESTIONS?**
- **This Report constitutes a MOTION to the BOARD and must be SECONDED by a Board Member that does not serve on the Committee**

This page left intentionally blank.

STANDARD DETAILS COMMITTEE

May 15, 2014

by
Bert Hurlbut: COMMITTEE CHAIR
Michael O'Connor: COMMITTEE VICE CHAIR

COMMITTEE MEMBERS:
Rami Elhassan
Eric Johnson
Scott Karpinen
Bruce Macpherson
Arlee Monson

Kale Wisnia: CONSULTING MEMBER

Paul Coleman
Brett Beekman
Gary Dunger
Mohammad Karim
Chris Tokas

PART 1: MEETING REPORTS:

- Meeting Date: May 15, 2014

Meeting Date: May 15, 2014
OVERVIEW OF TOPICS

- Fire Life Safety Details

Meeting Date: May 15, 2014
OVERVIEW OF MOTIONS

- Recommended that Fire Life Safety Details be reviewed by OSHPD (as noted) and approved for use as Standard Details.

Meeting Date: May 15, 2014
CONCLUSION

- The Fire Life Safety Details were approved by OSHPD and uploaded to the OPD Website in early October
- Current Details Summary:
  - Partitions: 40 Details
  - Ceilings: 33/39 Details
  - Fire Safing: 39 Details

- Questions and Answers
- This report constitutes a MOTION to the BOARD and must be SECONDED by a Board Member that does not serve on the Committee for further ACTION.

PART 2: 2015 Planning:

- Priorities: Update and maintain partition, ceiling and fire safety details
- Meeting Schedule: One mid year, one at end of year

CONCLUSION / DISCUSSION / Q&A

This page left intentionally blank.

ADMINISTRATIVE PROCESSES AND CODE CHANGES COMMITTEE

November 19, 2014

by
Scott Karpinen, COMMITTEE CHAIR
John Donelan, COMMITTEE VICE CHAIR

COMMITTEE MEMBERS:
Enid Eck
Rami Elhassan
Henry Huang
Bruce Macpherson
Carl Scheuerman

CONSULTING MEMBERS:
Mike Gritters

OSHPD STAFF:
Gary Dunger
Glenn Gall
Ramin Sadr

MEETING REPORTS:

- Meeting Date: June 26th, 2014
- Meeting Date: September 23rd, 2014

Meeting Date: 6/26/2014:
OVERVIEW OF TOPICS

- Policy Intent Notice for Testing Laboratories (PIN 58)
- Review Standard Operating Procedure and Reporting Form for IOR Performance Observation
- Discussion of “Financial Capacity” PIN/CAN to provide direction to hospitals who applied for relief under SB-90.

Meeting Date: 6/26/2014:
OVERVIEW OF MOTIONS

- **Motion 1:** The committee voted unanimously to endorse PIN 58, with amendments to be made based on comments given within the meeting.

- **Motion 2:** The committee voted unanimously to endorse the Standard Operating Procedure: Use of Observation of IOR Performance of Duties Form, including the additional copy recipients.

- **Motion 3:** The committee voted unanimously to endorse the concepts presented for the Financial Capacity PIN for SB 90 extension qualification, to be amended by concepts discussed during the meeting and recorded in the report.

Meeting Date: 6/26/2014:
CONCLUSION

- Questions and Answers
- This report constitutes a MOTION to the BOARD and must be SECONDED by a Board Member that does not serve on the Committee for further ACTION.

Meeting Date: 9/23/2014:
OVERVIEW OF TOPICS

- ASHRAE 170 Presentation
- 2016 Code Amendments

Meeting Date: 9/23/2013:
OVERVIEW OF MOTIONS

- **No Motions.**

Meeting Date: 9/23/2013:
CONCLUSION

- Questions and Answers
- This report constitutes a MOTION to the BOARD and must be SECONDED by a Board Member that does not serve on the Committee for further ACTION.

PART 2: 2015 Planning:

- Priorities
- Goals
- Milestones
- Meeting Schedule

Hospital Building Safety Board
2015 Planning

PRIORITIES:

- Assist OSHPD with 2016 Code Amendments.

Hospital Building Safety Board
2015 Planning

GOALS:

- Assist OSHPD with 2016 Code Amendments
- Assist OSHPD with PIN's and CAN's

MILESTONES:

- April 1st, 2015 – Initial Submittal to CBSC
- November 15th, 2015 – Final Submittal to CBSC

MEETING SCHEDULE:

- TBD

CONCLUSION / DISCUSSION / Q&A

INSTRUMENTATION COMMITTEE

OCTOBER 29, 2014

by
LOU GILPIN, CHAIR
JOHN EGAN, VICE CHAIR

COMMITTEE MEMBERS:
RAMI ELHASSAN
TRAILER MARTIN
SIMI NAASEH
BRIAN SPINDLER

CONSULTING MEMBERS
MOH HUANG
DONALD JEPHCOTT (in absentia)
TONY SHAKAL

EX OFFICIO
TIM MCCRINK

OSHPD STAFF
CHRIS TOKAS
ROY LOBO

HBSB Staff
LINDA JANSSEN
CATHY KANE
EVETT TORRES

PART 1: MEETING REPORTS:

- Last Meeting Date: 29 OCTOBER 2013

  - Annual Review of Hospitals Instrumented and prioritization of future installations

Meeting Date: 29 October 2014:
OVERVIEW OF TOPICS

- OSHPD Briefing by Roy Lobos & Chris Tokas
- Annual Report – OSHPD/CSMIP by Moh Huang & Tony Shakal
- New Hospital Instrumentation - Probabilistic Seismic Hazard Map Tim McCrink, CGS
- Discussion of Candidate hospitals and Reorganization of existing priorities
- Early Earthquake Warning Systems - Presentation of Testimony before State Assembly by Paul Coleman, FDD Deputy Director

Meeting Date: 29 October 2014:
OVERVIEW OF MOTIONS

- To reprioritize (1) Millers Children's Hospital, Long Beach & (2) Presbyterian Hospital, Whittier

Recorded Events

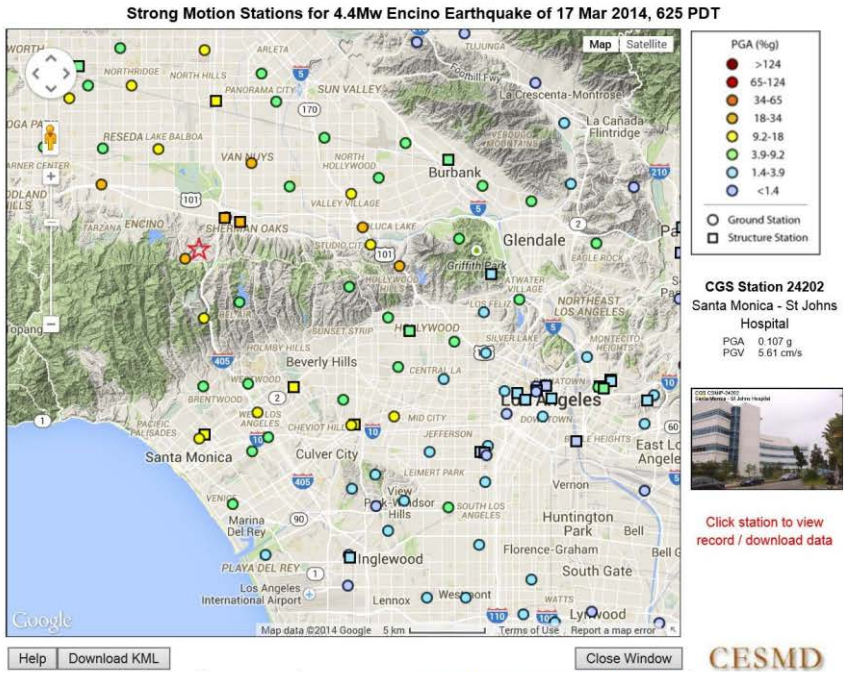

Figure 1. The interactive map at the CESMD, at www.strongmotioncenter.org, showing the location of the epicenter and of the strong-motion stations that recorded the M4.4 Encino earthquake of March 17, 2014. The colors of the dots or squares indicate the level of peak ground accelerations. The photo and recorded PGA and PGV at St. John's Hospital in Santa Monica are shown on the right side of the map by moving the mouse cursor over the square for the Hospital on the map.

M4.1 Ferndale Earthquake of December 17, 2013

Name of Hospital	Type of Structure	Epicentral Distance (km)	Max. Horizontal Acceleration (%g)		
			Ground	Base	Structure
Eureka – St. Joseph Hospital	4-story concrete shear wall	35.4	0.007	0.006	0.031

M6.8 Ferndale Earthquake of March 9, 2014

Name of Hospital	Type of Structure	Epicentral Distance (km)	Max. Horizontal Acceleration (%g)		
			Ground	Base	Structure
Eureka – St. Joseph Hospital	4-story concrete shear wall	83.9	0.041	0.027	0.114
Crescent City - Sutter Coast Hospital	1-story steel CBF frame	131.2	0.013	0.014	0.021

M4.4 Encino Earthquake of March 17, 2014

Name of Hospital	Type of Structure	Epicentral Distance (km)	Max. Horizontal Acceleration (%g)		
			Ground	Base	Structure
Santa Monica – St. John's Hospital	5-story steel braced frame/concrete shear walls with isolation	11.6	—	0.107	0.135
Los Angeles – Good Samaritan Hospital	8-story concentrically-braced steel frame	22.2	No FF	0.015	0.039
Los Angeles – LAC+USC Hospital (IP)	9-story eccentrically-braced steel frame	27.2	No FF	0.046	0.066
Los Angeles - USC Hospital Addition	9-story concentrically-braced steel frames	27.5	No FF	0.032	0.043
Los Angeles - USC Hospital	7-story steel braced frames with isolation	27.5	No FF	0.014	0.029
Simi Valley - Simi Valley Hospital	2-story steel moment frames	29.4	—	0.020	0.071
Pasadena – Huntington Hospital	7-story steel moment frames	30.6	No FF	0.011	0.027
Oxnard – St. John's Hospital	4-story steel moment frames	62.3	—	0.004	0.019

M5.1 La Habra Earthquake of March 28, 2014

Name of Hospital	Type of Structure	Epicentral Distance (km)	Max. Horizontal Acceleration (%g)		
			Ground	Base	Structure
Los Angeles – USC Hospital	7-story steel braced frames with isolation	30.0	No FF	0.011	0.052
Los Angeles – LAC+USC Hospital (IP)	9-story eccentrically-braced steel frame	30.1	No FF	0.025	0.093
Ontario – Kaiser Hospital	5-story steel BRB frames	30.6	0.042	0.032	0.116
Newport Beach – Hoag Hospital East Tower	7-story steel moment frames with isolation	34.1	No FF	0.013	0.052

Hospitals Instrumented

San Francisco – General Hospital (Trauma Center)
(CSMIP Station No. 58574)

Aerial view of the instrumented building (from www.webcor.com).
The instrument at free-field location will be installed in 2015.

View of west side of the instrumented building from Potrero Ave.
(from www.sfexaminer.com)

Hospitals Instrumented

San Diego – Sharp Memorial Hospital (South Tower)
(CSMIP Station No. 03546)

View of the instrumented building at Sharp Memorial Hospital.

San Diego – I805 & Mesa College
(CSMIP Station No. 03544)

View of the reference free-field site at Sharp Memorial Hospital.

Redlands – Community Hospital
(CSMIP Station No. 23548)

View of the instrumented building at Redlands Community Hospital.

Redlands – Terracina & W Fern
(CSMIP Station No. 123547)

View of the reference free-field site at Redlands Community Hospital.

Hospitals Instrumented

Redlands – Community Hospital
(CSMIP Station No. 23548)

View of the instrumented building at Redlands Community Hospital.

Redlands – Terracina & W Fern
(CSMIP Station No. 123547)

View of the reference free-field site at Redlands Community Hospital.

Meeting Date: 29 October 2014
CONCLUSION

- Questions and Answers
- This report constitutes a MOTION to the BOARD and must be SECONDED by a Board Member that does not serve on the Committee for further ACTION.

PART 2: 2014 Planning:

- Priorities – consider new candidate hospitals as they are presented and as earthquake events occur
- Meeting Schedule: Next Meeting 29 October 2015

MEETING SCHEDULE:

- Annual Meeting Date 29 October 2015

CONCLUSION / DISCUSSION / Q&A

Zero-Energy Building

Image courtesy of Salvatore Vuono at FreeDigitalPhotos.net

Zero-Energy Building

- Zero-Energy Building (ZEB)
- Zero Net Energy (ZNE) Building
- Net-Zero Energy Building (NZEB)
- Net Zero Building (NZB)

What is a ZEB?

- The total amount of energy used by the building is roughly equal to the amount of renewable energy created on the site on an annual basis

$$\frac{\text{Energy In} = \text{Energy Out}}{\text{Year}}$$

A building with zero net energy consumption

What is a ZEB?

- ZEBs also include the idea of:

  Exemplary building design to minimize energy requirements

- Simply Stated a ZEB is:

  A building that requires as little energy as possible, and will produce whatever energy it does need through renewable sources

Obtaining ZEB Status

- Design for Zero-Energy
  - Passive Solar
  - Thermal Mass
  - Daylighting
  - Prevailing Breezes
  - Solar Orientation
  - Shading
  - Geothermal
  - High Efficiency HVAC

Obtaining ZEB Status

- Build for Zero-Energy
  - High Efficiency Windows
  - Natural Ventilation
  - Solar Water Heating
  - Skylights
  - LED Lighting
  - Super Insulation
  - Efficient Appliances
  - And More

Obtaining ZEB Status

- Harvesting Energy vs. Conserving Energy
  - Harvesting is using the natural renewable energy provided at the site
  - Conserving is instituting techniques to use less energy
  - There must be balance
  - Heating energy consumption can be reduced by as much as 90% without using active energy harvesting

Obtaining ZEB Status

- Initial costs of active harvesting systems can be prohibitive if energy demand is not reduced.
- Adding solar panels to a conventional building will not achieve a Zero-Energy Building
- Occupant behavior must also be addressed to reduce energy demand

ZEB Past & Present

- The modern concept of ZEBs goes back to the 1970s when the first oil crisis raised awareness of the volatility of the oil supply.
- The current awareness of the impact that carbon has on climate change and that buildings are responsible for almost 50% of greenhouse gases has led to the expanded interest in ZEBs

An Interesting Chart

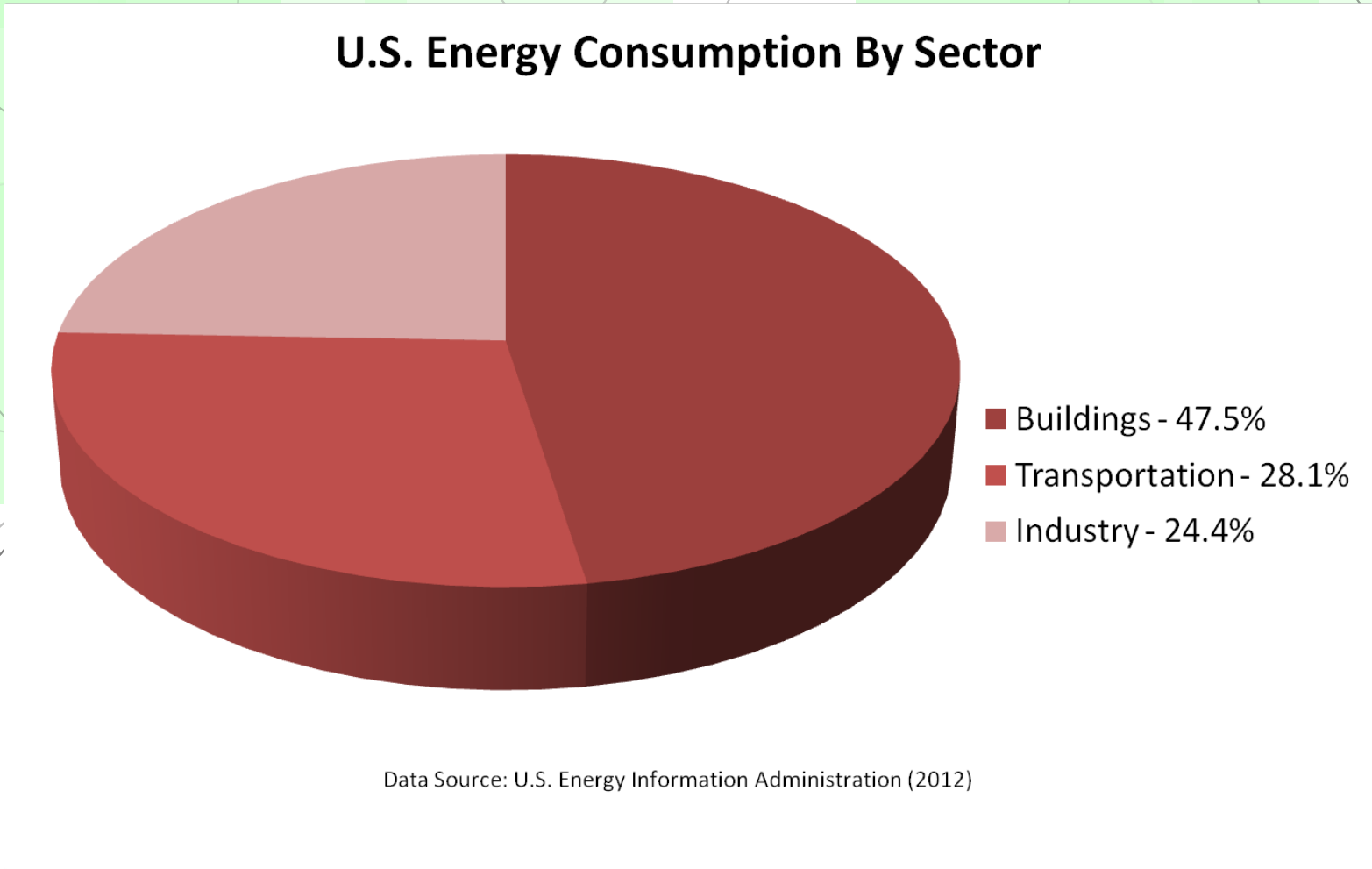

ZEB Initiatives

- California Zero Net Energy Goals
  - By 2020 all new low rise residential buildings will be ZNE
  - By 2025 fifty percent of all existing State buildings will be ZNE
  - Starting after 2025 all new State buildings and major renovations be designed for ZNE
  - By 2030 all new nonresidential buildings will be ZNE

ZEB Initiatives

- AIA 2030 Commitment
  - Increasing carbon reduction goals to achieve a carbon neutral built environment by 2030
  - Carbon neutral means using no fossil fuel GHG emitting energy to operate the building
  - The carbon reduction goals include:
    - 70% Fossil Fuel Reduction by 2015
    - 80% Fossil Fuel Reduction by 2020
    - 90% Fossil Fuel Reduction by 2025
    - 100% Fossil Fuel Reduction by 2030

ZEB Initiatives

“The AIA 2030 Commitment is a growing national initiative that provides a consistent, national framework with simple metrics and a standardized reporting format to help firms evaluate the impact design decisions have on an individual project's energy performance. To truly rise to meet the energy reduction goals of 2030, we have to apply the principles of sustainable design to every project from its inception and early design through project completion and ongoing building operations-not just those projects where our clients wish to pursue third party green building certification. The profession can’t meet radical building energy use reduction targets one project at a time and architects are embracing the challenge at hand by thinking differently about sustainable design.” http://www.aia.org/about/initiatives/AIAB081490

ZEB Initiatives

- AIA 2030 Commitment Status
  - Over 275 A+E firms participating in the pledge so far
  - 99 firms submitted reports for 2013
  - 2464 projects reported for 2013
  - 401 projects meeting 60% reduction target for 2013
  - 73 Zero Energy projects for 2013

Data obtained from 2013 Progress Report AIA 2030 Commitment

ZEB and Healthcare

- Health care accounts for 8% of U.S. carbon dioxide emissions
- Hospitals represent 3% of all commercial floor space and 11% of all commercial energy consumption
- Hospitals have more than 2.5 times the energy intensity and carbon dioxide emissions of commercial office buildings

ZEB and Healthcare

When it comes to energy use hospitals are

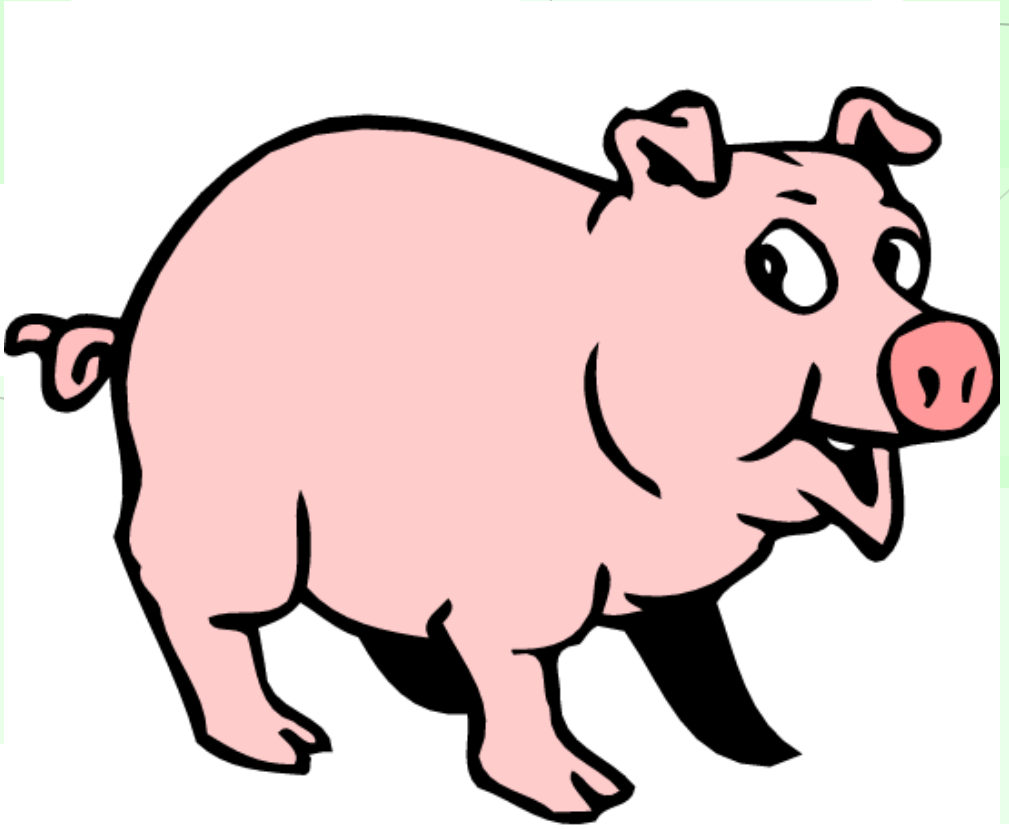

Another Interesting Chart

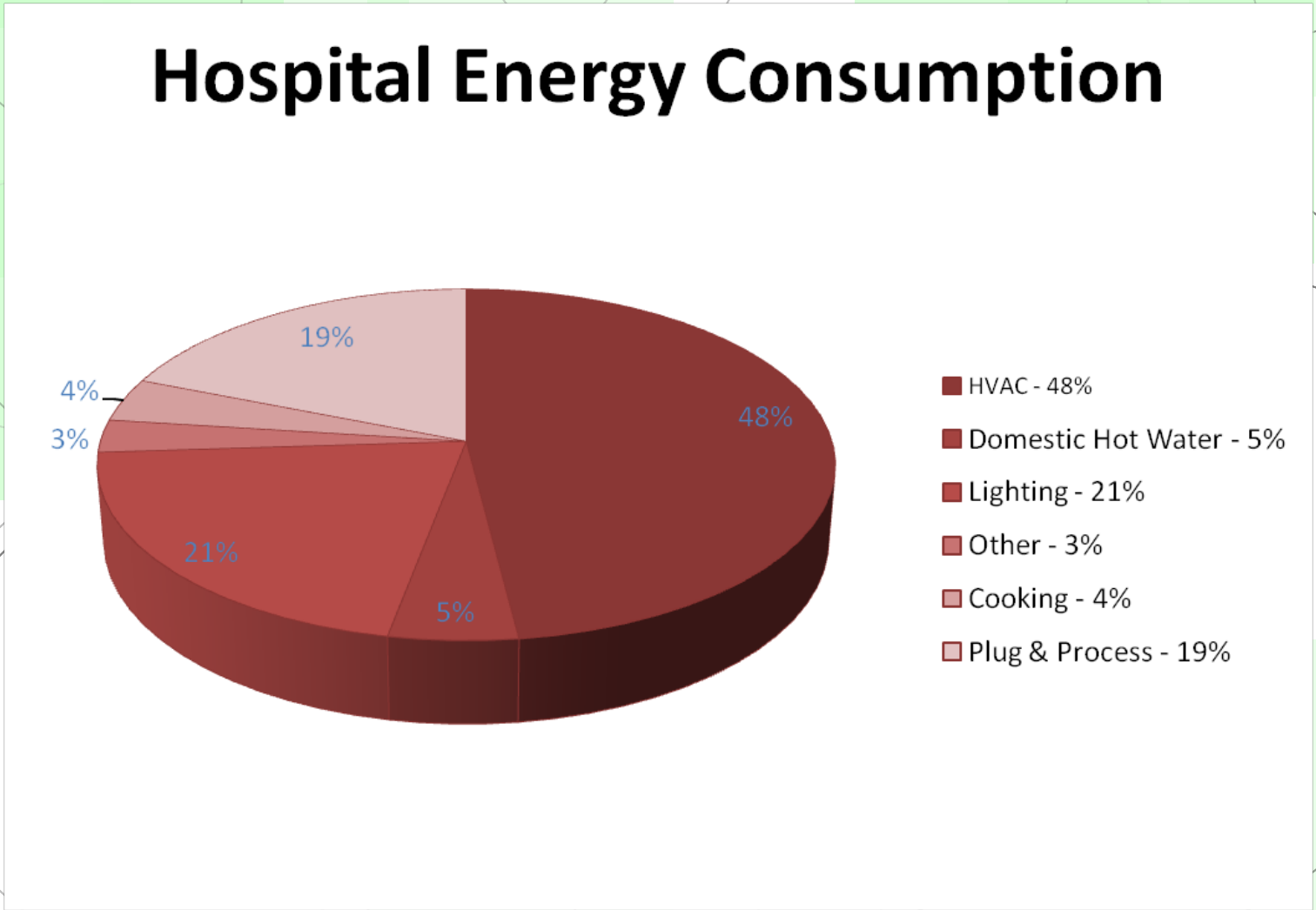

ZEB and Healthcare

- Is a Zero Energy healthcare building viable?
- The primary road block to a ZEB hospital is the large amount of equipment generating energy demand and shedding heat
- In order to come close to a ZEB hospital, design and construction must be rethought

ZEB and Healthcare

- Rethinking the Hospital is exactly what Kaiser Permanente wanted to do with their 2011 Small Hospital, Big Idea Competition
- Kaiser Permanente was looking for a near zero impact on the environment
- All of the finalists incorporated the use of renewable energy and conservation techniques

ZEB and Healthcare

- The Fort Irwin Replacement Hospital in the Mojave Desert is billed to be the first Net Zero Carbon Neutral hospital in the country
- Designed by Elerbe Becket with RLF and Turner Construction as the builder it is currently under construction
- It relies heavily on solar energy and used BIM to integrate and test energy saving scenarios

Another Initiative

- The U.S. Department of Energy in 2009 launched the Hospital Energy Alliance (HEA) as part of its Net-Zero Commercial Building Initiative
- The main goal of the HEA is to promote the use of clean energy in hospitals and healthcare facilities
- The HEA provides current information and tools supporting energy efficiency and renewable energy technologies

ZEB and Healthcare

- Achieving a Zero-Energy hospital building requires reducing energy demand and providing renewable sources
- High efficiency HVAC systems and lighting systems and day lighting will have the greatest impact on energy demand reduction
- Renewable energy sources are unique to the site but certainly wind and solar are available in much of California

ZEB and Healthcare

- Rethinking the Hospital building will entail radical design scenarios relative to the use of space and circulation, changing the floor plate and addressing how patients and staff use the building
- Integration of design and construction is vital, a healthy and inclusive design and construction team environment is necessary to achieve the efficiencies required

ZEB and Healthcare

Is a Zero Energy healthcare building viable?

It is only a matter of time

OSHPD
Office of Statewide Health Planning and Development

M6.0 South Napa, California Earthquake (American Canyon, CA) August 24, 2014

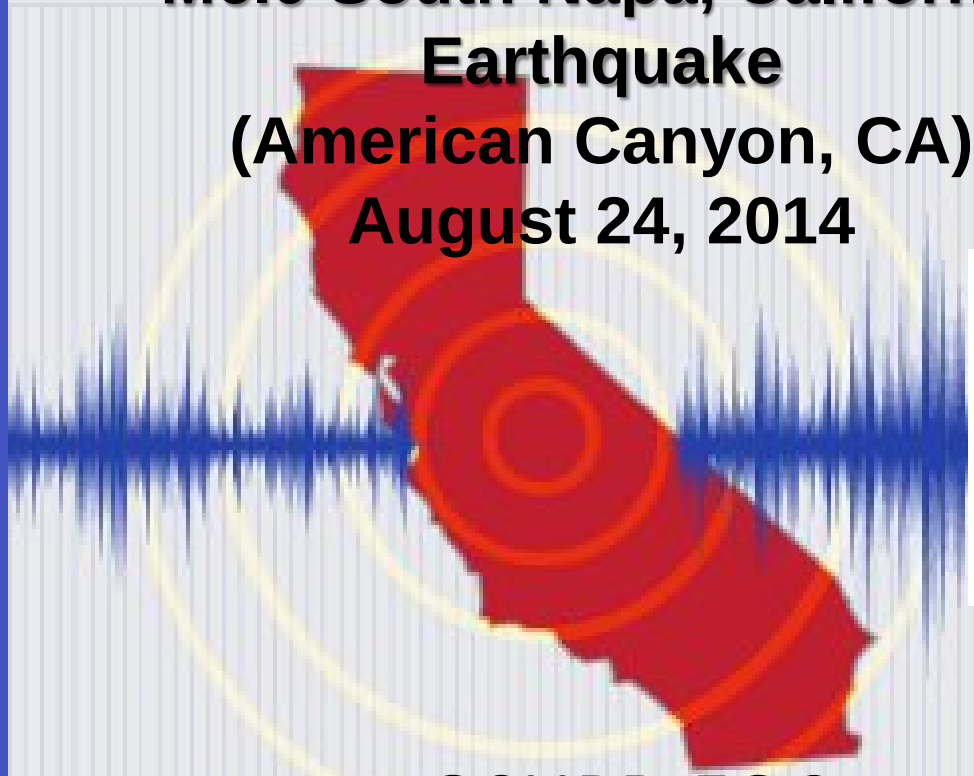

Emergency Operation Center

OSHPD EOC

Facilities Development Division

Time of Occurrence

- August 24, 2014
- at 3:20 a.m. Local time

Paul Kitagaki Jr. | Sacramento Bee

Time stood still

Earthquake Stats

- Magnitude 6.0 - moment magnitude (Mw)
- Distance from American Canyon, CA 4 miles NW
- Napa, CA -5 miles SSW
- Vallejo, CA - 9 miles NNW
- Santa Rosa, CA - 26 miles SE
- Depth 7.0 miles

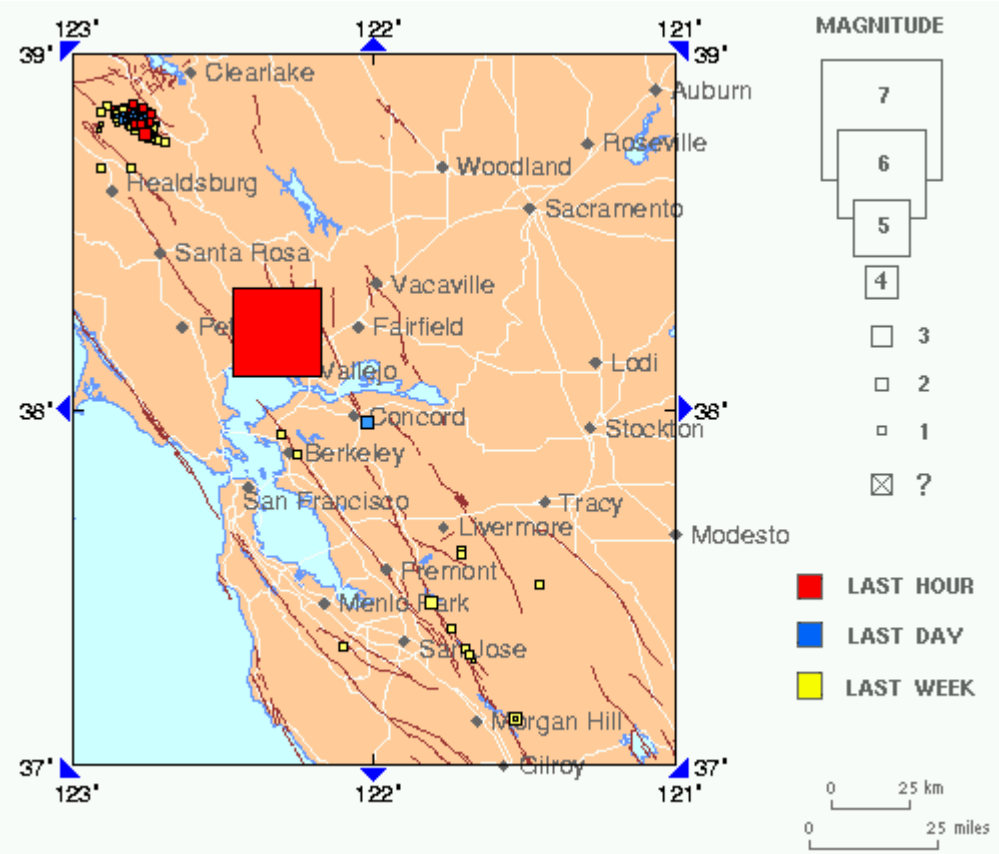

Franklin Fault or West Napa Fault?

- Quake originally attributed to the Franklin Fault
  - Inactive for thousands of years.
- After inspecting the damage, CGS declared quake occurred on the West Napa Fault, not the Franklin Fault.

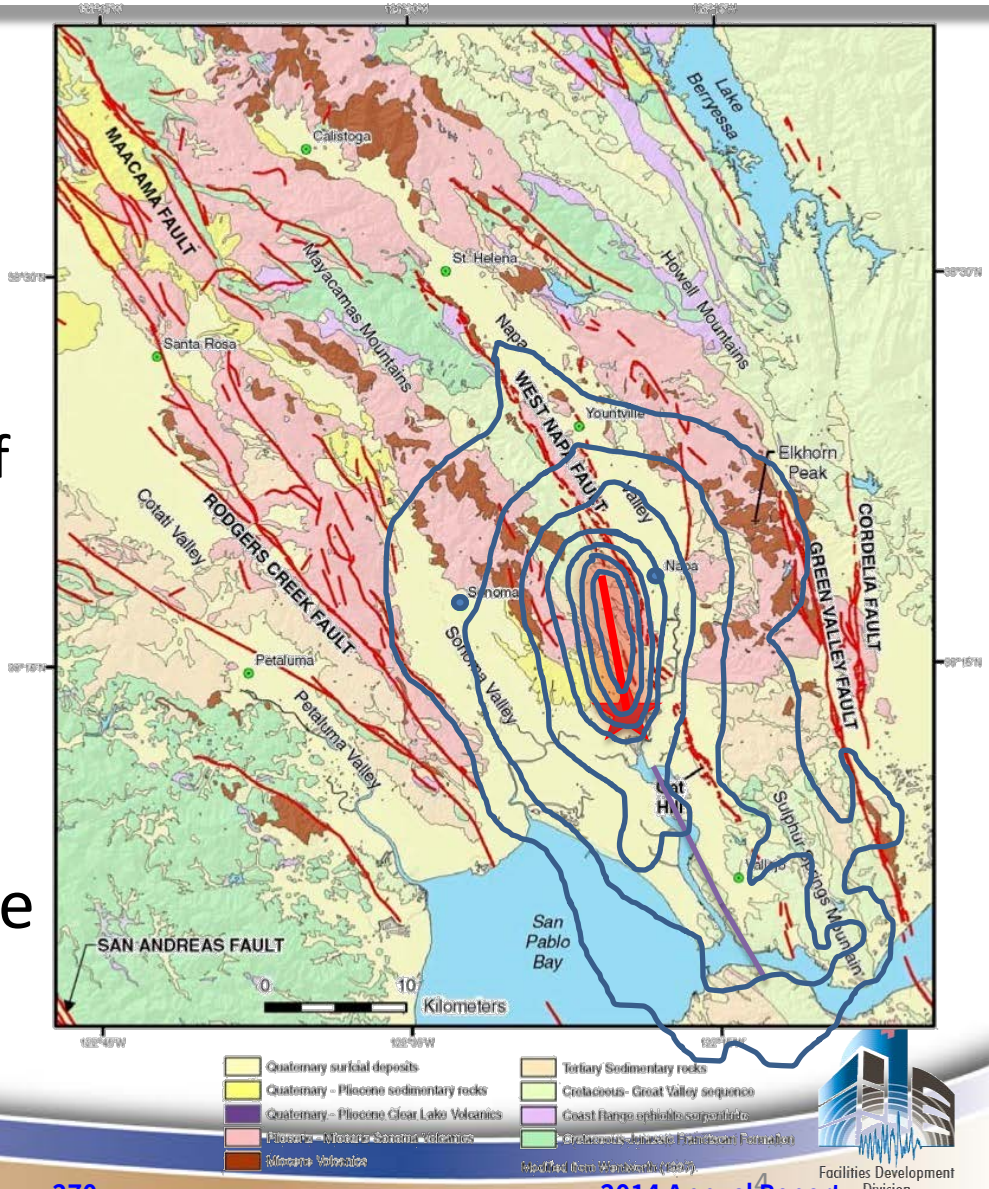

Napa Valley Seismicity

- The last earthquake to rattle the Napa Valley struck on Sept. 3, 2000.
  - M5.1 Magnitude
  - 10 miles northwest of Napa,
    - Near Yountville, previously unknown fault

Monday, September 4, 2000

143rd Year, No. 319

Napa quake: 40 hurt, 150 buildings damaged

5.2 temblor uncovers new fault in valley

SURPRISE IN WINE COUNTRY

Napa Valley Seismicity

- 2008 estimate of Bay Area earthquake probabilities
  - Conducted by scientific and engineering community
  - Does not include the West Napa Fault.

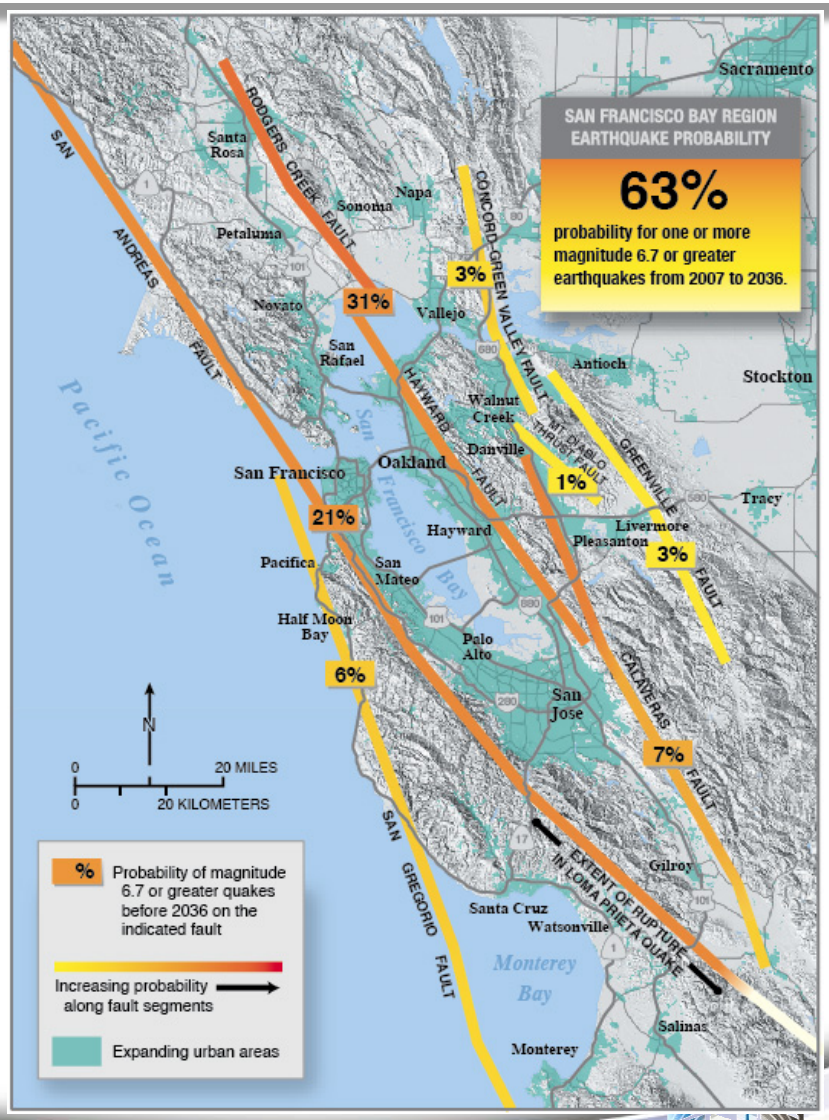

Why strong shaking in Napa?

- The actual earthquake rupture only lasted four seconds,
- The valley floor is lined with soft river soils that amplify earthquake waves.
- Fault zipped open from south to north, directing the earthquake energy toward the city

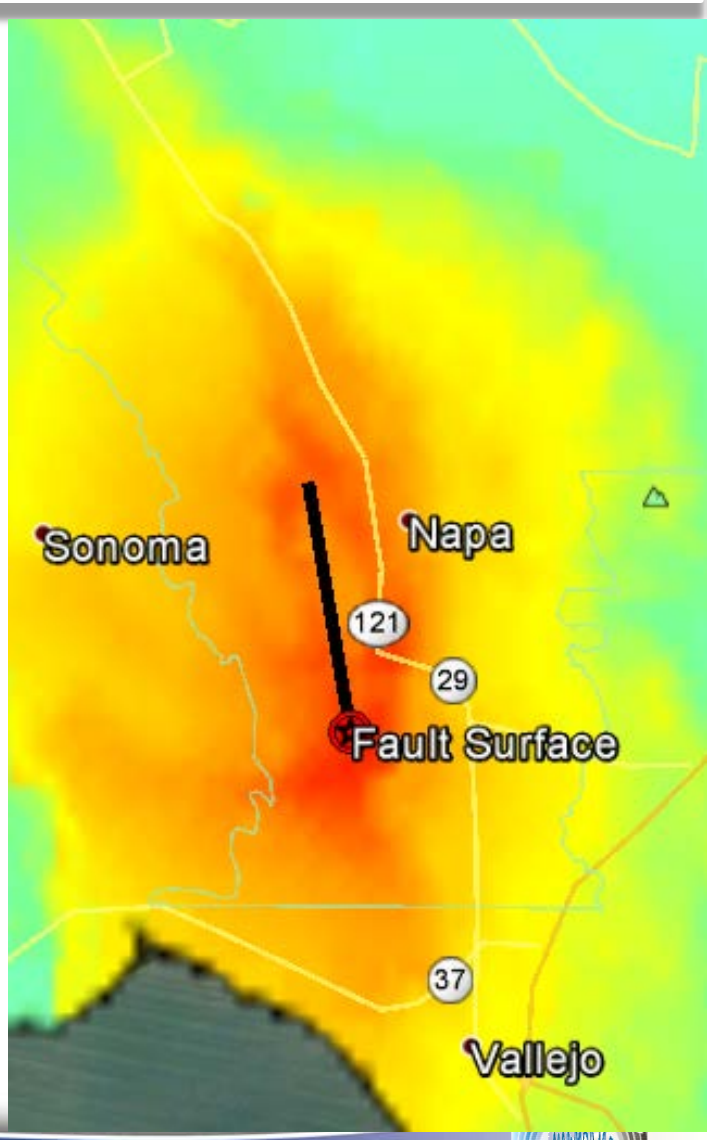

Sine wave motion?

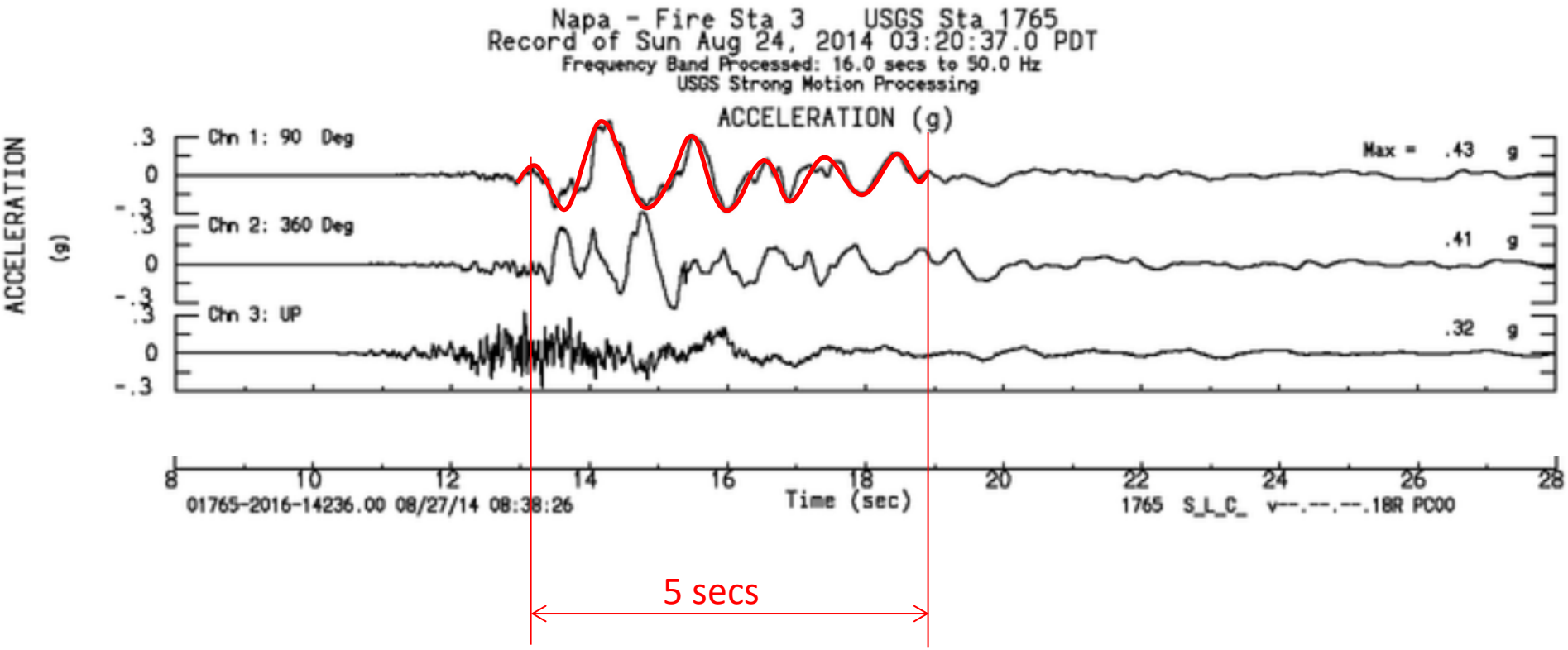

Shakemap - PGA

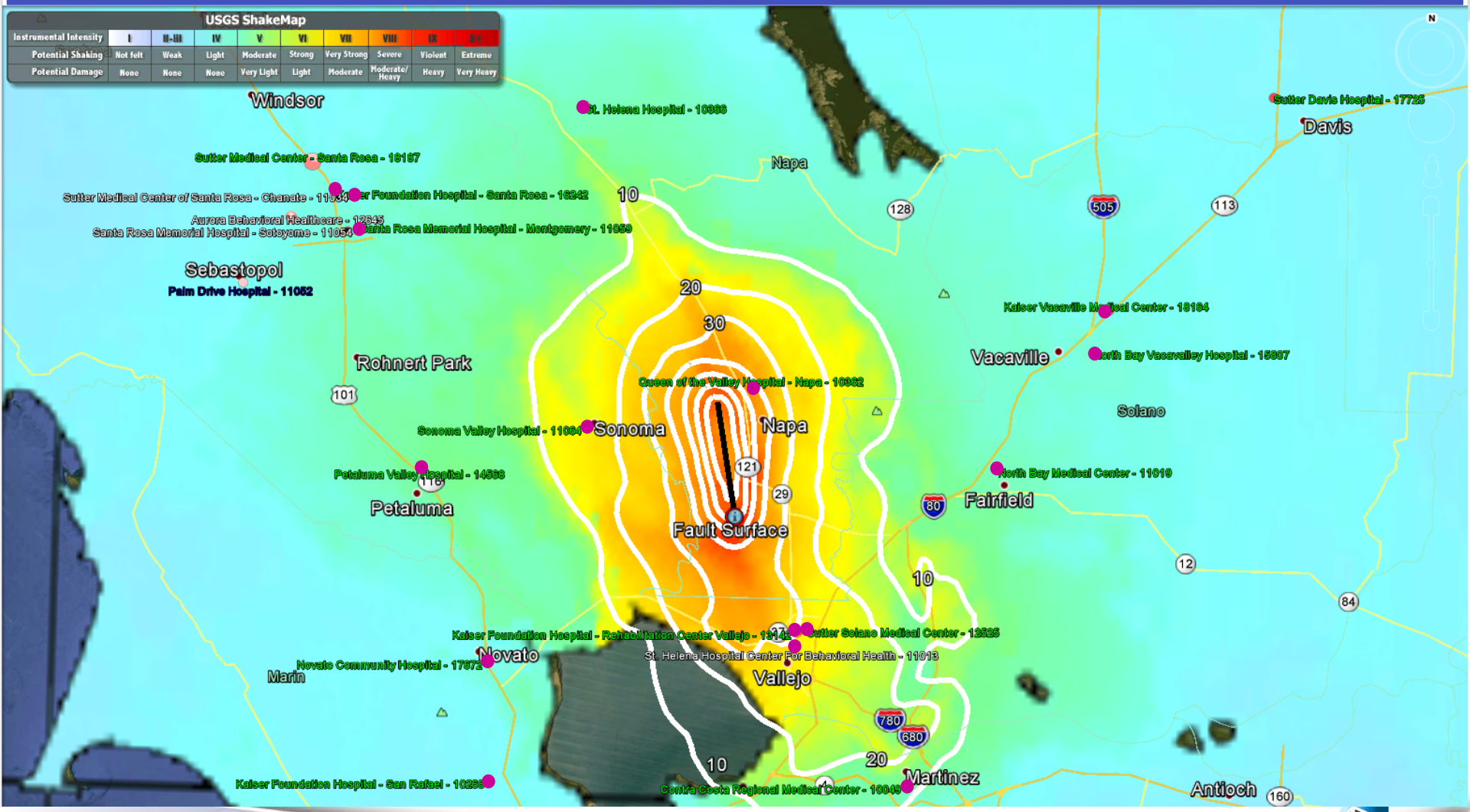

● Designates GAC Hospital

Aftershocks

- 65 aftershocks in 24 hrs
  - including four that were larger than 2.0 magnitude in Napa, ranging in magnitude from 2.5 to 3.6
  - Thirty to 70 small aftershocks could hit the area in the next week.

Geotechnical issues

Geotechnical Issues

- Surface fault rupture at northern part of Clos du Val Vineyard near 2121 Buhman Avenue (6.7 km NW of epicenter), showing measurement alignment along azimuth 090.
- Yellow engineer's scale shows measurement of 40 to 45 cm from base of thick wooden post; tape placed along southern edge of wooden posts aligned on east side of fault zone.

NSF-GEER

Geotechnical Issues

Damage to Transportation Systems

- Highway 12, Route 121, Route 29
  - damaged, with cracks that could cause flat tires
- Highway 37 : Roadway separated and concrete crumbled, buckling on an off-ramp

CBS - KPIX 5 San Francisco

Peter DaSilva, EPA

Damage to Transportation Systems

- City, County roads

Damage to Transportation Systems

- Bridges and ramps

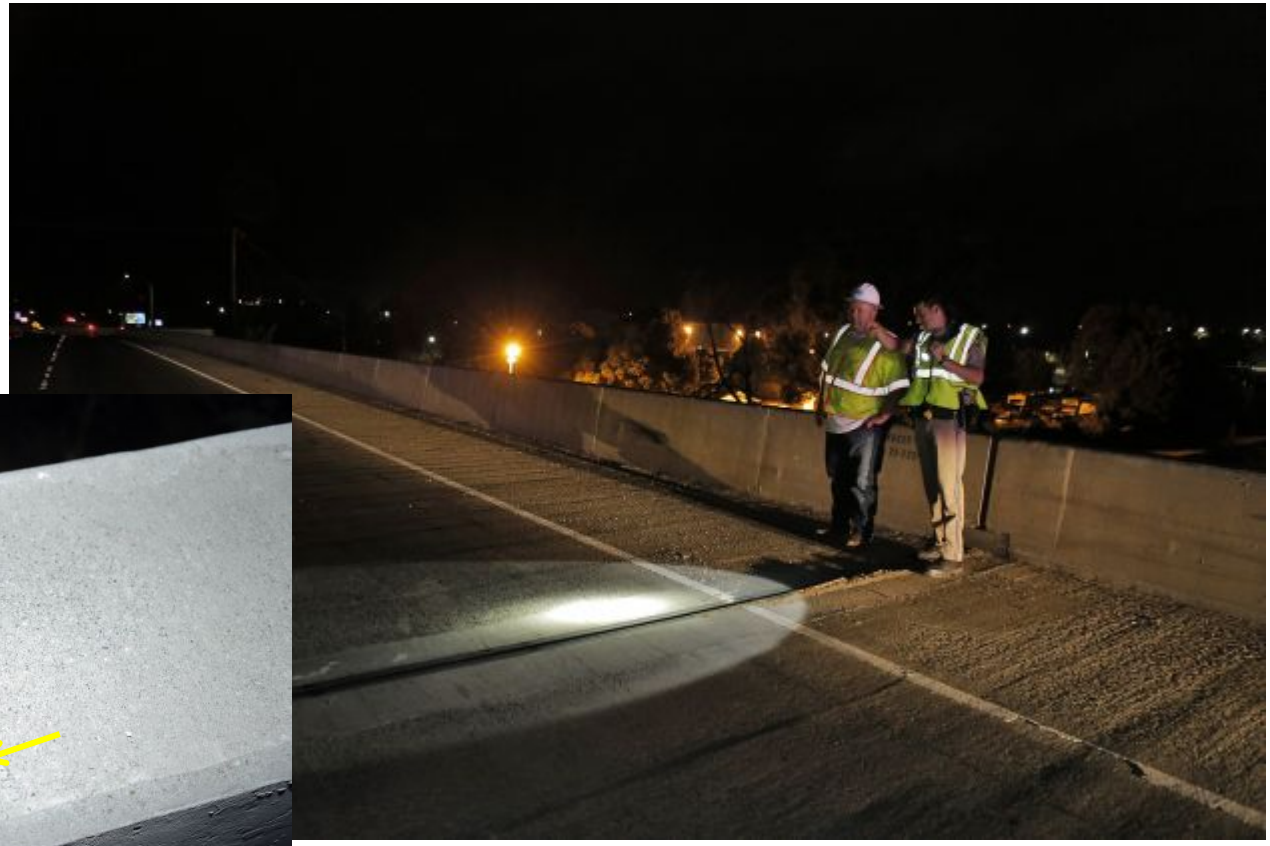

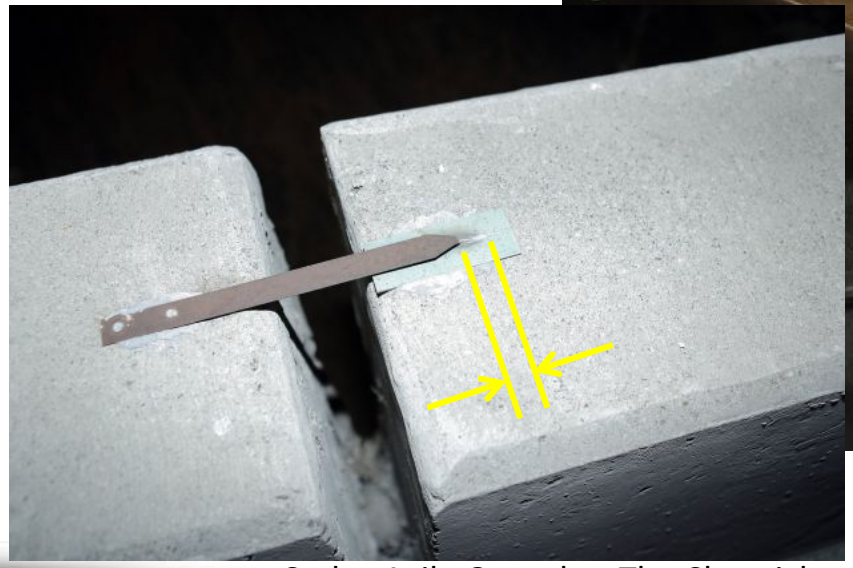

Carlos Avila Gonzalez, The Chronicle

Damage to the Electric Power Grid

- Electrical Power
  - Power lines down- 42,000 homes without power

Damage to the Water Grid

- Crews repaired 120 water main breaks in the aftermath of quake.
  - As quickly as one pipe fixed, another brakes.

The Chronicle SFGate

Justin Sullivan/Getty Images

Airport & Telecommunications

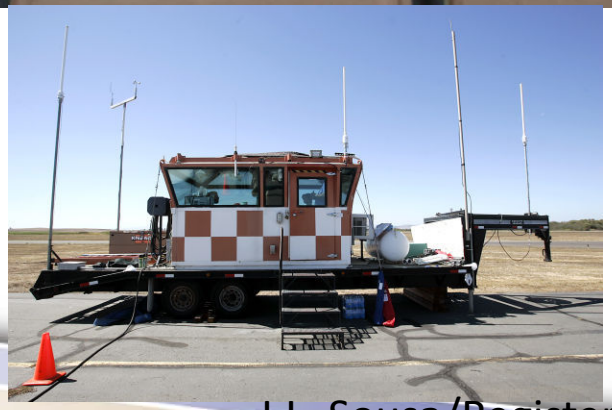

J.L. Sousa/Register

AT&T Building on Clay Street

Damage to URMs

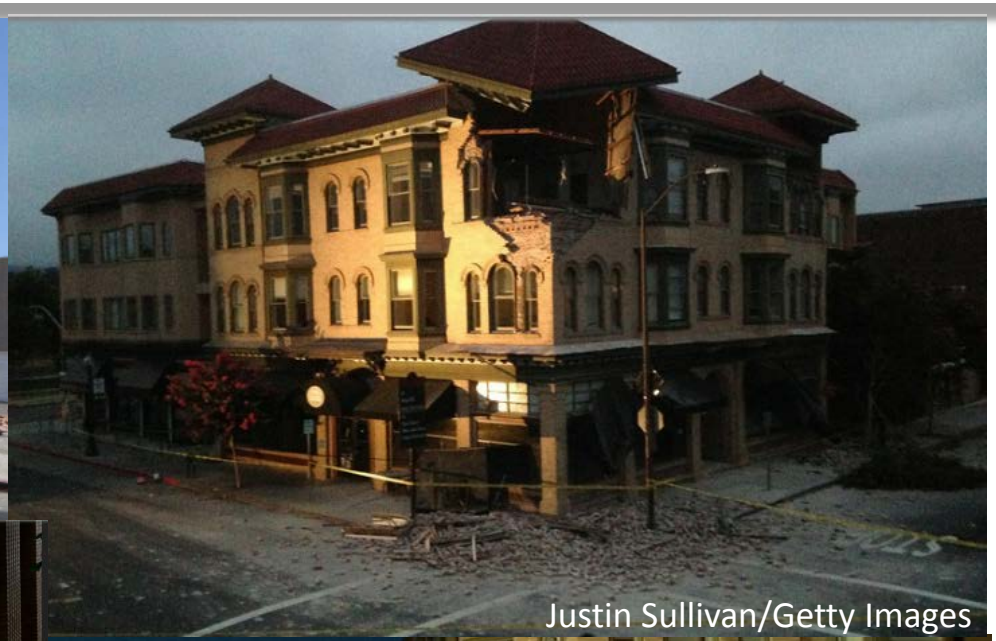

Justin Sullivan/Getty Images

Mercury News

K.Telleen

John Sumnicht

Alexandria Hotel

- Originally Built- 1910
- Construction – 3-story URM exterior bearing walls with interior wood post & beam framing.
- Area - 27,000sf
- Major Renovation & Addition - 1984

Alexandria Hotel

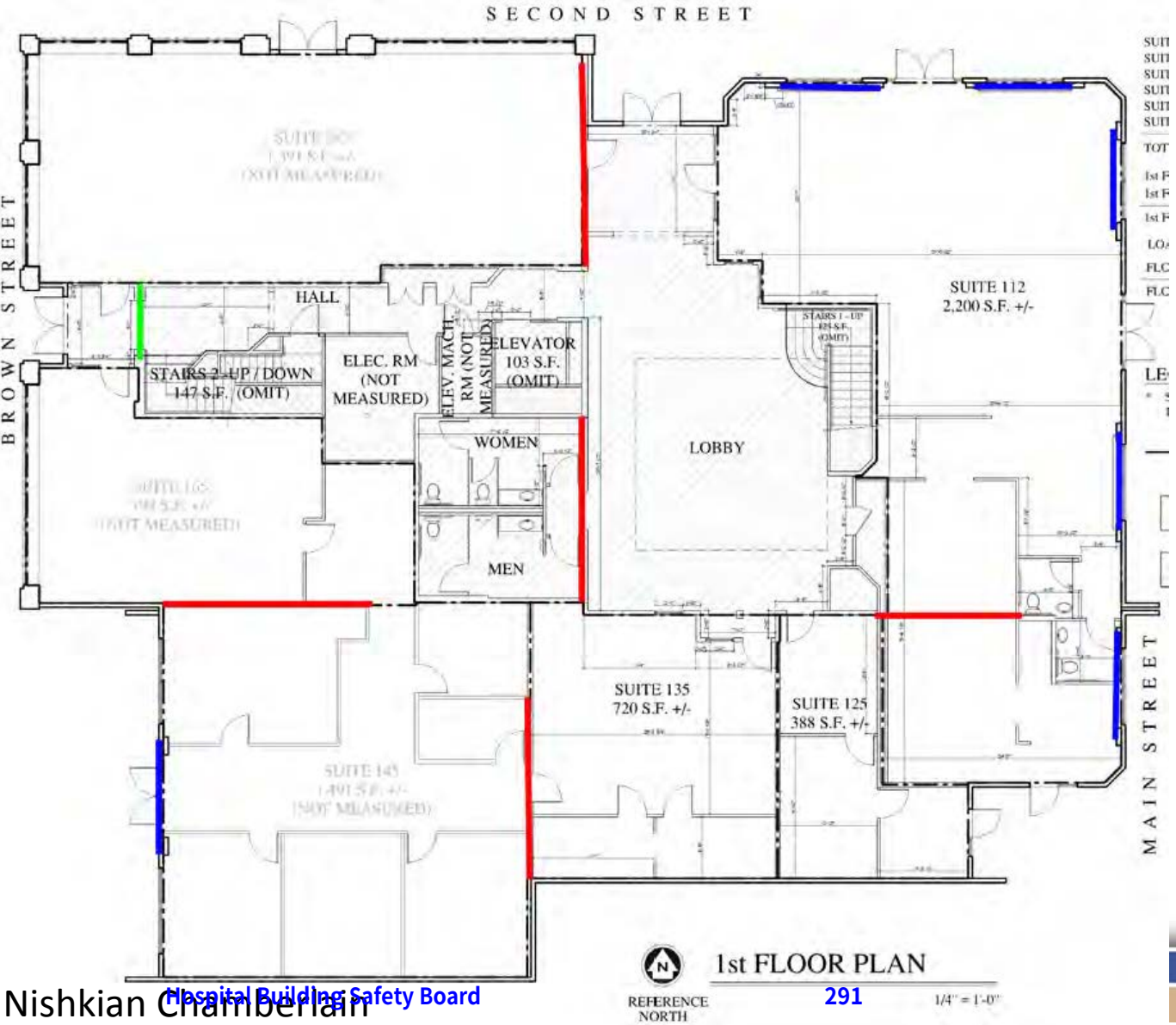

- 1984 Major Renovation
- New Frames added
- Red –Braced Frame
- Blue – Moment Frame
- Green – Hybrid Frame

URM Anchorage at Roof Popups

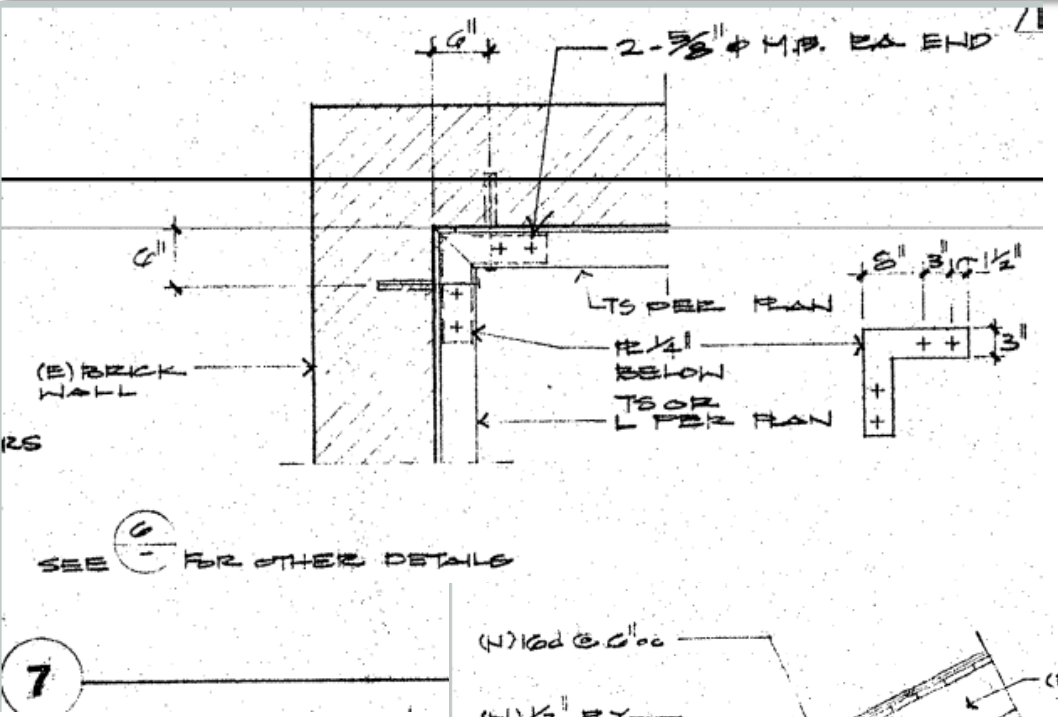

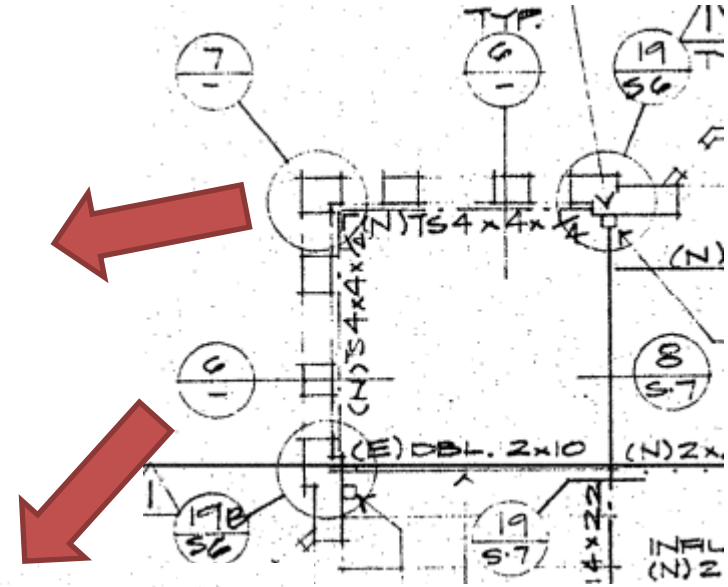

PLAN

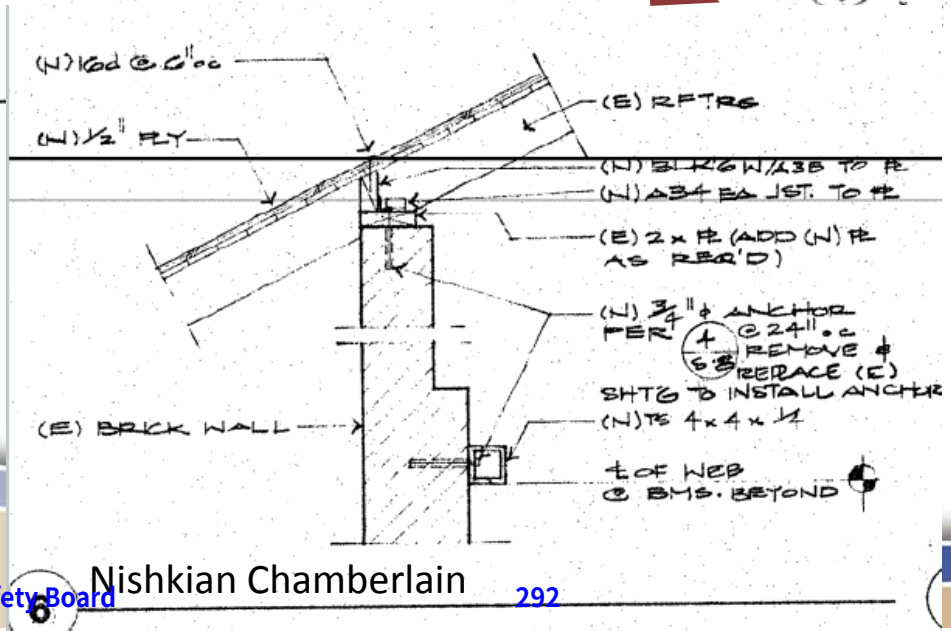

Brace a ....

Facilities Development Division

Retrofitted URMs

Bret Lizundia

Damage to Nonstructural Components

Damage to Suspended Ceilings-
2 story retail store

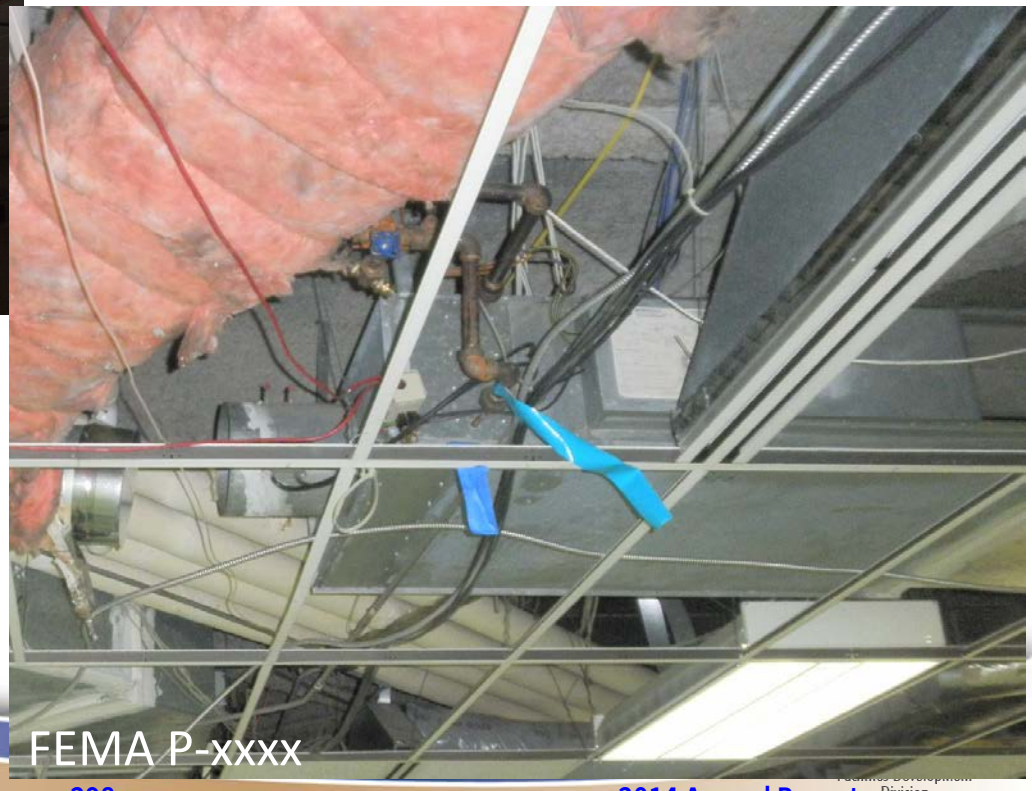

Damage to Piping Systems
Leaks where pipe entered in-line coils

Damage to Fire Sprinklers

FEMA P-xxxx

Damage to Residential Structures

ABC 7 News

USA Today

Peter Dasilva/European Pressphoto Agency

Damage to Mobile Homes

Fires

- Destroyed four homes (Mobile Homes) and damaged two
- 50 fires put out by the Napa Fire Department

Causes of Mobile Home Fire

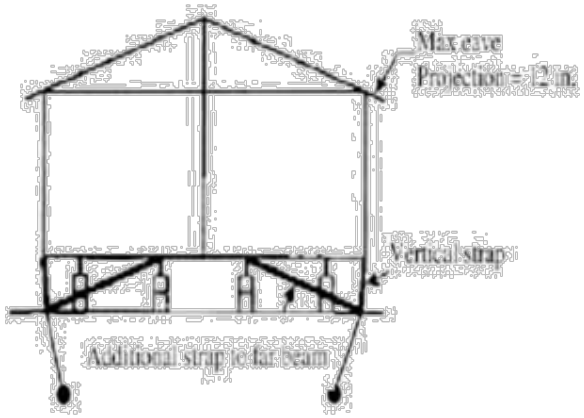

- No anchorage and seismic bracing
- Gas line

Apartments & Carports

Mercury News

EERI

Scott Strazzante, The Chronicle

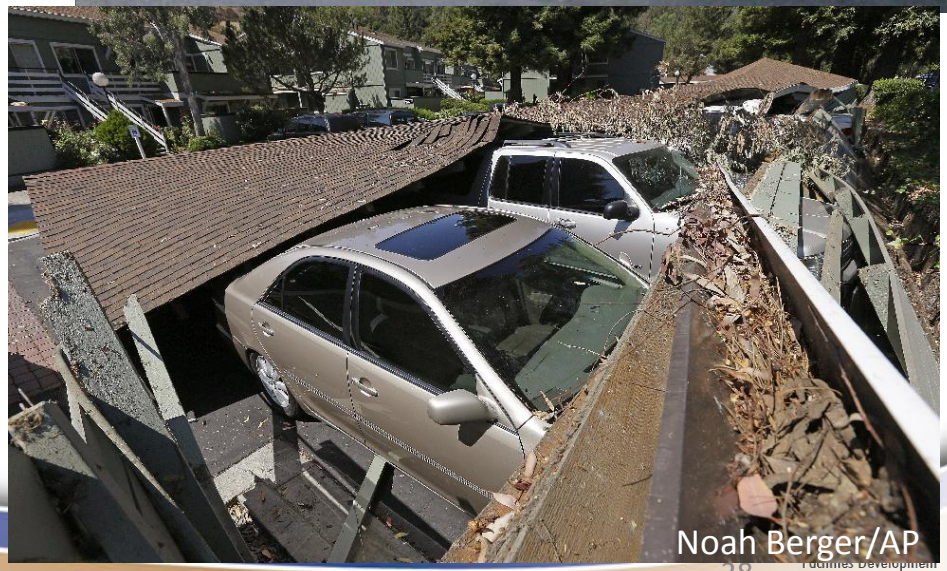
Noah Berger/AP

Winery Inventory Damage

Disruption

- Damage to Oil and Vinegar Taste room

Hospital Response

- Queen of the Valley Medical Center reported **208** patients treated or admitted
  - 17 were admitted and one person in critical condition.
    - 13-year-old boy was taken in serious condition to UC Davis Medical Center.
- St. Helena Hospital reported treating eight people as of 6 p.m. Sunday

Hospital Response

- Triage tents set up to

Queen of the Valle
Medical Center

OSHPD Response

- EOC Activated on 8/24/14 at 0408 hours
- EOC Personnel
  - EOC (Room 452)
    - Total = 13
  - Field Operations = 22
    - ACOs =7
    - DSE =7
    - FLSO = 3
    - SSE = 3
    - SArch =1
    - PSE =1

10 Teams @
Peak Assessment

OSHPD Response

- Facilities under OSHPD jurisdiction
  - 6 General Acute Care Hospital Facilities with 58 Buildings

Hospital Name	Epicentral Dist(miles)
Kaiser Foundation Hospital - Rehabilitation Center Vallejo	7.1
Sutter Solano Medical Center	7.2
Queen of the Valley Hospital - Napa	7.7
St. Helena Hospital Center For Behavioral Health	7.7
Sonoma Valley Hospital	9.4
North Bay Medical Center	14.8

n of the Valley nt Motion

Network:
NP
Station ID:
1765
Name:
CA:Napa;FS 3
Location:
Lat:
38.3305
Lon:
-122.3184
Distance to source:
2.6 km
Intensity:
9.1
PGA:
45.07 %g
PGV:
86.87 cm/sec
PSA 0.3sec:
61.05 %g
PSA 1.0sec:
102.09 %g
PSA 3.0sec:
24.08 %g

Network:
NC
Station ID:
N016
Name:
Main St Napa
Location:
Lat:
38.2988
Lon:
-122.2848
Distance to source:
3.9 km
Intensity:
7.7
PGA:
64.68 %g
PGV:
34.42 cm/sec
PSA 0.3sec:
119.78 %g
PSA 1.0sec:
41.67 %g
PSA 3.0sec:
14.67 %g

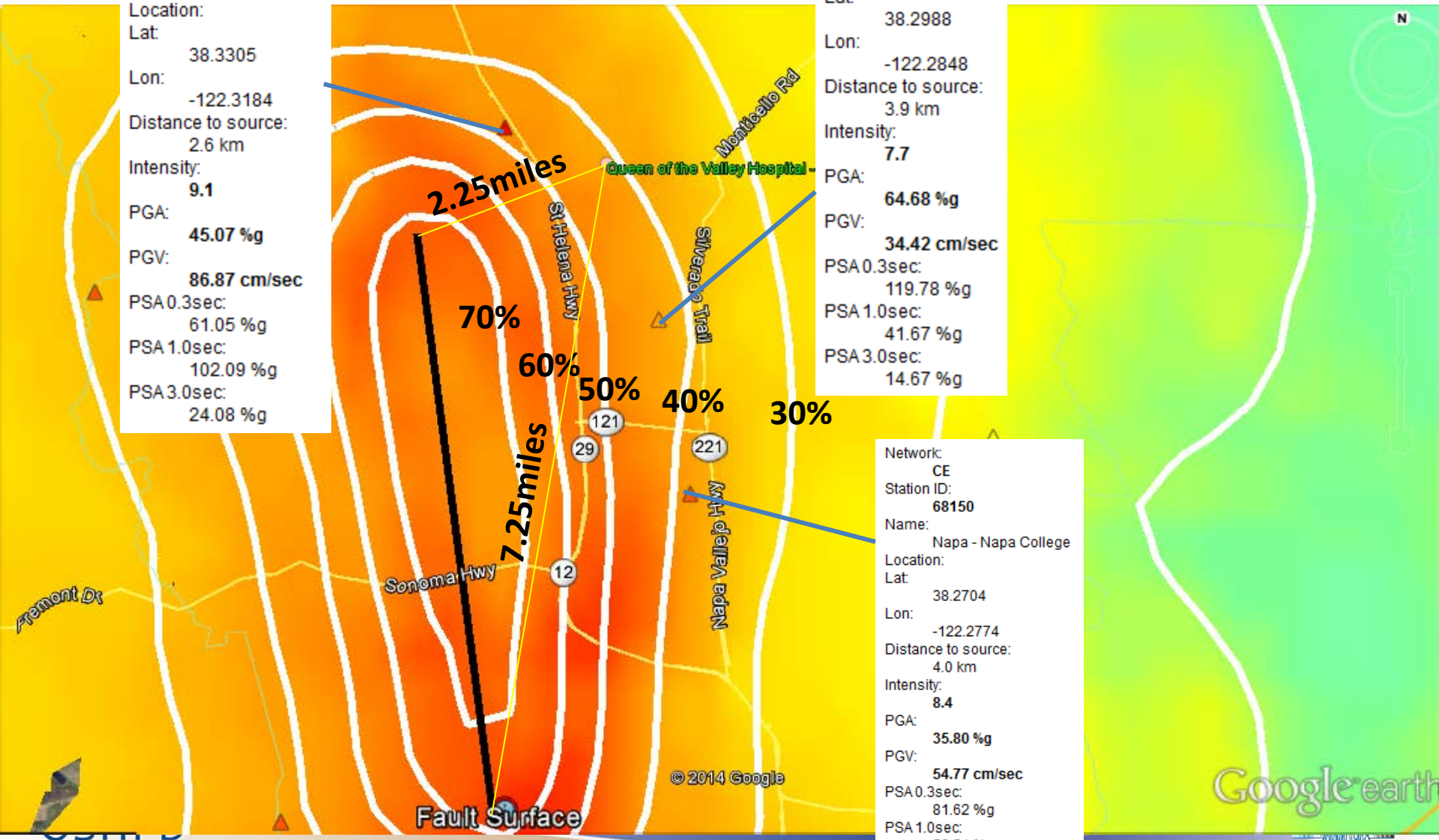

Network:
CE
Station ID:
68150
Name:
Napa - Napa College
Location:
Lat:
38.2704
Lon:
-122.2774
Distance to source:
4.0 km
Intensity:
8.4
PGA:
35.80 %g
PGV:
54.77 cm/sec
PSA 0.3sec:
81.62 %g
PSA 1.0sec:
52.51 %g
PSA 3.0sec:
10.12 %g

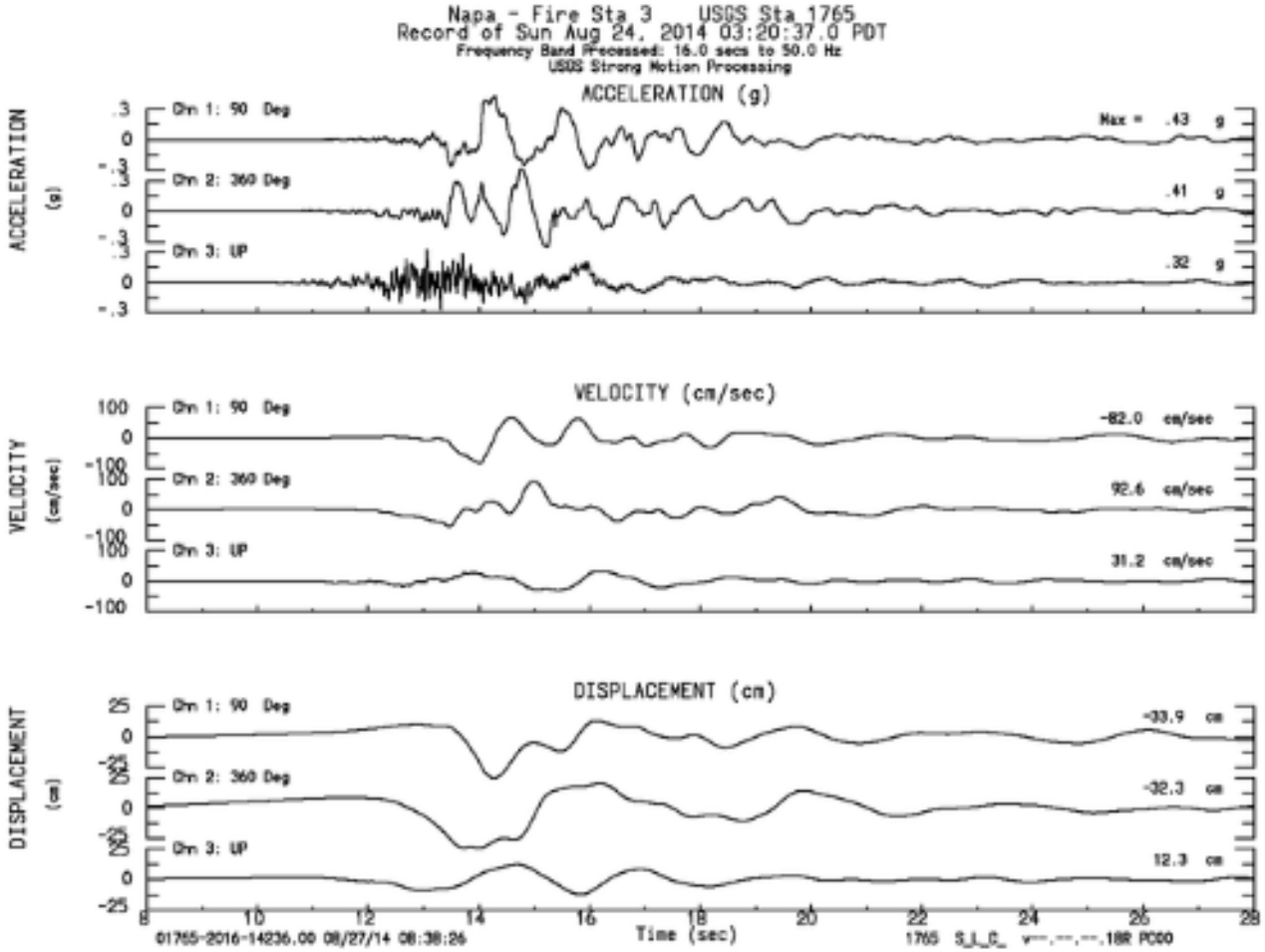
Napa - Fire Sta 3 USGS Sta 1765
Record of Sun Aug 24, 2014 03:20:37.0 PDT
Frequency Band Processed: 16.0 secs to 50.0 Hz
USGS Strong Motion Processing
ACCELERATION (g)
Chn 1: 90 Deg
Max = .43 g
Chn 2: 360 Deg
.41 g
Chn 3: UP
.32 g
VELOCITY (cm/sec)
-82.0 cm/sec
92.6 cm/sec
31.2 cm/sec
DISPLACEMENT (cm)
-33.9 cm
-32.3 cm
12.3 cm
Time (sec)
01765-2016-14236.00 08/27/14 08:38:26

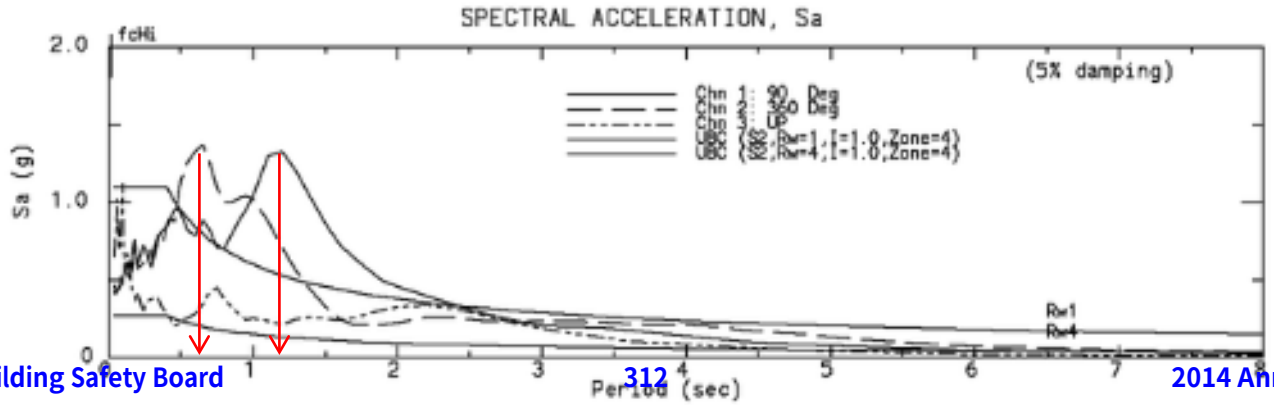
SPECTRAL ACCELERATION, Sa
(5% damping)
Chn 1: 90 Deg
Chn 2: 360 Deg
Chn 3: UP
Sa (g)
Period (sec)
Rw1
Rw4

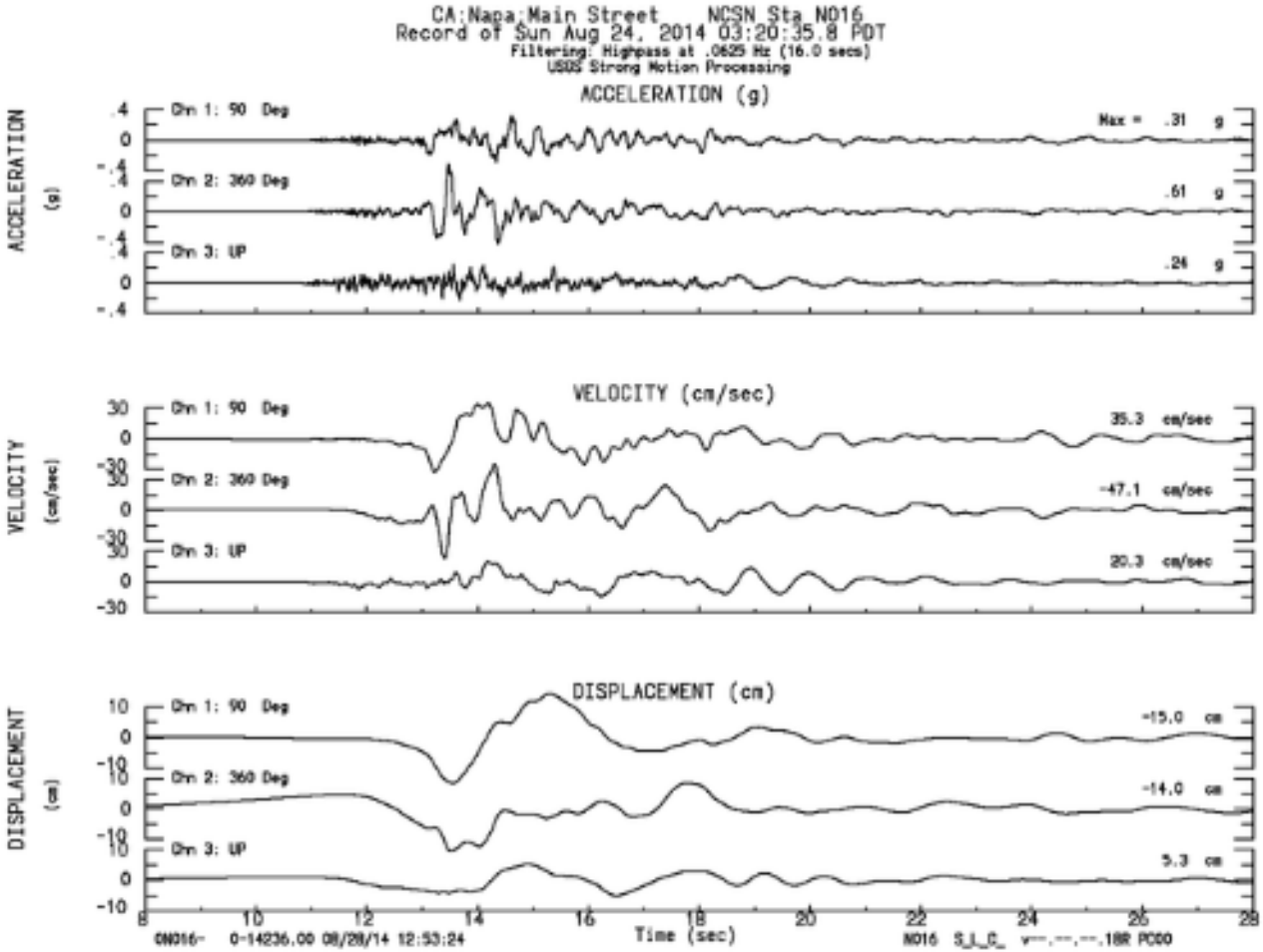
CA:Napa:Main Street NCSN Sta N016
Record of Sun Aug 24, 2014 03:20:35.8 PDT
Filtering: Highpass at .0625 Hz (16.0 secs)
USGS Strong Motion Processing
ACCELERATION (g)
Chn 1: 90 Deg
Max = .31 g
Chn 2: 360 Deg
.61 g
Chn 3: UP
.24 g
VELOCITY (cm/sec)
35.3 cm/sec
-47.1 cm/sec
20.3 cm/sec
DISPLACEMENT (cm)
-15.0 cm
-14.0 cm
5.3 cm
Time (sec)

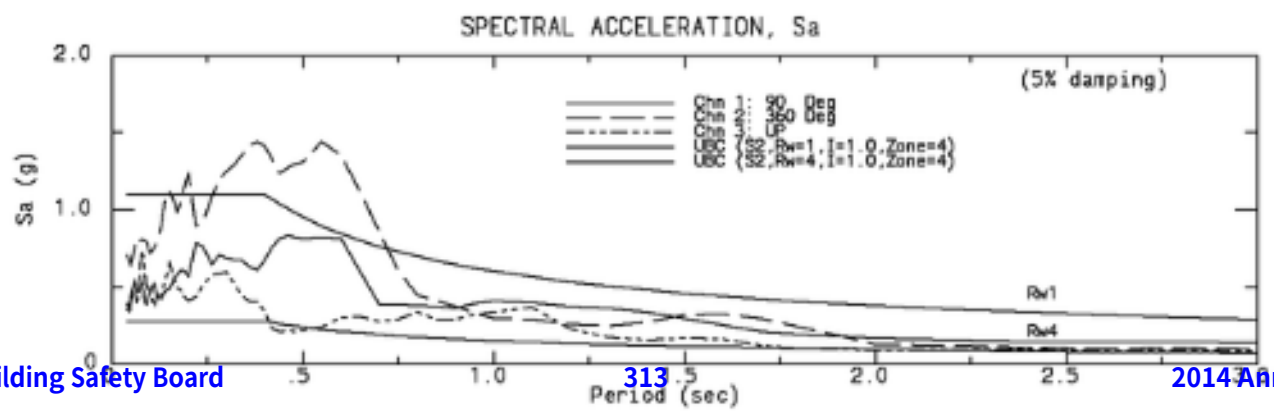
SPECTRAL ACCELERATION, Sa
(5% damping)
Chn 1: 90 Deg
Chn 2: 360 Deg
Chn 3: UP
UBC (S2,Rw=1,I=1.0,Zone=4)
UBC (S2,Rw=4,I=1.0,Zone=4)
Rw1
Rw4
Sa (g)
Period (sec)

Response Spectra

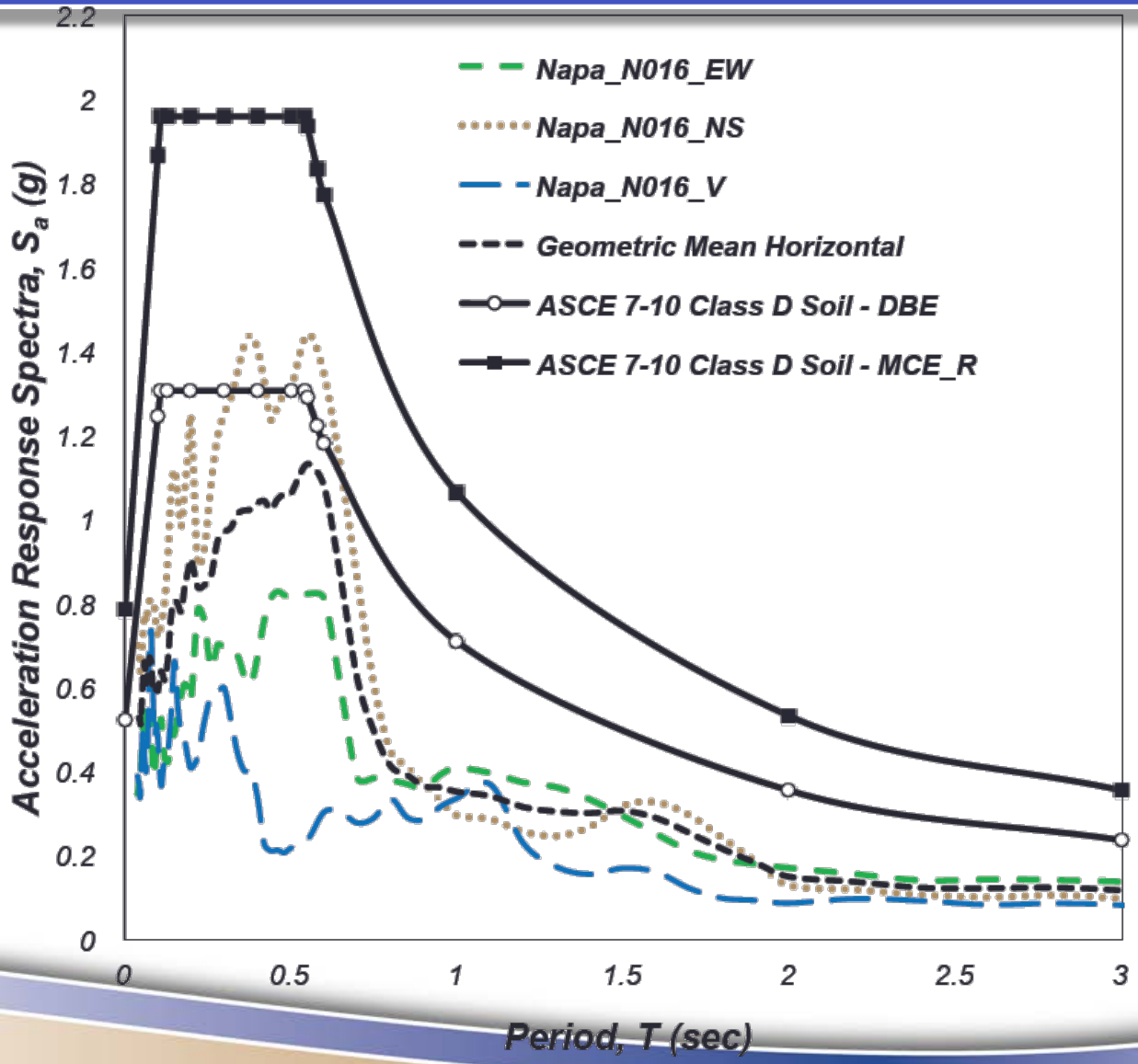

Queen of the Valley MC

BUILDING NAME	BLD #	BLDG #	SPC CLASS	NPC CLASS
MAIN HOSPITAL	01	01650	1	2
WEST WING	02	01651	1	2
WEST TOWER	03	01652	2	2
CONFERENCE ADDITION	04	01653	3	2
LINK CORRIDOR	05	01654	3	2
SOUTH ELEVATOR TOWER	06	01655	4	2
SOUTH NURSING WING	07	01656	3	2
NORTH ELEVATOR TOWER	08	01657	4	2
NORTH NURSING WING	09	01658	3	2
MATERNITY / PEDIATRICS	10	01659	3	2
ADMITTING / LOBBY	11	01660	3	2
RADIOLOGY / ONCOLOGY ADDITION	12	01661	4	2
MRI BUILDING	13	01662	5	2
EMERGENCY ADDITION	14	01663	5	2
EMERGENCY CANOPY	15	01664	5	4
CANOPY ADDITION	16	02881	5	4
WOMEN'S CENTER	-	05463	5	4
IMAGING CENTER CANOPY	-	05462	5	4
NORTH ACUTE CARE BUILDING	-	05309	5s	4 (PROPOSED)
NORTH ACUTE CARE CORRIDOR	-	05323	5s	4 (PROPOSED)

SEISMIC JOINT

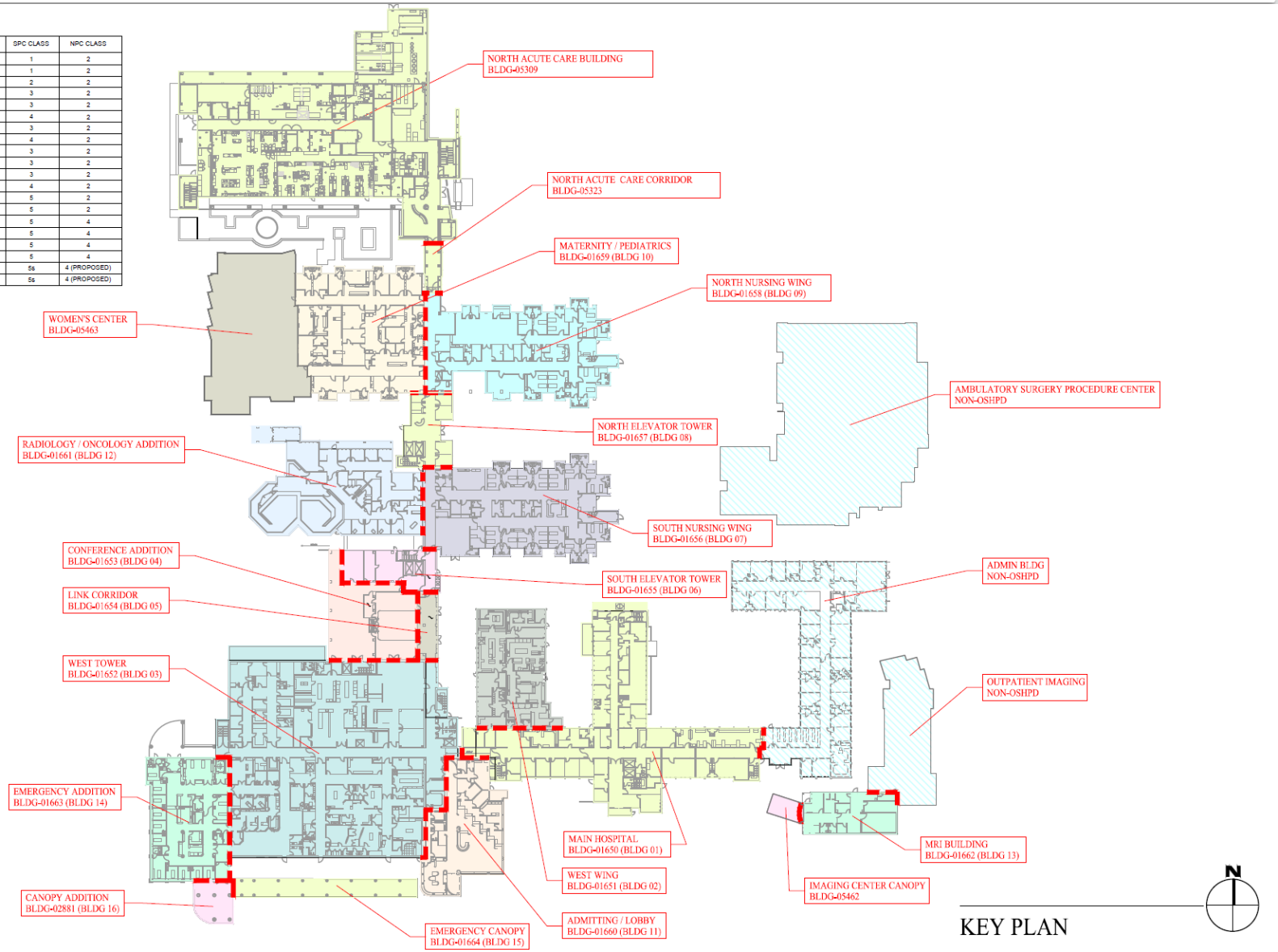

OSHPD Response

- GAC Post EQ assessment Postings
  - Queen of the Valley
    - 3 Yellow Tags

      - Main Hospital – Building 01 -1957 (SPC1/NPC2)
        - » 2 elevators out of service
        - » Ceiling damage
        - » Cracks in elevated floor slabs/beams

Queen of the Valley MC

g Corridor water leak

Main Hospital 3rd floor

Main hospital roof telephone rack severely out of plumb

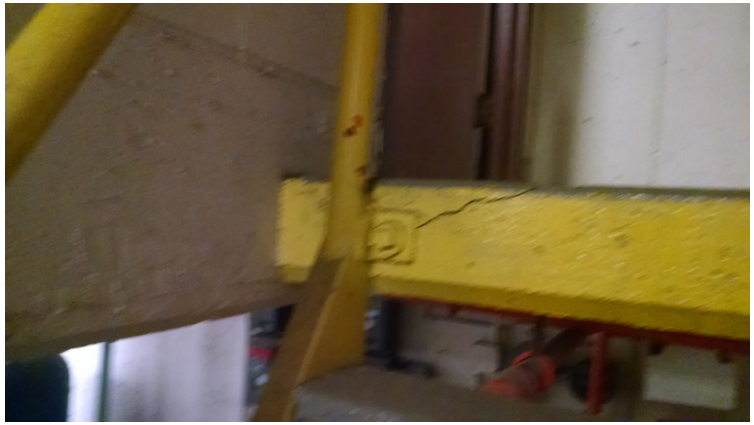

Boiler room crack in landing

Queen of the Valley MC

Main Bldg. Elevators Damaged

OSHPD Response

- GAC Post EQ assessment Postings
  - Queen of the Valley
    - 3 Yellow Tags
      - South Nursing Wing - Building 07 (SPC3/NPC2 3 Story bldg.)
        - » Substantial damage with displacement of storefront entrance and window system
        - » 1st floor Patient room #1114 multiple cracks in gypsum walls due to building drift.
        - » 2nd floor ICU rooms #3, 4, 5, 6, 7, Rooms 16, ICU Nurse Managers Office and Respiratory therapy
          - Exterior walls deflected out approximately ½”
          - Stucco exterior walls pulled down from upper deck at the top of wall approximately ½”

Que

South Nursing Wing Roof e
damage

Queen of the Valley MC

South Nursing Wing

Queen of the Valley MC

South Nursing Wing

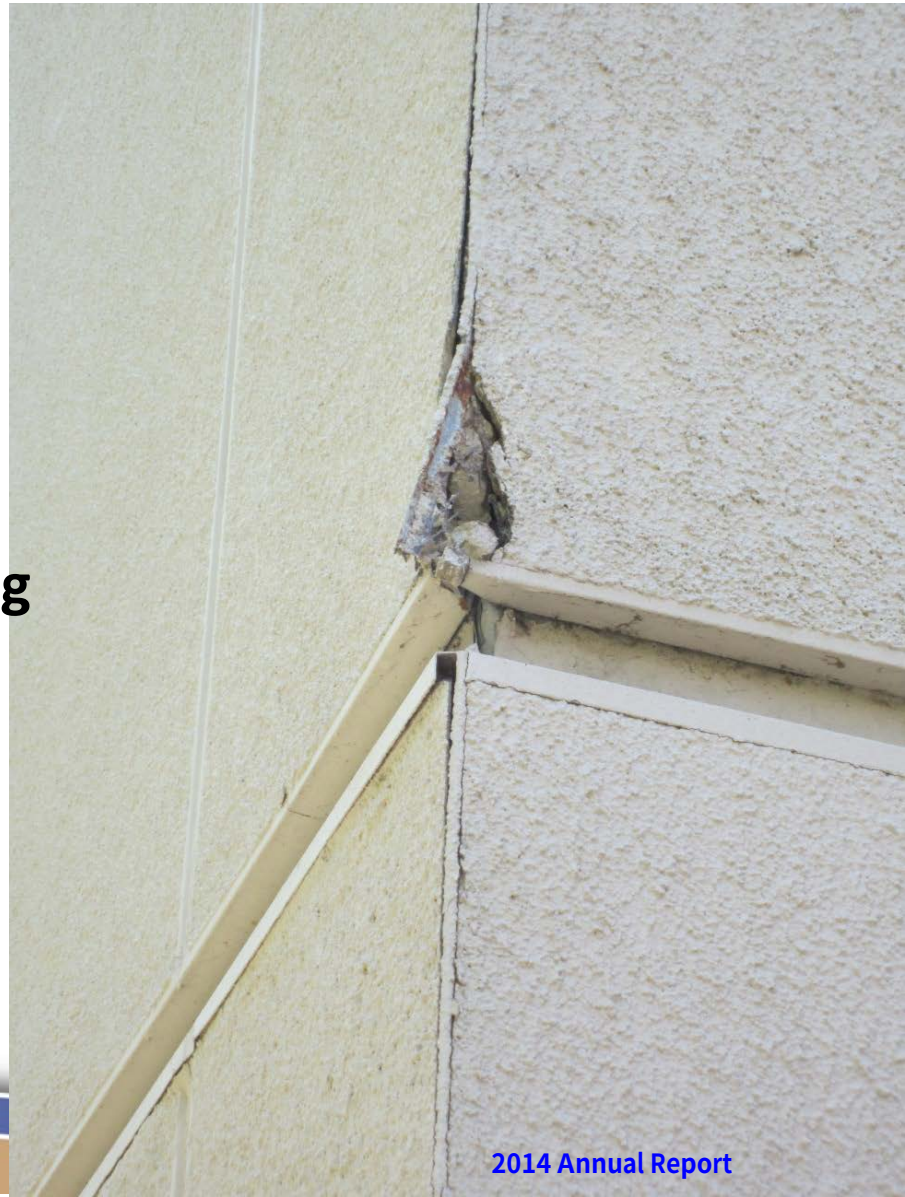

Queen of the Valley MC

South Nursing Wing North Elevator Tower Seismic Joint Damage

Damage with displacement of storefront entrance and window system

Queen of the Valley MC

1. Storefront out of Track

2. Storefront out of Track

OSHPD Response

- GAC Post EQ assessment Postings
  - Queen of the Valley
    - 3 Yellow Tags

      - North Acute Care Corridor – Building 18 (SPC5s/NPC NYA 3 Story bldg.)
        - » Ceiling grid damaged and dropped on floor. Grid appeared to lack lateral bracing.
    - Remainder 17 buildings Green Tagged

Queen of the Valley MC

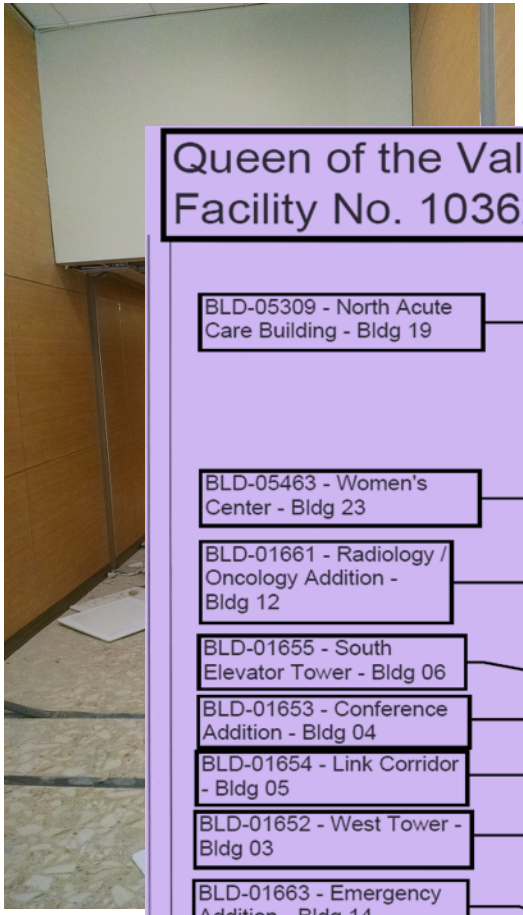

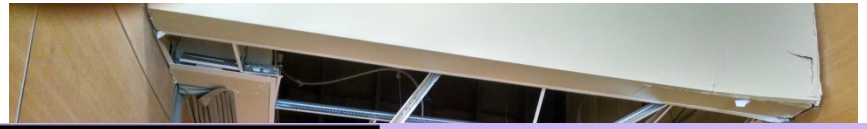

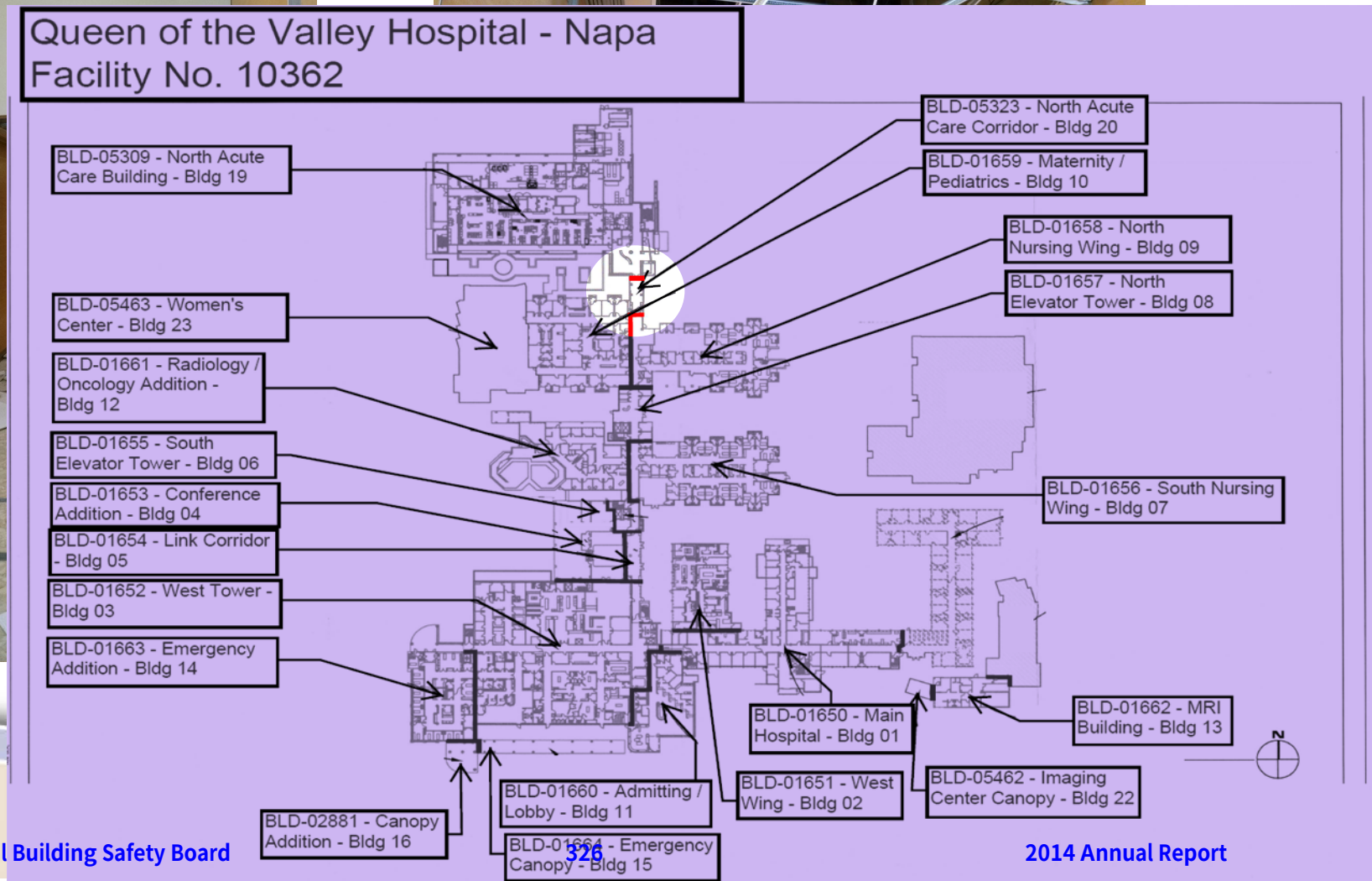

OSHPD
Office of Statewide Health Planning and Development

Queen of the Valley MC

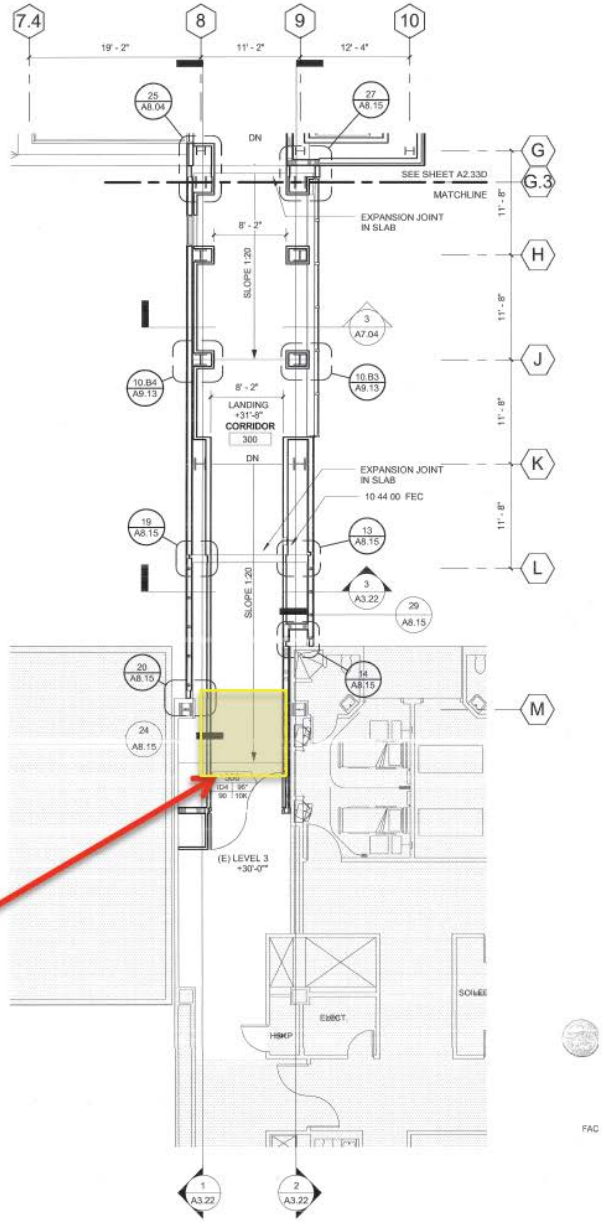

Area of Collapsed Ceiling Grid (Above)

3rd Floor Plan

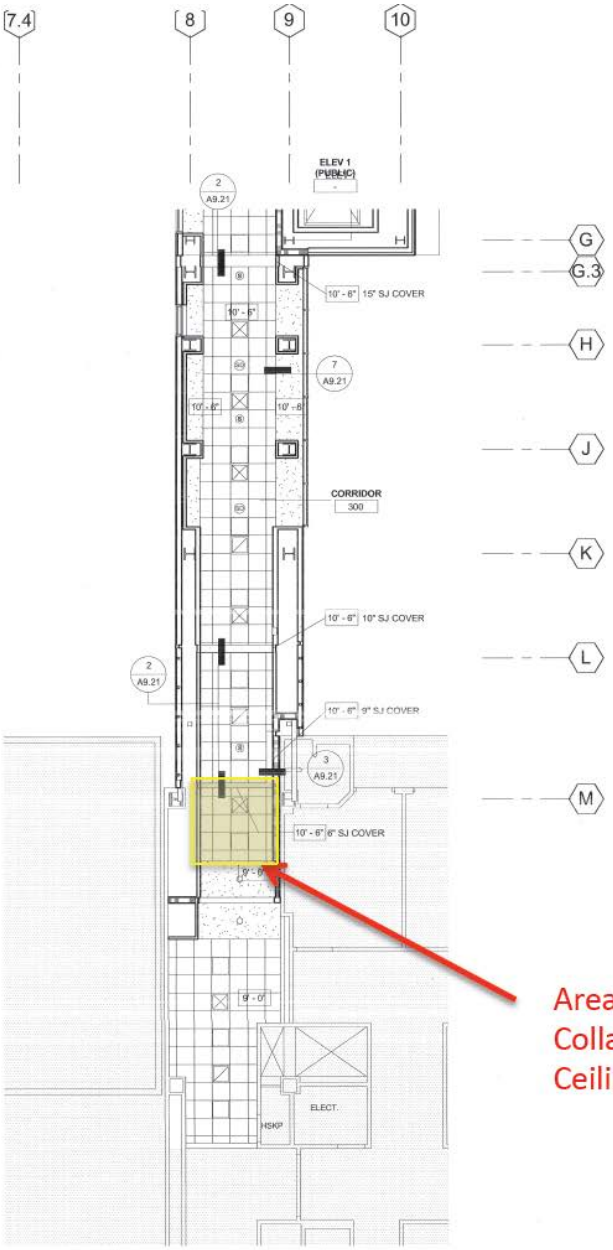

Area of Collapsed Ceiling Grid

20 LEVEL 3E
1/8" = 1'-0"

3rd Floor Reflected Ceiling Plan

Original As-Built Condition

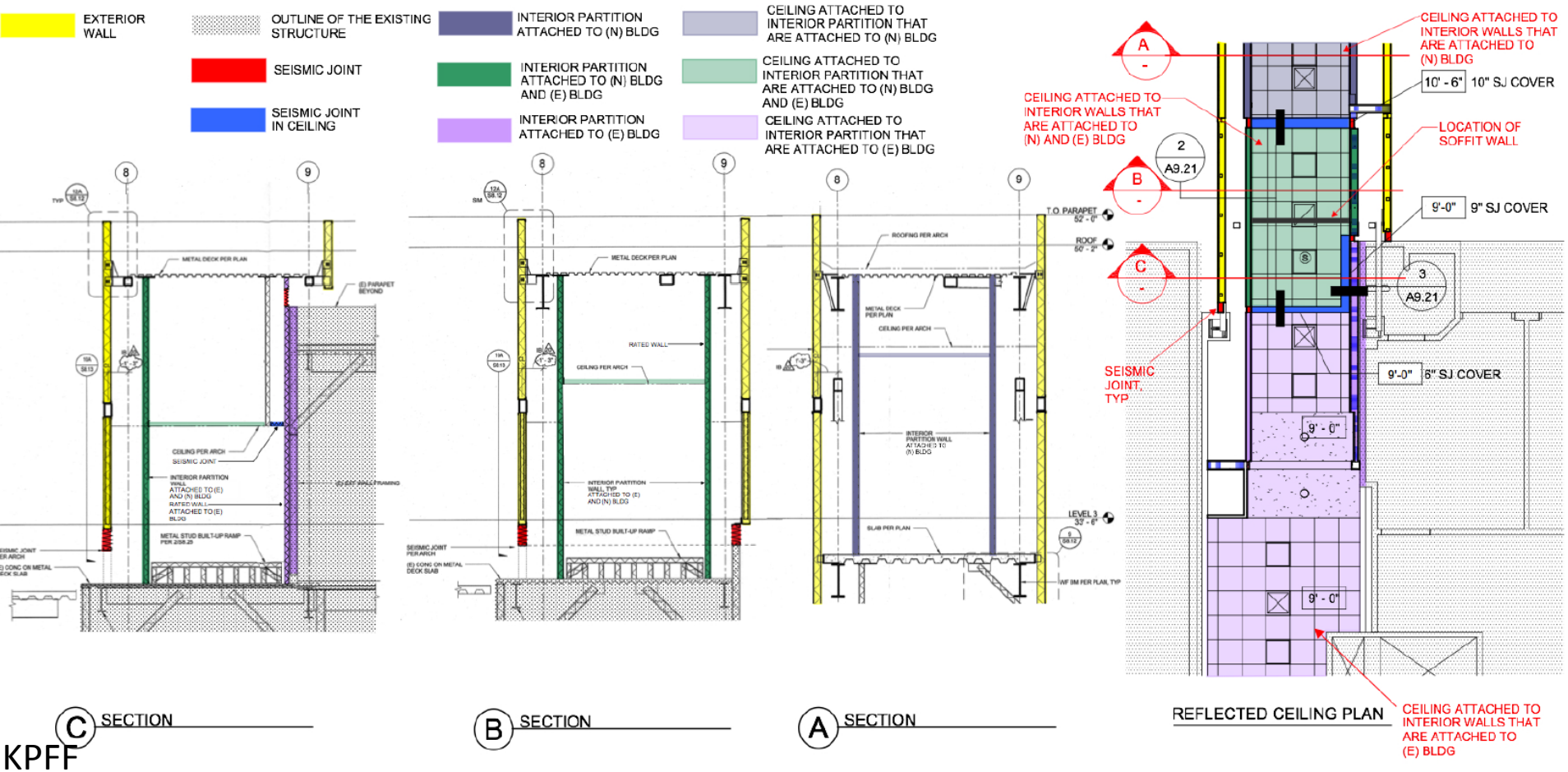

KPFF

Proposed Revised Design

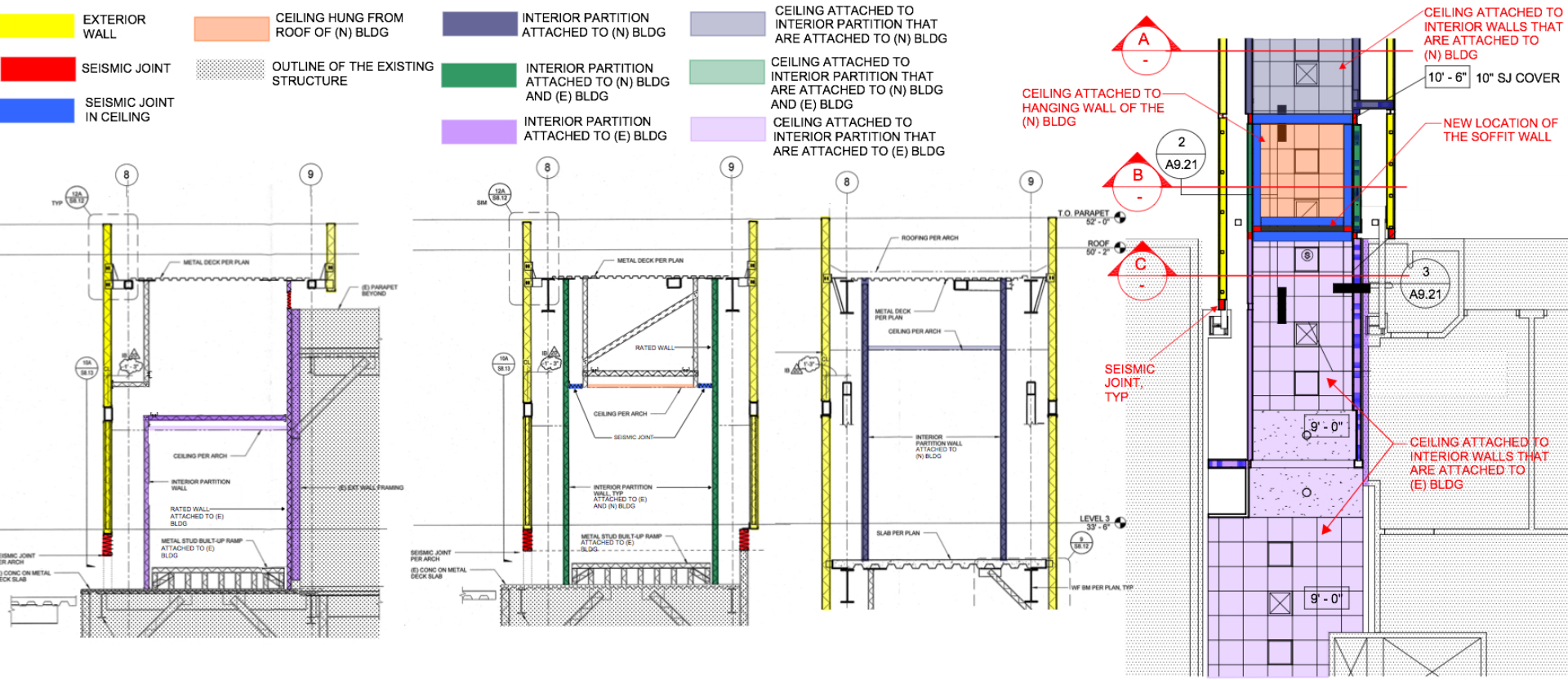

KPFF

Queen of the Valley MC

North Acute Care Building-BRBF Inspection Locations

OSHPD Response

- Remainder of 5 GACs Green tagged

  - 38 Green Tags (55 Total)
- 1 General Acute Psychiatric
  - St. Helena Hospital Center For Behavioral Health
    - 1 Green Tag

OSHPD Response -SNFs

- 16 SNFs
  - 16 Green Tags

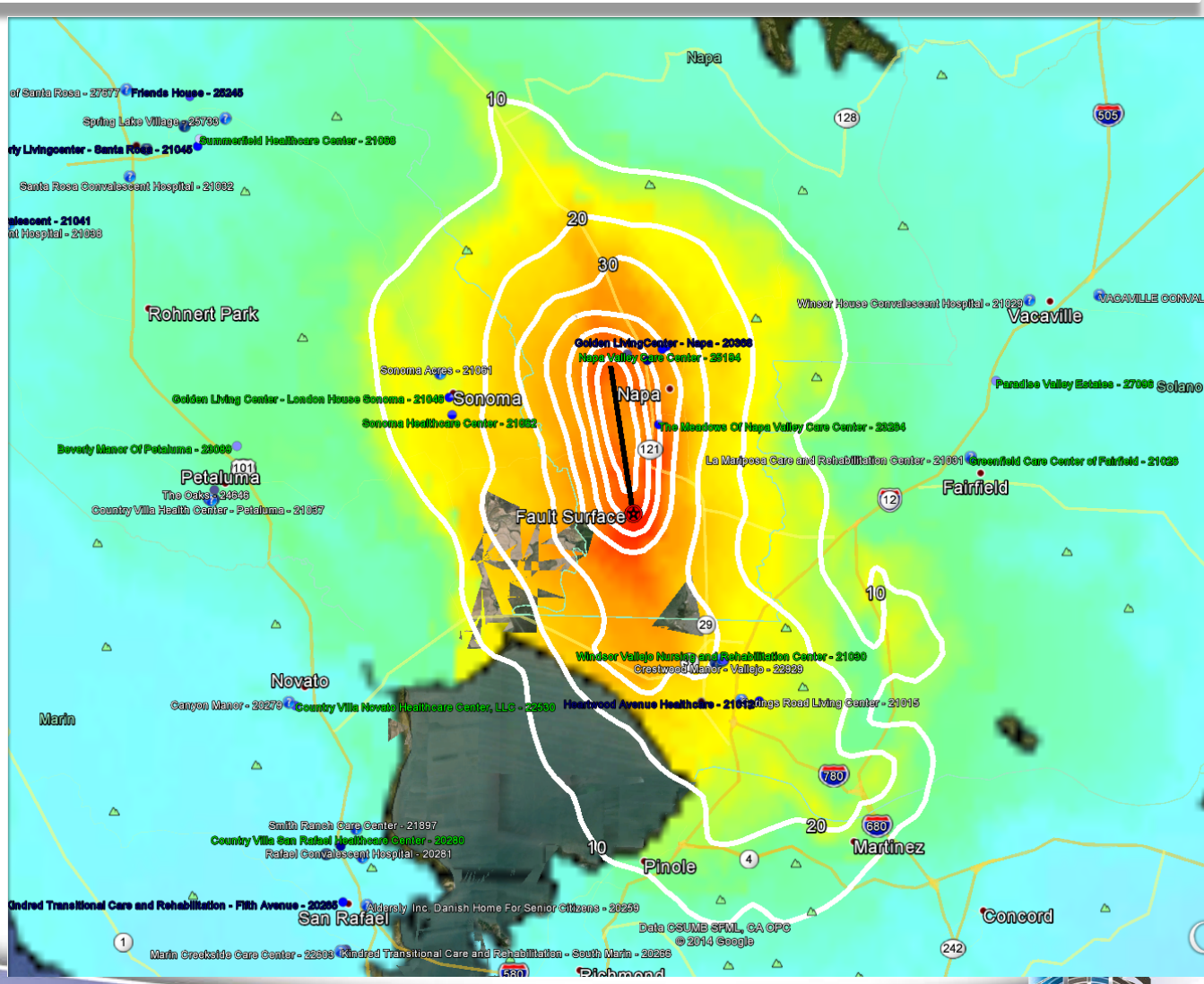

Blame by Association

Kaiser MOB Parking Parking Vallejo

Kaiser MOB Parking Structure Vallejo

Solar Canopy structure on roof of parking garage

OSHPD Response

- Mutual Aid Requests:
  - 3 Sites - Healthcare
    - Veterans Home of California, Yountville – 6 Green Tags
    - Napa State Hospital
      - 1 Red Tag
      - 8 Yellow Tags
      - 49 Green Tags
    - Sonoma Developmental Center
      - 21 Green Tags

Napa State Hospital

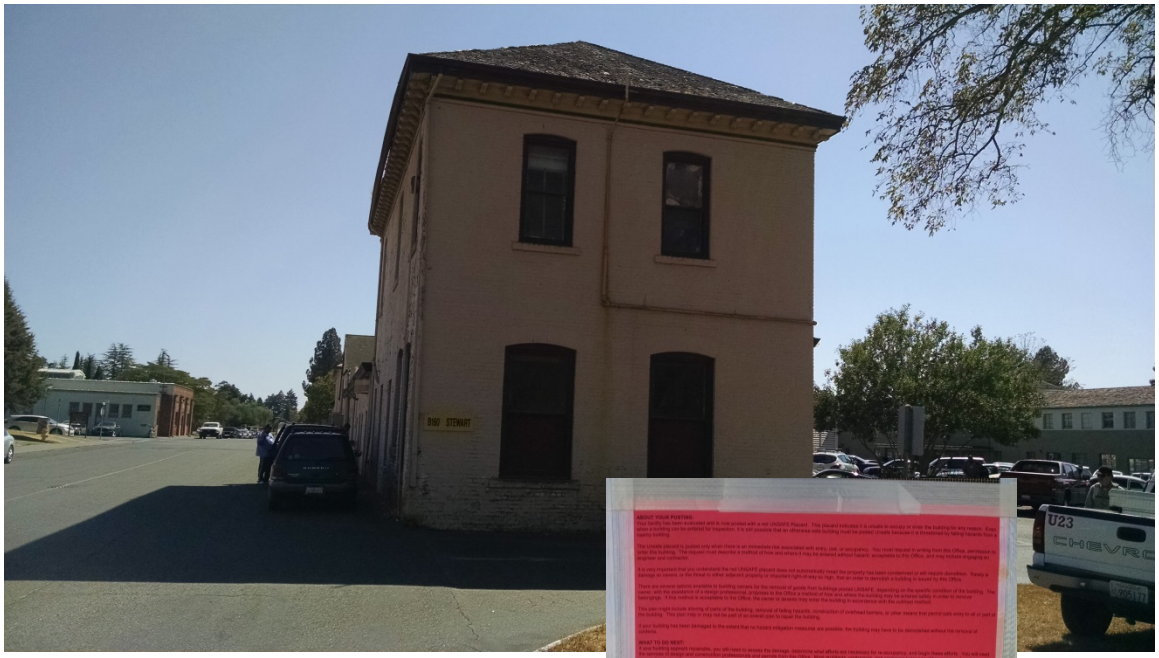

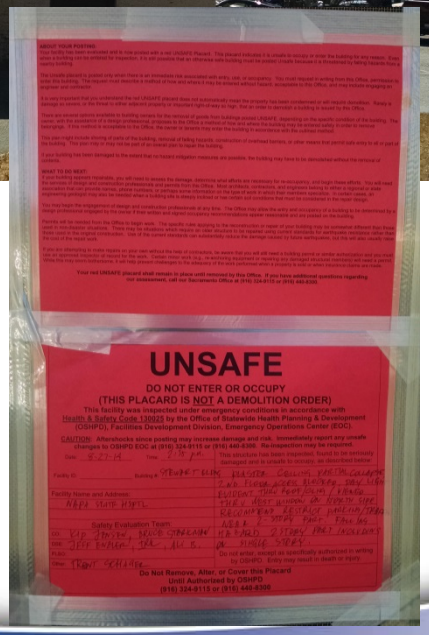

OSHPD Response

- Mutual Aid Requests:
  - Local Gov. Jurisdictions
    - City of Napa
    - City of Vallejo

30 Staff @ Peak Assessment

Earthquake Comparison

South Napa Earthquake

Date: August 24, 2014, at 3:20:44. (PDT)
Magnitude: 6.0

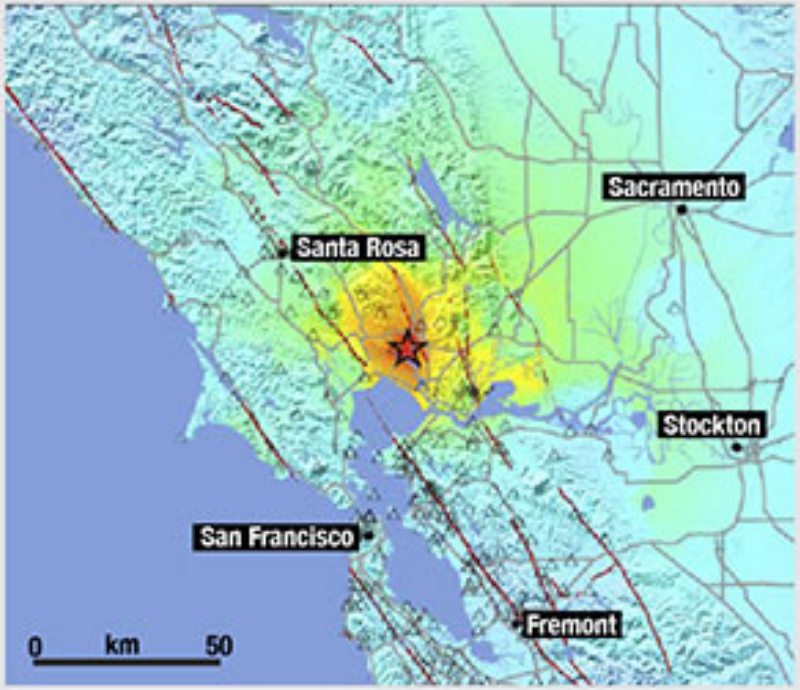

Loma Prieta Earthquake

Date: October 17, 1989, at 5:04:15 p.m. (PDT)
Magnitude: 6.9

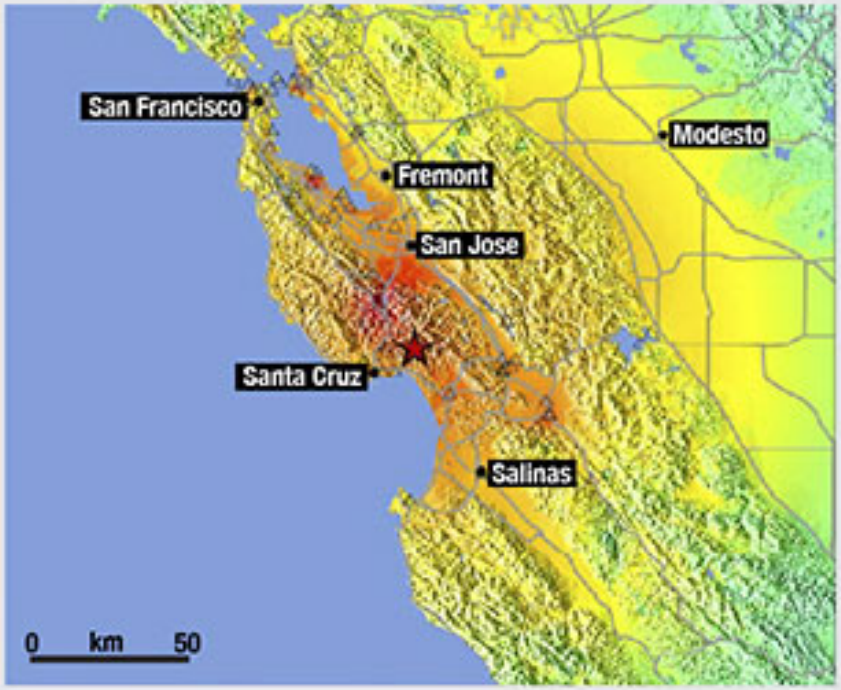

Intensity of ground shaking

I	2-3	4	5	6	7	8	9	10
Not felt		**Light** Felt indoors by many people, windows, doors and dishes rattle		**Strong** Houses suffer non-structural damage		**Severe** Hard to stand, walls crack, old structures may collapse		**Extreme** Ordinary well built buildings collapse

Source: USGS

In Closing . . .

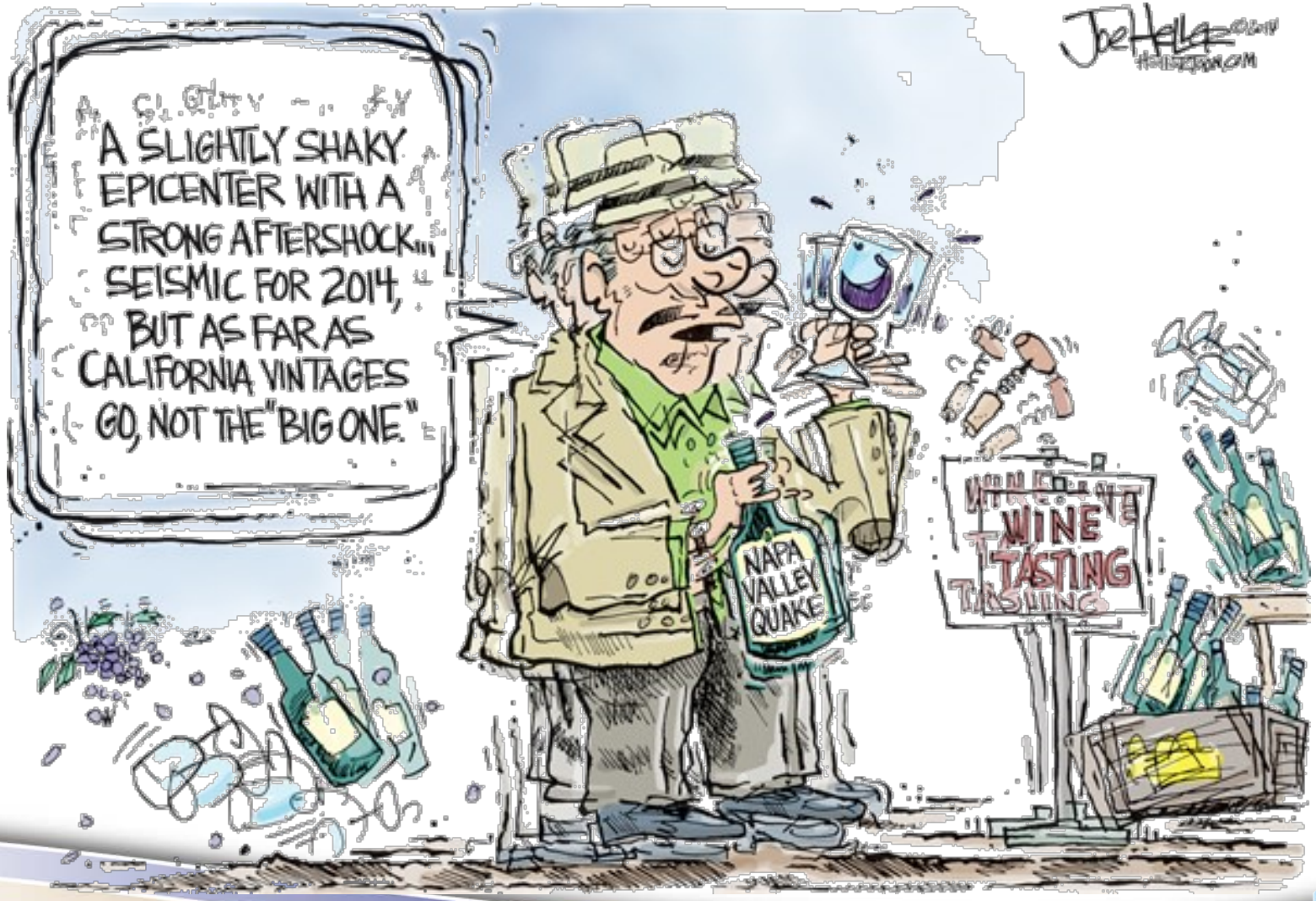
A SLIGHTLY SHAKY EPICENTER WITH A STRONG AFTERSHOCK... SEISMIC FOR 2014, BUT AS FAR AS CALIFORNIA VINTAGES GO, NOT THE "BIG ONE."
NAPA VALLEY QUAKE
WINE TASTING

OSHPD
Office of Statewide Health Planning and Development

Information for Acute Care Hospitals and Skilled Nursing Facilities via Maps

Hussain Bhatia, Ph.D., S.E., Supervisor, Seismic Compliance Unit, OSHPD/FDD

Mapping Resources Available

- All general acute care hospital facilities are mapped and available at http://oshpd.ca.gov/fdd/seismic_compliance/FacGoogle/index.html
  - Number and costs of active projects at a facility
  - List of buildings with SPC and NPC ratings
  - Links to site maps
  - Links to facility and building pages in the eCA portal
  - Access all related projects for facility or any specific building
  - Linked in instrumented Buildings

Mapping Resources Available

- All skilled nursing and intermediate care facilitates are mapped and available at http://oshpd.ca.gov/FDD/SNF-ICF/SNF-ICFgoogle.html
  - Number and costs of active projects at SNF/ICF
  - Links to facility page in the eCA portal

Emergency Operations Uses

- Shakemaps for recent earthquakes available at http://earthquake.usgs.gov/earthquakes/shakemap/
- Fault traces available from http://earthquake.usgs.gov/hazards/qfaults/google.php

Update Frequency/Future Revisions

- Updated approximately every other week – studying ways to make the data live
- Adding new features and information that may be useful
- Any suggestions are welcome

Open Data

- SPC/NPC/Extension data is available in an open data platform called SOCRATA at: https://chhs.data.ca.gov/
- Allows custom visualizations and maps to be constructed from the data. These visualizations and maps can then be embedded in your website.

Open Data Portal

CHHS Open Data

Sign Up Sign In Accessibility

Home Catalog Tutorials Developers About

Search CHHS Data

Welcome to the California Health and Human Services Open Data Portal

Innovation. Information. Research. Opportunity. Engagement. Transparency.

This is a public beta of the CHHS Open Data Portal.
Please send any feedback to opendata@chhs.ca.gov.
The CDPH Open Data portal has moved to cdph.data.ca.gov. These data are also available on this site.

All Data

Diseases and Conditions

Facilities and Services

Data, Maps, Graphs

NPC -1 Facilities in the Bay Area

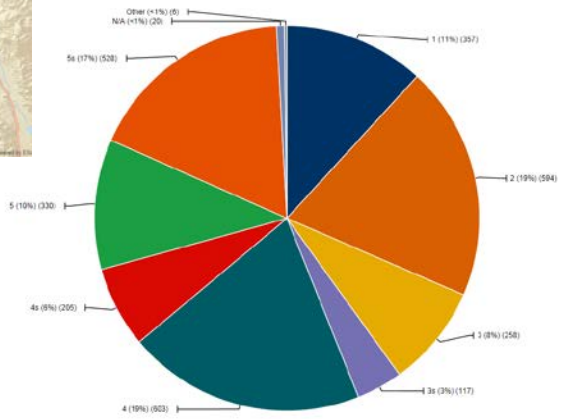

1 2 3 3s 4 4s 5 5s N/A

SPC ratings range from 1 to 5 with SPC 1 assigned to buildings posing significant risk of collapse following a strong earthquake and SPC 5 assigned to buildings reasonably capable of providing services to the public following a strong earthquake. Where SPC ratings have not been verified by the Office of Statewide Health, Planning and Development (OSHPD), the rating index is followed by the letter 's'.

Update for the Hospital Building Safety Board

Facilities Development Division

California's Building Department for Hospitals

Paul A. Coleman, Architect, Deputy Director

November 20, 2014

Workload in Construction Values 2012 - 2014

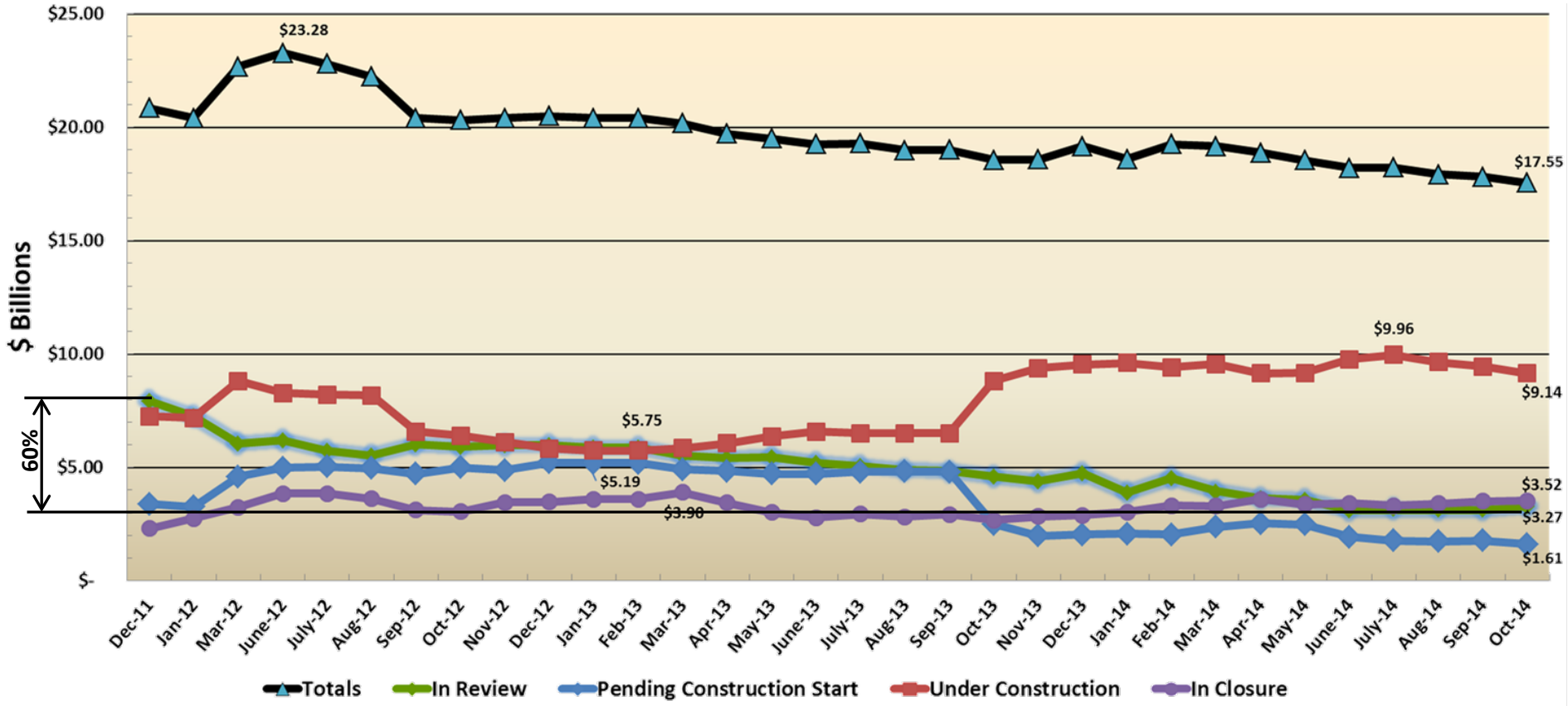

Workload in Construction Values for projects in Construction

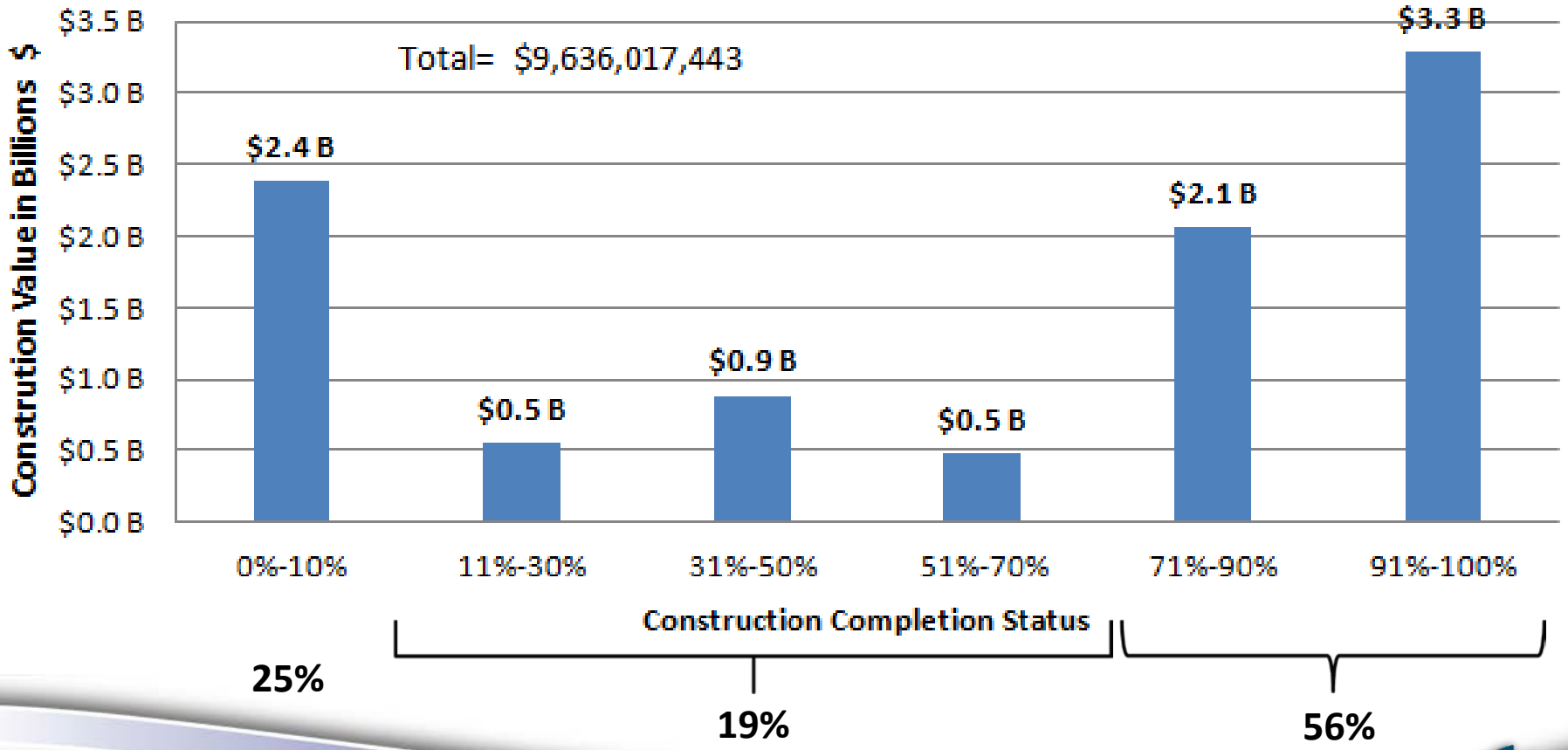

Seismic Compliance Workload Forecast

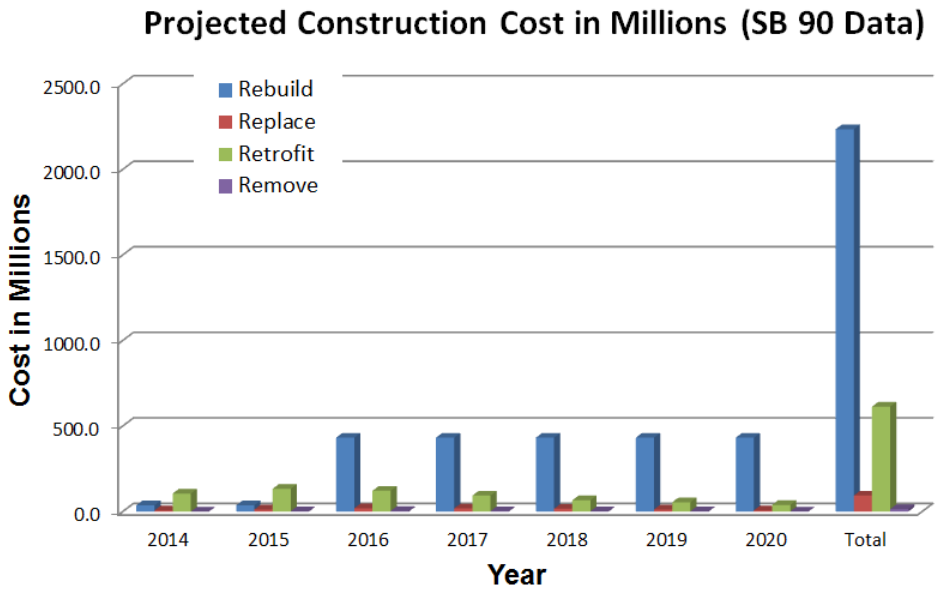

Summary Forecasting, SB 90 Data in Millions of Dollars

	2014	2015	2016	2017	2018	2019	2020	Total
Rebuild	36.8	36.8	432.3	432.3	432.3	432.3	432.3	2235
Replace	7.0	12.0	19.6	18.6	16.6	12.6	7.6	94
Retrofit	105.6	133.1	121.7	93.7	66.2	54.6	38.9	614
Remove	0.0	2.2	3.9	2.9	2.2	1.7	1.2	14
	149	184	577	547	517	501	480	2957

$2.957B x 1.64% = $4,849,480.00/5 years = $969,896.00/year
= 2% of Annual Budget

Workload Forecast

Why is Workload Down?

- ACA
  - Structural changes in healthcare system
  - More/higher out-of-pocket deductibles – concerned consumers
  - Penalties for readmission
  - Drives healthcare out of hospitals and into clinics/out-patient settings

Exhibit 1: Year-over-Year Percent Change in Hospital Prices (2009-2014)

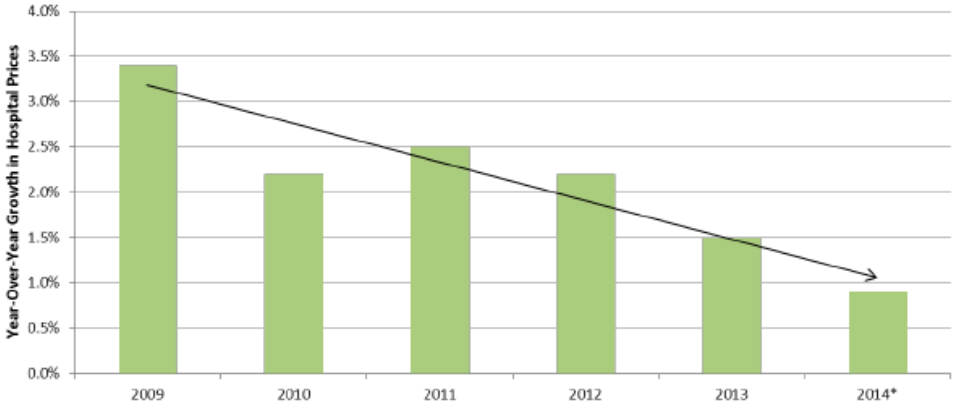

Source: Dobson | DaVanzo analysis of Bureau of Labor Statistics data. Note: Annual growth rates calculated from December to December of each year. *2014 growth rate calculated from December 2013 to June 2014.

Workload Forecast

- Technology
  - Allows more invasive and high-risk procedures to move to out-patient setting
  - Will ACA inhibit the technology growth?

- Reimbursements/Payment
  - Adaptation must occur as the cost-curve continues to bend
  - Change or be changed

- Revenue projections for next five years remains stagnant

Overtime Comparison Chart

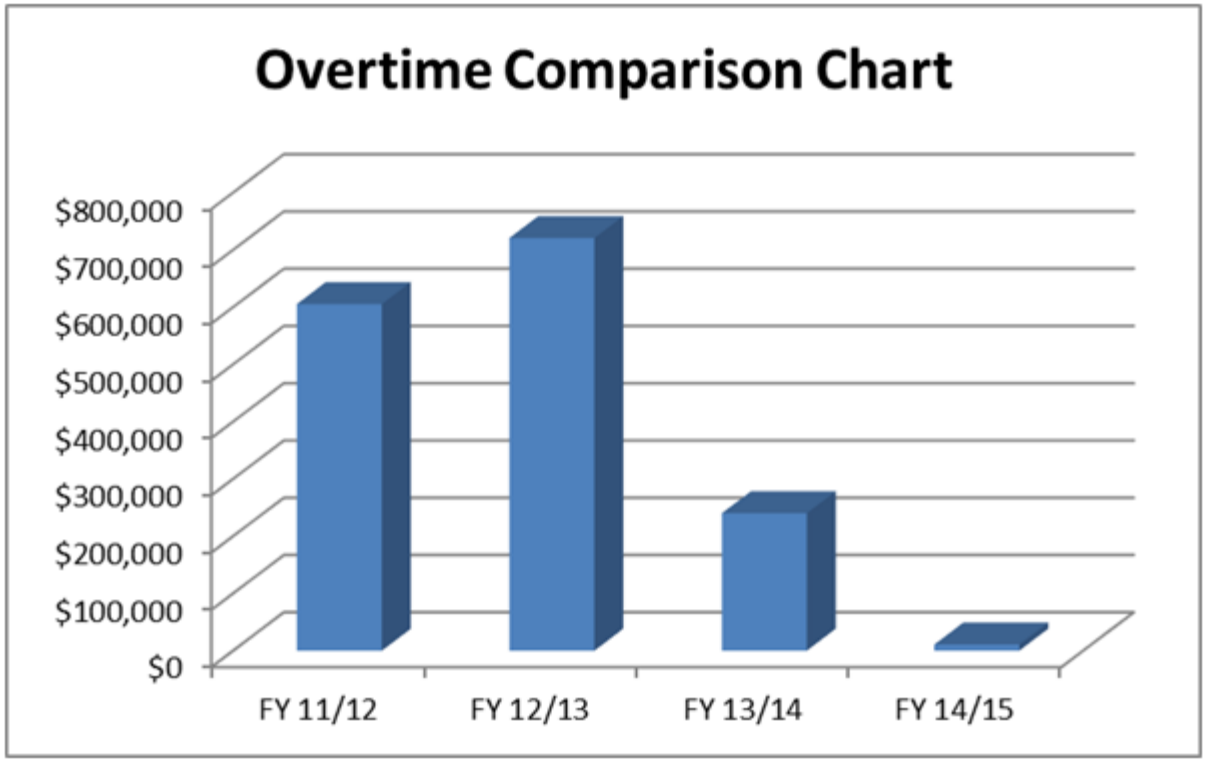

Figure IX-2

A&E Contract Expenditure

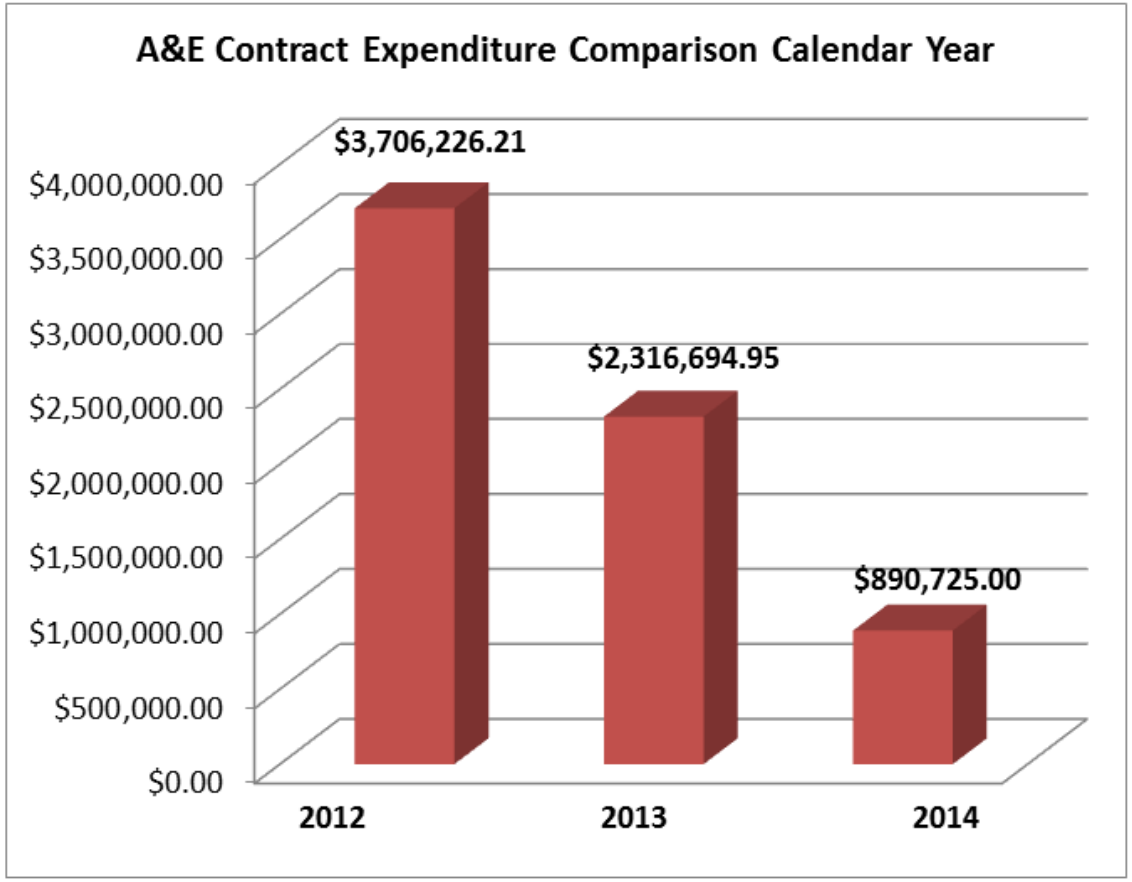

Figure IX-4

No. of Reviews 3rd Qtr. 2014

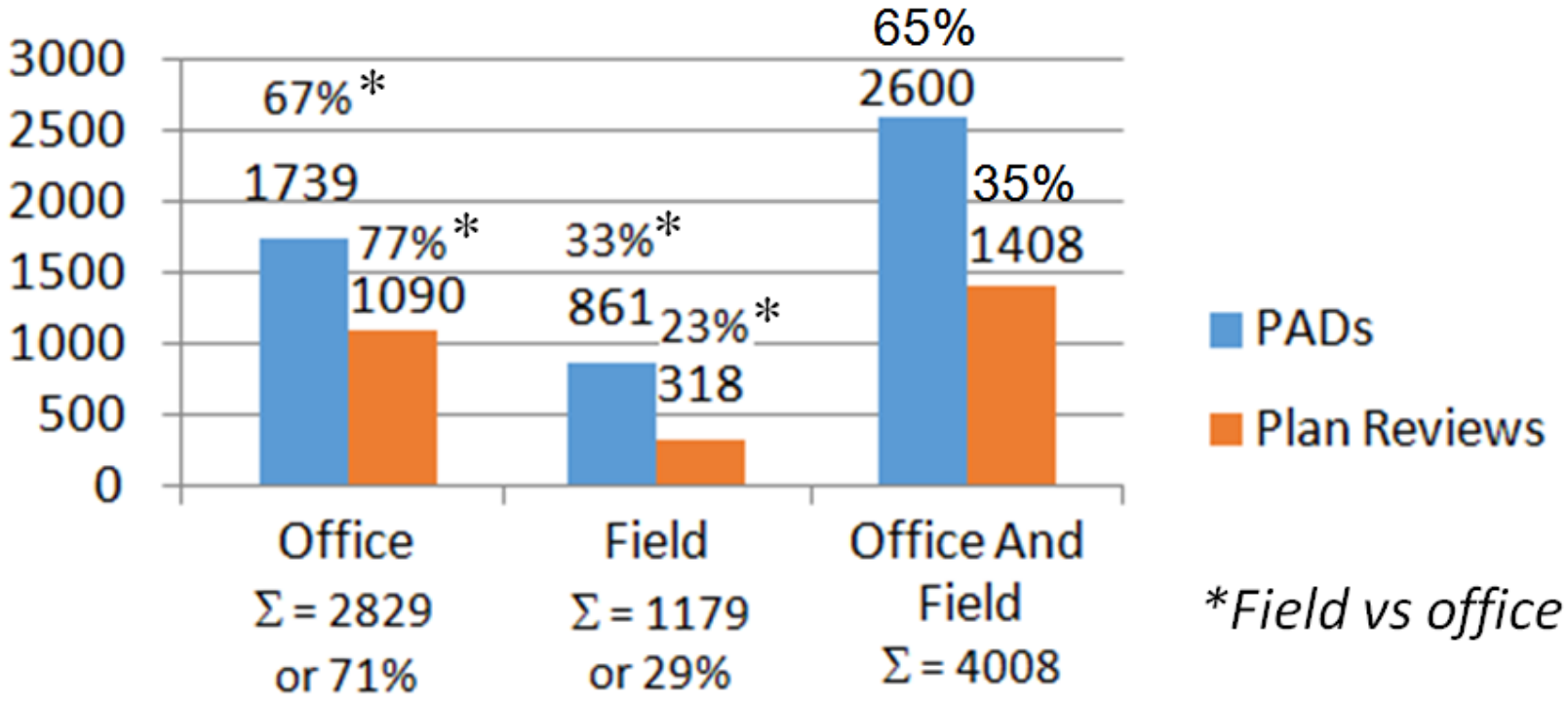

No. of Reviews 2013

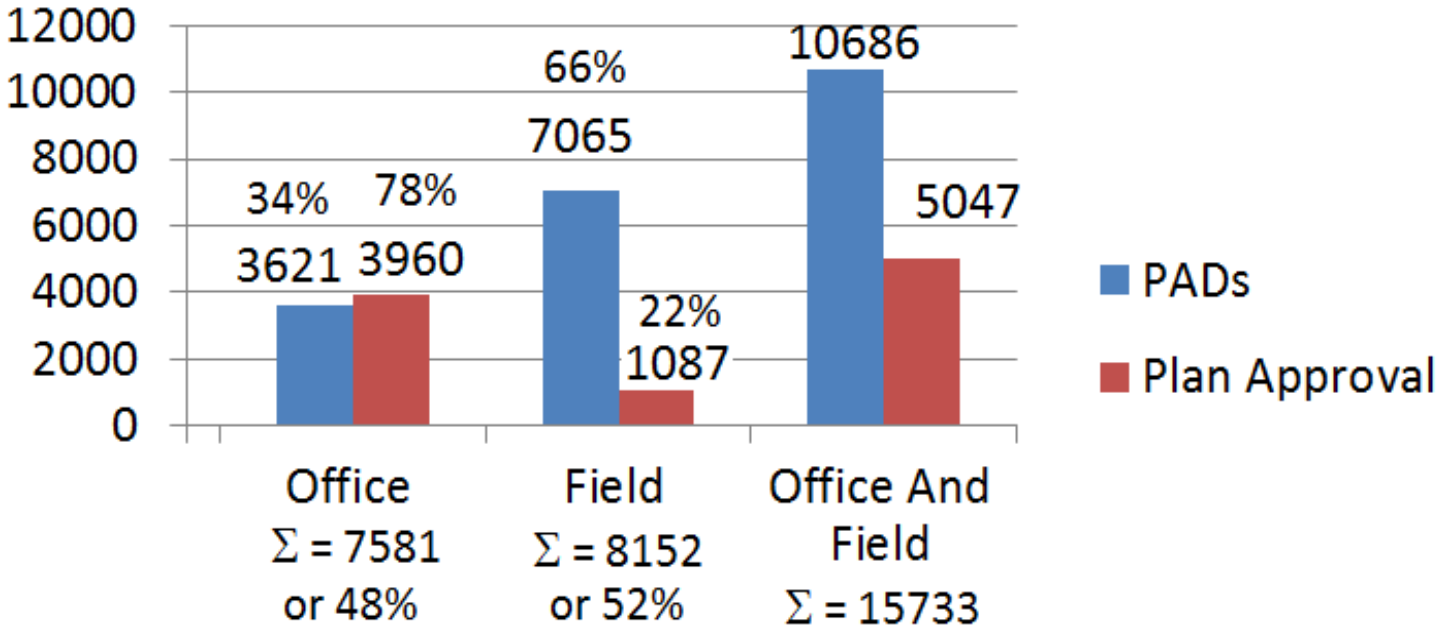

Performance 3rd Qtr. 2014

Based on number of projects meeting the established goals

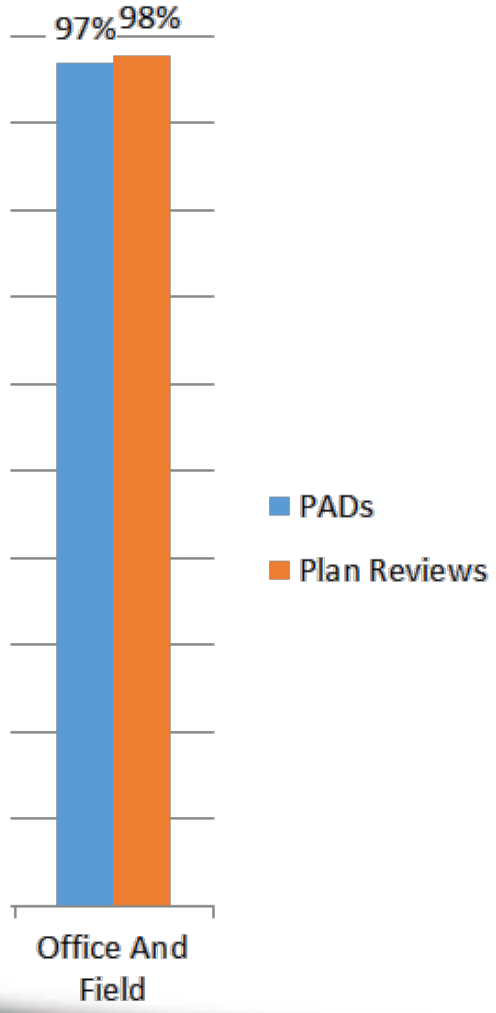

Performance 4th Qtr. 11 – October 14

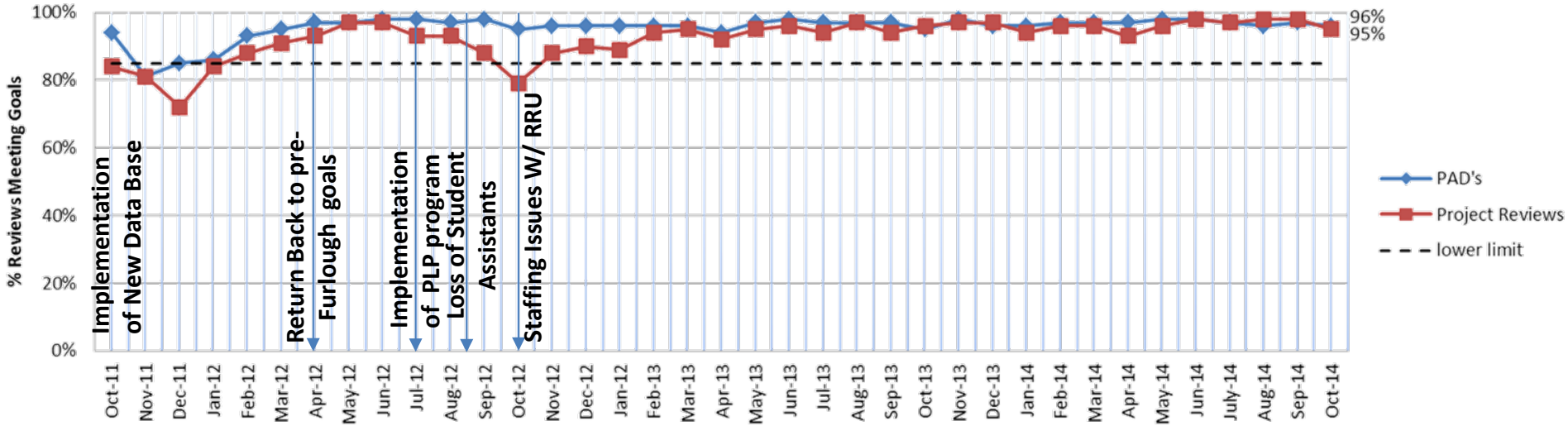

Based on number of projects meeting the established goals

Project Plan Review Data Analysis – 3rd Quarter 2014

69% of the Plan Reviews are completed w/in 21 days or less

88% of the PAD Reviews are completed w/in 21 days or less

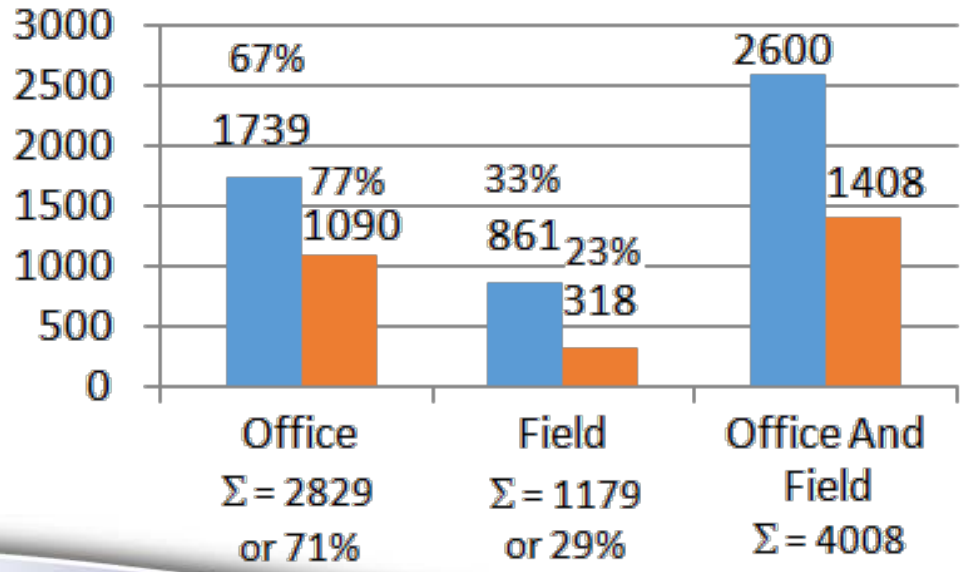

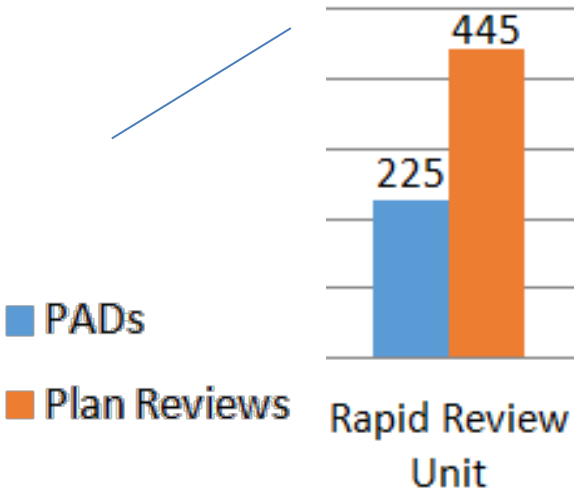

Or 40.8% of Office Plan Approval Reviews

Σ=670 or 16.7% of All Projects

PAD Performance 3rd Qtr 2014

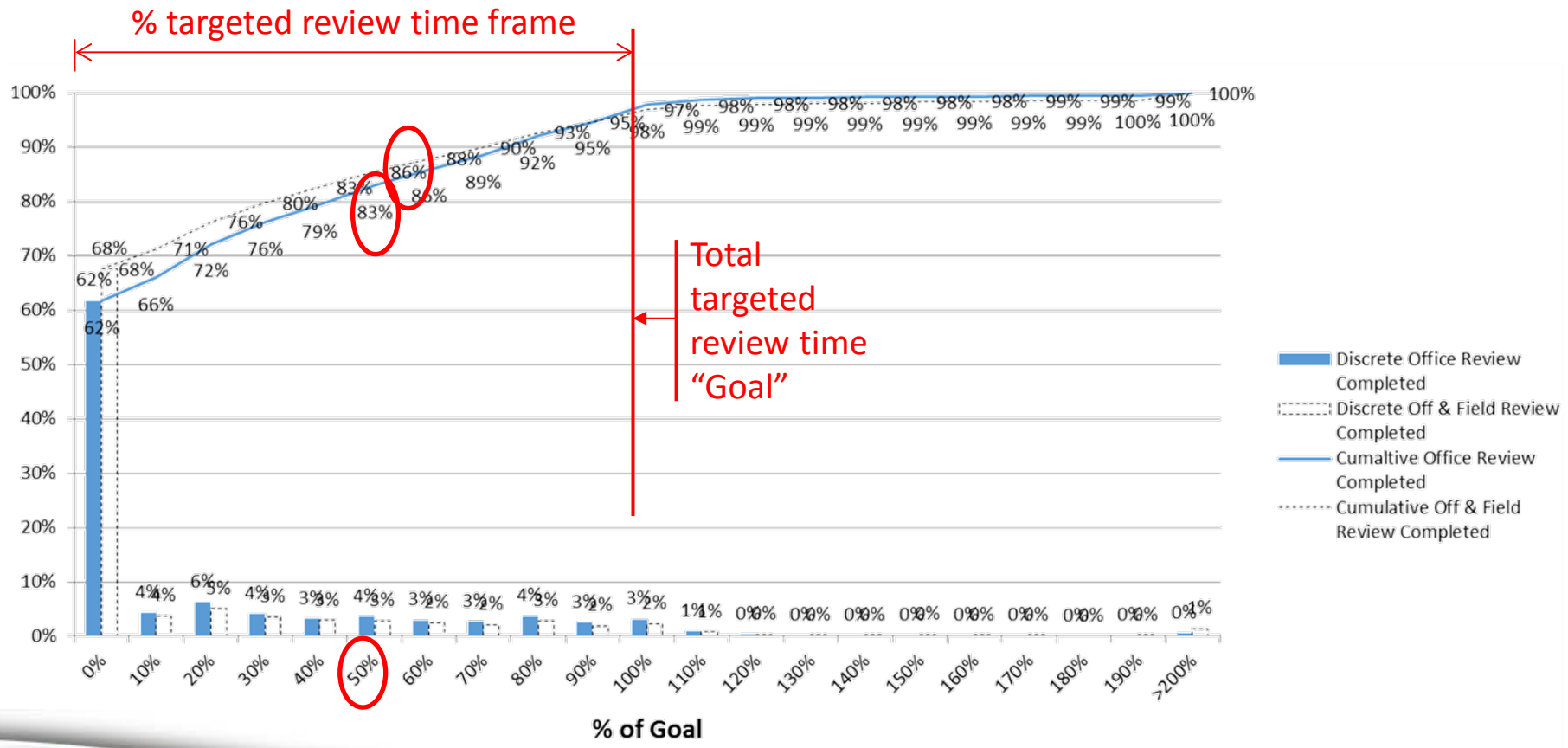

Plan Review Performance 3rd Qtr 2014

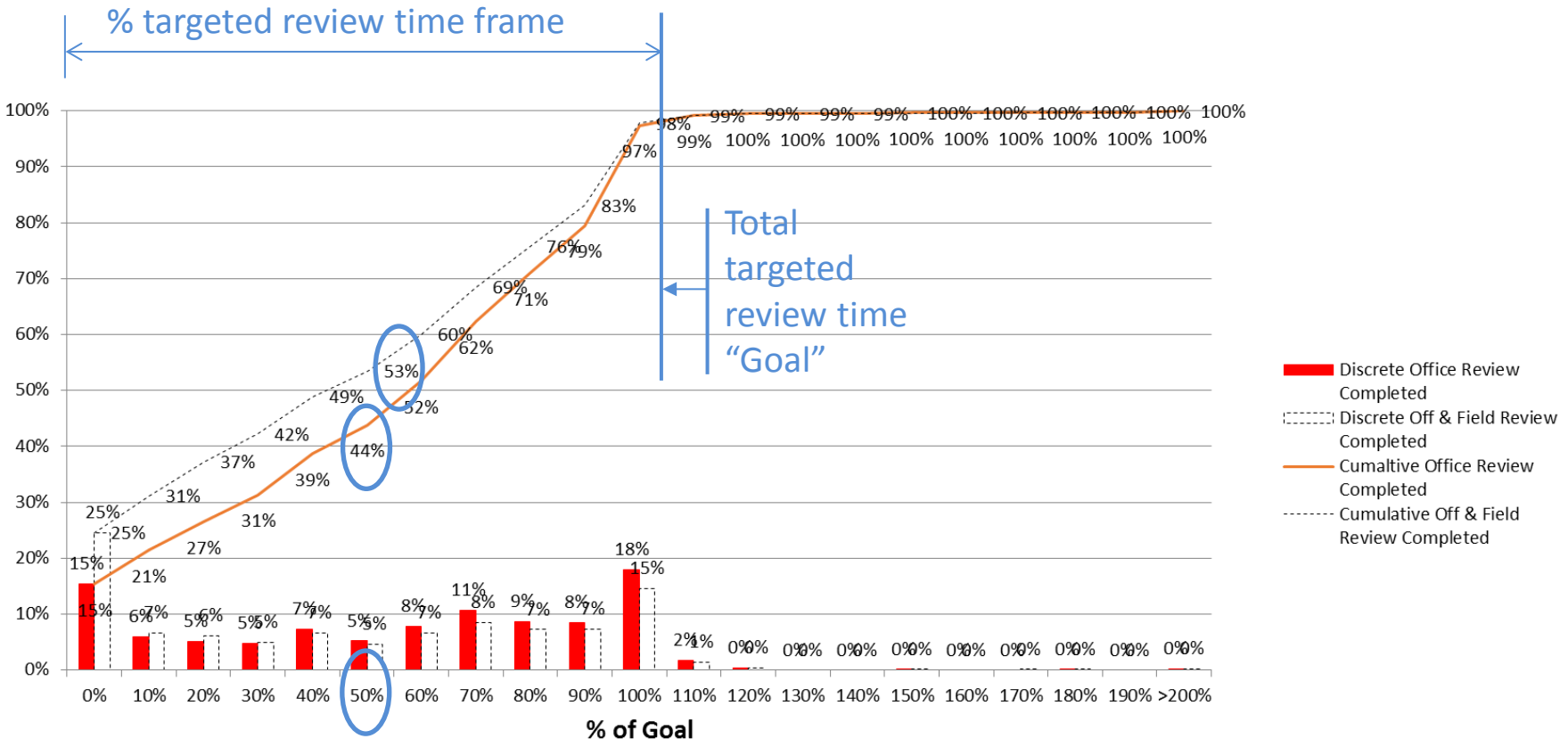

Workload Summary/Performance

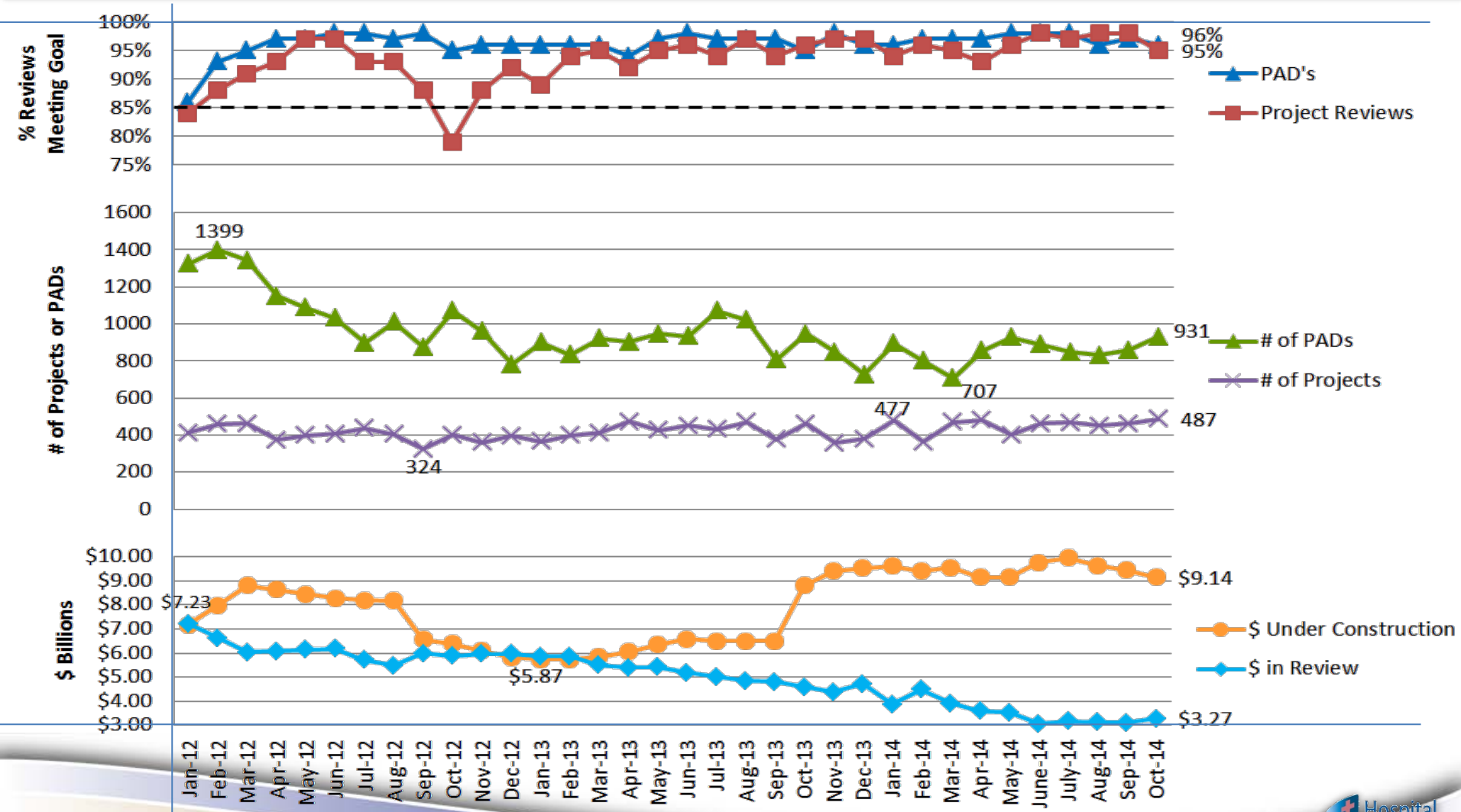

Number of Permits – 4th Qtr. 2010 thru 3rd Qtr. 2014+

Statewide combined Office and Field
Number of Permits Issued by Quarter

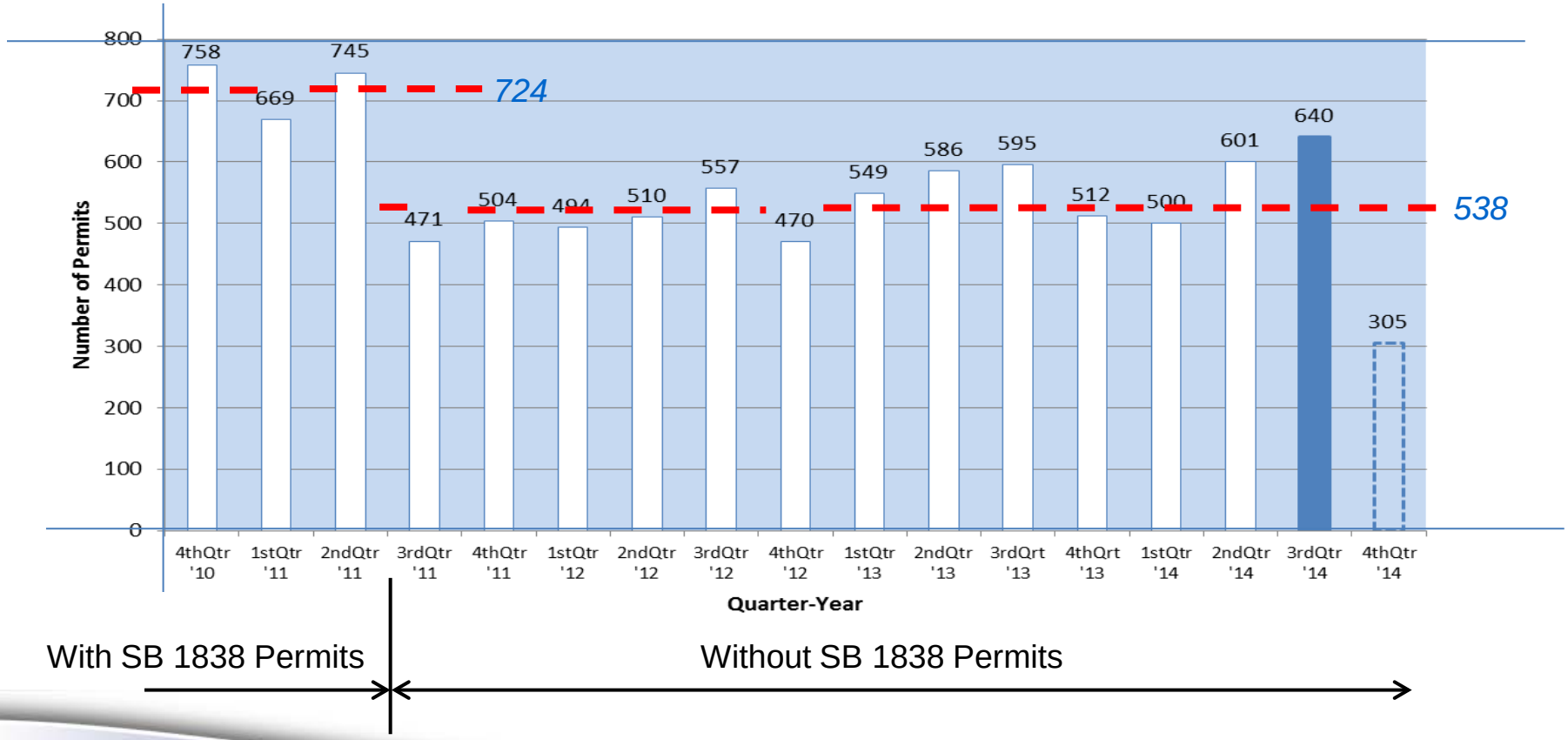

Number of SB 1838 Projects – 3rd Qtr. 2014+

Statewide
Number of SB 1838 EXEMPT Projects Approved by Quarter

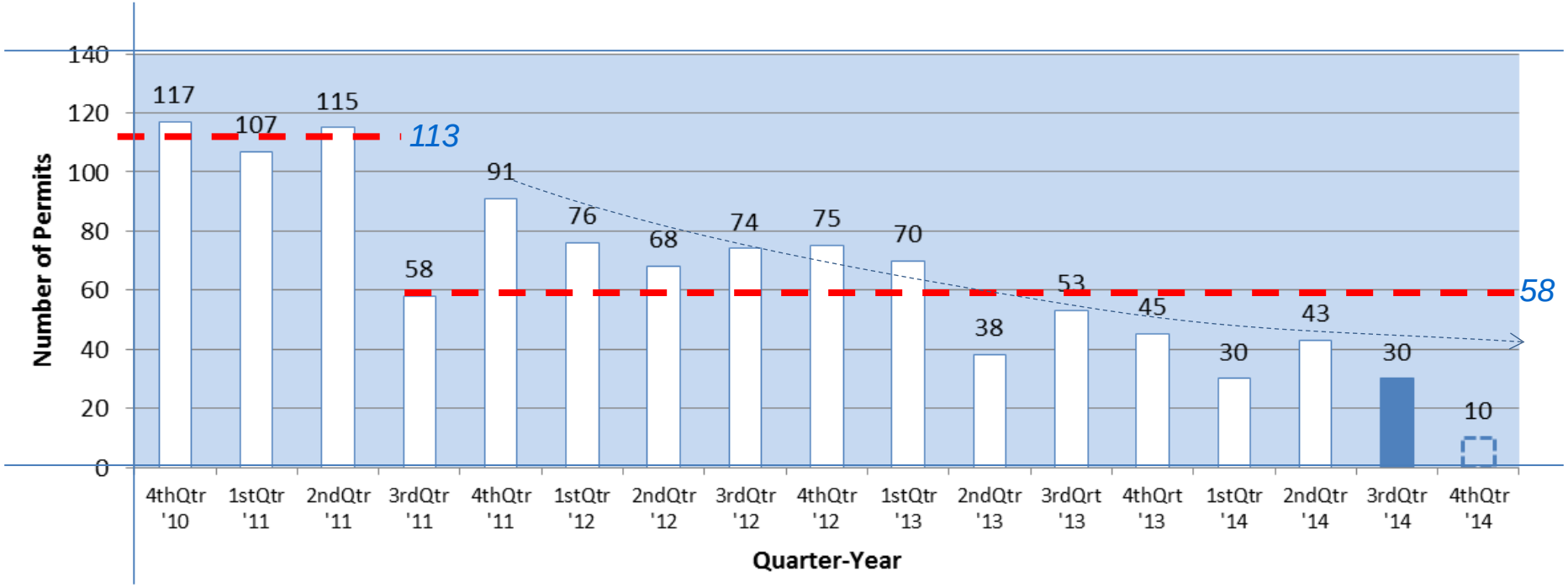

Workload in Construction Values

SNFs

	In Review	Pending Construction	In Construction	In Closure	
Central Region	$4,597,899	$2,058,691	$45,718,595	$2,473,371	
Coastal Region	$887,499	$787,700	$70,059,368	$3,348,392	
North Region	$4,030,068	$2,013,813	$18,170,747	$1,428,828	
Rapid Review Unit	$7,949,957	$6,807,871	$7,962,439	$4,319,487	
North Los Angeles Region	$22,965,239	$6,227,790	$25,316,368	$7,463,931	
South Los Angeles Region	$5,072,149	$2,178,889	$10,382,253	$12,310,313	
South Region	$4,120,950	$29,823,290	$21,099,312	$11,639,458	
Sum	$49,623,761	$49,898,044	$198,709,082	$42,983,780	$341,214,667

SNF % of Total = $341,214,667/$17,897,338,022 * 100 = 1.9%

OSHPD
Office of Statewide Health Planning and Development

Facilities Development Division

California's Building Department for Hospitals

Accomplishments for 2014 to Date

Facilities Development Division

Industry Seminars in 2014

PCI Seminar **3/26/14** Glendale

CAHF Annual Owners Symposium **4/29-30/14** Carlsbad

CSHE 43rd Annual Meeting **5/8-9/14** Santa Clara

*Tips from the Experts **5/30/14** Sacramento

CSHE Inland Empire Meeting **6/5/14** Riverside

Legrand-Petra ICS Healthcare Conference **8/20/14** Anaheim

*Hot Topics **10/9/14** Garden Grove

*Hot Topics **10/30/14** Concord

* Co-sponsored by the HBSB Education and Outreach Committee

Quarterly Meetings with Industry in 2014

- Adventist Health **1/28/14, 5/28/14, 10/16/14**
- AIA - MIA
- CAHF Quarterly Meetings **3/5/14, 6/9/14, 9/22/14**
- CHA Bi-Monthly Task Force Committee Meetings **2/4/14, 4/1/14, 6/3/14, 8/5/14, 10/7/14, 12/2/14**
- CDPH L&C **10/14/14**
  - Developing Process for Functional Program Review
  - Establishing task Group to Work on Free-Standing Acute Psychiatric Building Standards – OSHPD 5?
- CPMC **9/14/14**
- GCA - MIA

Quarterly Meetings with Industry in 2014

- LLUMC **5/21/14, 7/17/14, 11/3/14**
- SJHC **3/28/14, 6/10/14, 9/18/14, 12/4/14**
- UC Quarterly Meetings **2/27/14** Irvine, **6/12/14** UCLA, **10/23/14** UCSF

FDD's Top 3 Objectives for 2014

1. Continue to expand electronic plan review capabilities

2. Continue to expand the standard details, especially those for skilled nursing facilities

3. Continue to develop over-the-counter/computer capabilities and opportunities

FDD Accomplishments in 2014

*Rolled out eCA

- Currently 3,022 Active Public Users
- 874 Facilities
- 81% of applications are currently created by eCA

*Expanded OTCs

- In Office – one day per week per region
- Offsite – Fresno, San Bernardino, San Diego, Santa Rosa

*Expanded Standard Details

- 2013 CBC Standard Partition Wall Details – 86 pages
- 2013 CBC Standard Suspended Ceiling Details – 66 pages
- 2013 CBC Standard Gypsum Board Details – 75 pages
- 2013 CBC Standard Fire-Resistive Details – 51 pages

FDD Accomplishments in 2014

*Expanded Electronic Plan Review

- Smartboards – Virtual OTCs
- EPR Pilot with Sutter on CPMC & St. Luke's
- EPR Pilot with Stanford
- EPR Pilot with RRU using ePlan Soft/Accela in development

Implemented new OPL Program

Issued 10 Code Application Notices

Issued 6 Policy Intent Notices

Conducted Emergency Response after Napa Earthquake

Developed new SNF web page

Tech Leader assigned to SNFs

FDD Accomplishments in 2014

*Developed "How to Guides" for One-Story SNFs

#1: How To Guide For Wall-Mounted Television/Monitor Bracket Installation

#2: How To Guide For Water Heater Replacement

#3: How To Guide For Wall-Mounted Handrail Replacement

- Others in development, including How To Guide For Roof-Mounted HVAC Unit, How To Guide For Re-Roofing, How To Guide For Emergency Generator Replacement …

My Favorite How-to Guide

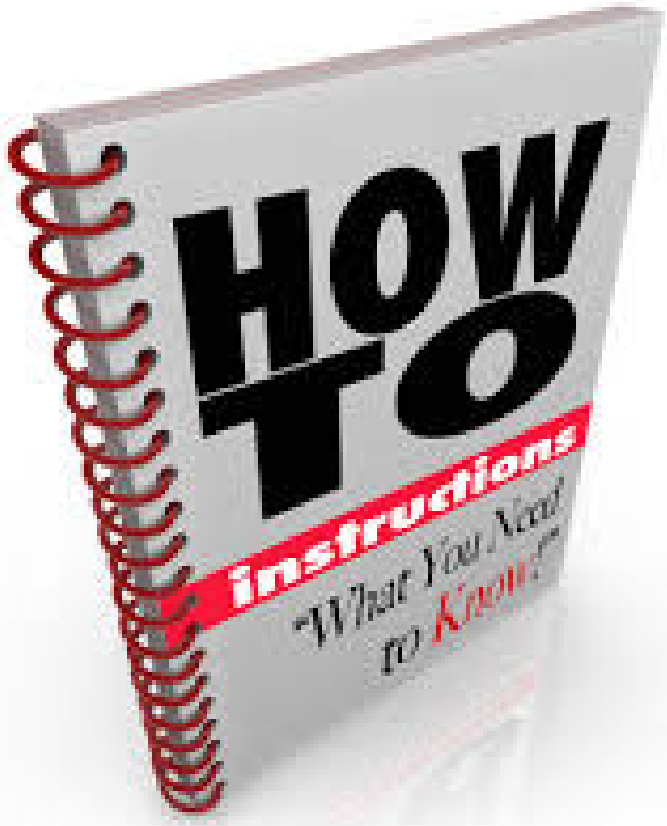

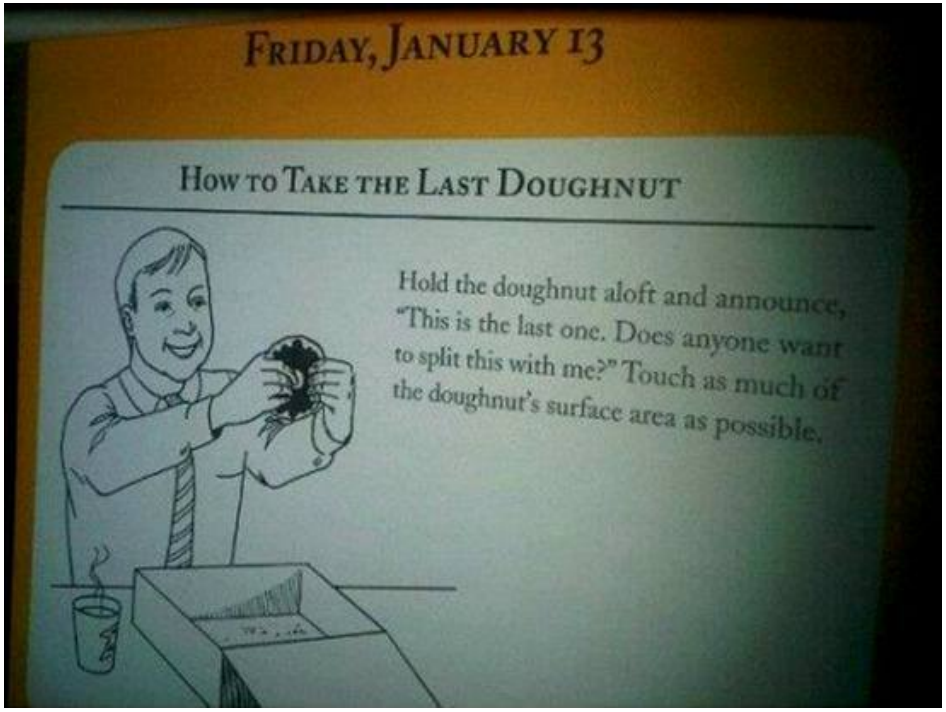

FRIDAY, JANUARY 13

HOW TO TAKE THE LAST DOUGHNUT

Hold the doughnut aloft and announce, "This is the last one. Does anyone want to split this with me?" Touch as much of the doughnut's surface area as possible.

OSHPD
Office of Statewide Health Planning and Development

Facilities Development Division

California's Building Department for Hospitals

Earthquake Early Warning System
Senate Committee Hearing
San Francisco
October 15, 2014

Facilities Development Division

EQ. Early Warning System

Testifying Before Senator Padilla

EQ. Early Warning System

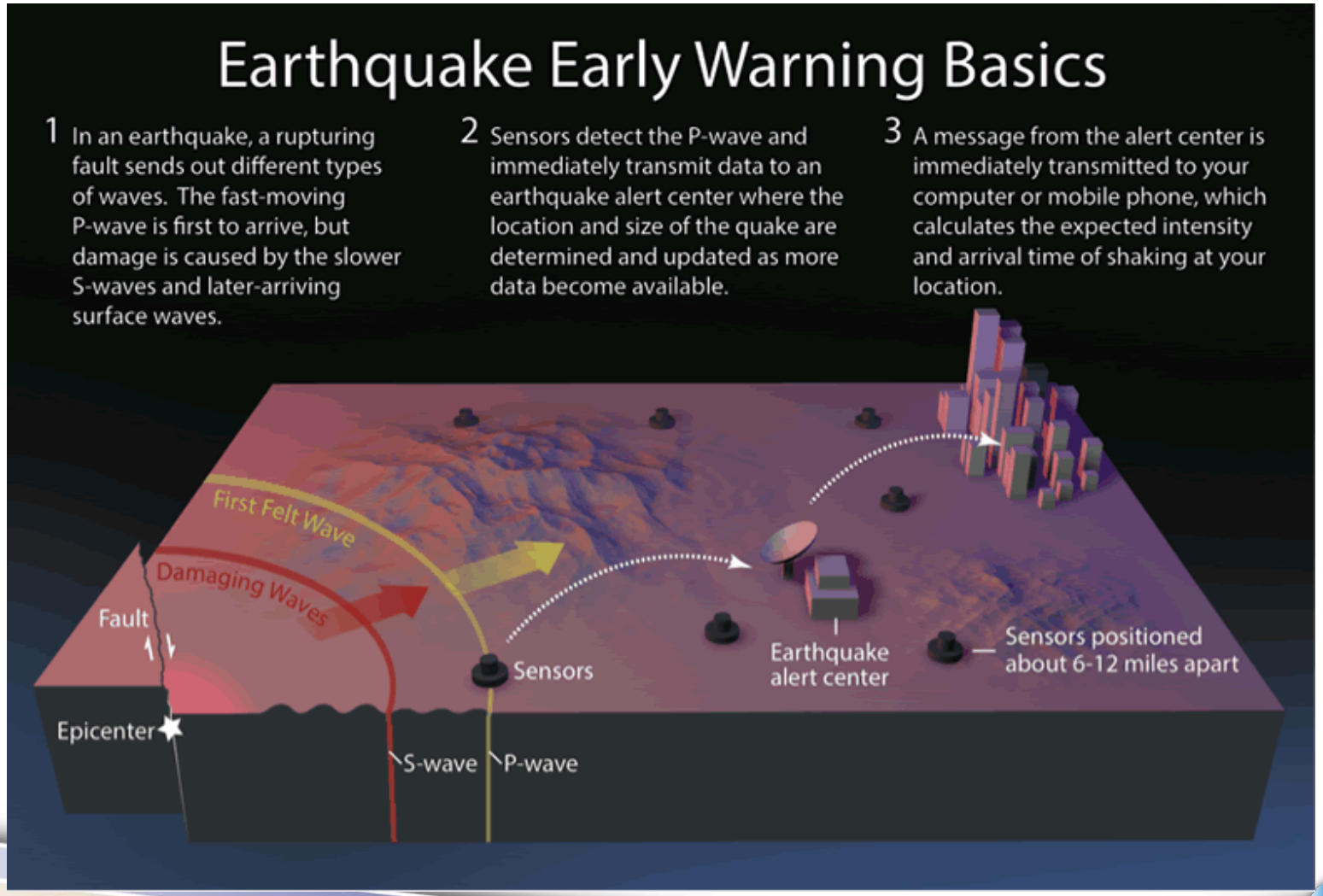

EQ. Early Warning System

- Provided overview of current hospital seismic safety

- Possible advantages of an EEWS
  - Shut down of mass transit and utility mains may reduce injuries and fire and thus reduce demand on hospitals after a major earthquake
  - Allow postponement of elective procedures
  - Allow shut-off of MRIs and other highly sensitive medical equipment
  - Provide time to brace patients and remove instruments, especially robotic and laser
  - Elimination of ten second delay for essential electrical system
  - Maintain pressure relationships needed for infection control
  - Activate go-slow elevator features before the event instead of after
  - Integration with mechanical and electrical systems, such as gas valves, boilers, chillers, etc.

EQ. Early Warning System

- Possible disadvantages of an EEWS
  - May cause panic and over-reaction
  - Time may not be adequate for many beneficial pre-emptive steps
  - False alarms could make the system untrustworthy
  - Cost would be a factor for many hospitals to integrate go-slow, automatic shutdowns, or other mechanical/electrical features while also attempting to comply with state seismic safety requirements

- The Office is committed to seismic safety
  - Pays for instrumenting two hospitals per year
  - Pays to maintain instrumented facilities
  - 68 facilities have instrumented buildings
  - 7 buildings under construction will be instrumented upon completion

OSHPD
Office of Statewide Health Planning and Development

Facilities Development Division

California's Building Department for Hospitals

FDD's Strategic/Operational Plan

Facilities Development Division

FDD's Community Map

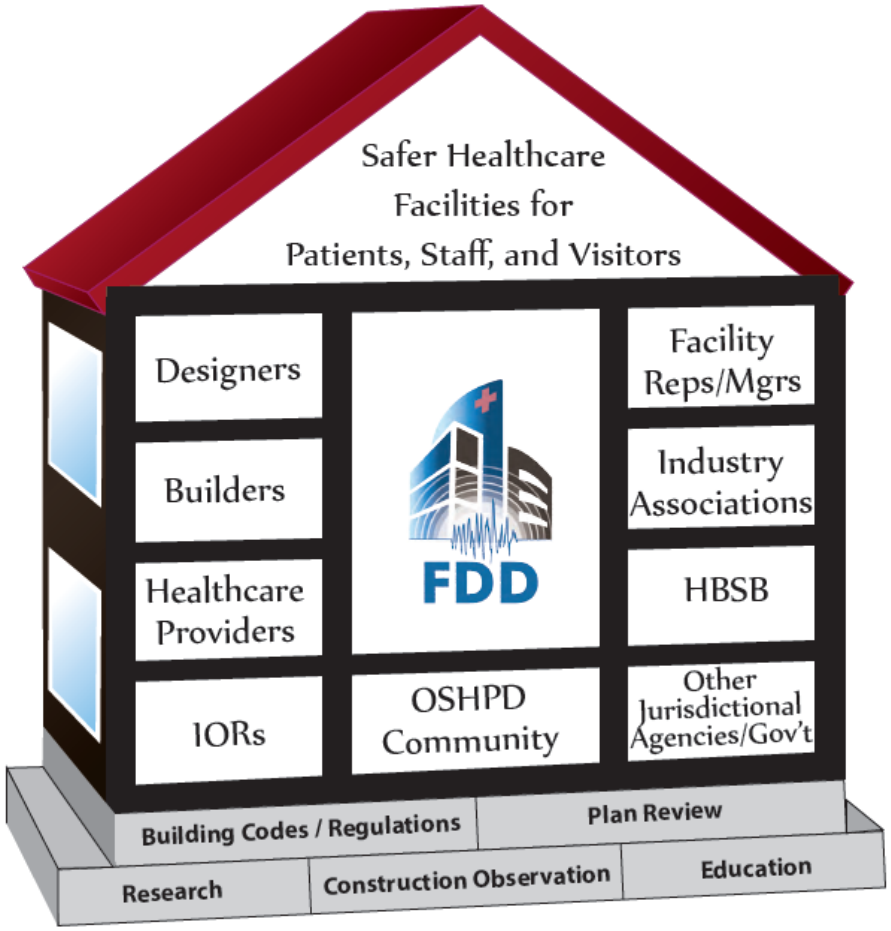

Graphic by
Colleen Tschannen

FDD can only achieve its vision by working closely with its private and public stakeholders

FDD Foundation

Foundation Group	Definition
Building Codes and Regulations	CBSC refers to the California Building Standards Code; the State's entire adopted code (i.e., the California Building Code, California Electrical Code, California Mechanical Code, California Plumbing Code, and any other adopted Building Code or Standard); also commonly referred to as Title 24 and includes all parts of Title 24, California Code of Regulations
Plan Review	The process of looking at construction plans and verifying they comply with Title 24 or (CBSC)
Construction Observation	Observe health care facilities construction to ensure compliance with applicable codes and regulations
Research	OSHPD has authority to develop and adopt emergency regulations and incorporates the latest scientific and engineering developments including monitoring to assist in seismic research. In addition, FDD has participated in research in conjunction with MCEER "Multidisciplinary Center for Earthquake Engineering Research" which is headquartered in Buffalo, NY. Other studies were conducted at UCSD which boasts the largest outdoor shake table in the US; and studies at NEES equipment site at the University of Nevada, Reno.
Education	Staff and industry education through Technical Meetings, seminars and training.

FDD Communities

Community Group	Definition
Designers	Architects, Engineers (electrical, fire protection, mechanical, structural)
Builders	Contractors, construction firms, owner-builders
Healthcare Providers	Hospitals, private, public, not-for-profit and for profit; Skilled Nursing Facilities; individuals working in a healthcare facility providing healthcare to the public
Inspectors of Record (IORs)	An individual who is (a) an OSHPD-certified hospital inspector, pursuant to the provisions of regulations, (b) selected and employed by the licensed facility's owner or representative to inspect and observe
Facilities Reps/Mgrs.	Health facility administrators or representatives designated by the owner

FDD Communities

Community Group	Definition
Industry Associations	Including but not limited to California Hospital Association (CHA); California Association of Healthcare Facilities (CAHF); National Fire Protection Association (NFPA); Association of General Contractors (AGI); Structural Engineers Association of California (SEAOC); Labor Unions (SEIU, PECG, CNA, etc.); American Institute of Architects (AIA)
Hospital Building Safety Board (HBSB)	The Hospital Building Safety Board was established by SB 419 (Alquist) in the original Hospital Facilities Seismic Safety Act of 1973. The purpose is to advise the Director of OSHPD on the administration of the Hospital Facilities Seismic Safety Act, and act as a board of appeals with regard to seismic safety and fire and life safety issues relating to hospital facilities.

FDD Communities

Community Group	Definition
Other Jurisdictional Agencies/Government	Emergency Medical Services Authority; Governor's Office of Emergency Services; Legislature; Seismic Safety Commission; California Dept. of Public Health (CDPH L&C); California Building Standards Commission; California State Fire Marshall; California Geological Survey; Division of the State Architect; International Code Council; Office of Administrative Law; Association of Bay Area Governments; USGS Earthquake Maps; Attorneys General Office; Dept. of General Services; State Personnel Board
OSHPD Community	All divisions within OSHPD

Balanced Strategic Goals

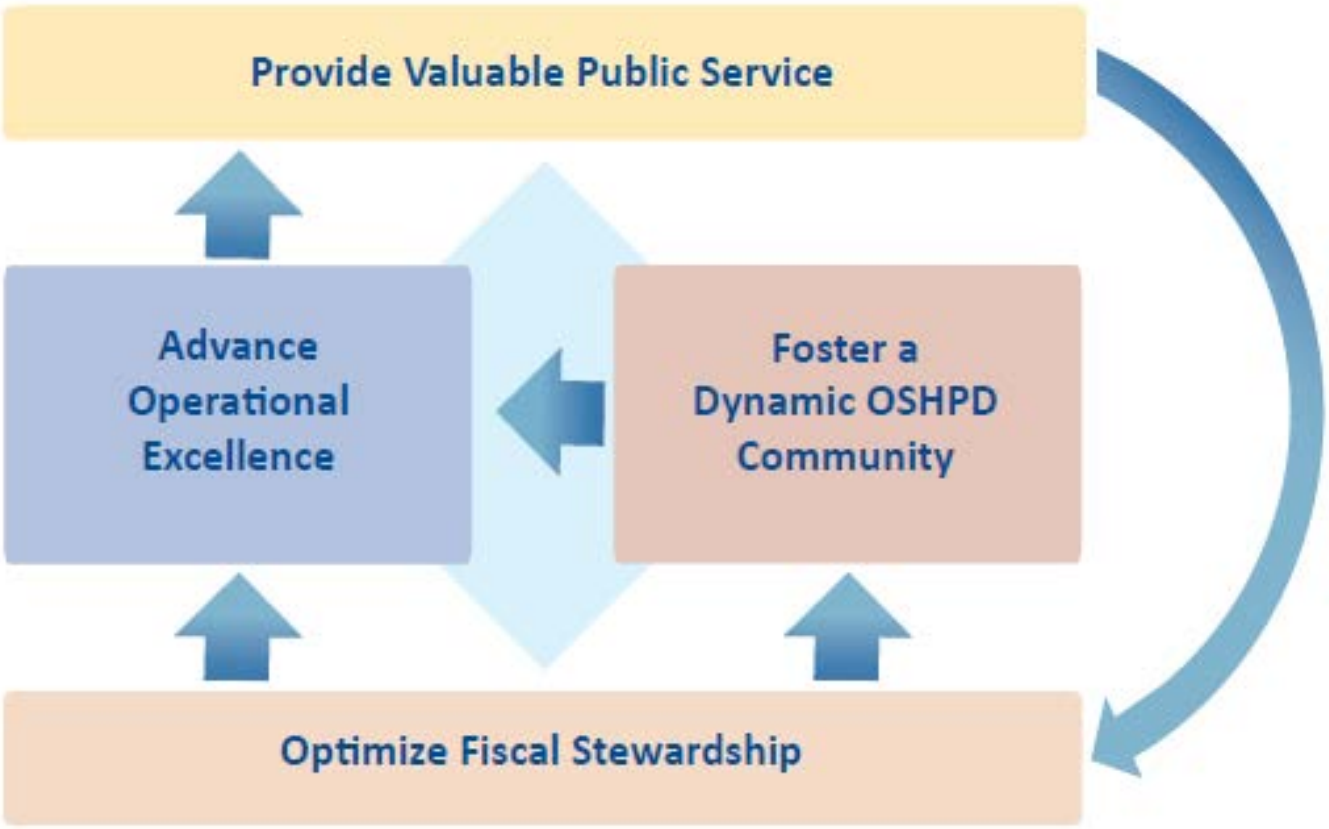

1. Provide Valuable Public Service

Goal	Emphasis	Objectives	Key Performance Indicators
1.0.0	23%	1.1.0 Add value to the design and construction of healthcare projects	1.1.1 Increase completed Quality of Service surveys to 25% of services
		1.2.0 Develop and implement procedures and enforceable building standards to ensure safe and sustainable healthcare facilities	1.2.1 Number of building standards, PINs, CANs and processes that have HBSB input prior to submittal to Building Standards Committee. Target – 90%
		1.3.0 Provide stakeholder education	1.3.1 IOR training – Target 2 seminars per year per location
			1.3.2 IOR training – Target 2 videos or webinars per year
			1.3.3 Industry training – Target 2 seminars per year

2. Advance Operational Excellence

Goal	Emphasis	Objectives	Key Performance Indicators
2.0.0	28%	2.1.0 Analyze, optimize and simplify business processes	2.1.1 Reevaluate processes and reassess metrics for OTC quarterly
			2.1.2 Reduce FDD data entry in eSP workflow on an ongoing basis
		2.2.0 Maximize appropriate technology and equipment to keep pace with industry	2.2.1 Deploy equipment & software within a reasonable time
			2.2.2 Train staff to use appropriate technology
			2.2.3 Compare our equipment to what is currently available and would be effective. Measure: Cost to provide current equipment benefit
		2.3.0 Assess and improve staff performance, provide effective staff training and facilitate interdisciplinary communication	2.3.1 Complete triage worksheets and reevaluate system estimated review hours for all disciplines by 12/31/14
			2.3.2 Establish level of compliance with field staff performance goals by 12/31/14
			2.3.3 Provide training for staff code, CAN, process, etc.) and perform QA for effectiveness of training at least two times a year

3. Foster a Dynamic OSHPD Community

Goal	Emphasis	Objectives	Key Performance Indicators
3.0.0	23%	3.1.0 Foster an environment of learning and growth	3.1.1 Develop minimum training requirements for each classification by December 31, 2014.
			3.1.2 Classes staff wants to take/learn as listed in their annual IDPs (to be continuously tracked through TRAIN system).
			3.1.3 Annual job satisfaction survey from employees
		3.2.0 Promote active, open communications	3.2.1 Seek staff feedback on technical issues and address at semi-annual technical meetings.
			3.2.2 Quarterly regional/unit (field and office combined) meetings to foster staff communication.
			3.2.3 FDD office-wide annual staff meeting at Sacramento or Los Angeles office
		3.3.0 Recognize outstanding performance and foster an environment of respect and motivation	3.3.1 Give staff opportunities to pursue areas of appropriate FDD work that they find interesting (track through annual IDP).

4. Optimize Fiscal Stewardship

Goal	Emphasis	Objectives	Key Performance Indicators
2.0.0 Onward	26%		4.1.1 Determine cost of each type of service by 07/01/15
		4.1.0 Assess new & existing billable services and align services with fees	4.1.2 Evaluate cost effectiveness of each type of service by 07/01/15
			4.1.3 Explore new billable services and create list by 07/01/15
		4.2.0 Cost validation of construction costs	4.2.1 Timely closure of projects and collection of fees by closing at least 85% of projects within 6 months of issuance of construction final effective 4.2.2 Complete X number of project cost estimates and final cost audits by 01/01/15
		4.3.0 Improve process for collections and leverage the operations to capture and collect outstanding fees	4.3.1 Track number of additional applications restricted/denied based on outstanding fees

Current Accounts Receivable = $16.6 Million

FDD Risk Log

#	Risk/Issue	Likelihood 1-3	Impact 1-5	Time 1-3	Higher Score is more critical	Before Action	After Action	Owner
1	Loss of revenue/loss of work sufficient to cover FDD's operating expenses	3	5	2	30	Reduce expenses when and where possible; fill temporary positions rather than permanent/full-time positions	Evaluate staffing needs	Paul Coleman
2	The Los Angeles office move - DGS wants to reuse our current furniture	3	4	2	24	Ship some of the current projects to the Sacramento office; set up temporary alternative workstations	Authorize overtime/work from home to catch up on the work	Gordon Oakley

FDD Risk Log

#	Risk/Issue	Likelihood 1-3	Impact 1-5	Time 1-3	Higher Score is more critical	Before Action	After Action	Owner
3	DSE salary increase effective 07/01/14 may encourage retirements.	2	3	2	12	Fill the 2 current vacant DSE positions	Reclassify additional positions and fill them with DSEs; divert office staff to the field	Paul Coleman
4	FDD's lack of ability to make changes to codes and regulations due to CEQA requirements	3	3	1	9	Issue retainer contracts for CEQA consultants	Process proposed code changes and regulations to the California Building Standards Commission	Chris Tokas
5	eSP goes down for a week or more / loss of Internet connectivity	1	3	1	3	Maintain current redundant backup environments	Resort to paper application submittals, if necessary; use backup environments	Gary Dunger/ BSU

FDD Initiatives List

Priority Rank	Initiative	Goal	Owner	Coordinator	Start Date	Implementation Date
1	Add request to execute the Quality of Service Survey to Closure letters	ValPubSrv	eSP / Dunger	eSP / Dunger, Blunt	05/29/14	07/01/14
1	Identify all business processes & eliminate ineffective, redundant processes	OpEx	All FDD	FDD Dep Director	05/29/14	07/01/15
2	Identify existing technology to meet our business needs	OpEx	Sups	Division Chiefs	Ongoing	Ongoing

OSHPD
Office of Statewide Health Planning and Development

Facilities Development Division

California's Building Department for Hospitals

Operational Plan Roll-Out
October 28, 2014

Facilities Development Division

FDD Operational Plan Roll-Out

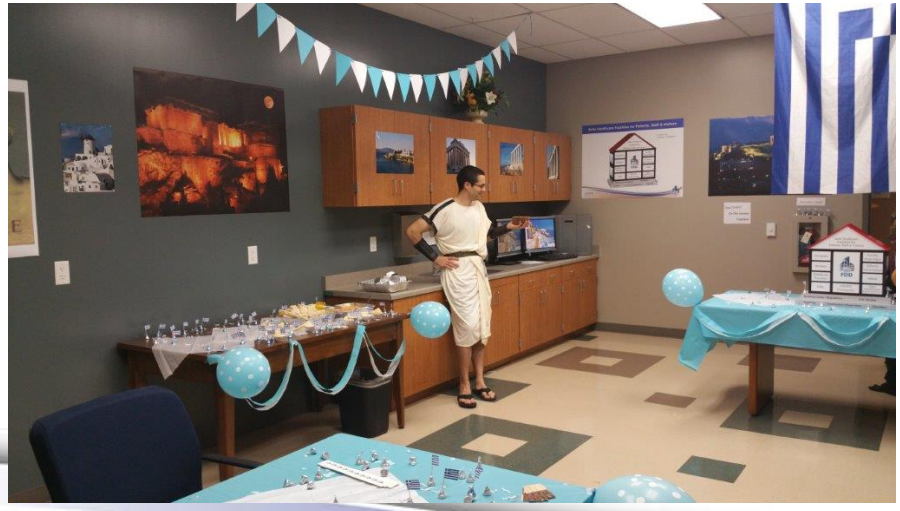

The Tour Started in Greece

The Mad Greek

FDD Operational Plan Roll-Out

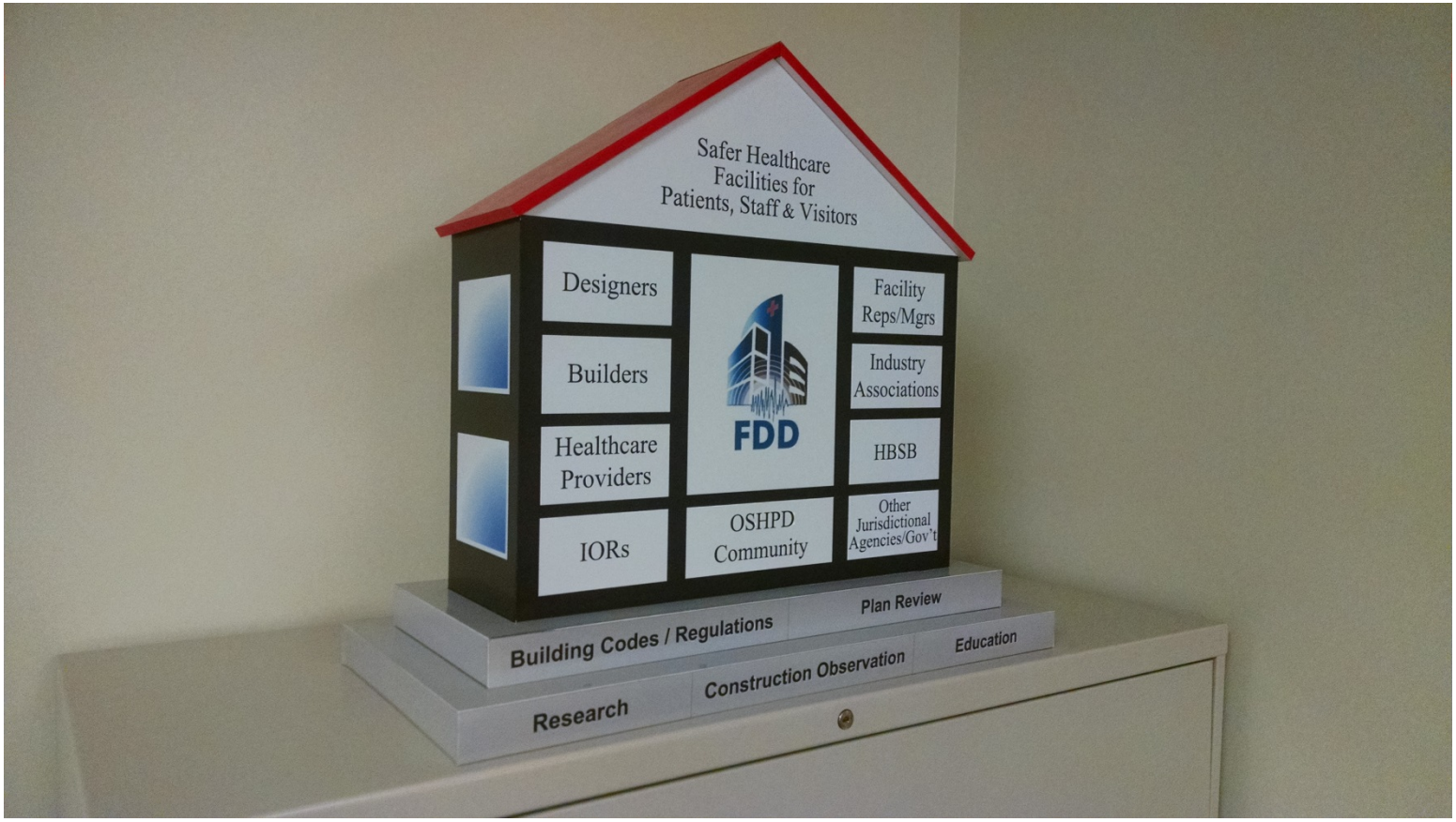

Community Map Model

Constructed by Chris Tokas

FDD Operational Plan Roll-Out

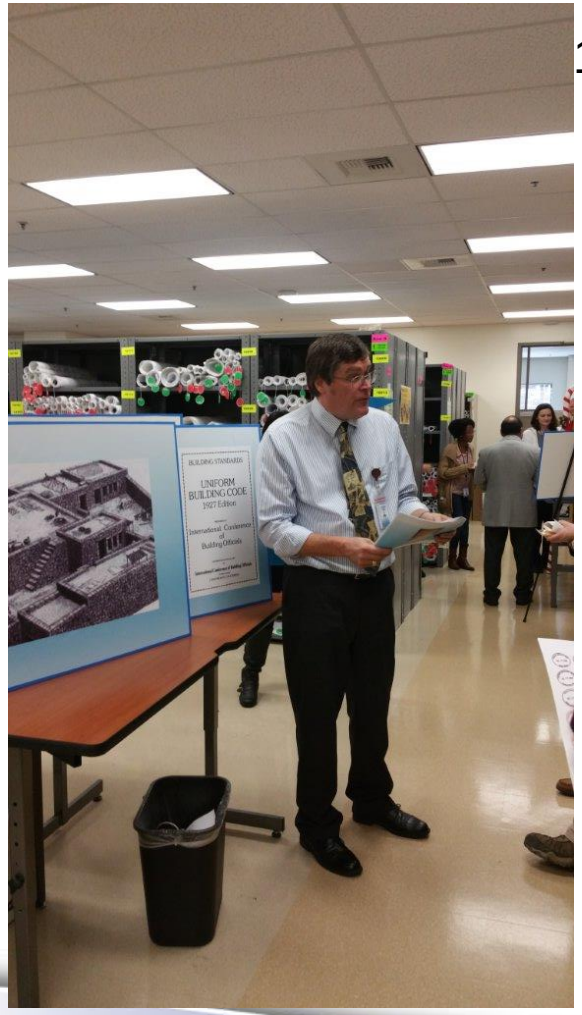

1. History of Building Codes

   Eric Jacobsen

2. Current Plan Review Process

   Hussain Bhatia

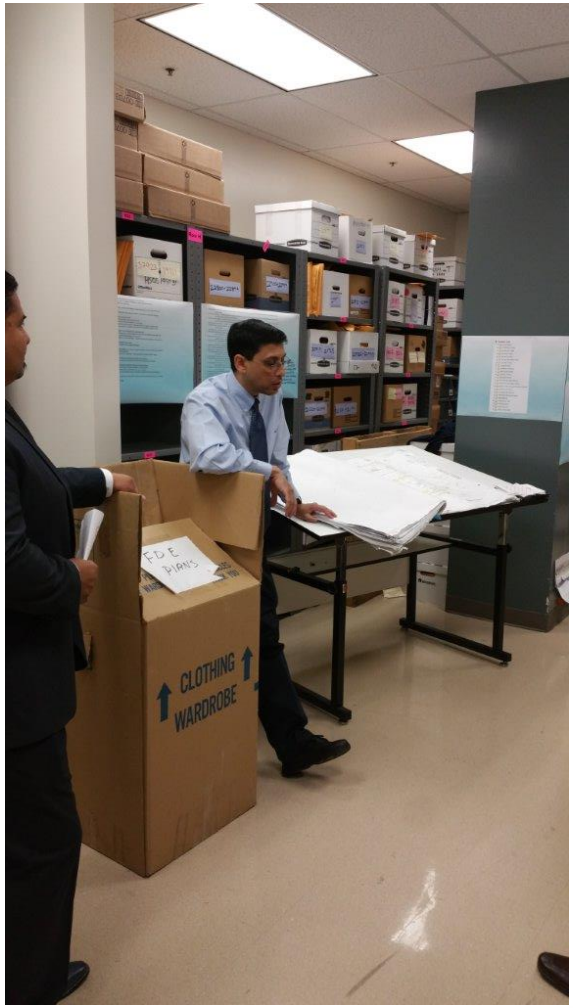

FDD Operational Plan Roll-Out

3. Current Electronic Plan Review Process in RRU

   Diana Scaturro

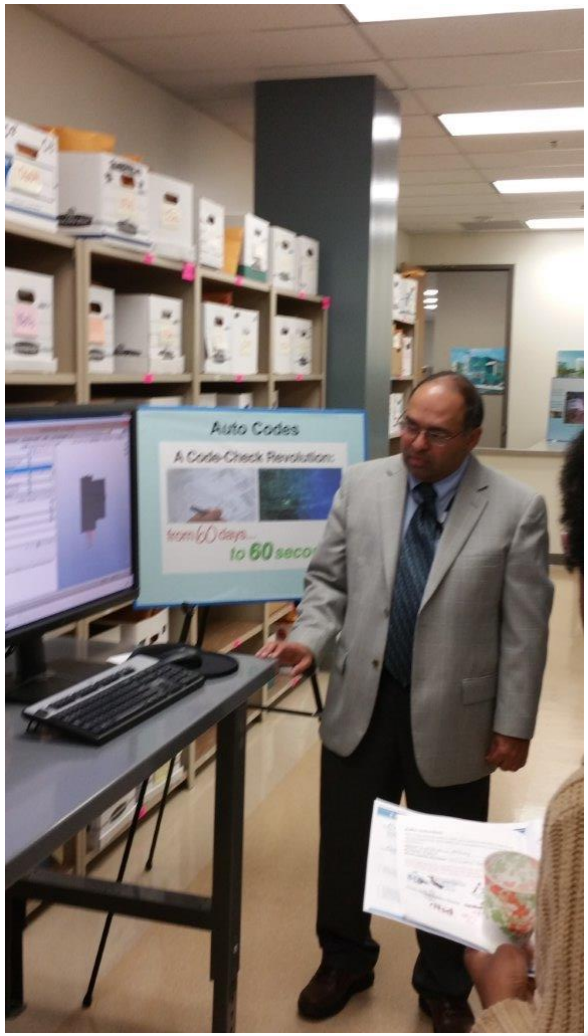

4. Auto Codes - The Future of Plan Review

   Roy Lobo

FDD Operational Plan Roll-Out

Dumb Board

Smart Board

5. The Field Component of FDD

???

FDD Operational Plan Roll-Out

Donuts and coffee for FDD provided and served by the Director's Office on Wednesday, November 12

Assessment of Lath & Plaster Metal-Stud Partitions

Presentation at HBSB Meeting
By Rami Elhassan

November 20, 2014

Introduction

- Seismic retrofit: SPC2/NPC3 + New ICU, Pharmacy, Labs, other TI's
- Included bracing of hundreds of (E) wall-mounted equipment and cabinetry
- Lath & plaster metal-stud partition walls – inadequate and needed to be reconstructed or improved
- Cost and disruption associate with seismic bracing very significant

RUSCH

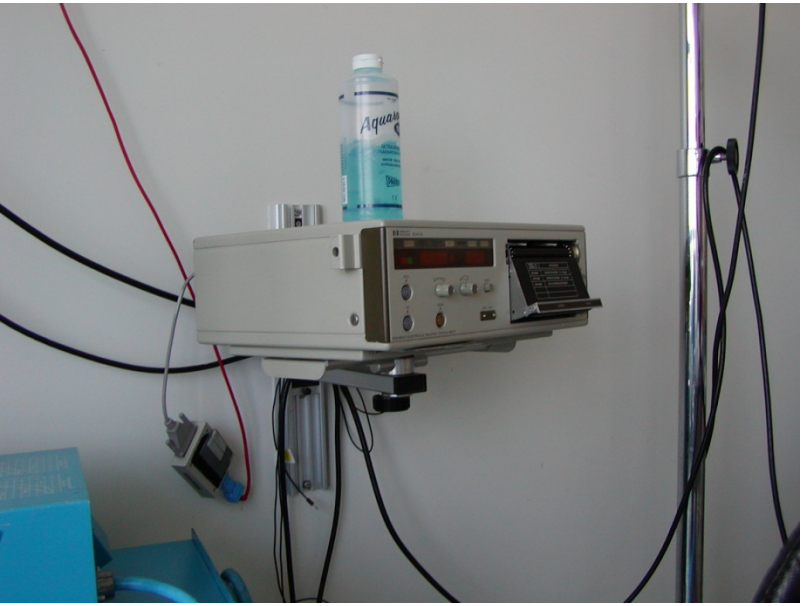

Retrofit Option 1: "Remove and Replace"

1. Remove cabinet/equipment
2. Demo partition (keep/support conduits, etc)
3. Completely rebuild (metal studs and drywalls), including backing plates for equipment attachment
4. Re-install equipment

Retrofit Option 2: "Sister Studs"

1. Remove equipment
2. Demo plaster and lath on one side of the wall
3. "Sister" existing studs and improve stud connections to floor and ceiling
4. Provide new/improved backing plates for equipment attachment
5. Refinish the wall surface to match adjacent plaster
6. Re-install equipment

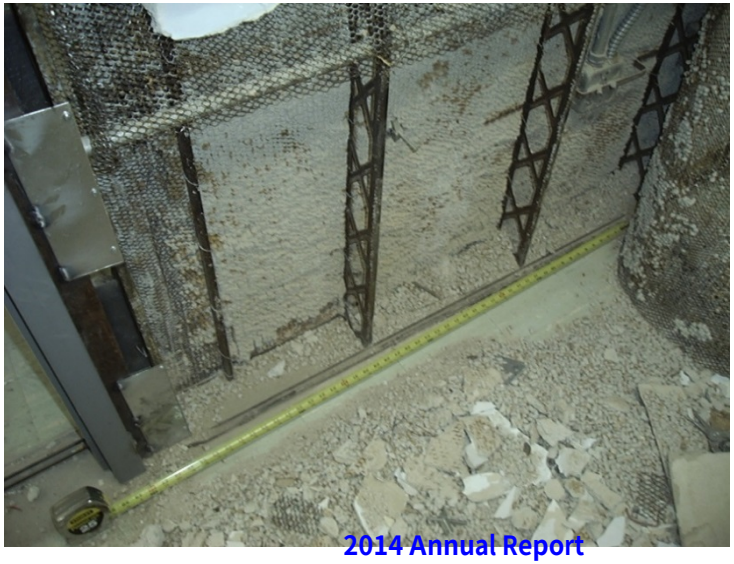

Retrofit Option 3: "Improve (E) Partitions"

- To minimize interruption and cost an assessment program was developed that aimed to quantify capacity of (E) partition walls:

1. Investigation/ material testing
2. Analytical assessment
3. In-situ testing/assessment

Investigation/ Material Testing

- Obtain stud profile and top & bottom connections

STUD PROFILE

- Develop & execute OSHPD-approved material testing program (ASTM A370 & E350)

MATERIAL PROPERTY

(Program is OSHPD Approved)

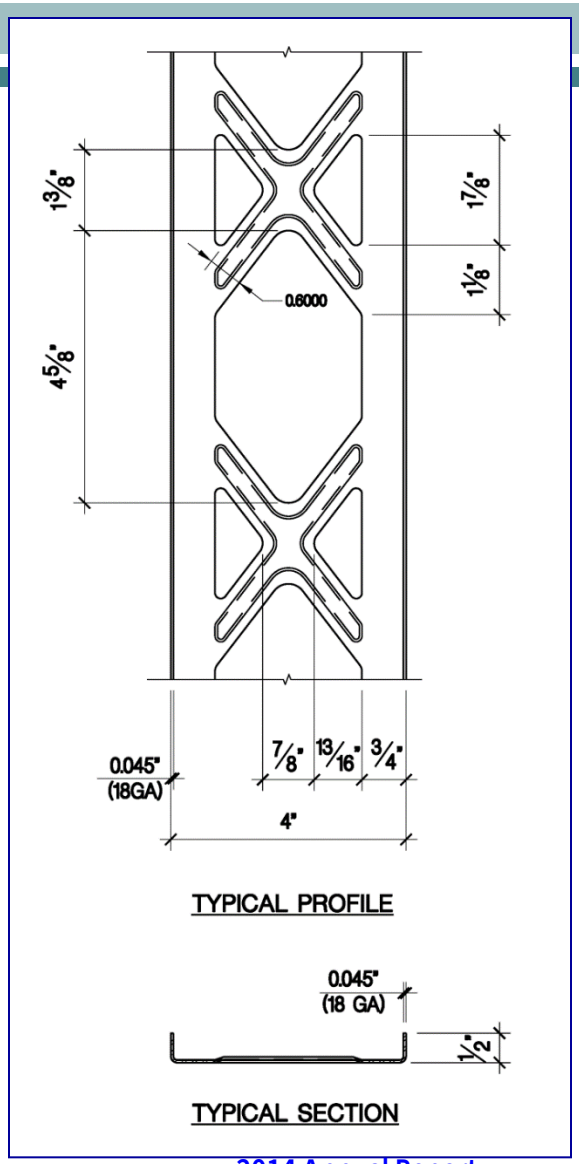

Analytical Assessment

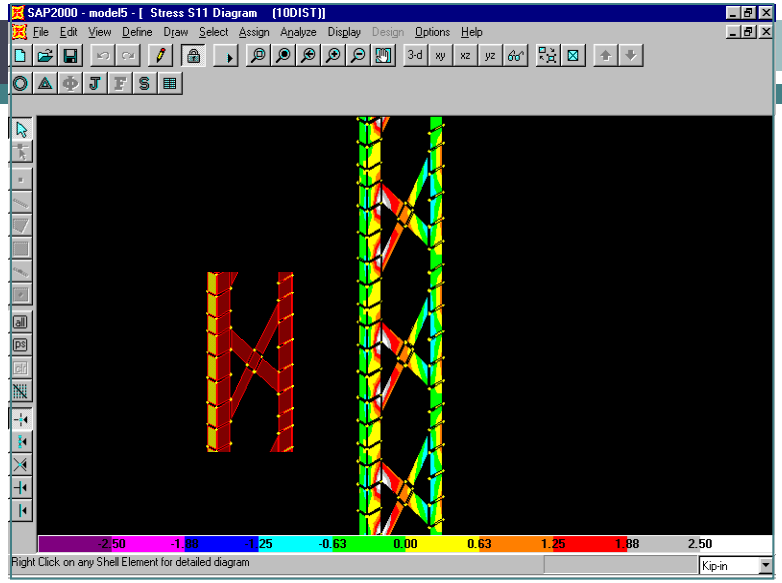

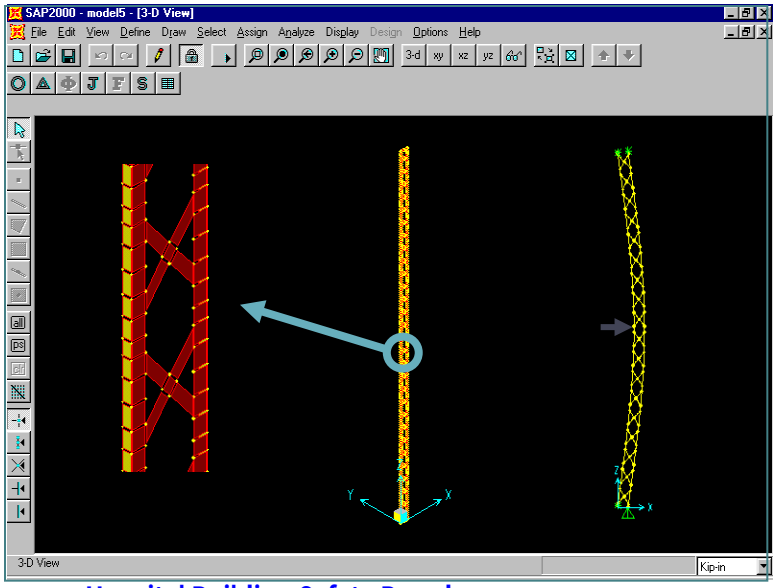

COMPUTER/
FINITE ELEMENT
ANALYSIS

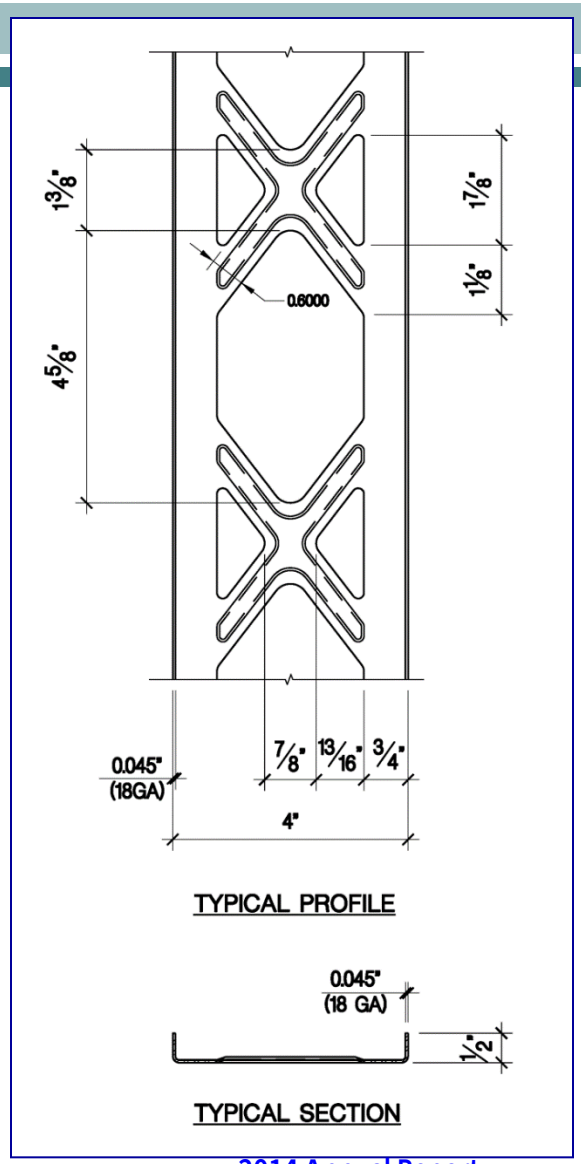

Analytical Assessment

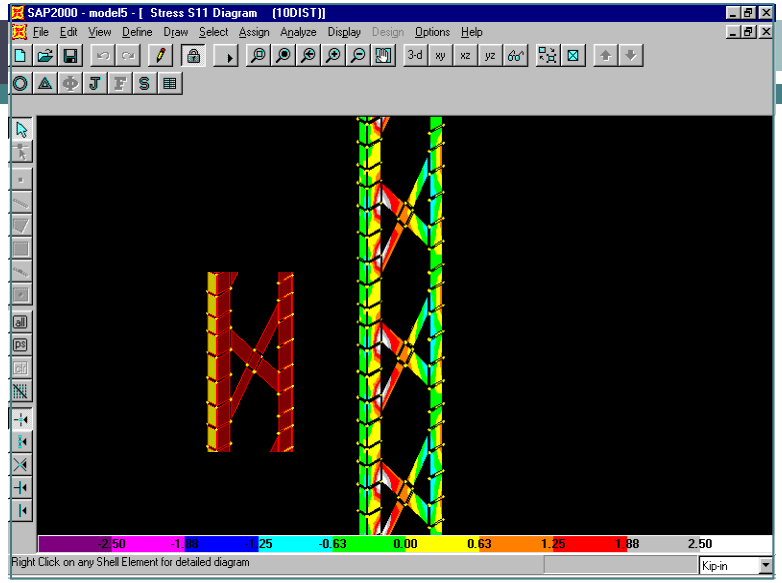

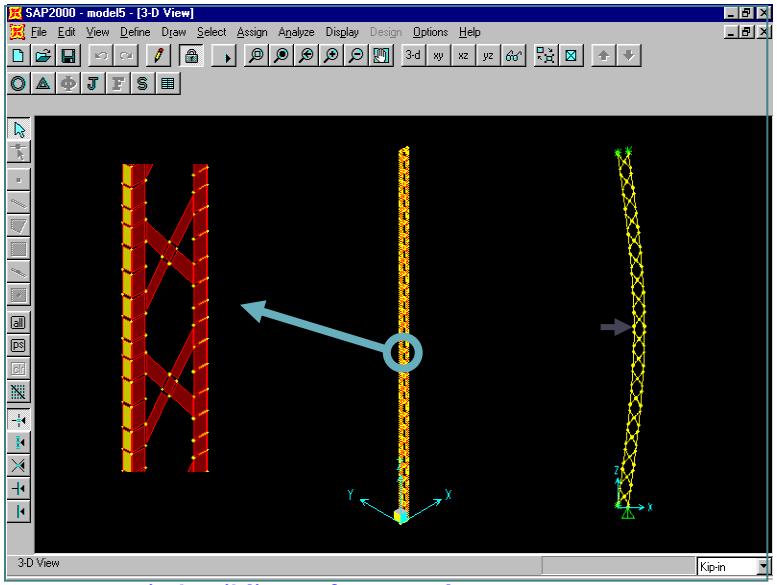

- <u>If</u> top of the wall is braced then each stud can support about 300# lateral force applied at mid-height, based on flexural capacity
- Shear capacity is <u>not critical</u>
- However, bottom concrete anchors capacity is <u>unknown</u>

Development of Testing Program

- Brace top of wall
- Test studs for flexure
- Test studs for shear
- Test concrete anchors at bottom (nails at 2’ or 4’ o/c)

Development of Testing Program

Studs:

- Apply a "cyclic" single mid-height load as standard for all tests
- Force a "flexural failure" of the existing partition/stud
- "Shear failure" investigated separately thru localized bottom connection tests – Push with "airbag" to ensure an equal distribution of load

Concrete Anchors:

- Full-height partitions: Studs welded to cont. bot. track, attached to floor with nails at 2' o/c
- Ceiling-height partitions: Studs welded to ¾" framing channels at each side of stud, nailed to floor at 4' o/c

Development of Testing Program

- Test types (18 tests):
  1. As-built anchor/concrete nail (4 tests)
  2. As-built bottom wall segment (3+3 tests)
  3. Braced-top, CH wall segment (5 tests)
  4. Braced-top, FH wall segment (3 tests)
- Develop capacity of assembly and "design criteria" based on test results (OSHPD)

Testing program will cost about $350k but with estimated saving of $4.0M+

Testing of Concrete Anchors

Testing of Concrete Anchors

- Expose track near (E) concrete anchor
- Trim (E) track and weld a steel load plate that is designed to slide on the concrete floor
- Apply direct shear to concrete anchor through existing track
- Increase load monotonically until failure

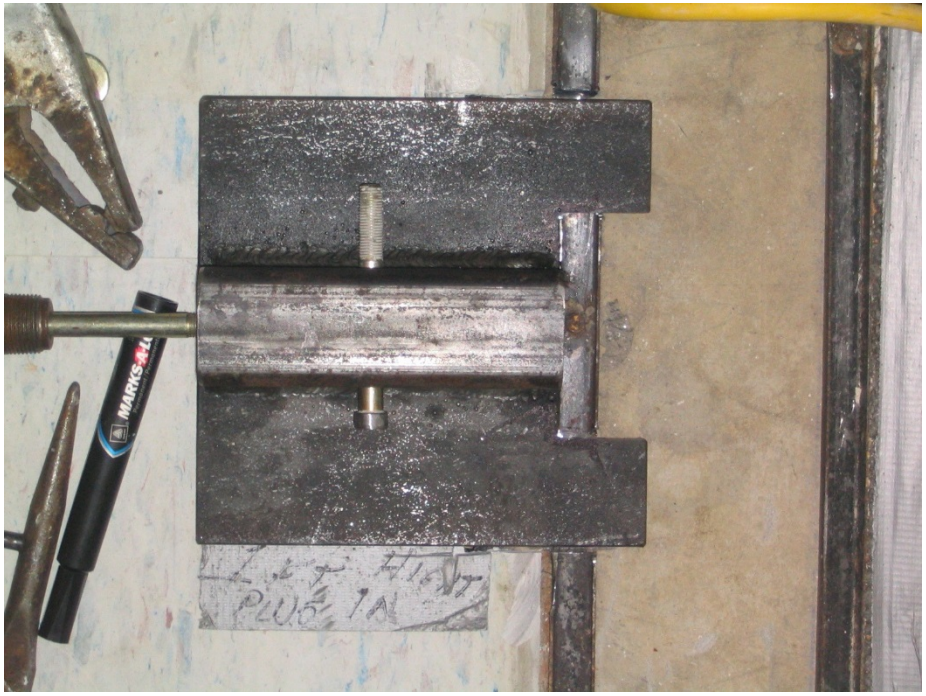

Testing of Concrete Anchors

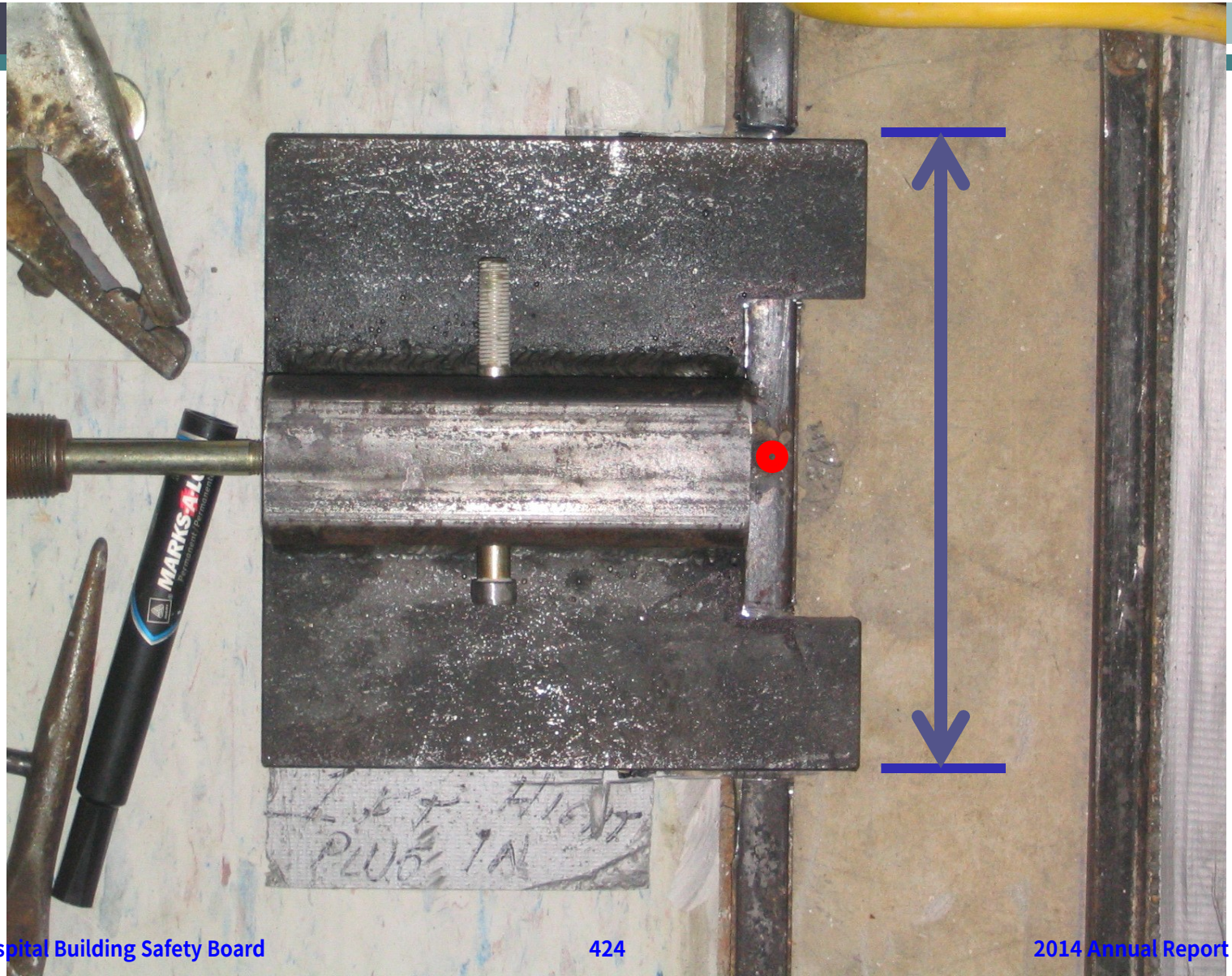

Testing of Concrete Anchors

Testing of Concrete Anchors

Testing of Concrete Anchors

Testing of Concrete Anchors

Test Label	Location	Max Load (lb.)	Anchor Description (Depth, and Diameter) (in.)	Comments
AV-1	Basement Test	1,044	L = 1.33 and ϕ = 0.173	Pull-Out Failure
AV-2	5TH Floor Test	1,168	L = 0.82 and ϕ = 0.12	Pull-Out Failure
AV-3	7TH Floor Test No. 1	487	L = 0.82 and ϕ = 0.12	Pull-Out Failure
AV-4	7TH Floor Test No. 2	667	L = 0.82 and ϕ = 0.12	Pull-Out Failure

Partition Shear/Sliding Tests

Partition Shear/Sliding Tests

- Consider segment that includes 2 to 4 studs
- Isolate the test sample from the surrounding partition
- Apply increasing monotonic load thru airbag
- Monitor applied load and displacements (string pods)

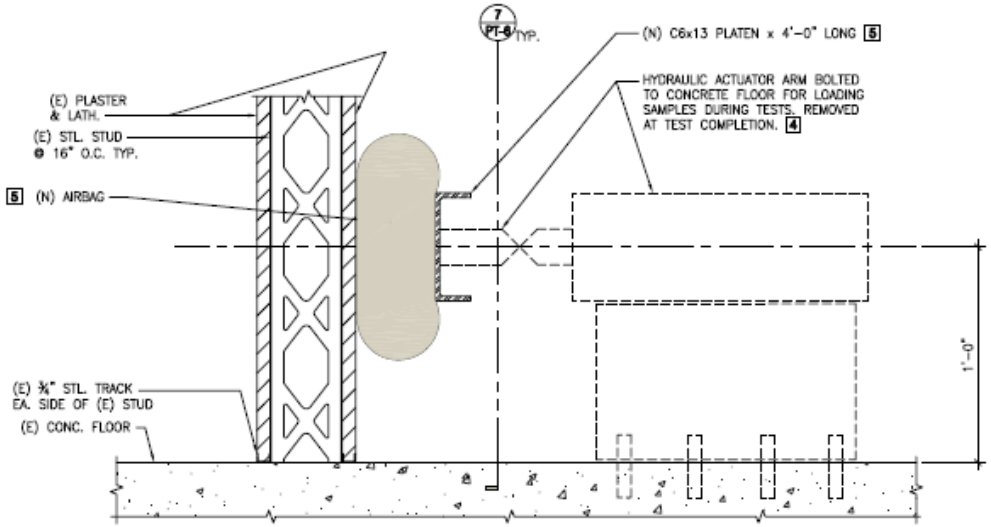

Partition Shear/Sliding Tests

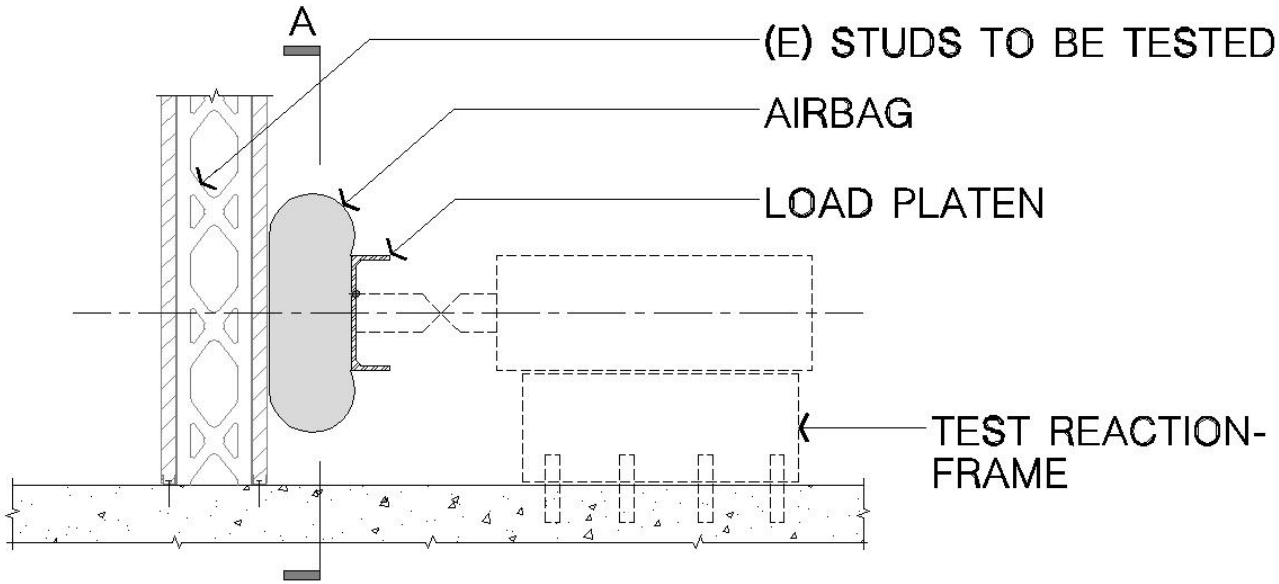

BCC SECTION

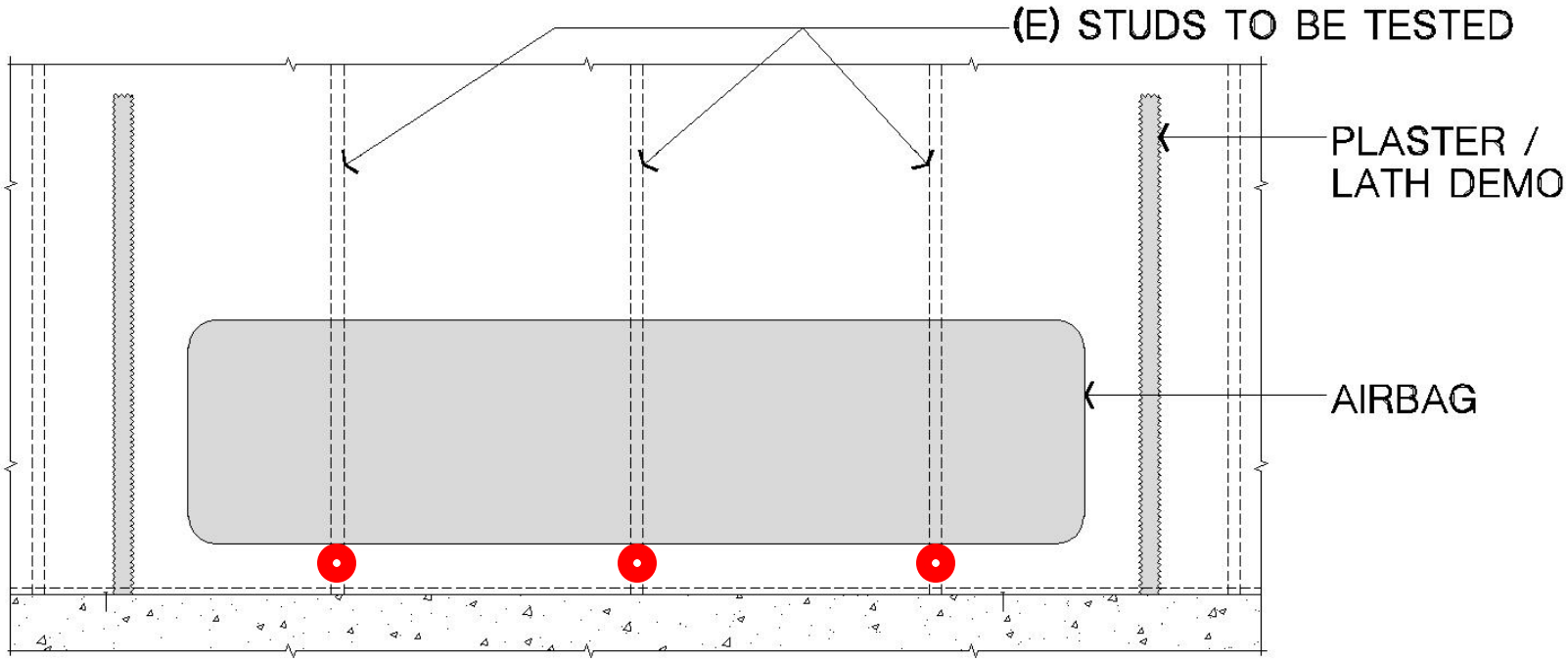

BCC ELEVATION A-A

Partition Shear/Sliding Tests

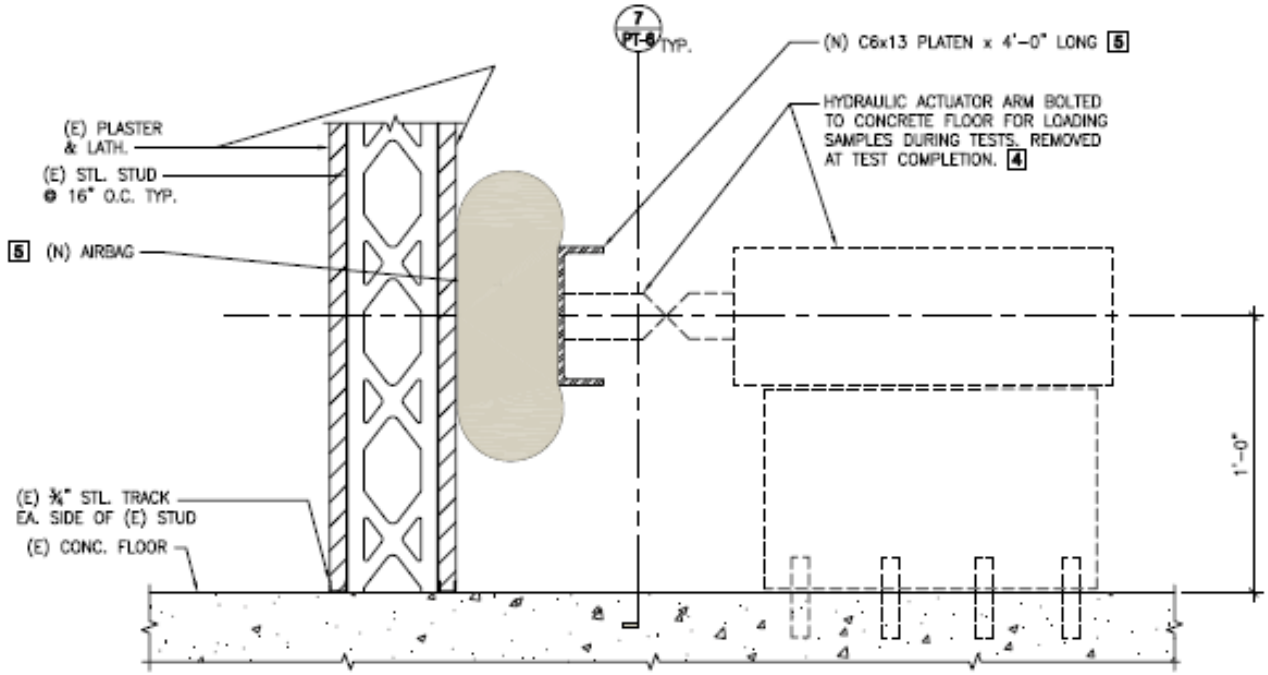

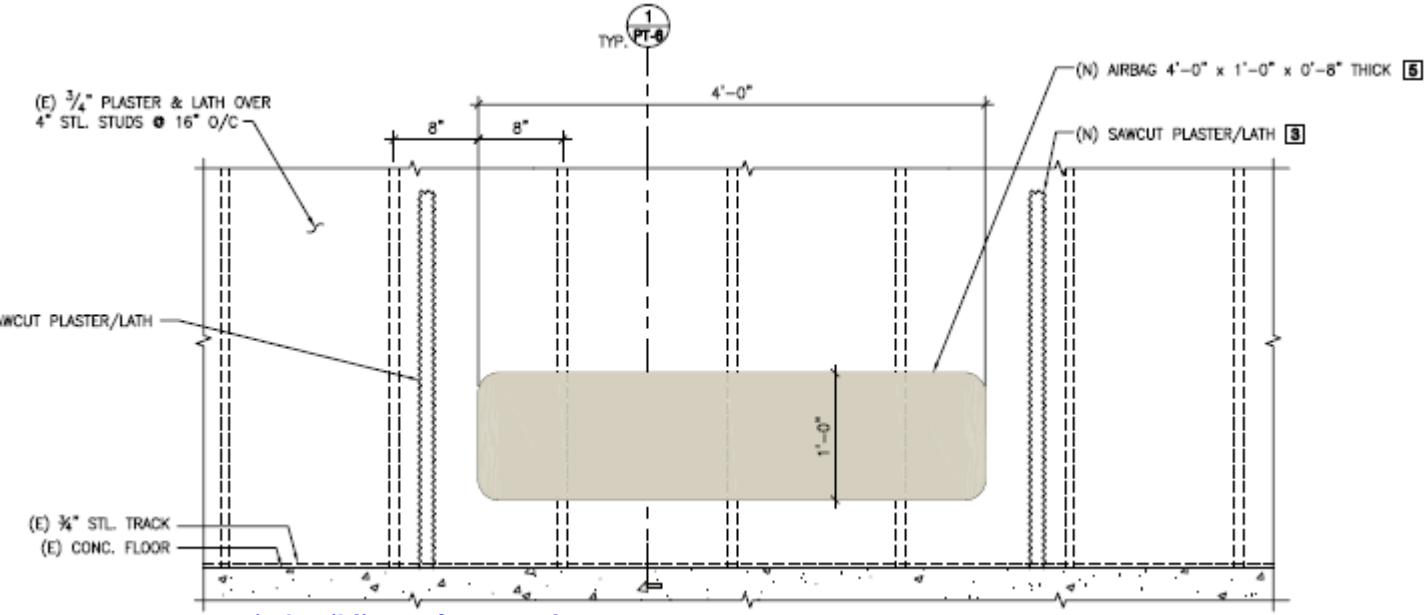

Partition Shear/Sliding Tests

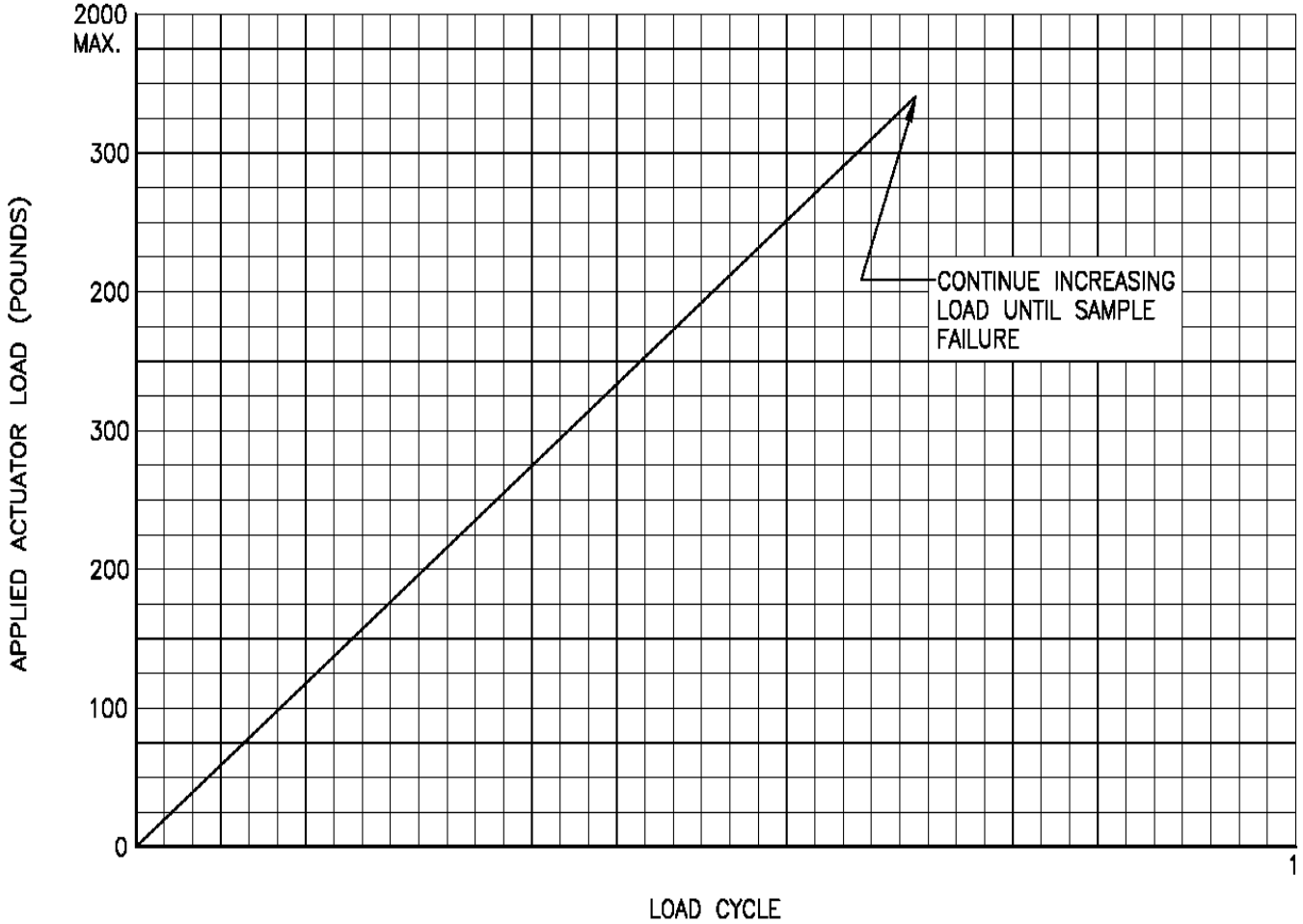

MONOTONIC LOADING PROTOCOL

Partition Shear/Sliding Tests

- Force and displacements digital data was collected and used to produce "Load-History" and "Load-Deflection" curves for each test for all channels (load actuator and string pots)
- Tests were recorded by photos and videos
- At the conclusion of each test, each partition sample was deconstructed to document existing conditions and failure modes

Partition Shear/Sliding Tests

Partition Shear/Sliding Tests

Partition Shear/Sliding Tests

Partition Shear/Sliding Tests

Partition Shear/Sliding Tests

Partition Shear/Sliding Tests

Partition Shear/Sliding Tests

Partition Shear/Sliding Tests

Partition Shear/Sliding Tests

Partition Shear/Sliding Tests

Partition Shear/Sliding Tests

Partition Shear/Sliding Tests

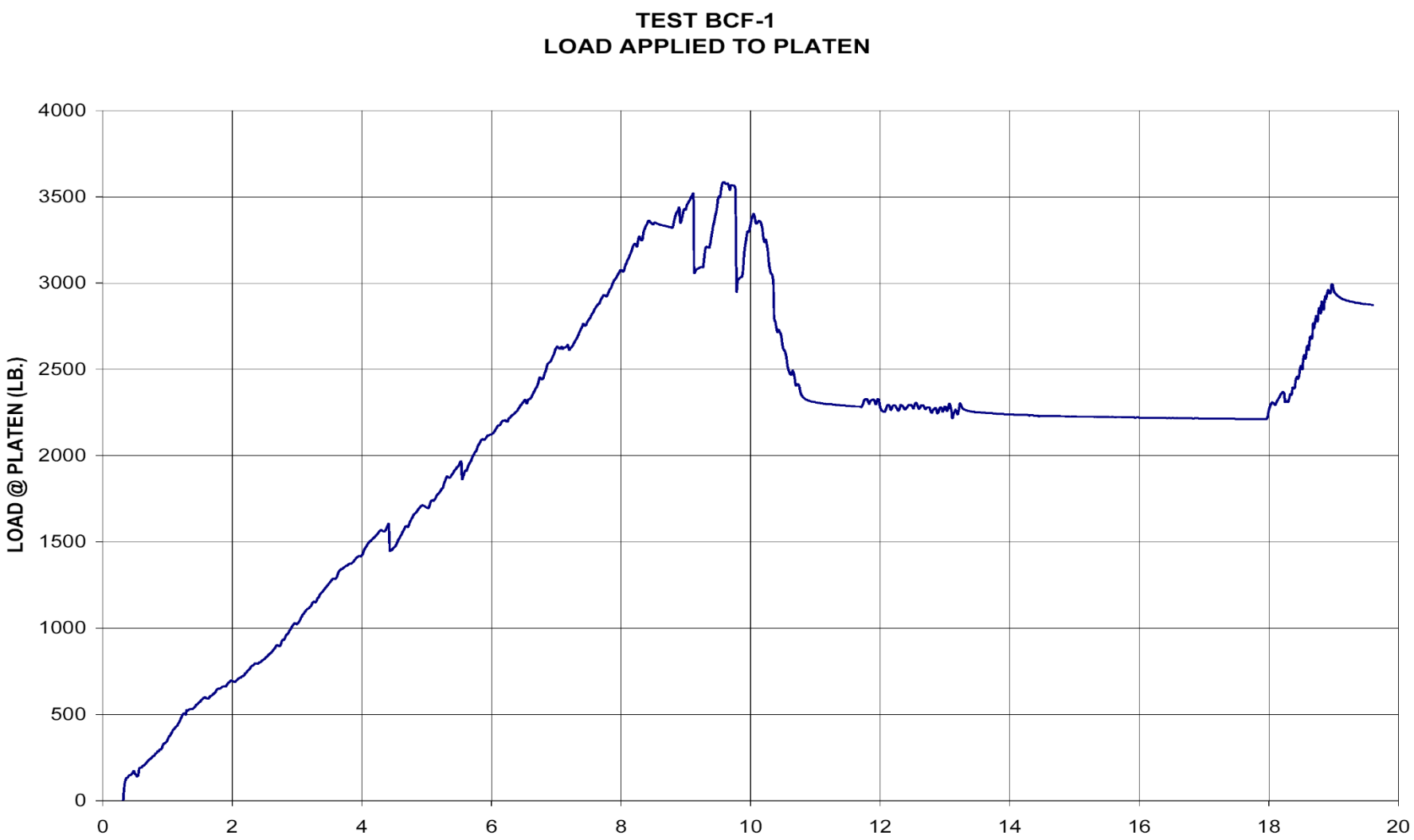

Partition Shear/Sliding Tests

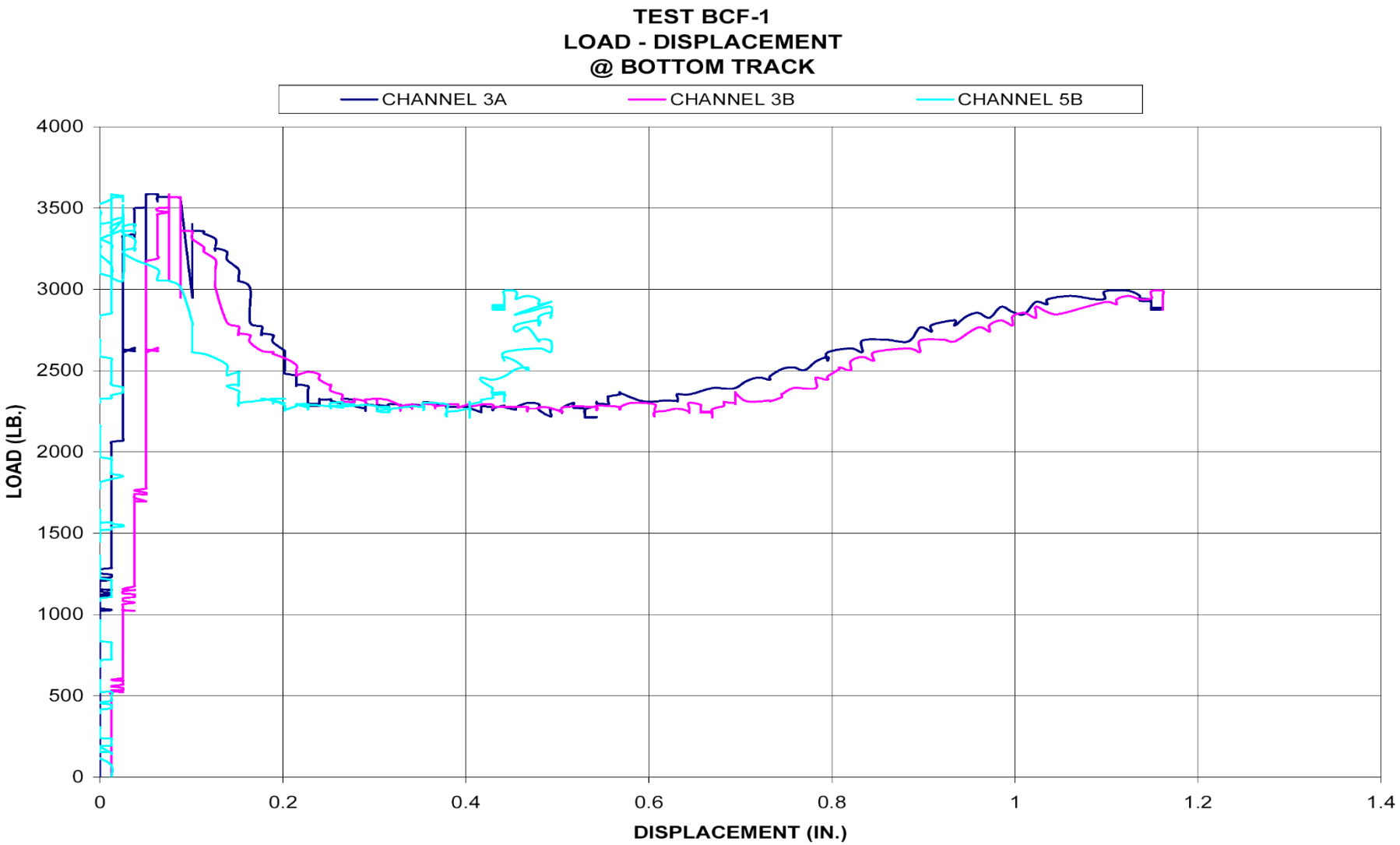

Partition Shear/Sliding Tests

Partition Shear/Sliding Tests

Test Label	Location	Max Load (lb.)	# Studs Resisting Load	Load per Stud (lb.)	Comment
BCC-1	5TH Floor Test	3,126	4	782	Tested to Failure
BCC-2	7TH Floor Test No. 1	2,945	3	982	Test stopped to preserve bottom connections for subsequent testing
BCC-3*	7TH Floor Test No. 2	1,430	3	477	Test stopped upon discovery of (E) track cut (prior to test)

Partition Shear/Sliding Tests

Test Label	Location	Max Load (lb.)	# Studs Resisting Load	Load per Stud (lb.)	Comment
BCF-1	5TH Floor Test	3,584	3	1,195	Tested to Failure
BCF-2	7TH Floor Test No. 1	1,602	2	801	Test stopped to preserve bottom connection for subsequent testing
BCF-3	7TH Floor Test No. 2	1,760	2	880	Test stopped to preserve bottom connection for subsequent testing

Partition Shear/Sliding Tests

Test Label	Stud ID	Tested Capacity Per Stud (lb.)	F.S.	Design Capacity Per Stud (lb.)	Comments
BCC-1	Left	782	1.67	468	Tested to Failure
BCC-1	Center L	782	1.67	468	
BCC-1	Center R	782	1.67	468	
BCC-1	Right	782	1.67	468	
BCC-2	Left	982	1.67	588	Test stopped to preserve bottom connection for subsequent testing
BCC-2	Center	982	1.67	588	
BCC-2	Right	982	1.67	588	
			Average	520	
			St. Dev.	64	
			C.O.V.	12.3%	

Partition Shear/Sliding Tests

Test Label	Stud ID	Tested Capacity Per Stud (lb.)	F.S.	Design Capacity Per Stud (lb.)	Comments
BCF-1	Left	1,195	1.67	716	Tested to Failure. Stud Crushing.
BCF-1	Center	1,195	1.67	716	
BCF-1	Right	1,195	1.67	716	
BCF-2	Left	801	1.67	480	Test stopped to preserve bottom connection for subsequent testing
BCF-2	Right	801	1.67	480	
BCF-3	Left	880	1.67	527	
BCF-3	Right	880	1.67	527	
			Average	594*	
			St. Dev.	116	
			C.O.V.	19.4%	

Partition Shear/Sliding Tests

Ceiling-Height Partition Bottom-Track Reaction Capacity	868 lb.
Full-Height Partition Bottom-Track Reaction Capacity	930 lb.

Partition Shear/Sliding Tests

Full Partition Tests

- Test a partition segment that includes 2 studs
- Isolate the test sample from the surrounding partition
- Brace the top of partition just above the ceiling
- Remove plaster and install backing plate and refinish with dry wall
- Apply direct cyclic load to backing plate

Full Partition Tests/ Ceiling-Height

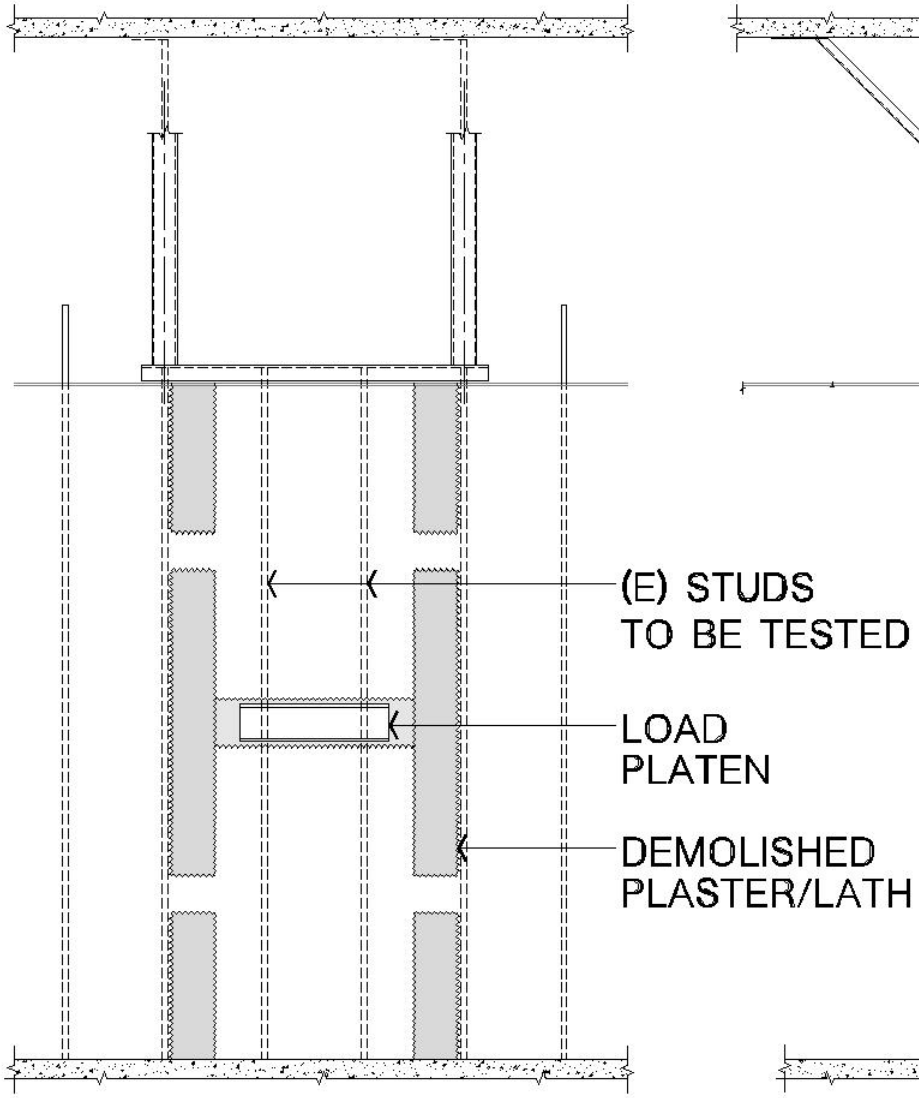

CHT ELEVATION

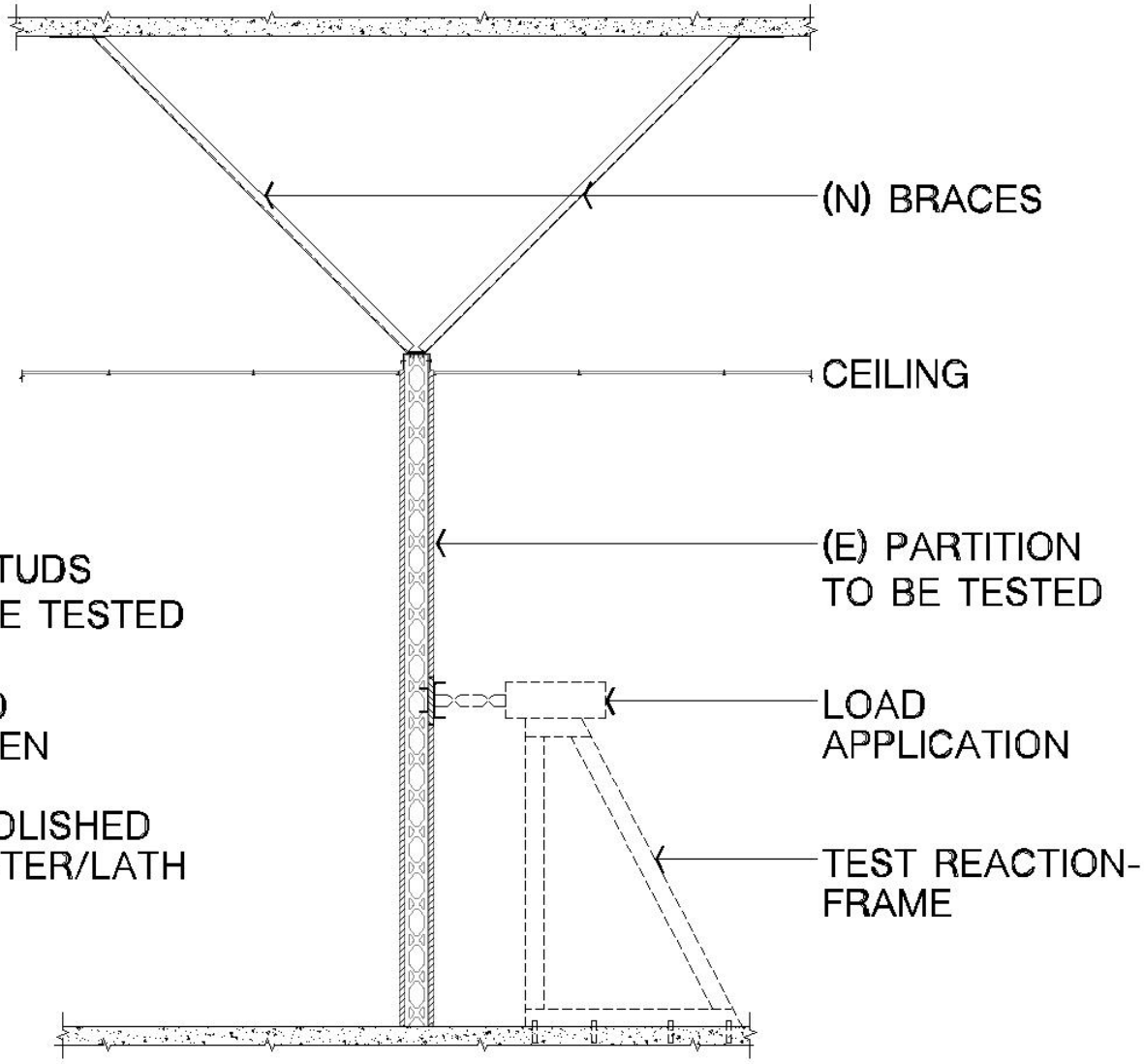

CHT SECTION

Full Partition Tests/ Ceiling-Height

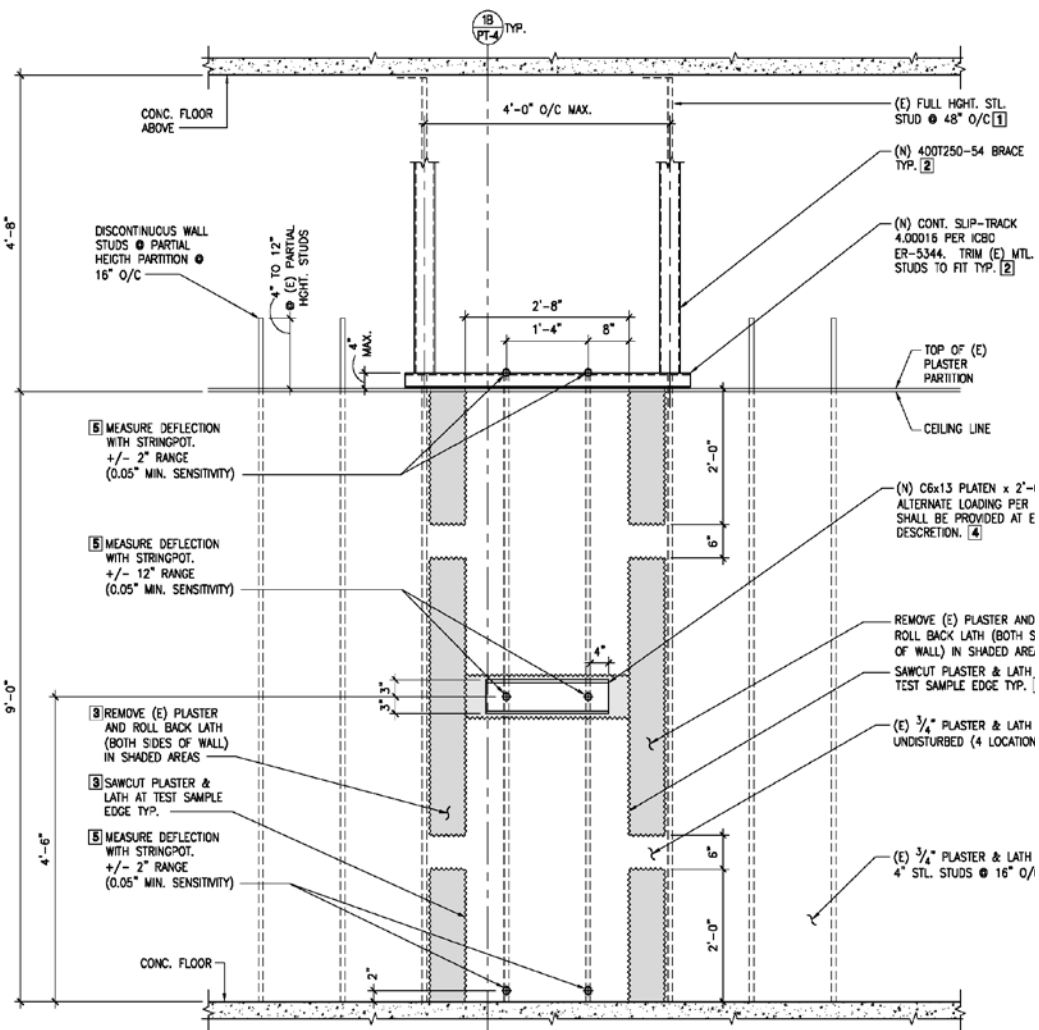

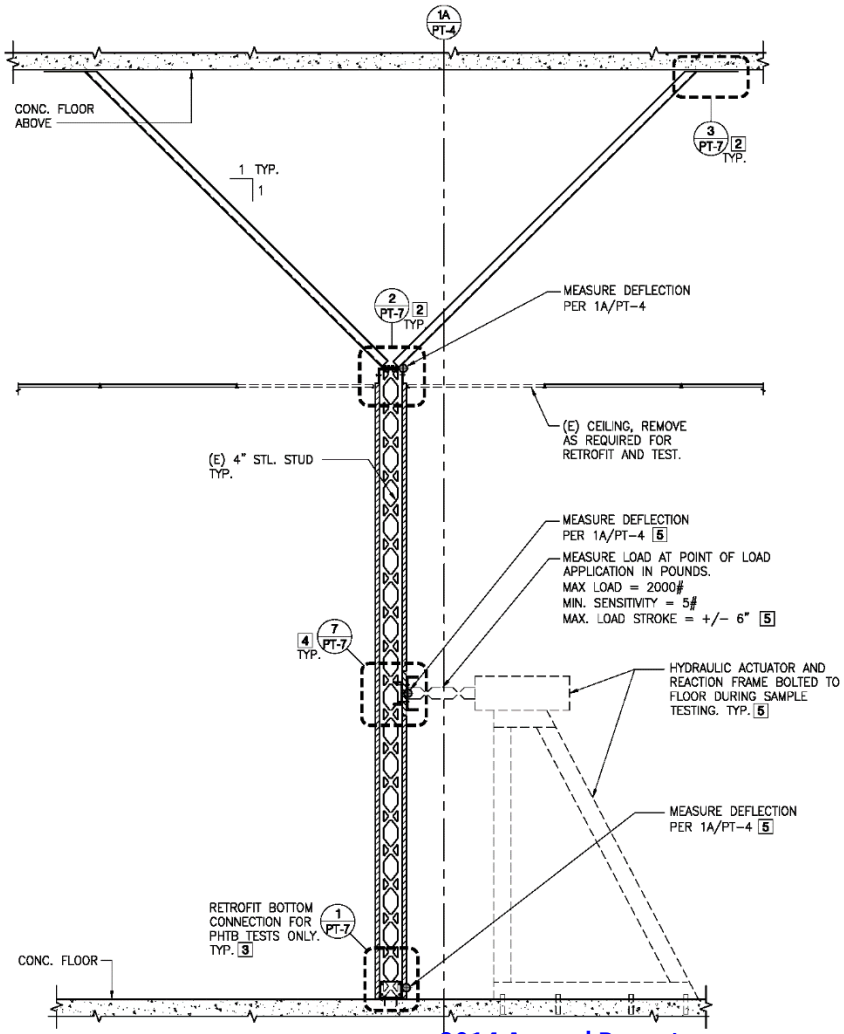

Full Partition Tests/ Full-Height

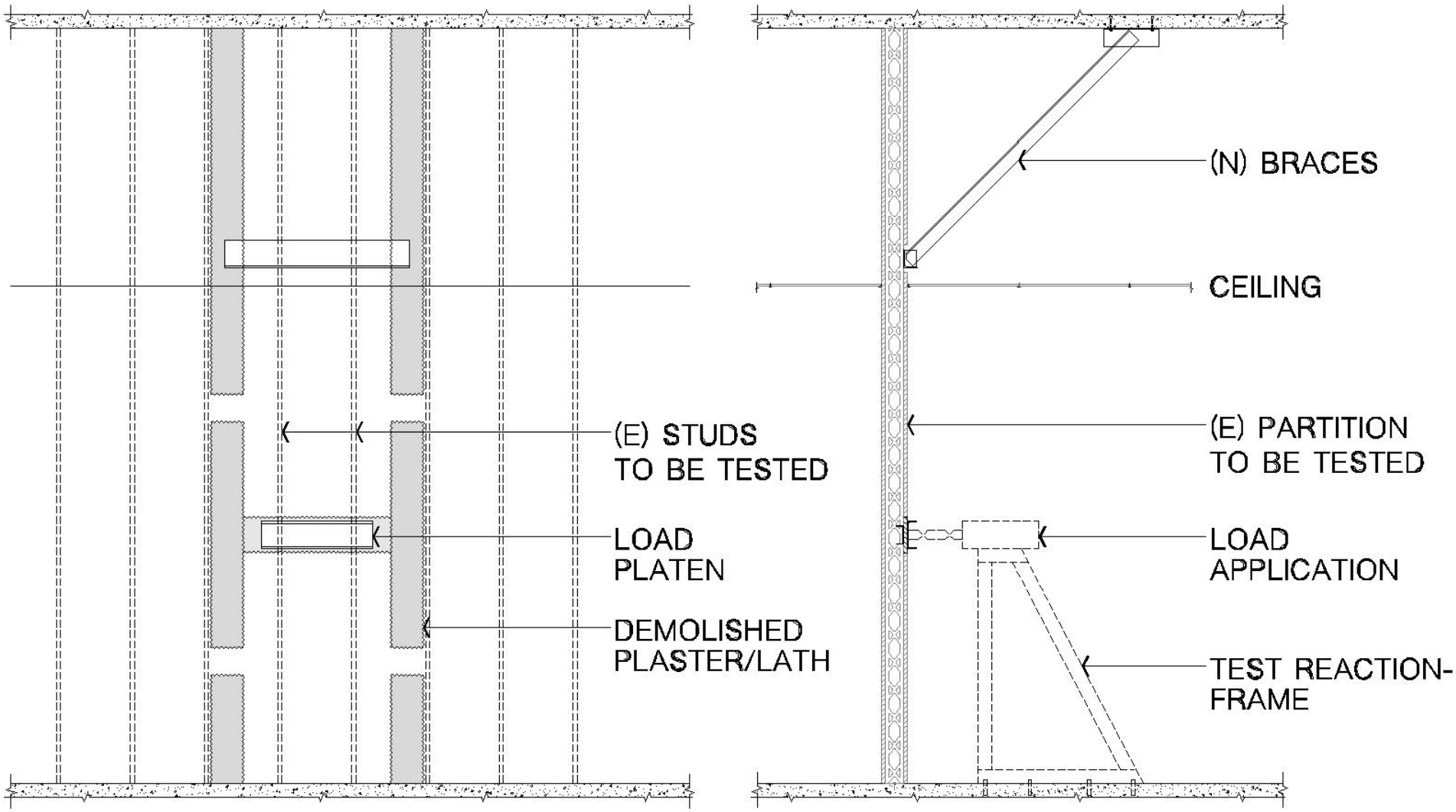

FHT ELEVATION

FHT SECTION

Full Partition Tests/ Full-Height

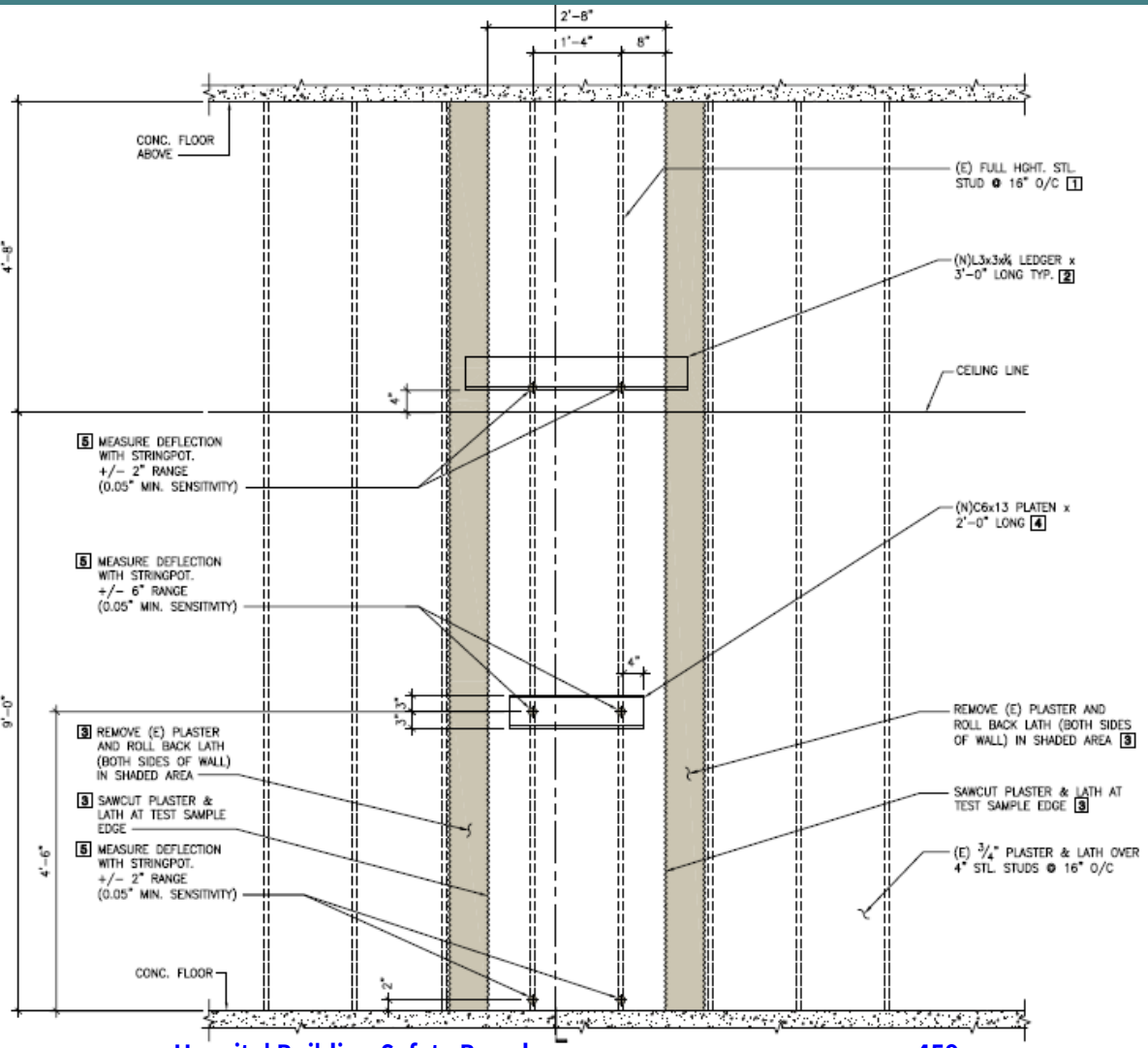

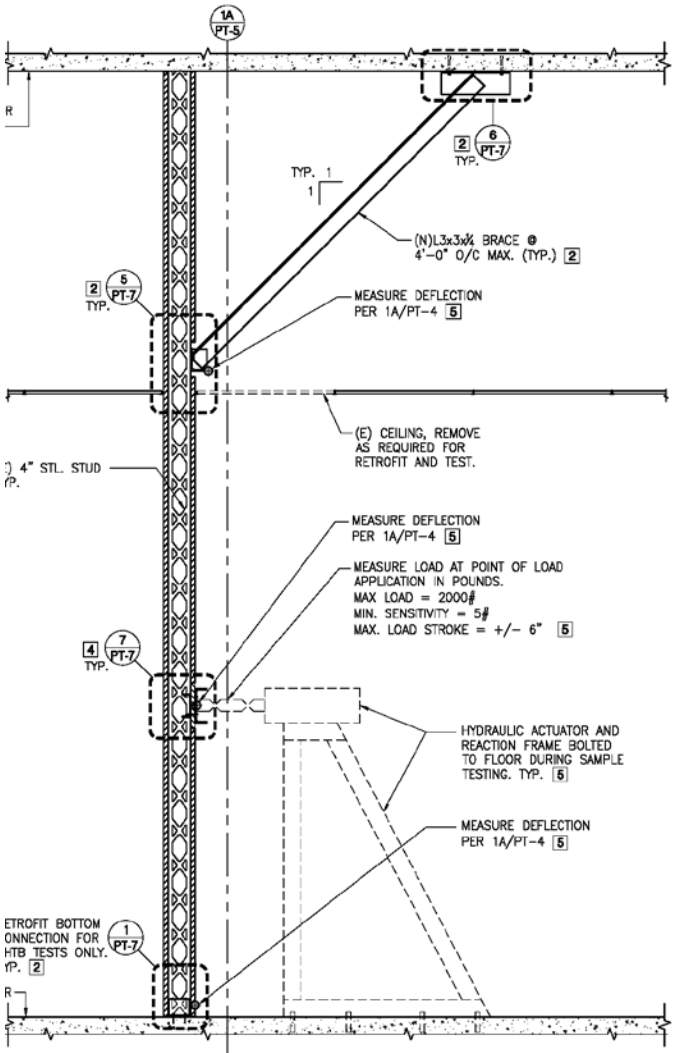

Full Partition Tests/ Full-Height

- Force and displacements digital data was collected and used to produce "Load-History" and "Load-Deflection" curves for each test for all channels (load actuator and string pots)
- Tests were recorded by photos and videos
- At the conclusion of each test, each partition sample was deconstructed to document existing conditions and failure modes

Full Partition Tests

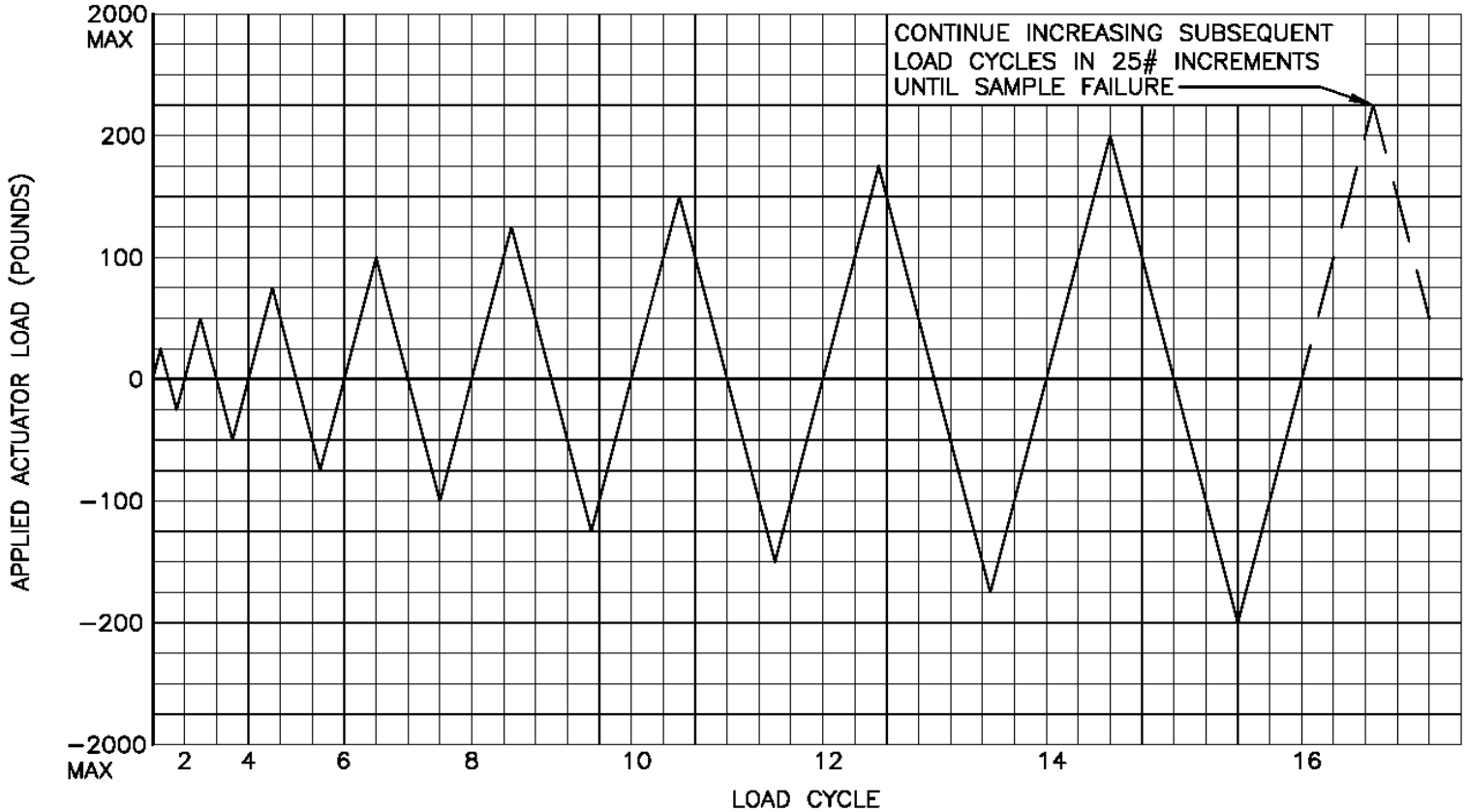

CYCLIC LOADING PROTOCOL

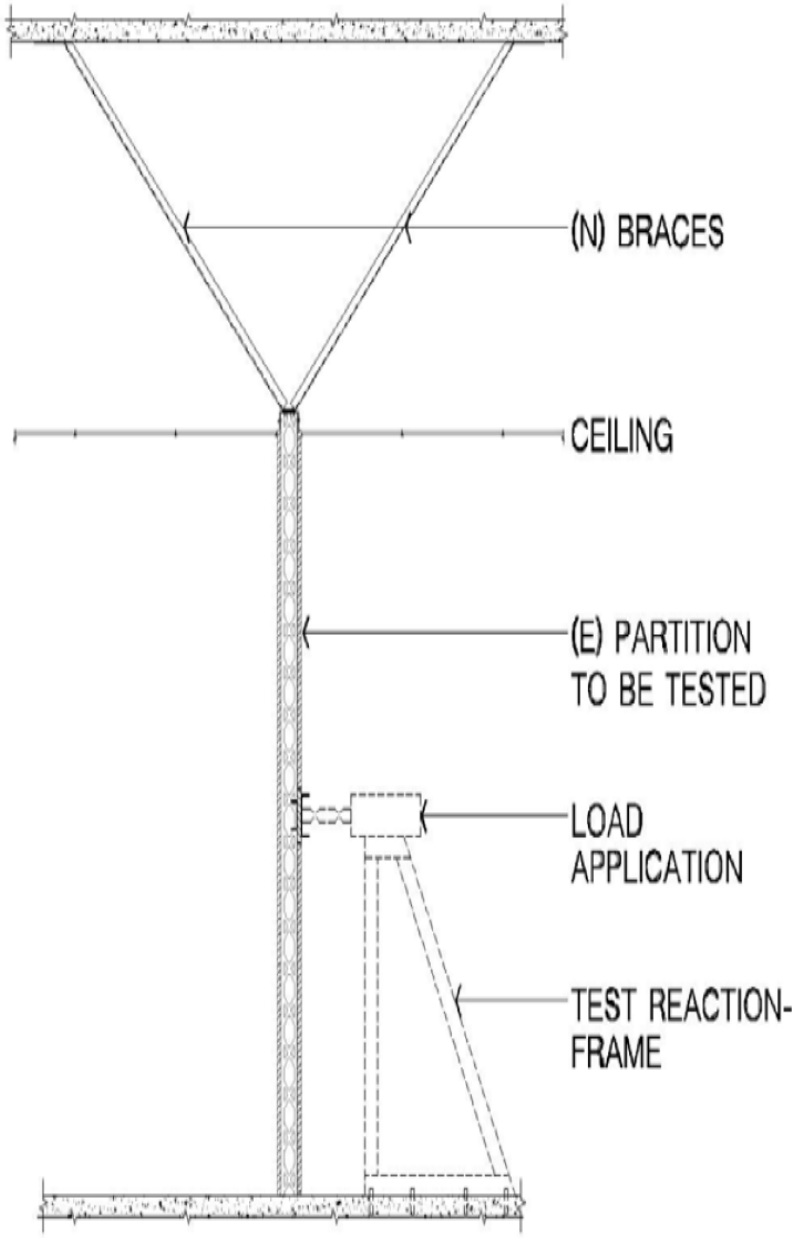
(N) BRACES
CEILING
(E) PARTITION
TO BE TESTED
LOAD
APPLICATION
TEST REACTION-
FRAME

CHT SECTION

Installation of Backing Plates

4.6"
HOWSKELL
HOWSKELL

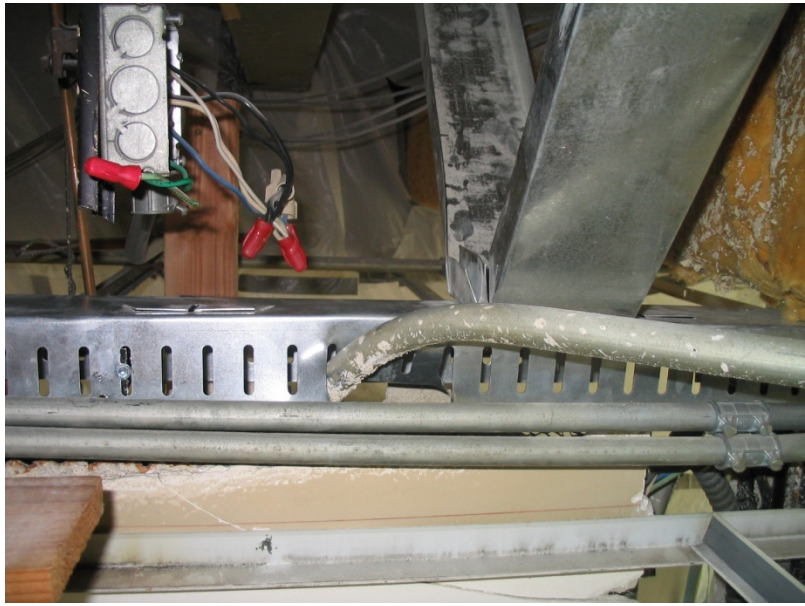

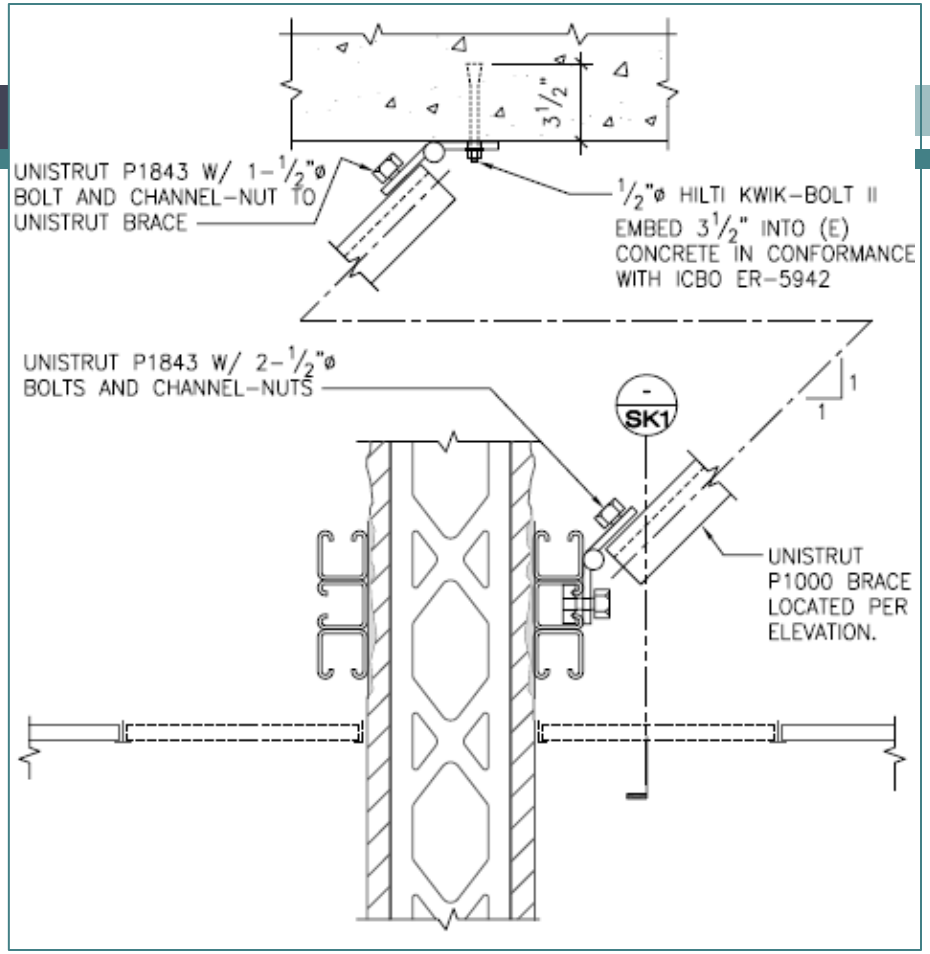
UNISTRUT P1843 W/ 1-1/2"ø BOLT AND CHANNEL-NUT TO UNISTRUT BRACE
3 1/2"
1/2"ø HILTI KWIK-BOLT II EMBED 3 1/2" INTO (E) CONCRETE IN CONFORMANCE WITH ICBO ER-5942
UNISTRUT P1843 W/ 2-1/2"ø BOLTS AND CHANNEL-NUTS
SK1
1
1
UNISTRUT P1000 BRACE LOCATED PER ELEVATION.

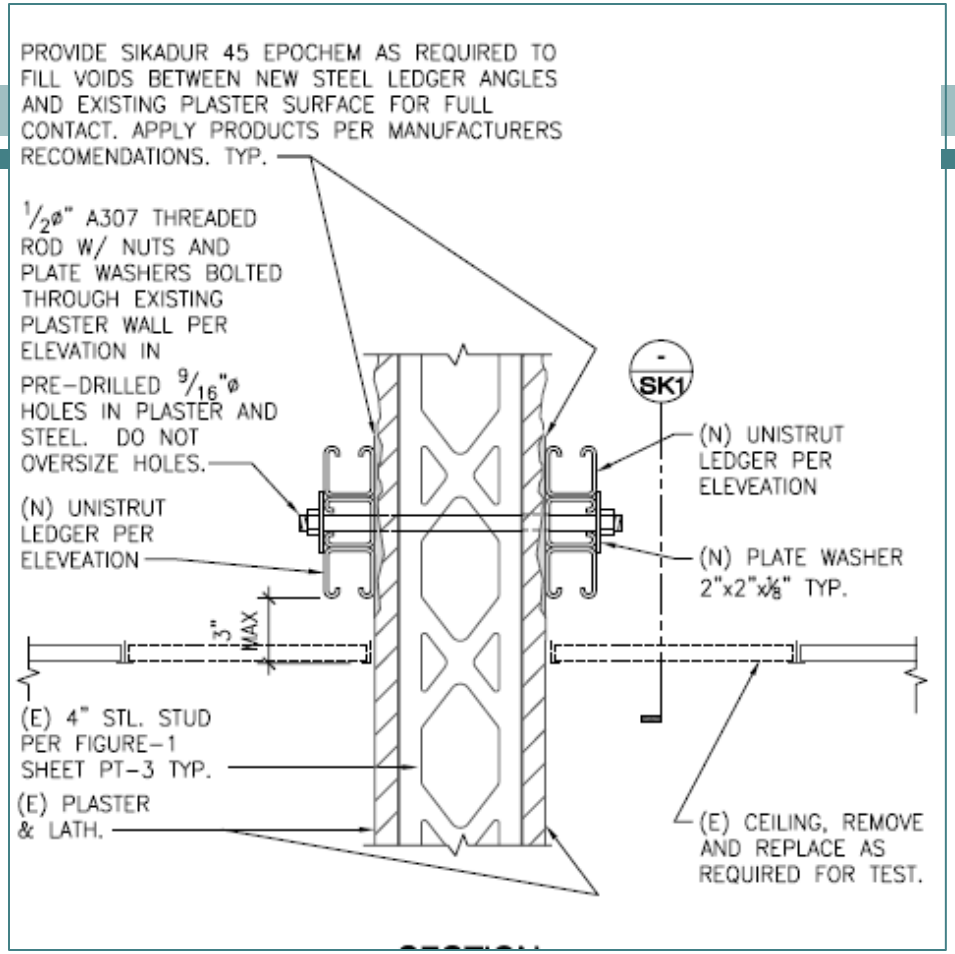
PROVIDE SIKADUR 45 EPOCHEM AS REQUIRED TO FILL VOIDS BETWEEN NEW STEEL LEDGER ANGLES AND EXISTING PLASTER SURFACE FOR FULL CONTACT. APPLY PRODUCTS PER MANUFACTURERS RECOMENDATIONS. TYP.
1/2ø" A307 THREADED ROD W/ NUTS AND PLATE WASHERS BOLTED THROUGH EXISTING PLASTER WALL PER ELEVATION IN
PRE-DRILLED 9/16"ø HOLES IN PLASTER AND STEEL. DO NOT OVERSIZE HOLES.
(N) UNISTRUT LEDGER PER ELEVEATION
SK1
(N) UNISTRUT LEDGER PER ELEVEATION
(N) PLATE WASHER 2"x2"x1/8" TYP.
3" MAX
(E) 4" STL. STUD PER FIGURE-1 SHEET PT-3 TYP.
(E) PLASTER & LATH.
(E) CEILING, REMOVE AND REPLACE AS REQUIRED FOR TEST.

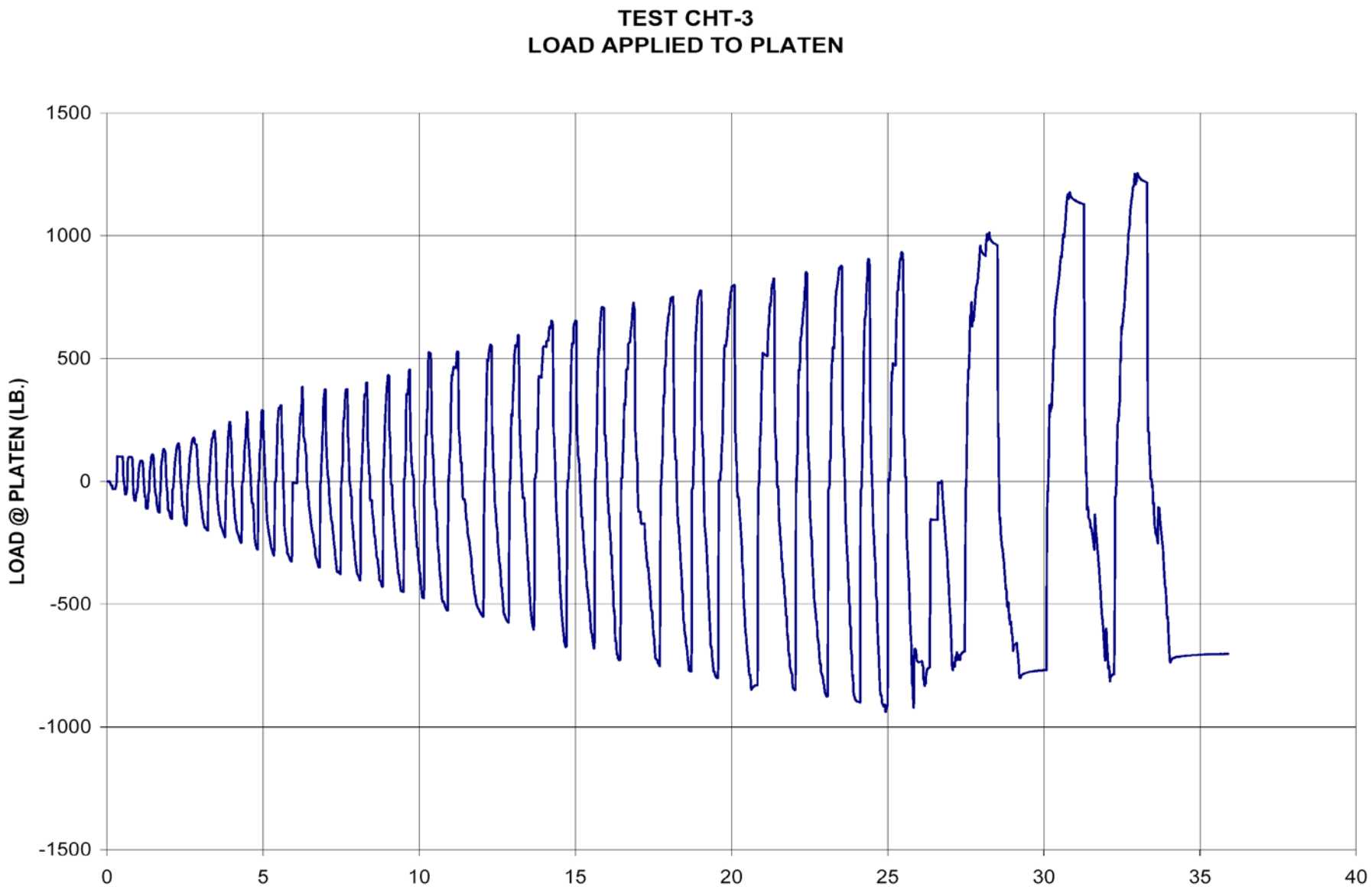

Full Partition Tests

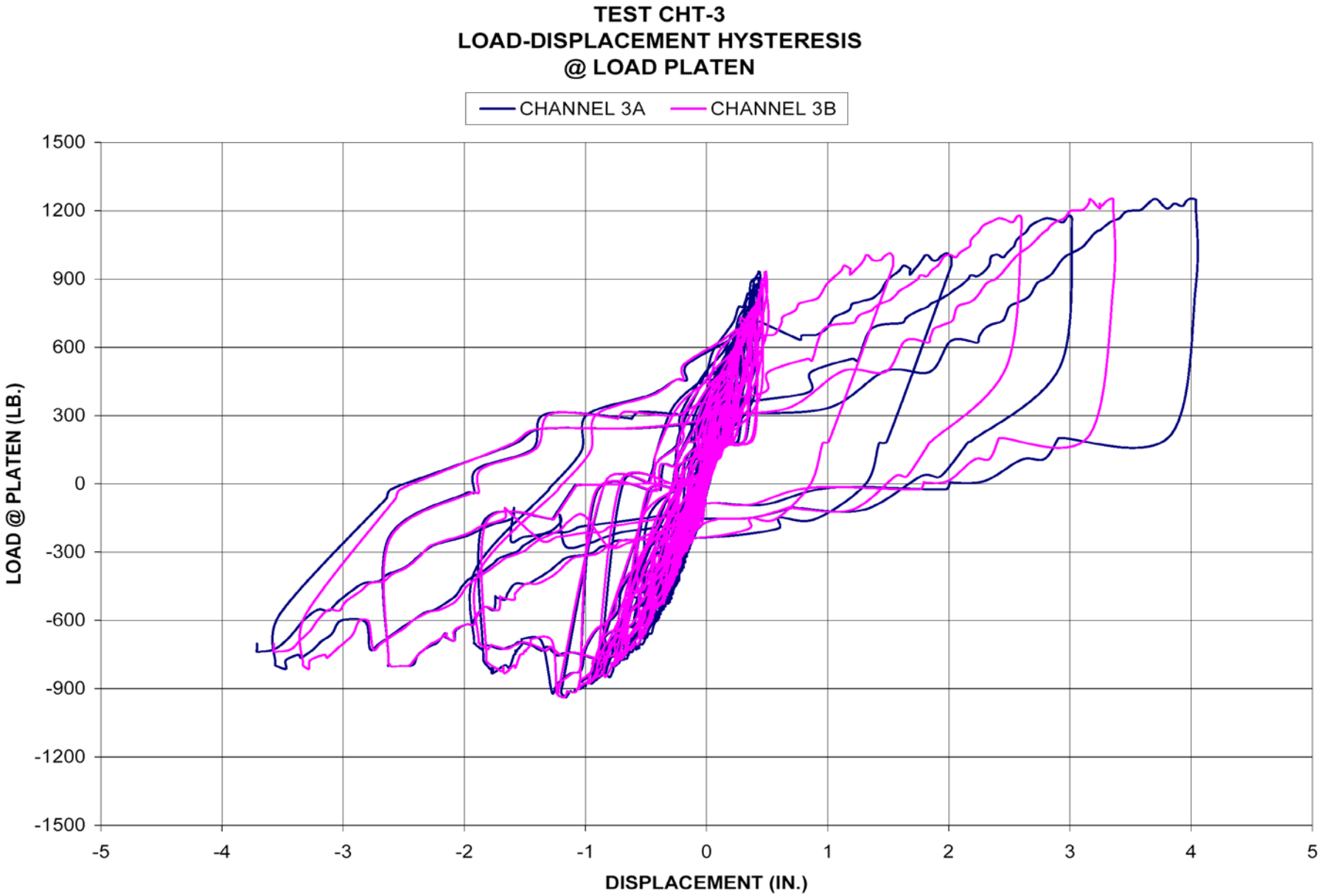

Full Partition Tests

CHT
TEST
5-10-19
12-1-03

Full Partition Tests

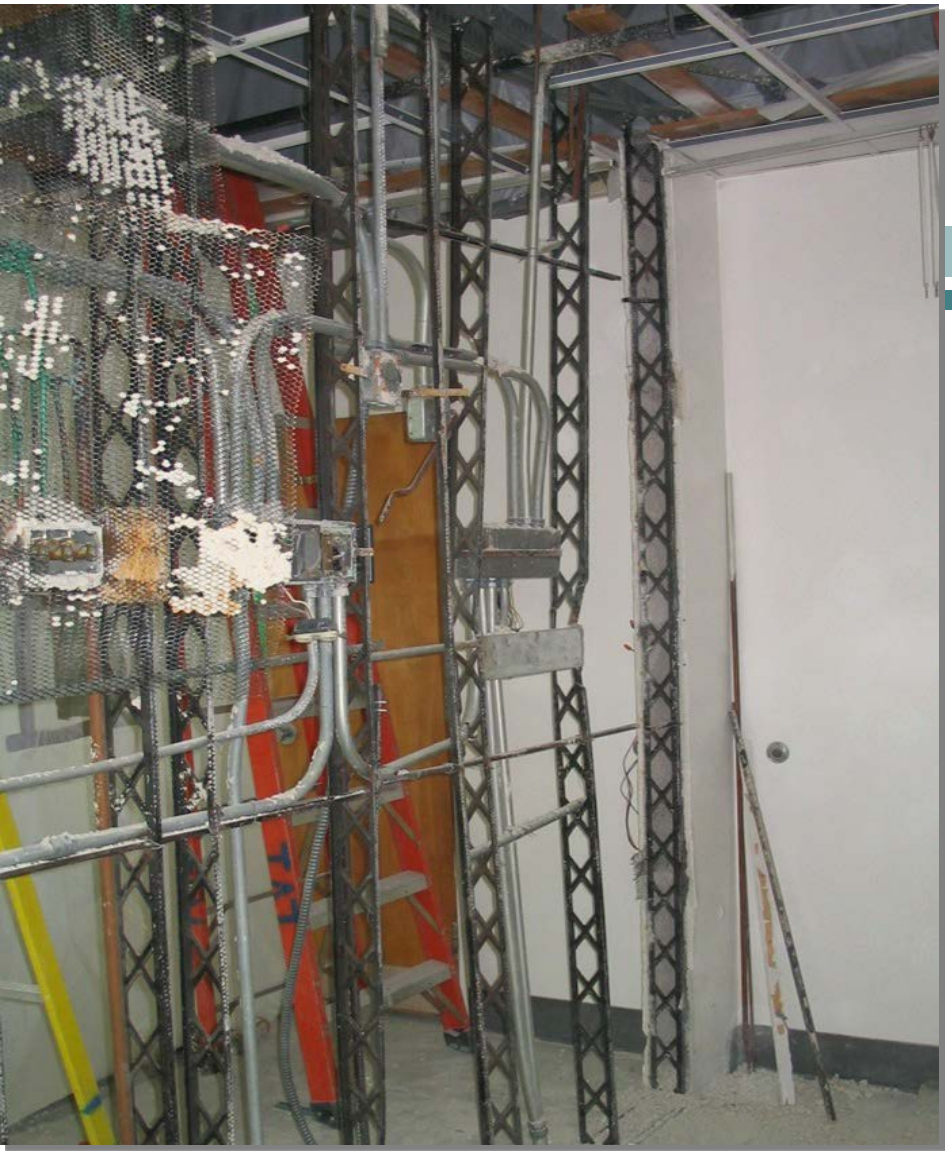

Full Partition Tests

Full Partition Tests

Test Label	Location	Backing Plate at the Point of Load Application	Top Brace to Ceiling	Comments
CHT-1	Basement Test	Welded per approved Detail 8/PT-8	Per approved Detail 3/PT-8	Tested to Failure
CHT-2	5TH Floor Test	Welded per approved Detail 8/PT-8	Per approved Detail 3/PT-8	Tested to Failure
CHT-3	7TH Floor Test No. 1	Welded per approved Detail 8/PT-8	Per approved Detail 3/PT-8	Tested to Failure
CHT-4	7TH Floor Test No. 2	Welded per approved Detail 8/PT-8	Per approved Detail 3/PT-8	Tested to Failure
CHT-5	7TH Floor Test No. 3	Screwed per proposed Detail SK-5/PT-14	Per approved Detail 3/PT-8	Plaster was damaged prior to start of CHT-5

Full Partition Tests

Test Labelti	Max. Load (lb.) (push)	Max. Load (lb.) (pull)	Average (push/pull) Load. (lb.)	Average Load Per Stud (lb.)	$D_{MAX-LOAD}$ (in.)	$D_{ULT.}$ (in.)	Comments
CHT-1	978	949	964	482	+/- 1	+/- 4.5	Tested to Failure
CHT-2	1,060	937	999	499	+/- 1	+/- 5	Tested to Failure
CHT-3	926	938	932	466	+/- 1	+/- 4	Tested to Failure
CHT-4	988	1,007	998	499	+/- 0.8	+/- 4	Tested to Failure
CHT-5	647	621	634	317	+/- 0.8	+/- 3.5	Plaster was damaged prior to start of CHT-5

Full Partition Tests

Test Label	Stud ID	Load per Stud (lb.) (Average of Push/Pull Strokes)	Mid-Point Deflection (in.) (Average of Push/Pull Strokes)	I composite (in.^{4}) (See Below)
CHT-1	Left	400	0.417	0.868
CHT-1	Right	400	0.423	0.856
CHT-2	Left	400	0.537	0.674
CHT-2	Right	400	0.574	0.631
CHT-3	Left	400	0.568	0.637
CHT-3	Right	400	0.600	0.603
CHT-4	Left	400	0.548	0.661
CHT-4	Right	400	0.600	0.603
		Average	0.533	0.692
		St. Dev.	0.073	0.108
		C.O.V.	13.8%	15.6%

Full Partition Tests

Test Label	Stud ID	Tested Capacity Per Stud (lb.)	F.S.	Design Capacity Per Stud (Mid-Point Load) (lb.)	Design Moment Capacity Per Stud (ft-lb.)
CHT-1	Left	482	1.67	289	650
CHT-1	Right	482	1.67	289	650
CHT-2	Left	499	1.67	299	673
CHT-2	Right	499	1.67	299	673
CHT-3	Left	466	1.67	279	628
CHT-3	Right	466	1.67	279	628
CHT-4	Left	499	1.67	299	673
CHT-4	Right	499	1.67	299	673
			Average	292	656
			St. Dev.	9	20
			C.O.V.	3%	3%

Full Partition Tests

Test Label	Location	Backing Plate at the Point of Load Application	Top Brace to Ceiling	Comments
FHT-1	5TH Floor Test	Welded per approved Detail 8/PT-8	Per approved Details 5/PT-8 & 6/PT-8	Tested to Failure
FHT-2	7TH Floor Test No. 1	Screwed per proposed Detail SK-5/PT-14	Bolted per proposed Details SK-1 to SK-4/PT-14	Test Stopped @ 1.5" Deflection
FHT-3	7TH Floor Test No. 2	Screwed per proposed Detail SK-5/PT-14	Bolted per proposed Details SK-1 to SK-4/PT-14	Tested to Failure

Full Partition Tests

Stud Flexural Capacity

Test Label	Stud ID	Moment Strength Per Stud (ft-lb.)
Moment Strength		586 ft-lb.

Stud Shear Capacity

Test Label	Stud ID	Shear Strength Per Stud (lb.)
Shear / Bearing Strength		557 lb.

Conclusions

- Successful testing program, saving considerable cost, schedule and impact on full-operating hospital
- Illustrates a successful collaboration between the client, A/E and OSHPD staff (Mr. Chris Tokas and Mr. Tom Hale)
- Guided similar testing programs in other facilities by other A/E teams

Technical Paper and Award Winning

ANALYTICAL AND EXPERIMENTAL SEISMIC ASSESSMENT OF EXISTING AND RETROFITTED METAL-STUD PARTITIONS

STRUCTURAL ENGINEERS ASSOCIATION OF SOUTHERN CALIFORNIA

SEAOSC
Excellence In Structural Engineering
Award Winner

Study/Research/Guidelines

Thank you

This page left intentionally blank.

OSHPD
Office of Statewide Health Planning and Development

SB 499 Update

Roy Lobo, Ph.D., S.E., Principal Structural Engineer
Hussain Bhatia, Ph.D., S.E., Supervisor Seismic Compliance Unit
Brett Beekman, S.E. District Structural Engineer
Patrick Rodgers, S.E., Senior Structural Engineer

OSHPD Briefing, HBSB

November 20, 2014

Facilities Development Division

SPC-1 Building extensions as of 11/15/2014

Extension Type	SB 90	SB 1661	SB 499	SB 306	SB 608
SB 90	**240**	12	0	6	0
SB 1661		**58**	0	0	0
SB 499			**7**	0	0
SB 306				**40**	0
SB 608					**1**
Facilities	112	15	5	9	1

Total SPC-1 Buildings =	354
Active SPC-1 building extensions beyond 2013 =	328
SPC-1 Buildings without Extensions =	26 (12 Fac.)
Hospitals with SPC-1 Buildings =	137
Hospitals with SPC-1 Building(s) and no ext. =	4

Preliminary 2014 SB 499 Reports Summary

This preliminary summary is based on data reported by the hospitals to OSHPD as required by the SB 499 reports due on November 1, 2014. The information and data used to generate this summary are subject to change without notice.

Compliance Timeline	Number of Hospitals	Number of SPC-1 Buildings
By January 1, 2015	32	94
Between January 1, 2015 to January 1, 2016	20	49
Between January 1, 2016 to January 1, 2018	25	57
Between January 1, 2018 to January 1, 2020	59	152

- The compliance timeline for SPC-1 buildings is self-reported by the hospitals and does not automatically make a hospital eligible for an extension to the compliance date reported.
- To be eligible for an extension, a hospital must meet the initial eligibility criteria and maintain its eligibility by complying with subsequent milestones and requirements.

Method of Compliance for Facilities (Preliminary) as reported from SB 499 reports to comply by Jan 1, 2015; Total = 32

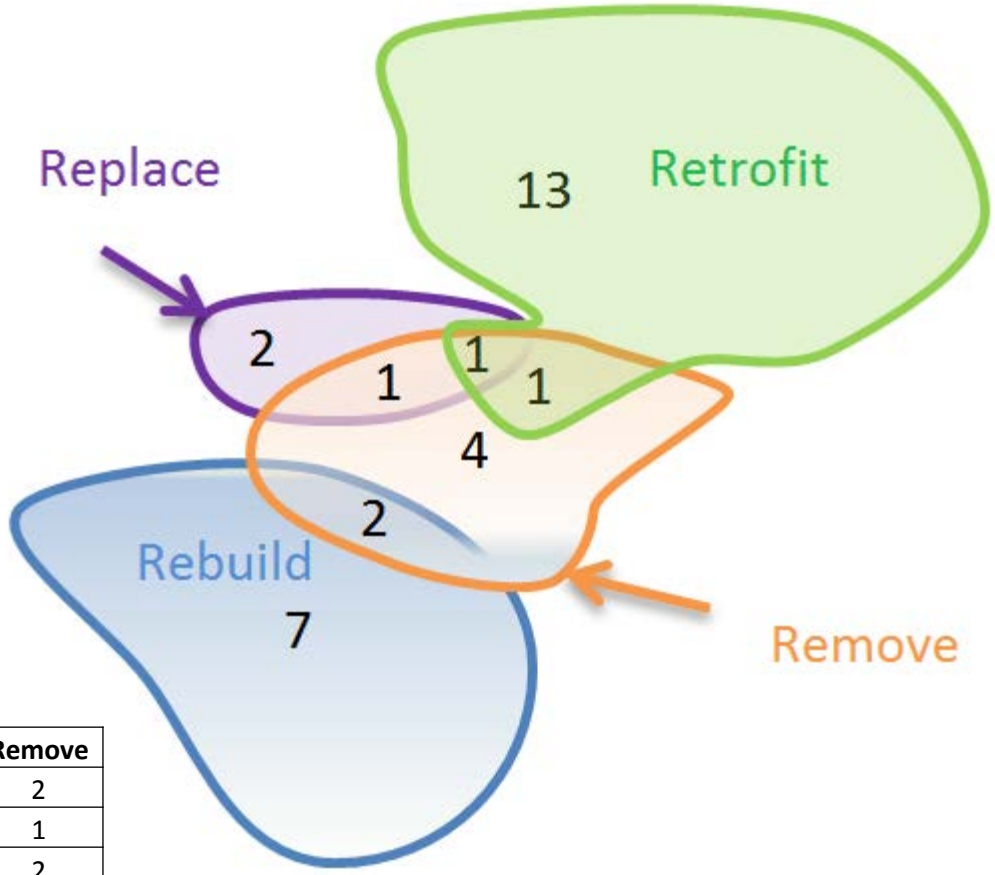

	Rebuild	Replace	Retrofit	Remove
Rebuild	9	0	0	2
Replace	0	4	1	1
Retrofit	0	1	15	2
Remove	2	1	2	9

Method of Compliance for Facilities (Preliminary) as reported from SB 499 reports to comply between 2015 & 2016 Total = 20

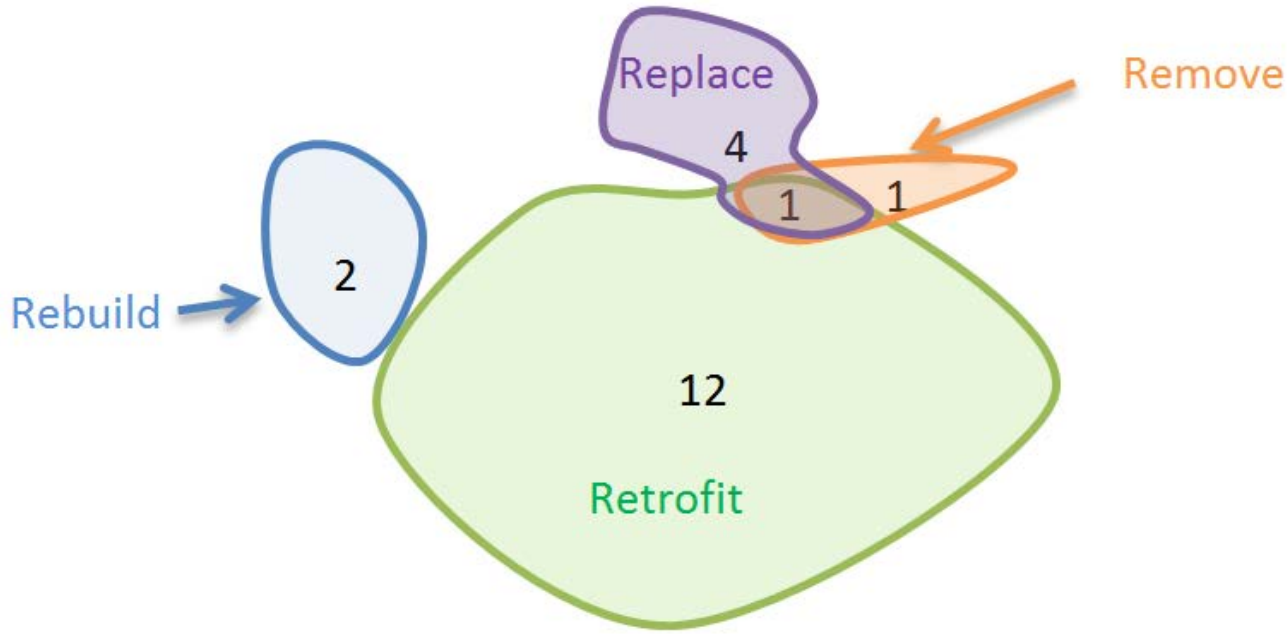

	Rebuild	Replace	Retrofit	Remove
Rebuild	2	0	0	0
Replace	0	5	1	0
Retrofit	0	1	13	1
Remove	0	0	1	2

Method of Compliance for Facilities (Preliminary) as reported from SB 499 reports to comply between 2016 & 2018; Total = 25

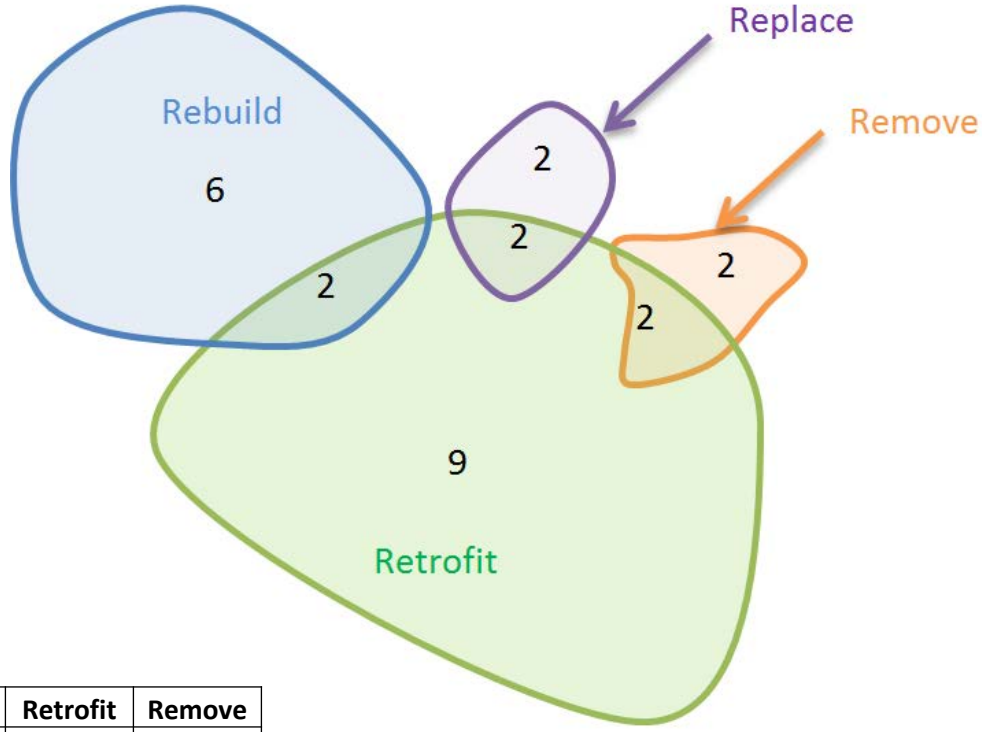

	Rebuild	Replace	Retrofit	Remove
Rebuild	8	0	2	0
Replace	0	4	2	0
Retrofit	2	2	15	2
Remove	0	0	2	4

Method of Compliance for Facilities (Preliminary) as reported from SB 499 reports to comply between 2018 & 2020; Total = 59

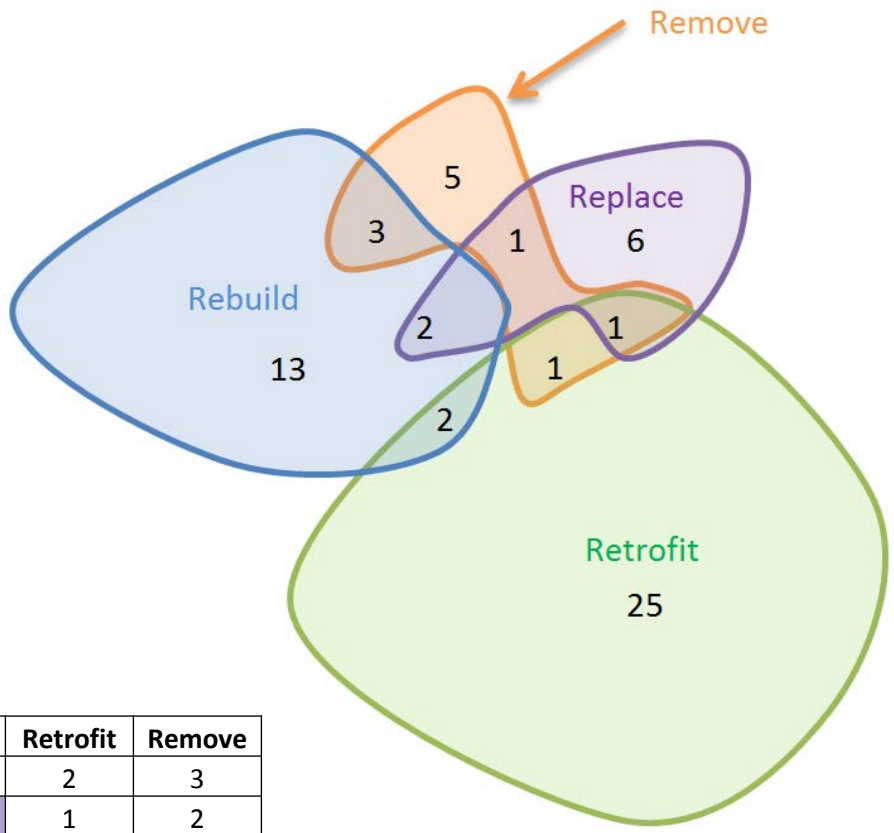

	Rebuild	Replace	Retrofit	Remove
Rebuild	20	2	2	3
Replace	2	10	1	2
Retrofit	2	1	29	2
Remove	3	2	2	11

2014 SB 499 Anticipation Completion Dates (Preliminary)

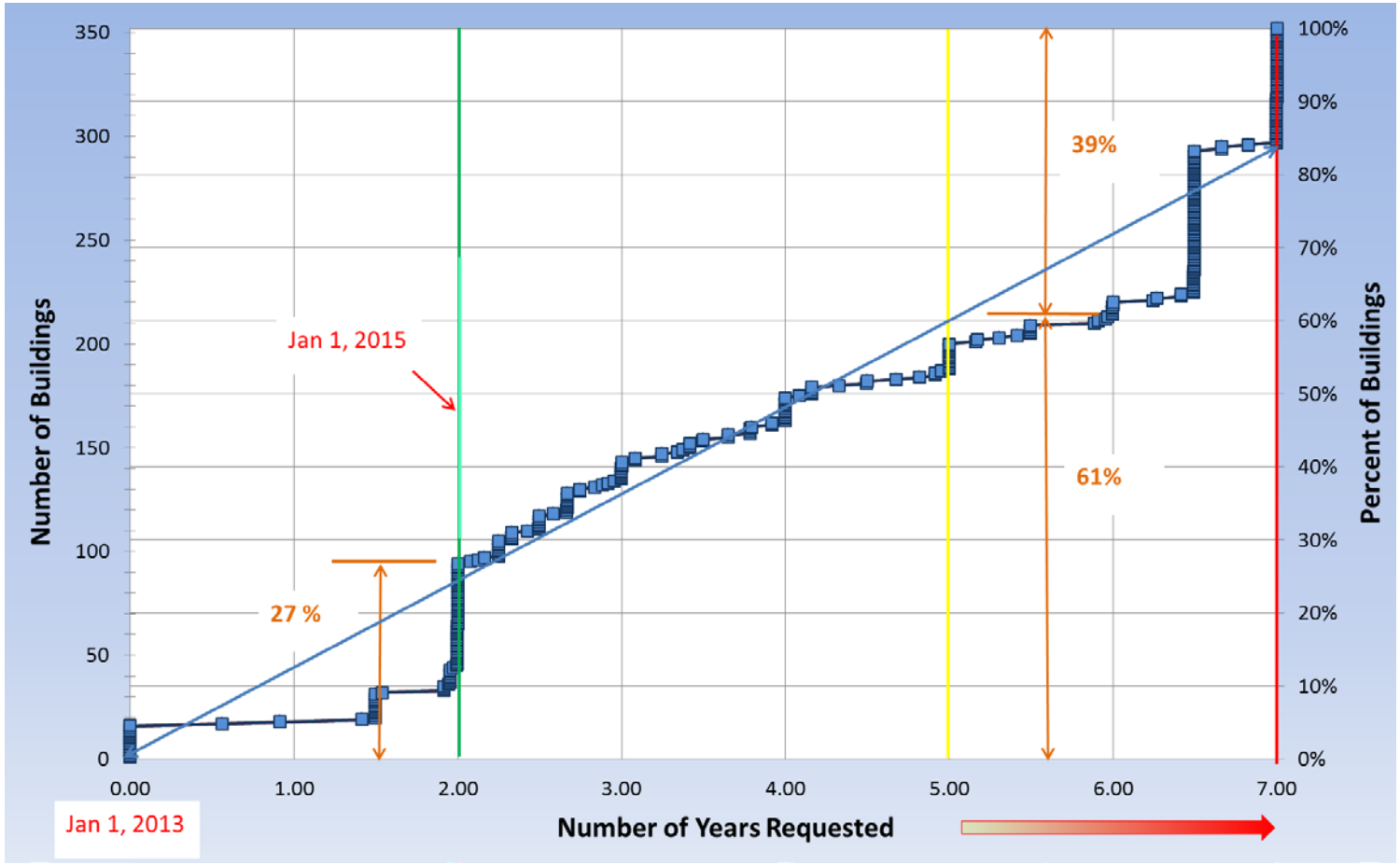

2014 SB 499 Anticipation Completion per Method of Compliance (Preliminary)

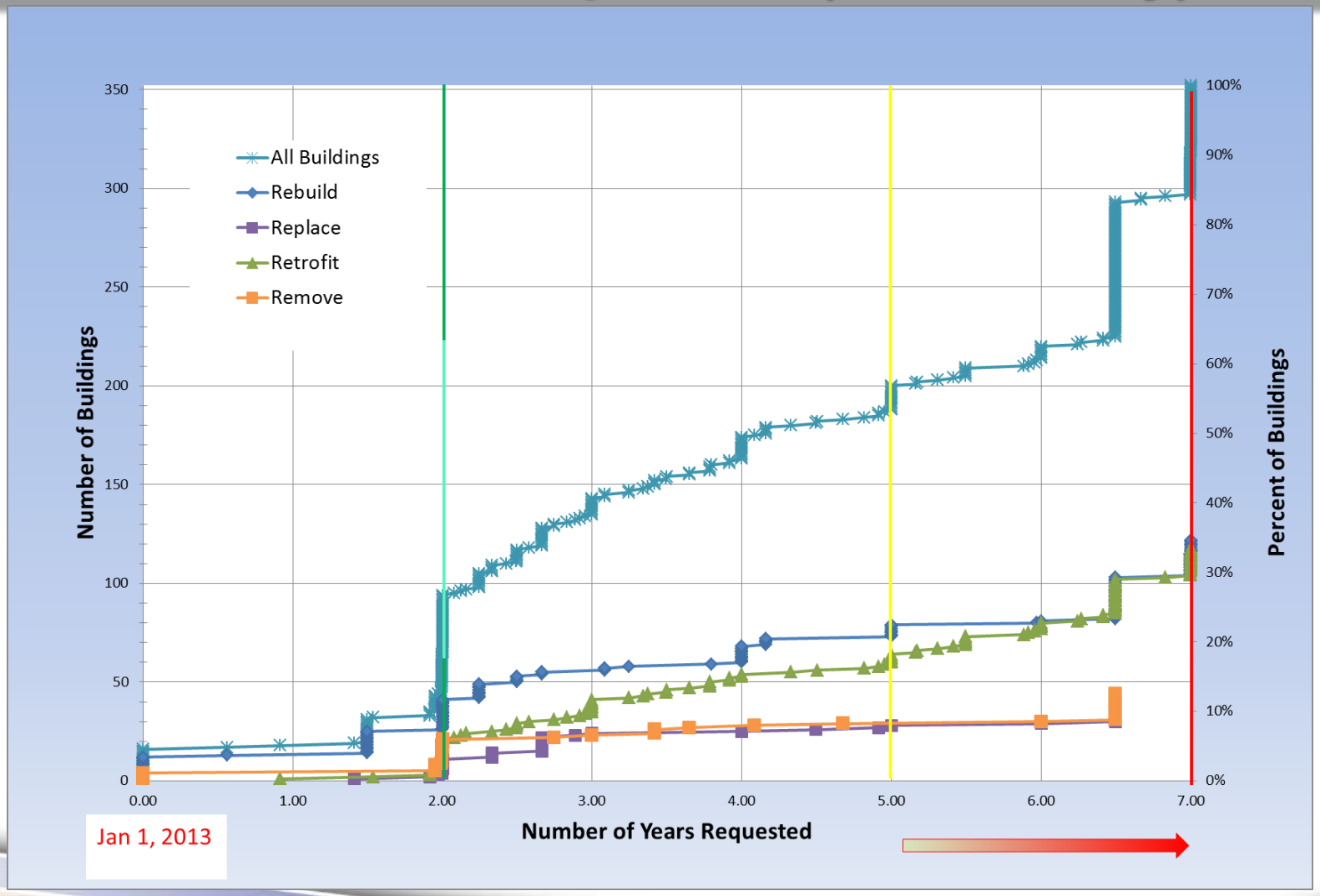

Service Beds in SPC-1 Buildings (Preliminary)

SB 499 report Method of Compliance	Service Beds, SPC-1 Buildings							Total
	Nursing	Intensive Care	Pediatric Adolescent	Psychiatric Nursing	Obstetrical Post Partum	Intermediate Care	Skilled Nursing	
Rebuild	2893	449	212	106	310	0	202	**4172**
Replace	873	87	131	22	98	0	114	**1325**
Retrofit	4710	497	181	390	437	0	604	**6819**
Remove	700	45	0	130	31	0	207	**1113**
Total	**9176**	**1078**	**524**	**648**	**876**	**0**	**1127**	**13429**
% Beds	**45.3%**	**23.6%**	**32.4%**	**51.7%**	**37.0%**	**0.0%**	**63.4%**	**41.8%**

SB 499 report, Compliance Timeline	Service Beds, SPC-1 Buildings							Total
	Nursing	Intensive Care	Pediatric Adolescent	Psychiatric Nursing	Obstetrical Post Partum	Intermediate Care	Skilled Nursing	
<= 2 yrs	1624	205	113	132	214	0	293	**2581**
2 - 5 yrs	2684	345	105	101	213	0	246	**3694**
5 - 7 yrs	4868	528	306	415	449	0	588	**7154**
Total	9176	1078	524	648	876	0	1127	**13429**

2014 SB 499 Anticipation Completion Dates (Preliminary)

SB 499 report Method of Compliance	No. of SPC-1 Buildings, (All Buildings)				
	SB 499 Anticipated Completion Dates				
	2015	2016	2018	2020	Total
Rebuild	**41**	**14**	**24**	**43**	122
Replace	**11**	**13**	**4**	**19**	47
Retrofit	**21**	**20**	**23**	**54**	118
Remove	**21**	**2**	**6**	**36**	65
Total	**94**	**49**	**57**	**152**	**352**

SB 499 report Method of Compliance	Facilities w/SPC-1 Buildings (All Buildings)				
	SB 499 Anticipated Completion Dates				
	2015	2016	2018	2020	Total
Rebuild	**10**	**2**	**7**	**20**	39
Replace	**6**	**4**	**4**	**10**	24
Retrofit	**15**	**15**	**16**	**29**	75
Remove	**12**	**2**	**4**	**11**	29
Total	**43**	**23**	**31**	**70**	**167**

2014 SB 499 Anticipation Compliance per Chain (Preliminary)

Chain	<= 2 yrs	2- 5 yrs	>5 - 7 Yrs	Total
Adventist	0	10	0	10
Dignity	12	2	10	24
Kaiser	33	0	0	33
Los Angeles County	0	1	15	16
Prime Healthcare	5	3	0	8
Providence	1	1	4	6
St. Joseph's	1	1	10	12
Sutter	5	11	17	33
UC	0	1	1	2
Unaffiliated	28	42	66	136
Other Chains	9	34	29	72
	94	**106**	**152**	**352**

2014 SB 499 Anticipation Compliance per Chain (Preliminary)

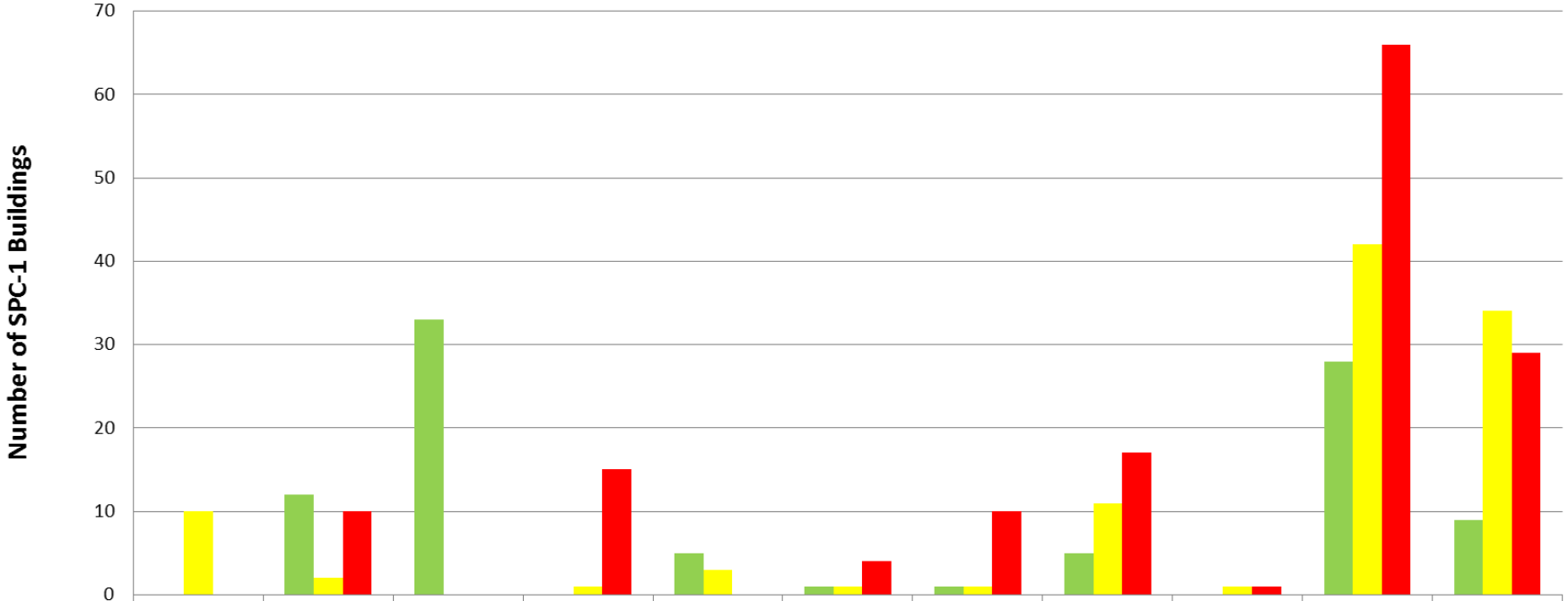

	Adventist	Dignity	Kaiser	Los Angeles County	Prime Healthcare	Providence	St. Joseph's	Sutter	UC	Unaffiliated	Other Chains
<= 2 yrs	0	12	33	0	5	1	1	5	0	28	9
2- 5 yrs	10	2	0	1	3	1	1	11	1	42	34
>5 - 7 Yrs	0	10	0	15	0	4	10	17	1	66	29

Compliance Method per Chain (Preliminary)

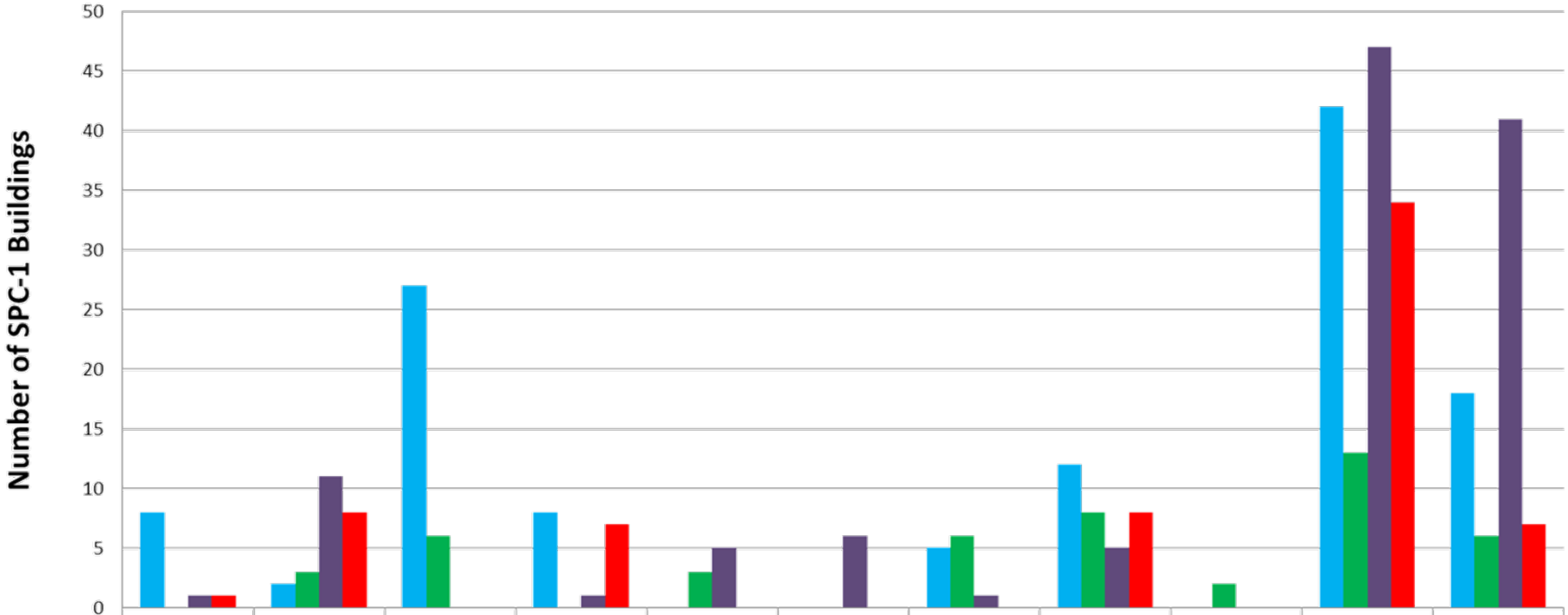

	Adventist	Dignity	Kaiser	Los Angeles County	Prime Healthcare	Providence	St. Joseph's	Sutter	UC	Unaffiliated	Other Chains
Rebuild	8	2	27	8	0	0	5	12	0	42	18
Replace	0	3	6	0	3	0	6	8	2	13	6
Retrofit	1	11	0	1	5	6	1	5	0	47	41
Remove	1	8	0	7	0	0	0	8	0	34	7

SB 499 Report Summary Sheet (Preliminary)

Summary Sheet

Facno	10468	Contact name:	Kenneth McFarland
Facility	Mission Hospital Laguna Beach	Contact Phone:	(949) 364-1400
City	Laguna Beach	Contact Email:	Kenneth.McFarland@stjoe.org
		Date Updated	
		By	
		General Comments:	

	Reported	HID	Difference
Total_Unit_Beds	207	207	0
Unit_Med_Surg_Beds	103	132	29
Unit_Perinatal_beds	19	0	-19
Unit_Pediatric_Beds	0	0	0
Unit_ICU_Beds	10	10	0
Unit_Coronary_Beds	0	0	0
Unit_AcuteResp_Beds	0	0	0
Unit_Burn_Beds	0	0	0
Unit_ICUNeoNtal Beds	0	0	0
Unit_Rehab_Beds	0	0	0
Unit_Chemical_Beds	10	0	-10
Unit_AcutePsych_beds	36	36	0
Unit_SNF_Beds	29	29	0
Unit_InterCare_Beds	0	0	0
Unit_InterCareDD_Beds	0	0	0
Total	207	207	0

SPC-1 Building data

BuildingNumber	BLD-02434		Total Beds per Unit	179
BuildingName	Nursing Tower		Total Beds per Serv	179
FinalSPCRating	SPC2	(SB 90 App.)		
BuildingResolution	Retrofit	Retrofit		
AnticipatedCompletionDate	01-Jan-16		Building Specific Comments:	
Project_Status	Yes-Submitted			
Extension_Date	01/01/2020	6.49 Yrs Rqst		
SB_306_Extension_date				
HAZUS Year	2010			
SB_499_HAZUS_Fail				
SB_90	Yes			
ProjCompletDate				
CEQAReview	False			
OtherDescription				
ProjNum	HL110794-0			
SubNum	Yes			
FromFacNo	10468			
Scope	SB 1661: VSI IMPROVEMENT OF THE NURSING TOWER			
STATUS	Pending Field Operations			
PLN_APPR_LTR	8/20/2013			
BP_Granted	10/28/2013			
CONST_START	11/4/2013			
Percentage_Done	52			
FIELD_ACCEPTED				

Page 1 of 3

SB 499 Report Summary Sheet Cont.. (Preliminary)

ProjNum	HL110794-0
SB 1661 Project	Yes
FromFacNo	10468
Scope	SB 1661: VSI IMPROVEMENT OF THE NURSING TOWER
STATUS	Pending Field Operations
PLN_APPR_LTR	8/20/2013
BP_Granted	10/28/2013
CONST_START	11/4/2013
Percentage_Done	52
FIELD_ACCEPTED	

ProjNum	IL080650-0
SB 1661 Project	Yes
FromFacNo	10468
Scope	SB 1661: SPC-2 SEISMIC UPGRADE OF SCMC CAMPUS
STATUS	Closed
PLN_APPR_LTR	
BP_Granted	
CONST_START	
Percentage_Done	
FIELD_ACCEPTED	

Services Building BLD-02434

SB499	SB90
Nursing	Nursing
IntensiveCare	IntensiveCare
PsychiatricNursing	PsychiatricNursing
ObstetricalPostprtum	ObstetricalPostprtum
SkilledNursing	SkilledNursing
SupportServices	SupportServices
RenalDialysis	RenalDialysis

SB 499 Report Summary Sheet Cont.. (Preliminary)

ProjNum	
SB 1661 Project	
FromFacNo	
Scope	
STATUS	
PLN_APPR_LTR	
BP_Granted	
CONST_START	
Percentage_Done	
FIELD_ACCEPTED	

Services Building BLD-02441

SB499	SB90
Nursing	
SkilledNursing	
Surgical	Surgical
Anesthesia	
ClinicalLab	ClinicalLab
Emergency	
RadiologicalImaging	RadiologicalImaging
NuclearMedicine	
Pharmaceutical	
RehabilitationTherapy	
Dietetic	
	Administration
OutpatientSurgery	
SupportServices	SupportServices
CentralPlant	CentralPlant

Total Services Data

LICENSE_NO		
CountOfLICENSE_NO		
FacNo	10475	
SubmissionDate	27-Oct-14	
Facility	West Anaheim Medical Center	
City	Anaheim	
TotalBedsPerUnit	219	Total beds per service should be total beds per Unit
TotalBedsPerService	219	
NursingInpatientBeds	147	
IntensiveCareInpatientBeds	20	
PediatricAdolescentInpatientBeds	0	
PsychiatricNursingInpatientBeds	30	
ObstetricalPostprtumInpatientBeds	0	
IntermediateCareInpatientBeds	0	
SkilledNursingInpatientBeds	22	219 Should = Total_Unit_Beds in Reported Column on p
Nursing	2	
IntensiveCare	1	

Differences between 2014 SB 499 Online reports and SB 90 Data (Preliminary)

Method of Compliance for SPC-1 Building

	SB 90	SB 499 Online Report				
SB 90		Rebuild	Replace	Retrofit	Remove	% Difference
Rebuild	**71**	47	16	2	6	33.8%
Replace	**23**	2	13	1	7	43.5%
Retrofit	**111**	5	2	98	6	11.7%
Remove	**22**	0	1	2	19	13.6%
Total	**227**	**54**	**32**	**103**	**38**	
% Difference Overall		23.9%	39.1%	7.2%	72.7%	

Anticipated Completion Dates for SPC-1 Building

	SB 90	SB 499 Online Report			%
SB 90		< 2 years	2 - 5 years	5 - 7 years	Difference
< 2 Years	**75**	37	24	14	50.7%
2 - 5 years	**39**	5	30	4	23.1%
5 - 7 years	**123**	2	17	104	15.4%
Total	**237**	**44**	**71**	**122**	
% Difference Overall		41.3%	82.1%	0.8%	

Service Comparison, SB 499 vs SB 90

Buildings with Service Discrepancies = 214

Buildings with all Services Matching = 138

Buildings with Projects from 2014 SB 499 Reports (Preliminary)

	SB 90	Projects	SB 499	Projects
Rebuild	**71**	56	**122**	115
Replace	**23**	16	**47**	29
Retrofit	**111**	37	**118**	77
Remove	**22**	16	**65**	34
	227	125	352	255

This page left intentionally blank.

OSHPD PROPOSED CODE CHANGES FOR THE 2016 CALIFORNIA MECHANICAL & PLUMBING CODES

September 2014

David Castillo
Senior Mechanical Engineer
Building Standards Unit
Facilities Development Division

2016 PROPOSED CODE CHANGES

2013 CMC

TABLE 325.0
HEATING, COOLING, AND RELATIVE HUMIDITY REQUIREMENTS FOR SENSITIVE AREAS OR ROOMS

Area or Rooms Designation	TEMPERATURE RANGE[1, 2] °F	RELATIVE HUMIDITY[1, 3] Percent
Operating room	*68-75*	*20-60*
Cystoscopy	*68-75*	*20-60*
Cardiac catheterization lab	*70-75*	*max 60*
Trauma/cardiac room	*70-75*	*20-60*
Delivery room, Caesarean operating room	*68-75*	*20-60*
Gastrointestinal endoscopy procedure room	*68-73*	*20-60*
Post-Anesthesia Care Unit	*70-75*	*30-60*
Newborn nursery	*72-78*	*30-60*
Newborn Intensive-care nursery unit	*70-75*	*30-60*
Intensive care[4]	*70-75*	*30-60*
Burn Unit	*70-75*	*40-60*

2016 CMC

TABLE 325.0
HEATING, COOLING, AND RELATIVE HUMIDITY REQUIREMENTS FOR SENSITIVE AREAS OR ROOMS

Area or Rooms Designation	TEMPERATURE RANGE[1, 2] °F	RELATIVE HUMIDITY[1, 3] Percent
Operating room	*68-75*	*20-60*
Cystoscopy	*68-75*	*20-60*
Cardiac catheterization lab	*70-75*	*max 60*
Trauma/cardiac room	*70-75*	*20-60*
Delivery room, Caesarean operating room	*68-75*	*20-60*
Gastrointestinal endoscopy procedure room	*68-73*	*20-60*
Post-Anesthesia Care Unit	*70-75*	*20 ~~30~~-60*
Newborn nursery	*72-78*	*30-60*
Newborn Intensive-care nursery unit	*72 ~~70-75~~ 78*	*30-60*
Intensive care[4]	*70-75*	*30-60*
Burn Unit	*70-75*	*40-60*

2016 PROPOSED CODE CHANGES

2013 CMC

326.0 Essential Mechanical Provisions. [OSHPD 1, 2, 3 (Surgical Clinics only) & 4] During periods of power outages essential electrical power shall be provided for the following equipment:

…

326.6 Alarms for airborne infection isolation rooms and protective environment rooms.

2016 CMC

326.0 Essential Mechanical Provisions. [OSHPD 1, 2, 3 (Surgical Clinics only) & 4] During periods of power outages essential electrical power shall be provided for the following equipment:

…

326.6 Alarms for airborne infection isolation rooms and protective environment rooms.

326.7 All cooling systems serving the Technology Equipment Center and Technology Distribution Room.

2016 PROPOSED CODE CHANGES

2013 CMC

407.4.1.1 Air supplied to operating rooms, cesarean operating rooms, cardiac catheterization labs, cystoscopy rooms, delivery rooms, and nurseries shall be delivered at or near the ceiling of the area served. In theses areas and in morgues and autopsy rooms all air removed from the area shall be removed near floor level. Exhaust or recirculation inlets shall be located not less than 3 inches (76 mm) nor more than 8 inches (203 mm) above the finished floor, except in morgues and autopsy rooms where all of the exhaust air is removed through an autopsy table designed for this purpose. At least two exhaust or recirculation air inlets shall be used in all cardiac catheterization labs, cystoscopy rooms, operating rooms, and delivery rooms and shall be located not less than 3 inches (76 mm) nor more than 8 inches (203 mm) above the finished floor.

2016 CMC

407.4.1.1 Air supplied to operating rooms, cesarean operating rooms, cardiac catheterization labs, cystoscopy rooms, delivery rooms, and nurseries shall be delivered at or near the ceiling of the area served. In theses areas and in morgues and autopsy rooms all air removed from the area shall be removed near floor level. Exhaust or recirculation inlets shall be located not less than 3 inches (76 mm) nor more than 8 inches (203 mm) above the finished floor, except in morgues and autopsy rooms where all of the exhaust air is removed through an autopsy table designed for this purpose. At least two exhaust or recirculation air inlets of equal capacity shall be used in all cardiac catheterization labs, cystoscopy rooms, operating rooms, and delivery rooms and shall be located not less than 3 inches (76 mm) nor more than 8 inches (203 mm) above the finished floor.

2016 PROPOSED CODE CHANGES
2013 CMC Table 4A

Newborn/well baby nursery	*P*	*6*	*2*	*6*	—
Post anesthesia care unit	*NR*	*6*	*2*	*6*	*Yes*

2016 PROPOSED CODE CHANGES
2016 CMC Table 4A

Newborn/well baby nursery	*P*	*6*	*2*	*6*	—
~~*Post anesthesia care unit*~~ *Anesthesia service space*	*NR*	*6*	*2*	*6*	*Yes*

2016 PROPOSED CODE CHANGES
2013 CPC Table 4-2

Nurses' station	*1*					
Medication dispensing	*1*					
Home training room	*1*					

2016 PROPOSED CODE CHANGES
2016 CPC Table 4-2

Nurses' station	*1*					
~~*Medication dispensing*~~ *Medicine preparation room*	*1*					
Home training room	*1*					

2016 PROPOSED CODE CHANGES
2013 CPC Table 4-2

Postanesthesia care units (PACU)						*1*
Open plan	*1:4 gurney spaces*[33]					
Individual rooms	*1*[33]					

2016 PROPOSED CODE CHANGES
2016 CPC Table 4-2

~~*Postanesthesia care units (PACU)*~~ *Anesthesia service space*						*1*
Open plan	*1:4 gurney spaces*[33]					
Individual rooms	*1*[33]					

2016 PROPOSED CODE CHANGES

2013 CPC

605.3.3.2 [Not permitted for OSHPD 1, 2, 3, & 4] Pressed Fittings. Pressed fittings for copper pipe or tubing shall have an elastomeric O-ring that forms the joint. The pipe or tubing shall be fully inserted into the fitting, and the pipe or tubing marked at the shoulder of the fitting. Pipe or tubing shall be cut square, chamfered, and reamed to full inside diameter. The fitting alignment shall be checked against the mark on the pipe or tubing to ensure the pipe or tubing is inserted into the fitting. The joint shall be pressed using the tool recommended by the manufacturer.

2016 CPC

605.3.3.2 ~~[Not permitted for OSHPD 1, 2, 3, & 4]~~ Pressed Fittings. Pressed fittings for copper pipe or tubing shall have an elastomeric O-ring that forms the joint. The pipe or tubing shall be fully inserted into the fitting, and the pipe or tubing marked at the shoulder of the fitting. Pipe or tubing shall be cut square, chamfered, and reamed to full inside diameter. The fitting alignment shall be checked against the mark on the pipe or tubing to ensure the pipe or tubing is inserted into the fitting. The joint shall be pressed using the tool recommended by the manufacturer.

BUILDING STANDARDS UNIT 11/19/2014

Regulations / Rulemakings

- Preliminary proposed code changes presented to HBSB Committee - Administrative Processes & Code Changes
- BSC Coordinating council met for 10/14/2014 main topic of discussion was state agency adoption of the 2015 International Existing Building Code vis a vis CBC Chapters 34 and 34A

Public Outreach

Populated SNF Web Page with "How To Guides"

- Guide #1 - Wall-Mounted TV/Monitor Bracket Installation
- Guide #2 - Water Heater Replacement
- Guide #3 - Wall-Mounted Handrail Replacement

Participated in CCDIC meeting 09/25/2014

- Introduced Connie Christensen as the primary OSHPD SNF contact person
- Covered New OSHPD SNF Page content

Presented at CVCAIA 08/28/2014 focused on:

- PIN 57 Functional Program

Presented 2 OSHPD Training Sessions at Underwriters Laboratories, 09/17/14 San Jose, CA.

- OSHPD 3 Primary care clinics

Presented at HBSB Hot Topics Seminar 10/14

Quality Assurance

Participated in various client project meetings, client/L&C meetings to coordinate and resolve various alternate methods of compliance/program flexibility requests. Conducted Architectural QA reviews in both Sac and LA offices. Conducted Mechanical QA reviews in both Sac and LA offices. Conducted Electrical QA reviews in both Sac and LA offices. Provided technical opinions on various Comment and Process Review (CPR) issues.

Tech Staff Meetings

Mechanical technical staff training was conducted focused on:

- Training on Fire Sprinklers
  - Day 3–Wednesday, July 30, 2014
  - Final Session Day 4 – Wednesday, October 15, 2014

An Architectural technical staff meeting was held 10/23-24/14

SOPs, PINs and CANs updated as of 11/19/14

SOPs

- SOP No. 14 - 02 Managing Project Records August 20, 2014

CANs

- CAN 2-11B Accessibility in Health Facilities 09/09/2014
- CAN 5-310.9 (Formerly CAN 5-311.9 Updated 11/06/14

PINs

- PIN 58 Approved Testing Agency/Laboratory for Structural Tests Effective 07/20/2014
- PIN 59 SB 90 Financial Capacity Reports Effective 07/09/2014
- PIN 60 Temporary Wireless Nurse Call System Effective 08/07/2014

Code revision priorities for this cycle:

1) Add “Change of Function” language to Chapter 34A and other items as appropriate from the Remodel CAN

2) Repeal SNF requirements, if any, that exceed model code as they would exceed statutory authority in HFSSA § 129875

3) Develop building standards for free standing Acute Psychiatric Hospitals, using the Guidelines as a basis, and having small focus group meetings with L&C for their input and acceptance where needed or appropriate (does Department of Mental Health need to play a role in this?)

4) Address proposed code amendments submitted by Dialysis Clinic Association, especially use of other plumbing materials for dialysis and even other areas of hospitals where infection control is an issue

5) Revise code to allow CPVC and ABS in all OSHPD categories

6) Revise code to allow plenum return air in certain clinics and specific areas of hospitals, such as administration, storage, etc.

7) Revise coed to allow the use of flexible duct in certain clinics and specific areas of hospitals, such as administration, storage, etc.

8) Revise nurse call requirements for SNFs

9) Revise CAC to cover reopening of closed projects

10) Determine whether any changes should be made regarding testing and recertification of IORs

11) Add reopening of closed projects to CAC

oshpd Office of Statewide Health Planning and Development

Hospital Building Safety Board
400 R Street, Suite 200
Sacramento, California 95811-6213
(916) 440-8453
Fax (916) 324-9118
http://www.oshpd.ca.gov/Boards/HBSB/index.html

MEETING REPORT
HOSPITAL BUILDING SAFETY BOARD (HBSB)

Wednesday, November 19, 2014
1:00 p.m. – 4:00 p.m.

and

Thursday, November 20, 2014
10:00 a.m. – 4:00 p.m.

Red Lion Hotel
500 Leisure Lane
Sacramento, CA 95815
(916) 922-2020

Board Members
John Egan, Chair
Arlee Monson, Vice-Chair
John Donelan
Enid Eck
Rami Elhassan
Michael Foulkes
Henry Huang
Bert Hurlbut
Eric Johnson
Scott Karpinen
Bruce Macpherson
Trailer Martin
Arlee Monson
Simin Naaseh
Michael Nearman
Michael O'Connor
Carl Scheuerman
Brian Spindler
Patrick Sullivan
Richard Tannahill
Jennifer Thornburg

OSHPD Staff
Robert David, OSHPD Director
Paul Coleman, FDD Deputy Director
Hussain Bhatia
Gary Dunger
Glenn Gall
Roy Lobo
Chris Tokas
Geoff Trautman
Elizabeth Wied

HBSB Staff
Linda Janssen, Executive Director
Cathy Kane
Kathi Zamora, FDD

"Access to Safe, Quality Healthcare Environments that Meet California's Diverse and Dynamic Needs"

DAY ONE

1. Call to Order – John Egan, HBSB Chairperson

HBSB Board Chair John Egan called the meeting to order.

Welcome and Introductions

The Board members and audience introduced themselves.

Review and approve the draft March 12, 2014 HBSB Meeting Report

Mr. Egan summarized the events of the last quarterly meeting in March.

- Mr. David had given an OSHPD update, spoken about trends and changes in California health care, and reviewed the effects of the improving state fiscal situation on hospital building funds.
- The Board Procedures Committee held a meeting in December conducted by Mr. Foulkes.
- The Education and Outreach Committee held a meeting in January conducted by Mr. Monson.
- The Administrative Processes and Code Changes Committee held a meeting conducted by Mr. Karpinen.
- The Standard Details Committee held a meeting conducted by Mr. Hurlbut.
- The Advanced Technology Committee held its first meeting, conducted by Mr. Johnson.
- Mr. Coleman had spoken about FDD workload and activities.
- Mr. Lobo had given an update on SB 90 and SB 499 retrofitting.

DRAFT

- Mr. Gall had spoken about changes to code.

Mr. Hurlbut noted a typo on page 4, line 11: *SBC2* should read *SPC2*.

MOTION: (M/S/C/) [Scheuerman/Monson]

The Board voted unanimously to approve the March 12, 2014 HBSB meeting report with the amendment above.

2. OSHPD Update – Robert P. David, OSHPD Director

- Mr. David shared the goals of the OSHPD 2013-15 Strategic Plan.
- OSHPD is part of the new California Health and Human Services Open Data Portal which encourages health care transparency.
- Mr. David reviewed some significant California hospital issues:
    - Insurance coverage expansion has meant that 3-4 million are newly insured since the implementation of the Affordable Care Act (ACA).
    - Blue Cross has a new health plan product in Southern California called Vivity in which competing hospitals are partners.
    - The Daughters of Charity Health System has a tentative sale agreement.
- The Legislature is dealing with the problem of the increased demand for adequate primary care network access. They expanded the Song-Brown workforce program into additional primary care specialties.
- Mr. David thanked Mr. Coleman and the FDD team for their response to the Napa earthquake.

DRAFT

- The Legislature reconvenes in January with two new leaders: Kevin DeLeon as Senate Pro Tem and Tony Atkins as Speaker. Their priorities remain to be seen.

Swearing-in ceremony for new HBSB members

Patrick Sullivan joins HBSB as a Public Member. He has over 20 years' experience in public relations and governmental public affairs.

Richard Tannahill joins HBSB representing the architectural sector. He has 23 years of experience in California as a licensed architect.

Mr. David swore in the new Board members.

Recognition of outgoing HBSB Vice-Chair, Arlee Monson

Mr. David honored and thanked Mr. Monson, who is retiring.

Recognition of outgoing HBSB Chair, John Egan

Mr. David read a resolution honoring Mr. Egan's service as HBSB Chairperson. He will continue as a Board member until next April.

Mr. Egan thanked all those with whom he has worked at HBSB.

3. Nominations for HBSB Chair and Vice-Chair Kick Off – Michael Foulkes

Review of process for HBSB Chair and Vice-Chair nominations

DRAFT

Mr. Foulkes reviewed the nominations process, noting that usually the Chair and Vice-Chair are not leaving office simultaneously.

Nominations Committee presents proposed Slate of Officers

Mr. Foulkes stated that the nominations are open until votes are taken on Thursday.

He submitted the recommendations of himself and Mr. Martin: for Chair of the Board, Mr. Karpinen; for Vice-Chair, Mr. Elhassan.

Committee Accepts Nominations from the Floor

Mr. Egan opened the floor to other nominations; there were none.

4. Education and Outreach Committee Report – Arlee Monson, Chair

Overview and approval of Meeting Reports:

- **May 1, 2014**
- **June 18, 2014**
- **August 13, 2014**
- **September 10, 2014**

Mr. Monson stated that the primary topic of the meetings had been seminars.

At the May 1 meeting the committee had discussed the "Tips from the Experts" seminar, which was held on May 30 to a full house. The committee had also discussed the fall "All You Need to Know" seminar, which focused more on the OSHPD programs, as well as design issues and plan review. In addition, the committee had considered CMS's

potential adoption of the new Life Safety Code changes, and the new Technology Committee.

At the June 18 meeting the committee had discussed the feedback from the seminar, the new “Hot Topics” seminar (which was to include the topics of Functional Program, Non-Materially Alter, Standard Details, OPDs and OSPs, the OPL and OPM program, and eSP New Features), and OSHPD developing processes. The committee had also talked about other education opportunities such as a webinar on the submittal requirements.

The August 13 meeting had involved the Hot Topics seminar preparations. The committee had added the component of live demonstrations to the seminar. They had also talked about other seminar topics, the Technology Committee meetings, and the idea of Skilled Nursing Facilities as a workshop.

At the September 10 meeting the committee had continued to prepare for the seminar with the presenters and staff.

Overview of October 9, 2014 “Hot Topics” seminar in Anaheim and October 30, 2014 “Hot Topics” seminar in Concord

Mr. Monson summarized the October seminars. The venues were full with attendance around 140. The audience profile differed between the two: in Anaheim there were more IORs and designers, while in Concord there seemed to be more hospital

administrators. Mr. Monson stressed that having a dialogue with people in the industry and in health care brings positive results for the Board and the public.

MOTION: (M/S/C/) [Monson/Huang]

The Board voted unanimously to approve the May 1, June 18, August 13, and September 10 Education and Outreach Committee meeting reports.

5. Standard Details Committee Report – Bert Hurlbut, Chair

Overview and approval of Meeting Reports:

- **May 15, 2014**

Mr. Hurlbut reported that the primary topic of the May 15 meeting had been Fire and Life Safety Details. The committee had discussed stuff and seal details for different configurations of a rated partition coming to a rated structure with the interface in between. The committee had been able to get a series of 15-20 details approved; the benefit will be far fewer Engineering Judgments during construction.

MOTION: (M/S/C/) [Hurlbut/Donelan]

The Board voted unanimously to approve the May 15, 2014 Standard Details Committee meeting report.

6. Administrative Processes and Code Changes Committee – Scott Karpinen, Chair

Overview and approval of Meeting Reports:

- **June 26, 2014**

- **September 23, 2014**

Mr. Karpinen reported that at the June 26 meeting the three main topics had been the Policy Intent Notice (PIN) for testing laboratories (structural tests only); the standard operating procedure and reporting form for Inspector of Record (IOR) performance observation; and the financial capacity PIN to provide direction to hospitals for SB 1950 relief.

MOTION: (M/S/C/) [/Karpinen/Monson]
The Board voted unanimously to approve the June 26 Administrative Processes and Code Changes Committee meeting report.

At the September 23 meeting, the two main topics had been a presentation from the American Society of Heating, Refrigerating and Air Conditioning Engineers (ASHRAE) on ASHRAE Standard 170 regarding ventilation rates for health care facilities; and the 2016 code amendments.

Mr. Donelan noted necessary changes to two numbers on page 5. They should read *1224* on line 15 and *1224.4* on line 16.

MOTION: (M/S/C/) [Karpinen/Hurlbut]
The Board voted unanimously to approve the September 23 Administrative Processes and Code Changes Committee meeting report with the changes noted above.

DRAFT

7. Instrumentation Committee – Lou Gilpin, Chair

Overview and approval of Meeting Report:

- **October 29, 2014**

Ms. Naaseh reported in place of Mr. Gilpin. She explained the Seismic Instrumentation Program, which provides for seismic certification of certain hospital buildings through an interagency agreement between OSHPD and the California Geological Survey Seismic Instrumentation Program. The program is for hospital buildings that have unique structural systems or that have gone through Alternate Means of Compliance processes. When these buildings are instrumented, information can be harvested after earthquakes to be used in emergency response as well as future engineering analysis and design.

The committee's role is to advise OSHPD on candidate hospitals for the future instrumentation list.

At the October 29 meeting there had been a review of the status of the program by OSHPD's Roy Lobo and Chris Tokas, and an annual report given by Moe Huang and Tony Shakal. The committee had also discussed a seismic map showing the location of instrumented hospitals in California, and they had reprioritized the running list of hospitals that are good candidates for instrumentation.

Discussion and Public Input

DRAFT

Mr. Karpinen asked about maintenance of the sensors in the hospitals. Ms. Naaseh replied that they must be maintained; that is part of what the California Strong Motion Instrumentation Program (CSMIP) does.

Mr. O'Connor asked if Queen of the Valley Hospital was instrumented; Mr. Tokas answered that it was not, because it was not located in an area of probable earthquakes.

Mr. Hurlbut asked how many instruments can be found in an individual hospital. Ms. Naaseh replied that some have over 20 – it depends on the size of the hospital.

8. Special Presentation on Zero Energy Buildings – Bruce Macpherson

Mr. Macpherson presented information he had obtained on Zero Energy Buildings (ZEBs).

Definition

- The definition of a ZEB is that the total amount of energy used by the building is roughly equal to the amount of renewable energy created on the site, on an annual basis – a building with zero net energy consumption.
- The building is tied in to the energy grid, because the energy created on-site is non-constant.
- ZEBs also encompass the idea of exemplary building design to minimize energy requirements.

DRAFT

How to Obtain a Zero-Energy Building

- The list of energy sources is long and includes passive solar energy, thermal mass, natural light, solar orientation, geothermal, high-efficiency HVAC systems, high efficiency windows, natural ventilation, solar water heating, skylights, LED lighting, efficient appliances, and so on.

Obtaining Zero Energy Status

- There are two components to ZEBs:
    1. Harvesting natural, renewable energy provided at the site (wind, solar, geothermal).
    2. Conserving energy (superinsulation, efficient mechanical systems, etc.).
- There must be a balance between the two. The cost of using energy harvesting systems can be prohibitive without using conservation measures. Also, occupant behavior is crucial to obtaining ZEB status.

Initiatives for ZEBs

- In the United States, buildings are responsible for almost 50% of greenhouse gases. With carbon emissions related to climate change, there is a new focus on ZEBs that is unrelated to the cost of energy.
- The California Public Utilities Commission has established California Zero Net Energy Goals; Mr. Macpherson listed them.
- The American Institute of Architects (AIA) has developed the AIA 2030 Commitment to increase carbon reduction goals, in order to achieve a carbon-

DRAFT

neutral building environment by 2030. Nationally to date, more large firms than small firms are participating.

Zero Energy Buildings and Health Care

- Health care buildings account for 8% of U.S. carbon dioxide emissions. Hospitals represent 11% of all commercial energy consumption. In hospitals, HVAC systems account for 48% of energy consumption.
- Kaiser Permanente is moving the bar toward ZEB – they conducted a small hospital building competition to achieve near-zero impact on the environment.
- The Fort Irwin replacement hospital (Department of Defense) in the Mojave Desert is built to be the first net zero carbon control hospital in the country.
- In 2009, the U.S. Department of Energy launched the Hospital Energy Alliance (HEA) as part of its net zero commercial building initiative. The main goal of the HEA is to promote the use of clean energy in hospitals and health care facilities.
- High-efficiency HVAC systems and lighting systems will have the greatest impact on energy reduction.
- Mr. Macpherson stated that available techniques and technologies can move us towards ZEBs in health care. He felt that it is only a matter of time.

Discussion and Public Input

Mr. Coleman asked about information on the cost of ZEBs over current design and construction of buildings. Mr. Macpherson stated that costs are difficult to quantify; the clients' construction budgets may not tie in to their operating budgets.

Mr. Gall spoke of the major reduction in energy usage at Kaiser San Diego's replacement facility coming from fans. He also said that there is no baseline to compare a ZEB with a minimum code standard building, which typically costs much more in the long run. Mr. Macpherson stated that the design and construction industry was going to have to take the lead in coming to regulators to discuss the intent of code as they explain what they want to do. He added that staff at OSHPD will have the technical knowledge that local agencies may not.

Mr. Huang had heard photovoltaic contractors talking about the average lifespan of photovoltaic systems being 15 years, with deterioration beginning on Day One.

Mr. Egan likened the solar industry to the PC industry: it is changing very rapidly. Mr. Macpherson commented that there have been a number of state incentives to offset the cost of photovoltaic systems in certain areas, in order to jumpstart their integration. With time, the systems are becoming more and more efficient.

An Interested Party asked about information on patient satisfaction in receiving care in a ZEB; that could be a motivator for a hospital being built with those features. Mr. Macpherson replied that patient satisfaction appears to increase with access to daylight, and studies show that daylight promotes the healing process. At present the primary motivation for the interest in ZEBs is climate change.

DRAFT

The Interested Party asked about any initiatives for energy star ratings for major hospital equipment companies. Mr. Macpherson responded that if there is demand, the manufacturers will respond.

Mr. Nearman stated that much headway is being made with the California Energy Commission regarding Zero Net Energy (ZNE) buildings and other proposals. Legislative bills in the works are addressing all of the topics Mr. Macpherson had talked about. Mr. Nearman added that there are many voluntary measures in the Green Code pertaining to hospital construction.

Mr. Johnson mentioned an upcoming February seminar presented by the Technology Committee that will cover many of these topics, as well as the Internet of Things (IOT) (which is machine to machine communication).

Considering scale, Mr. O'Connor ascertained with Mr. Macpherson that the 2.5 factor between a commercial building and a hospital does take into account the hospital's 24/7 operation.

Mr. Sullivan noted that OSHPD may have an opportunity to work with the Energy Commission to direct energy efficiency program funding towards hospital building ZEB research and development.

DRAFT

Mr. Nearman mentioned the concern about the lack of history for ZNE buildings. Once these buildings are in place and operating, it will be a couple of years before we can see if they are meeting their intended goals.

Mr. Macpherson said that even if the absolute goals of ZNE are not met, the bar is raised. The importance of these concepts to the community and the nation are becoming accepted by the public.

Mr. Nearman said that the Division of the State Architect (DSA) is developing a ZNE program for public schools and community colleges.

Mr. Johnson reported on the Technology Committee's meeting two days previous (they had dropped "Advanced" from their name.) They were given a presentation on the microgrid by Peter Spadia and Dave Bliss. The committee's upcoming workshop on February 11 will focus on quantifying three areas: building systems, clinical, and design review.

DAY TWO

9. Call to Order – John Egan, HBSB Chairperson

Mr. Egan reconvened the meeting.

Welcome and Introductions

The attendees introduced themselves once again.

10. Report on OSHPD's Response to the Napa Earthquake – Chris Tokas

Mr. Tokas gave a presentation for the Board.

- The 6.0 magnitude earthquake was located in the American Canyon on the West Napa Fault, which had not been active.
- Mr. Tokas explained the seismic activity on a geologic map. The fault ruptured north for about 10 miles.
- Unfortunately, when the probabilistic map for the Bay Area was put together in 2008, it did not consider the formation of the faults in the American Canyon area.
- Mr. Tokas made note of the "perfect" sine wave, and also noted that the event lasted for a short duration: only 2 seconds.
- The only hospital in the near vicinity to the epicenter was Queen of the Valley.
- There were 65 aftershocks within 24 hours.
- The fault rupture did surface (shown in a photograph of rows of grapevines).
- Mr. Tokas discussed damage to the transportation system and the electric power grid. Emergency generators at surrounding hospitals functioned properly.
- The airport tower was unusable so the airport was closed down.
- AT&T users had no phone communications due to damage to the AT&T building.
- Mr. Tokas discussed damage to unreinforced masonry (URM) buildings that had been retrofitted.
- Damage to non-structural components and systems was extensive.
- Mr. Tokas discussed failures of ceilings and cripple walls, and hazards to unbraced mobile homes because of vulnerable gas lines. Problems seen at Northridge and other recent earthquakes were repeated at Napa.

DRAFT

- Queen of the Valley treated 280 patients in the first 24 hours. The hospital went immediately into full emergency operation mode, setting up triage tents at the entrance to the hospital.
- At the peak time of 4:08 a.m., OSHPD had 13 people in the Emergency Operations Rooms. Twenty-two staff were out in the field.
- Seven minutes from the event, OSHPD had a fully operational shake map.
- Two different stations showed the peak ground acceleration to be 45%G versus 65%G. Mr. Tokas described differences among stations.
- He described evidence of the earthquake in Queen of the Valley buildings, comparing the damage between the SPC 3 building and the SPC 5 building.
- He discussed the Kaiser facility including the bracing system of the parking structure.
- OSHPD staff also examined the Napa State Hospital, Veterans Home in Yountville, Sonoma Medical Center, and hundreds of buildings between Napa and Vallejo.

Discussion and Public Input

Mr. Elhassan asked about testing for the moment frames. Mr. Tokas replied that since the peak acceleration was more than .3Gs, OSHPD did check joints on moment frames for cracks. OSHPD did not have all results but have not seen cracks as yet.

Mr. Karpinen asked what it meant to say that the earthquake was 7 kilometers below the surface. Ms. Thornburg explained that the vertical crack in the ground was 15

DRAFT

kilometers deep; the western side of the fault shifted a little to the north. The epicenter point was 7 kilometers deep; from there the rupture propagated up and northward.

Mr. Huang asked how the ground motion compared to the latest United States Geological Survey (USGS) map value. Mr. Tokas and Ms. Thornburg replied that it was comparable.

Mr. Elhassan asked about OSHPD standard procedure for earthquake response; Mr. Tokas replied that there is a book that OSHPD follows step by step.

An Interested Party asked if the newer construction at Queen of the Valley, being code-compliant, shows that current bracing systems are on the right track. Mr. Tokas answered that they certainly are. He pointed out that the construction side must follow what the design side has produced, using components that have met the necessary quality control.

Mr. Johnson asked about the disruption to utilities; Mr. Tokas responded that at the hospital it was three hours. Natural gas was not disrupted – there were no leaks.

Ms. Naaseh asked if OSHPD relies on structural engineers outside of the organization if the earthquake impact area is large. Mr. Tokas answered that it does not and explained the steps it uses.

DRAFT

Mr. Hurlbut inquired about any comments on medical gas tanks; Mr. Tokas replied that there was nothing.

Ms. Thornburg asked about the bracing on the new buildings. Mr. Tokas responded that there were no obvious signs that the bracings yielded. (An Interested Party noted that where scratch plates are being added for retrofitting, it is important to install access panels.)

Mr. Tokas informed Mr. Elhassan that OSHPD's Emergency Response Center is technically designed for OSHPD to administer emergency response to both Southern California and Northern California. Mr. Coleman and Mr. Huang emphasized that certified staff evaluators are trained to take care of their families first.

Ms. Naaseh asked if OSHPD inspects buildings that support the health care facilities such as data centers. Mr. Tokas answered that if they are onsite, they are inspected.

11. Google Earth Presentation – Hussain Bhatia

Dr. Bhatia stated that the Seismic Compliance Unit had started the mapping program to see where the work was. The program plots construction activity at OSHPD facilities.

- It can be used interactively.
- Users need to have Google Earth installed on their computers.
- A red dot means that the facility has some SPC 1 buildings; a yellow dot signifies some SPC 2 buildings; a green dot signifies all compliant buildings.
- Google Earth allows zooming to any site.

- Dr. Bhatia demonstrated how to obtain information on buildings and projects related to them.
- A link to the California Strong Motion Instrumentation Program (CSMIP) website is available for instrumentation details.
- Links provide access to the USGS seismic fault layers and shake maps for doing overlays.
- Skilled Nursing Facilities are on a separate page with basic facility and construction activity information.
- Dr. Hussain demonstrated use of the program from a smart phone.
    - Names are visible all the time because there is no mouse hover.
    - The same functions, including zooming, are available except for layering.
- The Seismic Compliance Unit has another product in beta testing called Open Data Initiative. It publishes data, including OSHPD data, in an open format called Socrata. The program allows users to create custom maps and graphs.

Discussion and Public Input

Mr. Johnson asked if all of the data is stored offsite in the cloud; Dr. Bhatia assured him that all of OSHPD's computer data is backed up offsite. The data set is updated every two weeks.

Mr. Johnson asked about PG&E's participation. Mr. Tokas answered that specific scientists in San Francisco are participating.

Ms. Naaseh asked about CalTrans; Mr. Tokas said that they utilize ShakeCast.

(13.) SmartBoard Demonstration – Ali Sumer, FDD

Mr. Tokas stated that a variety of Internet platforms (Link, WebEx, etc.) are available to allow people in different offices to work on the same document simultaneously.

Mr. Dunger played the role of a design professional submitting a set of documents to OSHPD electronically. He demonstrated communication on a SmartBoard with Dr. Ali Sumer via Microsoft Link on a laptop. They made a change to a plan in real time.

Discussion and Public Input

Mr. Karpinen asked if the SmartBoard is in use yet. Mr. Tokas replied that as yet there is no protocol, but the field staff is proficient and using it successfully.

Ms. Eck noted that Kaiser regularly uses something similar. She asked if plans can be manipulated beyond cut and paste. Mr. Dunger replied that the capabilities are on the architect side – OSHPD can view whatever they can do, and they make the changes.

An Interested Party asked how changes are currently initiated with field staff. Mr. Tokas answered that arrangements are initiated via a simple phone call or email. It can be done through the lead architect or the structural plan checker.

(12.) Facilities Development Division Update – Paul Coleman, Deputy Director

Mr. Coleman gave an FDD update. He began by giving current figures.

- The dollar value of projects in Plan Review has decreased by 60% since 2012.

- About $9.6 billion in construction is currently in progress. 56% of work in construction is over 70% completed.
- Between now and 2020, almost $3 billion will be spent on seismic compliance.
- Technology is changing health care: many procedures can be done on an outpatient basis that used to be done in a hospital.
- Because of high vacancy rates, many hospitals are considering downsizing.
- For Post Approval Document (PAD) contracts, most of the larger plans are done in-house now that would have been contracted out in the past.
- For this year, the majority of PADs – 67% – were done in the office with 33% done in the field.
- 69% of Plan Reviews and 80% of PADs are being done in 21 days or fewer.
- The Rapid Review Unit is handling 41% of Plan Reviews in the office.
- 44-53% of regular reviews are completed in half the target time.
- The number of SB 1838 projects continues a downward trend – this quarter there are only 10.
- Many more seminars are being given.
- The Building Standards Unit is working on standards for Free-Standing Acute Care Psychiatric Hospitals.
- Regarding the main objectives set last March, the eCA rolled out in April; it is the client access to the Electronic Services Portal. 81% of applications are currently being submitted using eCA.
- Over the Counters (OTCs) are being expanded in Sacramento, Los Angeles, and offsite locations.
- Standard Details are updated for the 2013 California Building Code.

- OSHPD is working on determining which projects qualify for the Electronic Plan Review program.
- An Electronic Plan Review pilot in the Rapid Review Unit will use new software from ePlan Soft combined into Accela.
- Pre-approval for testing laboratories is now consistent as the result of a new program.
- OSHPD has issued 10 new Code Application Notices (CANs) and six Policy Intent Notices (PINs) this year.
- OSHPD has developed a new SNF web page.
- OSHPD has developed some how-to guides for single-story SNFs.
- Mr. Coleman testified at a Senate Committee hearing in San Francisco on earthquake Early Warning Systems.
    - He noted that MRI equipment may take weeks to recalibrate after an earthquake – but this equipment is very much needed because of the types of injuries that occur from earthquakes.
    - He discussed what Early Warning Systems can do for hospitals (infection control, elevators, gas mains, etc.).
    - Making an Early Warning System 100% reliable would require an influx of huge numbers of sensors – but the costs would be high.
- In March OSHPD began to develop its Strategic and Operational Plan.
    - The executive staff first met with consultants, who then met with supervisory staff; they found that the responses from the two were similar.
    - They developed a Community Map that identifies public and private stakeholders in order to accomplish the established goal. Stakeholders

include designers, builders, health care providers, Inspectors of Record, facilities managers, industry associations, the Hospital Building and Safety Board, other jurisdictional agencies, and other OSHPD divisions.

  - They came up with four Strategic Goals, which Mr. Coleman explained. All are needed for operational balance so the executive staff developed a Balance Scorecard.

- The Operational Plan Roll-Out was held on October 28. FDD set up a tour path to show its plan and the work it does.
  - Eric Jacobsen spoke about the history of the building codes.
  - Dr. Bhatia gave a presentation on FDD's current Plan Review process.
  - Diana Scaturro showed the steps of Electronic Plan Review.
  - Dr. Lobo spoke about autocodes and the future of Plan Review.
  - Mr. Coleman gave a presentation of the new SmartBoard technology and how it can be used for field activities.

14. Special Presentation: Experimental Assessment of Lath and Plaster/Metal-Stud Partitions – Rami Elhassan

Mr. Elhassan stated that the project had excellent cooperation between the designers, owners, and OSHPD. They had even authored a paper together at the project's close. The project was for an existing hospital and involved some remodeling and improvements.

- Mr. Elhassan supplied the technical details of the studs, anchors, and tracks in the existing partitions.

- He described the removal of the cabinet, rebuild of the metal stud, and final installation.
- He listed the steps:
    - Investigate and do material testing.
    - Analyze the quality of the existing partitions.
    - Prove through testing.
- Mr. Elhassan supplied the details of the steps.
- Staff proposed to the owner that the program would cost approximately $350,000 and save approximately $4 million in construction costs with a huge scheduling and operational impact.
- Mr. Elhassan showed a picture of the T-nails; Mr. Tokas explained why they went in that direction.
- Mr. Elhassan explained the partition slide test that they devised. He explained for Ms. Naaseh why they pushed 6" above the bottom rail instead of directly against it.
- Mr. Elhassan explained the full partition test.
- He showed photos of the test results.
- He and Mr. Tokas had collaborated on a paper about the tests which won an award from the Structural Engineers Association.

Discussion and Public Input

Ms. Naaseh asked if they had tried assembling the existing studs with sheetrock attached to them. Mr. Elhassan said they had not, keeping expense in mind.

DRAFT

Mr. Trailer asked if the tests cost what they had thought beforehand; Mr. Elhassan replied that they had. The testing agency fee had been $150,000.

15. SB 499 Update – Roy Lobo

Mr. Lobo spoke about SPC 1 buildings, which are defined as those buildings that pose a risk of collapse or significant loss of life.

- SPC 1 buildings are no longer allowed to provide General Acute Care (GAC) services beyond the extension date.
- Most hospitals with SPC 1 buildings are using SB 90 extensions – currently totaling 214 buildings.
- The total number of SPC 1 buildings is 354. Mr. Lobo reported on the rest of the numbers in the report.
- AB2557 amended the Hospital Safety Code and changed the definition for compliance of extensions.
- Mr. Lobo showed a snapshot of the 22 facilities that will have no SPC 1 buildings performing GAC functions by January 2015. The other facilities will have to turn in an amended SB 90 application to obtain a valid extension.
- Mr. Lobo showed preliminary anticipated completion dates based on timelines reported in the SB 499 reports.
- He showed the chosen Method of Compliance totals – Rebuild, Replace, Retrofit, and Remove. Since last year, the number of buildings that are going to remove GAC functions has increased.

DRAFT

- Every facility with an SPC 1 building is going to receive an email from Brett Beekman with a Summary Sheet, listing the information they have provided in the SB 499 report.
- Mr. Lobo compared SB 499 with SB 90. The services listed in SB 499 need to match the services listed in the SB 90 application; however, there are some discrepancies between them.
- Supervisors are going to be checking on the 100 or so facilities with SPC 1 buildings that do not have qualifying projects. This year's deadline for having a qualifying project is January 1, 2015. Facilities also have to submit a Financial Capacity report.

(17.) Nominations for HBSB Chair and Vice Chair – Michael Foulkes

The HBSB Board Members will vote to elect the new Chair and Vice-Chair who will officially take office on January 1, 2015

MOTION: (M/S/C/) [Huang/Macpherson]

The Board unanimously elected Scott Karpinen as HBSB Chair and Rami Elhassan as HBSB Vice-Chair for 2015.

(16.) Regulations Update – Glenn Gall, FDD Building Standards Unit

Proposed Code Changes for the Next Code Cycle

Mr. Gall focused on the architectural elements in the upcoming code cycle and the triannual adoptions of all codes.

- The Building Standards Unit has been working on maintenance – reformatting codes as well as gathering the common elements that occur throughout nursing units, surgical units, imaging units, and so on. If they are the same throughout, the group wants to put them in general construction requirements.
- In anesthesia service space, perioperative support will be restructured.
- Emergency services code changes will be more in sync with licensing requirements.
- Guidance will be added to show designers minimum requirements for additional nuclear medicine services provided in facilities covered by code.
- Information will be added regarding outpatient service space in hyperbaric facilities.
- A supplemental surgery services section will be added for hybrid ORs.
- Mr. Gall outlined further changes:
    - Change of function line to 34A.
    - Repealing SNF requirements.
    - Revising nurse call requirements for SNFs.
    - Revising the California Administrative Code to cover reopening of closed projects.
    - Determining whether changes should be made to testing and recertifying IORs.
    - Addressing proposed code amendments by the Dialysis Association.
    - Revise code to allow flexible duct in surgical clinics and specific hospital areas such as administration, storage, etc.

DRAFT

- Mr. Gall displayed a 2015 calendar showing where regs have to go. The Building Standards Unit always tries to involve as many people as possible in contributing to the regs.
- Some of the items will probably have to undergo a full-blown California Environmental Quality Act (CEQA) analysis, which will greatly affect the timing.

Mr. Gall closed with a request: coordination of their packages with HBSB committee meetings at as late a date as possible is appreciated. In a triennial adoption, they need to review the published model code to see where their amendments go – whether they are necessary or not anymore. However, international plumbing and mechanical groups have not finalized their documents yet, which is holding up Mr. Gall's group.

18. Meeting Wrap Up – John Egan, HBSB Chairperson

Mr. Egan directed the members to the roster and other information at the back of the meeting binders.

19. Information Items

Ms. Kane directed the Board members to four documents in the binder:

- The permission to use personal vehicle for Board business form, to be submitted with Expense Reports.
- The agreement to review the sexual harassment policy form, for signature.
- The month-by-month meeting "time sheet," for signature.
- The travel expense report.

Mr. Egan adjourned the meeting at 3:47 p.m.

DRAFT

2014 HBSB

Committee Meetings

Administrative Processes and Code Changes Committee

oshpd Office of Statewide Health Planning and Development

Hospital Building Safety Board
400 R Street, Suite 200
Sacramento, California 95811-6213
(916) 440-8453
Fax (916) 324-9118
http://www.oshpd.ca.gov/Boards/HBSB/index.html

1/17/14

HOSPITAL BUILDING SAFETY BOARD
Administrative Processes and Code Changes Committee

MEETING NOTICE
Thursday, January 30th, 2014
10:00 a.m. — 4:00 p.m.

at the
Office of Statewide Health Planning and Development
400 R Street, Suite 452
Sacramento, CA 95811
(916) 440-8453

And, at the
Metropolitan Water District Headquarters
700 N. Alameda Street, Suite 2-546
Los Angeles, CA 90012
(213) 897-0166

Board Members: Scott Karpinen, Chair; John Donelan, Vice-Chair; Bob Chason; Enid Eck; Rami Elhassan; Henry Huang; Bruce Macpherson; Carl Scheuerman

Consulting Member: Michael Gritters

OSHPD Staff: Gary Dunger; Glenn Gall; Ramin Sadr

HBSB Staff: Linda Janssen, Executive Director; Cathy Kane; Evett Torres

MEETING AGENDA

NOTE: Agenda order is tentative and subject to change without prior notice. All times are approximate and subject to change. A 30-minute to one-hour lunch will be taken sometime during the day.

1. **Welcome and Introductions**

2. **Review Committee Goals for 2014**
   - Discussion and public input

3. **Report on Code Update process – Glenn Gall**
   - Status of Code Cycle
   - OSHPD 3SE Update
   - Interventional Radiology
   - Hybrid Operating Room
   - Discussion and public input

4. **Discussion on 2013 CPC definition for "Handwashing Fixtures"– Scott Karpinen**
   - Discussion and public input

5. **Discussion on "Materially Alter" Code Application Notice – Scott Karpinen**
   - Discussion and public input

6. **Comments from the Public/Board Members on Issues not on this Agenda:**

- The Board will receive comments from the public/members at this time on matters not on the agenda. Matters raised at this time will be taken under consideration for placement on a subsequent agenda.

7. **Adjournment**

REMINDER: Please call (916) 440-8453 on Wednesday, January 29th, after 3:00 p.m. to confirm that the meeting will be taking place as scheduled. The recording will verify the meeting date and location.

NOTE: Meeting facilities and restrooms are accessible to the physically disabled. If any special accommodations (assistive listening device, sign language interpreter, etc.) are needed, please contact Board Staff at (916) 440-8453. Requests should be made as soon as possible but no later than 10 business days prior to the meeting.

Parking:
Sacramento—There are garages at 500 R Street and CalPERS Plaza. CalPERS Plaza has two entrances: one on Fifth Street, north of R Street, which charges $2./hour or $8/day; and another on Q Street, between Fourth and Fifth Streets, which charges $2.50/hour or $12/day. There are also 10-hour parking meters around the perimeter of the building.
Los Angeles—There is valet service at the Metropolitan Water District Building that is available 8 am to 5 pm and they charge between $6 and $12. There is also Five Star Parking lot on Cesar Chavez Avenue and Alameda Street that charge $14/day or $2.00 every 20 minutes.

Questions? Call Board Staff at the above phone number.

Committee Goals for 2014

Administrative Processes & Code Changes Committee

- Hospice Regulations
- PINs and CANs (ongoing)
- OSHPD fee structure ($250 ACD fee)
- eSP enhancements and functionality
- New code updates/preparation for 2016 codes; address addendum code issues; align California codes with national standards
- Materially alter—especially structural
- OSHPD-3SE

This page left intentionally blank.

2010 CPC DEFINITIONS

210.0 – H –

Handwashing Fixture [OSHPD 1, 2, 3 & 4]. *Is a special application sink having a water supply spout mounted so the discharge point is at least 5 inches (127 mm) above the fixture rim and equipped with hot and cold supply controls not requiring direct contact of the hands for operation. The fixture can not be equipped with an aerator and wrist or elbow blade handles but may be equipped with a non-aerating laminar flow device. Sensor operated fixtures may be used, provided they are either battery operated or connected to the essential electrical system. Deck-mounted manual temperature controls shall be permitted.* 1

2013 CPC DEFINITIONS

210.0 – H –

Handwashing Fixture [OSHPD 1, 2, 3 & 4]. *Handwash fixtures consist of faucet, trim and sink as described:*

(1) Faucets and Trim

2 *a. Hand washing fixtures used by medical and nursing staff, patients, and food handlers shall be trimmed with valves that can be operated without the use of hands.*

i. Wrist or elbow blades shall be permitted where allowed per Table 4-2.

ii. Blade handles used for this purpose shall be at least 4 inches (102 mm) in length.

b. Sensor operated fixtures shall be capable of functioning during loss of normal power.

c. Faucets shall not be equipped with an aerator but may be equipped with a non-aerating laminar flow device.

1 *d. If deck-mounted manual temperature controls are used they shall use wrist blades at least 4 inches (102 mm) in length.*

e. Faucets shall be equipped with gooseneck spouts. A gooseneck spout is a deck or fixture-mounted spout so the discharge point of the spout return is at least 5 inches (127 mm) above the fixture rim.

(2) Sinks

a. Sinks in hand-washing fixtures shall be designed and installed to prevent splashing outside of the sink.

b. Sinks shall have well-fitted and sealed basins to prevent water leaks onto or into the cabinetry or wall spaces.

TABLE 4-2
[OSHPD 1, 2, 3 & 4][24] MINIMUM PLUMBING FACILITIES

SPACE	HANDWASHING FIXTURE	SCRUB SINKS[3]	TOILETS	BATHTUBS OR SHOWERS	SERVICE SINKS[1]	CLINIC SINKS
Administration Lobby						
Public Toilet - Male	*1*[2]		*1*			
Public Toilet - Female	*1*[2]		*1*			
Airborne infection isolation room	*1*					
Airborne infection isolation anteroom	*1*[20]					
Airborne infection isolation toilet room	*1*[2]		*1*[5]	*1*[5]		
Cardiac Catheterization procedure room		*1*[4, 33]				
Central Sterile Supply	*1*[15]					
Cesarean/Delivery Service Space						
Labor Rooms	*1*[33]		*1*[9]	*1*[9]		
Recovery Room	*1*[33]					*1*
Drug distribution station	*1*					
Cesarean operating room		*2*[10, 33]				
Delivery room		*1*[10, 33]				
Staff lounge						
Staff Toilet - Male	*1*[2]		*1:1-15*			
Staff Toilet - Female	*1*[2]		*1:1-15*			
LDR or LDRP room	*1*[33]		*1*	*1*		
Waiting area/room						
Public Toilet - Male	*1*[2]		*1*			
Public Toilet - Female	*1*[2]		*1*			
Clinical Laboratory Service Space[11]	*1*					
Dietetic Service Space					*1*	
Kitchen	*1*[33]					
Food serving area	*1*[33]					
Food Preparation	*1*[33]					
Dietary Staff Toilet - Male	*1*[2]		*1:1-15*			
Dietary Staff Toilet - Female	*1*[2]		*1:1-15*			
Emergency Service Treatment room	*1*					
Open plan	*1:4 cubicles*					
Observation units	*1:4 cubicles*					
Trauma/Cardiac, Emergency surgery, Cystoscopy, Cast Room		*1*[4,33]				
Intensive Care Units[7]					*1*	*1*
Open plan	*1:3 beds*[33]					
Patient rooms[28]	*1*[33]					
Newborn Intensive Care Unit (NICU)	*1:4 bassinets*[17, 33]				*1*	*1*
Control station	*1*[33]					
Staff lounge						
Staff Toilet - Male	*1*[2]		*1:1-15*			
Staff Toilet - Female	*1*[2]		*1:1-15*			
Employee dressing rooms and lockers						
Staff Toilet - Male	*1*[2]		*1:1-15*			

SPACE	HANDWASHING FIXTURE	SCRUB SINKS[3]	TOILETS	BATHTUBS OR SHOWERS	SERVICE SINKS[1]	CLINIC SINKS
Staff Toilet - Female	*1*[2]		*1:1-15*			
Exam and treatment rooms	*1*					
Housekeeping room[1]					*1*	
Laboratories	*1*[15]					
Laundry soiled linen, receiving, holding and sorting	*1*					
Medicine preparation room	*1*[19]					
Morgue and Autopsy	*1*					
Nourishment area	*1+1*[2]					
Nuclear Medicine room	*1*					
Mold room	*1*					
Patient room	*1*					
Patient toilet and bath facilities[13]	*1*[2]		*1:4 beds*	*1:12*[16]		
Central bathing facility[16]			*1*	*1*		
Administration Center or Nurses' Stations[27]	*1*		*1*[12]			
Newborn/well baby nursery	*1:6 bassinets*[33]					
Workroom	*1*[33]					
Gastrointestinal endoscopy procedure room	*1*[33]					
Pediatric and Adolescent Unit toilet room	*1*[2,26]		*1*[26]			
Pharmacy	*1*[25]					
Staff Toilet - Male	*1*[2]		*1:1-15*			
Staff Toilet - Female	*1*[2]		*1:1-15*			
Compounding area for parenteral solutions	*1*					
Postanesthesia care units (PACU)						*1*
Open plan	*1:4 gurney spaces*[33]					
Individual rooms	*1*[33]					
Protective environment room	*1*[33]					
Protective environment anteroom	*1*[20,33]					
Protective environment toilet room	*1*[2]		*1*[5]	*1*[5]		
Psychiatric unit patient room	*1*		*1*			
Radiological/Imaging Services Space	*1*		*1*[29]			
Computerized tomography (CT)						
Ultrasound[8]			*1*[30]			
Angiography		*1*[4, 31]				
Fluoroscopy[8]			*1*[30]			
Staff Toilet[18] *- Male*	*1*[2]		*1:1-15*			
Staff Toilet[18] *- Female*	*1*[2]		*1:1-15*			
Rehabilitation Therapy Space						
Training toilet			*1*			
Physical therapy service space	*1*					
Occupational therapy service space	*1*					
Speech pathology	*1*					
Renal Dialysis Service Space	*1:4 stations*				*1*	
Bloodborne Infection Isolation Room	*1*					
Nurses' station	*1*					
Medication dispensing	*1*					
Home training room	*1*					

SPACE	HANDWASHING FIXTURE	SCRUB SINKS[3]	TOILETS	BATHTUBS OR SHOWERS	SERVICE SINKS[1]	CLINIC SINKS
Repair room[11]	*1*				*1*	
Dialysis Patient toilet	*1*		*1*			
Staff lounge						
Staff Toilet - Male	*1[2]*		*1:1-15*	*1 shower*		
Staff Toilet - Female	*1[2]*		*1:1-15*	*1 shower*		
Surgical Service Space		*2[33]*			*1*	
Staff clothing change areas						
Staff Toilet - Male	*1[2]*		*1*	*1 shower*		
Staff Toilet - Female	*1[2]*		*1*	*1 shower*		
Clean-up rooms	*1*					
Substerile area	*1*					
Anesthesia workroom	*1*					
Soiled workroom or soiled holding	*1*					*1[34]*
Cancer treatment/infusion therapy treatment	*1:4 stations*					
Utility/Work Room						
Clean[21]	*1*					
Soiled[22]	*1*					*1[14]*
Patient beds [Skilled Nursing/Intermediate Care Facilities][medical model]	*1:8[2]*		*1:6*	*1:20*		
Patient toilet and bath facilities[13] [Correctional Treatment Center]	*1:8[2]*		*1:6*	*1:12*		
Airborne infection isolation anteroom[6] [Correctional Treatment Center]	*1[6]*		*1[6]*	*1[6]*		
Airborne infection isolation anteroom [Correctional Treatment Center]	*1*					
Protective environment room[6] [Correctional Treatment Center]	*1[6]*		*1[6]*	*1[6]*		
Protective environment anteroom [Correctional Treatment Center]	*1*					

Notes:

1 Each department or nursing unit shall be served by a housekeeping room equipped with a service sink. Departments may share service closets provided the departmental services are compatible. A dedicated housekeeping room shall be provided for the following services: Surgical/Catherization, ICU, NICU, nursery, dietary, renal dialysis and outpatient surgery.

2 Conventional spouts and controls on hot-and cold-water supplies are acceptable. Aerators are not permitted. Non-aerating laminar flow devices are permitted. Nourishment areas shall have a handwashing fixture in or immediately accessible from the nourishment area, in addition to a nourishment sink.

3 Scrub sinks shall be located outside of sterile procedure rooms. A minimum of two scrub sinks shall be provided in a surgical unit containing one operating room. Four scrub sinks shall be provided in surgical units containing two operating rooms. One additional scrub sink shall be provided per each additional operating room.

4 The scrub sink is in addition to the required number for surgeries.

5 The following fixtures shall be provided in airborne infection or protective environment rooms of hospitals only:

a. Within an adjoining toilet room, a lavatory, a shower containing a seat or a space for a shower chair, and toilet equipped with bedpan flushing attachment with a vacuum breaker.

b. A handwashing fixture within a separate anteroom.

6 The following fixtures shall be provided in isolation rooms of correctional treatment centers only:

a. Within an adjoining toilet area, a handwashing fixture, a shower containing a seat or a space for a shower chair, and water closet equipped with bedpan flushing attachment with a vacuum breaker.

b. A handwashing fixture within a separate anteroom.

7 Includes burn center spaces, acute respiratory-care service spaces, and coronary-care service spaces.

8 A toilet room with handwashing fixture shall directly adjoin each procedure room.

9 One toilet with lavatory and one shower may serve two labor rooms.

10 One additional scrub sink for each additional cesarean or delivery operating room.

11 Provide emergency eye-wash and shower.

12 Conveniently located for staff use.

13 Fixtures serving individual patient rooms shall not be considered as meeting the required ratios for bedrooms not served by individual adjoining toilet or bathrooms.

14 The clinic sink may be deleted if all bedrooms in the nursing unit are provided with adjoining toilets with bedpan flushing devices.

15 Conventional controls on hot-and cold-water supplies are acceptable. The water discharge points shall be 5 inches (127 millimeters) above the fixture rim. Aerators are not permitted. Non-aerating laminar flow devices are permitted.

[16] *A minimum of one bathtub is required on each floor of an acute care or acute psychiatric hospital providing skilled nursing or intermediate care services. Special bathing facilities/gurney shower shall be provided at a minimum ratio of one per 100 beds for acute care facilities.*
[17] *In a multiple-bed room, every bed position shall be within 20 feet (6 meters) of a hands-free handwashing fixture. Where an individual room concept is used, a handwashing fixture shall be provided within each infant care room.*
[18] *When three or more procedure rooms are provided.*
[19] *If a separate medicine room is provided, the room shall be equipped with a sink in addition to the nurses' station handwashing fixture. Hot-water supplies are optional.*
[20] *Not required when there is a handwash fixture in the patient bed room.*
[21] *Handwashing fixtures may be deleted if room is used for storage and holding only.*
[22] *If room is used only for temporary holding of soiled materials, clinic sink and work counter may be omitted. If the flushing-rim clinical sink is eliminated, facilities for cleaning bedpans shall be provided elsewhere.*
[23] *Toilet shall be equipped with a bedpan flushing attachment.*
[24] *Optional services approved by the licensing agency shall comply with the applicable space requirements of OSHPD 1 and 2.*
[25] *Shall be provided in each separate room where open medication is handled.*
[26] *Conveniently accessible throughout the unit.*
[27] *Includes rooms or areas within coronary and intensive-care units and postanethesia recovery rooms.*
[28] *Modular toilet/sink combination units located within a privacy curtain may be used within individual patient space or private room. The toilet fixture shall be completely contained within cabinetry when not in use, and shall be enclosed when flushed. Bedpan washers shall not be permitted in patient bedrooms.*
[29] *In service spaces with procedure rooms that do not have dedicated patient toilets, provide a minimum of one patient toilet room with a separate handwashing fixture within the service space.*
[30] *Toilet room shall be accessible from the procedure room.*
[31] *Scrub sink shall be located outside the staff entrance to the procedure room.*
[32] *Not used.*
[33] *Handwashing and scrub sink fixtures shall not be equipped with wrist or elbow blades but shall be equipped with sensor controls, or controls that do not involve contact with the upper extremities.*
[34] *If room is used only for temporary holding of soiled material, clinic sink and work counter may be omitted.*

TABLE 4-3

TYPE OF BUILDING OR OCCUPANCY	WATER CLOSETS (FIXTURES PER PERSON)		URINALS (TROUGH URINAL TO INDIVIDUAL URINAL EQUIVALENCE)	LAVATORIES (FIXTURES PER PERSON)	BATHTUBS OR SHOWERS FIXTURES PER PERSON)[7]	DRINKING FOUNTAINS (FIXTURES PER PERSON)[3]
	MALE	FEMALE	MALE			
Nonindustrial—office buildings, public buildings and similar establishments	1 1-15 2 16-35 3 36-55 4 56-80 5 81-110 6 111-150 1 additional for each additional 40 employees or fraction thereof	1 1-15 2 16-35 3 36-55 4 56-80 5 81-110 6 111-150	Length of trough urinal / Number of individual urinals 24" (610 mm) 1 36" (914 mm) 2 48" (1219 mm) 2 60" (1524 mm) 3	1 1-15 2 16-35 3 36-60 4 61-90 5 91-125 1 additional for each additional 4 employees or fraction thereof	1:10 persons per shift required to shower	—
Industrial–factories, warehouses, loft buildings and similar establishments	1 1-15 2 16-35 3 36-55 4 56-80 5 81-110 6 111-150 1 additional for each additional 40 employees or fraction thereof	1 1-15 2 16-35 3 36-55 4 56-80 5 81-110 6 111-150	24" (610 mm) 1 36" (914 mm) 2 48" (1219 mm) 2 60" (1524 mm) 3 72" (1829 mm) 4	1 to 100 employees 1 per 10 Over 100 employees 1 additional for each additional 15 employees or fraction thereof	1:10 persons per shift required to shower	—

Notes:
[1] *The figures shown are based on one fixture being the minimum required for the number of persons indicated or any fraction thereof.*
[2] *Each water closet shall occupy a separate compartment which shall be equipped with a door, door latch and clothes hook. The door and the walls or partitions between fixtures shall be sufficient to assure privacy.*
[3] *Drinking fountains shall not be located in toilet rooms.*
[4] *Washing facilities shall be reasonably accessible to all employees.*
[5] *Toilet facilities shall be accessible to the employees at all times. Where practicable, toilet facilities should be within 200 feet (61 m) of locations at which workers are regularly employed and should not be more than one floor-to-floor flight of stairs from working areas.*
[6] *Urinals may be installed instead of water closets in toilet rooms to be used only by men provided that the number of water closets shall not be less than two thirds of the minimum number of toilet facilities specified. The length of trough urinals to the equivalent number of individual urinals shall be based on the above table.*
[7] *When there are less than five employees, separate toilet rooms for each sex are not required provided toilet rooms can be locked from the inside and contain at least one water closet.*
[8] *Twenty-four linear inches of wash sink or 18 inches of circular basin, when provided with water outlets for such space, shall be considered equivalent to one lavatory.*
Exception: *The requirements of Table 4-3 do not apply to mobile crews or to normally unattended work locations provided employees at these locations have immediately available transportation to nearby toilet facilities which meet the requirements of Table 4-3.*

Facilities Development Division
Office of Statewide Health Planning and Development
400 R Street, Suite 200 • Sacramento, CA 95811 • (916) 440-8300
700 N. Alameda Street, Suite 2-500 • Los Angeles, CA 90012 • (213) 897-0166

CODE APPLICATION NOTICE (CAN)
H&S Code §129851

SUBJECT
Amended Construction Documents

CAN: 2-107.4

Effective: 1/01/2011

CODE SECTIONS

Chapter 7, Sections 7-111 and 7-153(a)
2010 California Administrative Code

Chapter 1, Division II, Section 107.4
2010 California Building Code

2010 California Administrative Code
Chapter 7

7-111. Definitions.

MATERIALLY ALTER as applied to construction projects or approved construction documents means any change, alteration or modification, as determined by the Office, that alters the scope of a project, causes the project to be in noncompliance with the *California Building Standards Code*, or causes an unreasonable risk to the health and safety of patients, staff or the public.

7-153. Addenda, change orders and instruction bulletins.

(a) **Changes in the work.** Work shall be executed in substantial conformance with the construction documents approved by the Office. Changes in the work shall be made by addenda, change orders, or instruction bulletins approved by the Office. Changes in the work include, but are not limited to, the following: Correction of errors in design and/or construction to bring the construction documents and/or construction into compliance with applicable codes; change(s) in the scope of the work; and additional work required because of discovered conditions. Only changes that materially alter the work shall be submitted to the Office for review and approval as either an addendum, change order or instruction bulletin. Changes in the work that do not require an addendum, change order, or instruction bulletin shall not be deemed to grant authorization for any work to be done in violation of the provisions of all applicable codes.

2010 California Building Code
Chapter 1, Division II

107.4 Amended construction documents. Work shall be installed in accordance with the approved construction documents, and any changes made during construction that are not in compliance with the approved construction documents shall be resubmitted for approval as an amended set of construction documents. *[OSHPD 1, 2 & 4] Change in the work shall be in accordance with Title 24, Part 1, Chapter 7, Section 7-153.*

PURPOSE

The purpose of this Code Application Notice is to define the types of changes to the approved construction documents that do not materially alter the work during construction and therefore are not subject to OSHPD review.

BACKGROUND

The 2010 California Administrative Code (CAC) and the 2010 California Building Code (CBC) state that all construction work must be executed in substantial conformance with the construction documents approved by the Office of Statewide Health Planning and Development (OSHPD). The CAC requires changes that materially alter the work must be made by addenda, change orders, or instruction bulletins approved by OSHPD. Materially alter is defined in the CAC as any change, alteration, or modification, as determined by the Office, which does any of the following:

- Alters the scope of a project
- Causes the project to be in noncompliance with the California Building Standards Code (CBSC)
- Causes an unreasonable risk to the health and safety of patients, staff, or the public

The CBC requires any changes made during construction that are not in compliance with the approved construction documents shall be resubmitted to OSHPD for approval as an amended set of construction documents.

OSHPD has adopted both the CAC regulations and the CBC code requirements regarding changes to approved construction documents. Therefore, on or after March 22, 2011, the following interpretation shall apply to changes resulting in amended construction documents.

INTERPRETATION

Addenda, Instruction Bulletins and Change Orders are amended construction documents that are typically contractual documents between owners, designers and builders. Therefore, OSHPD will only review changes made during construction that materially alter the work (see *Appendix A* for guidelines). Changes of this nature shall be submitted for approval as an amended set of construction documents. The submittal shall consist of an *Application for Amended Construction Documents Plan Review*, two sets of plans and specifications of the amended construction document(s) and upon implementation of OSHPD's new e-Services Portal automated system (tentatively March 22, 2011) a $250.00 non-refundable application fee.

The following types of changes in the work do not materially alter the work and do not require the submission of amended construction documents to OSHPD.

1. Clarification and interpretation of plans and specifications by the responsible design professional. If calculations by the structural engineer in responsible charge or by the delegated structural engineer are necessary to determine structural or nonstructural adequacy, an amended construction document submittal must be made to OSHPD for review.

2. Construction means and methods, such as construction sequencing, coordination of the work, and methods of assembly/construction. Construction means and methods do not include work that would require an Alternate Method of Compliance or an Alternate Means of Protection, such as weather protection for gypsum board installation. Temporary construction, such as temporary exiting, temporary air handlers, temporary bulk oxygen tanks, or temporary shoring supporting an occupied building under OSHPD jurisdiction are not considered means and methods and thus would require a separate permit or the submittal of an amended construction document to OSHPD for review.

3. Substitutions of equipment, products, or materials. The equipment, product, or material must be code approved/acceptable; perform the same function as the equipment, product, or material that it is replacing; must not increase the mechanical or electrical loads to the building systems; must not increase loads to lateral and gravity load-bearing structural frame members; and must meet the design requirements for the project. Changing from one kind of equipment, product, or material to another, such as changing from drilled-in concrete anchors to concrete screw anchors or changing the top-of-wall fire-resistive material/design are not considered substitutions and require the submittal of an amended construction document to OSHPD for review.

   If calculations by a structural engineer are necessary to determine structural or nonstructural adequacy, an amended construction document must be submitted to OSHPD for review.

4. New details that are based on other approved details, in whole or in part, including referenced standards or preapproved details. Reference to the approved details must be shown.

5. Final routing configurations of ducts, conduits, pipes, etc. where these are shown diagrammatically on the approved plans. Submittal of an addendum, change order, or instruction bulletin will be required when additional fire/ smoke dampers, non pre-approved seismic fittings, or specially engineered braces or hangers are necessary to accommodate the final configuration or routing.

6. Dimensional changes to rooms, other than Incidental Use Areas, that do not affect code required minimum dimensions, fixed dimensions, minimum room or space requirements and required clearances. Applicable code sections and minimum dimension and space requirements must be shown on plans for confirmation by OSHPD field staff.

7. Relocation of doors, windows, electrical switches and outlets, plumbing fixtures, etc. that do not require additional changes to the work to make the relocation code compliant.

8. Relocation or reconfiguration of cabinetry that does not affect code required minimum dimensions and clearances, minimum room or space requirements, minimum storage requirements. Cabinetry reconfiguration shall not increase loads to supporting members, such as wall studs and ceiling framing. Applicable code sections and minimum dimension and space requirements must be shown on plans for confirmation by OSHPD field staff.

If the architect or engineer in responsible charge of a project determines that plans and/or specifications are necessary for a change that does not materially alter the work, all such plans or specifications shall be stamped and signed by the appropriate design professional(s) pursuant to Section 7-115 of the 2010 CAC.

All changes in the work are subject to the concurrence of OSHPD field staff as to whether or not the change materially alters the work. To assist the OSHPD field staff, OSHPD recommends the architect or engineer in responsible charge maintain a Change Log in which all changes in the work are recorded and indentified as either materially altering the work or not materially altering the work.

Appendix A contains examples of changes that materially alter the work and do not materially alter the work.

Original Signed	12/31/2010
Paul Coleman	Date

APPENDIX A

The examples in this Appendix are provided for general guidance and are subject to paragraphs 1 through 8 of this CAN. Non-Material Alterations **do not** require OSHPD review, but are subject to the concurrence of OSHPD field staff. Material Alterations **do** require OSHPD review.

CIVIL

Non-Material Alterations

- Modifications to inverts that do not reduce slope of drain to below minimum requirements or cause proximity conflicts.
- Addition of site drains that do not cause overloading of existing piping.
- Addition of curbs, sidewalks or planters that have no effect on accessibility, fire department access, means of egress or other building requirements.
- Clarifications that resolve missing or conflicting information on the original approved plans, without changing the design intent or causing a code violation.

Material Alterations

- Modifications to site grading, curbs or parking adversely affecting site accessibility, fire department access or means of egress to the public way.
- Modifications to the underground fire mains.
- Modifications that create clearance issues to existing utilities, such as water, sewer, electrical, etc.
- Modification to trenching in the immediate vicinity of structural footings

ARCHITECTURAL

Non-Material Alterations

- Lowering ceiling heights to 8’ minimum (7’ for soffit) with no effect to other systems.
- Clarifications of room dimensions that do not reduce the required CBC area (length or width).
- Relocating registers, grills or lighting on reflected ceiling plan.
- Moving doors, sinks or casework without affecting accessibility or fire ratings. Doors, sinks or casework must be shown on original approved drawings.

- Dimensional clarifications to resolve conflicts of materials or equipment, or to provide information missing from the approved plans or specifications.
- Additions or revisions to the Testing, Inspection and Observation Program (TIO), without altering the intent of the original approved plans, specifications or code required tests.
- Clarifications of finish materials that do not conflict with the applicable CBC requirements.
- Door hardware clarifications, not affecting accessibility requirements or ratings of fire assemblies or adversely affecting or altering ingress and egress as required by code.
- Revisions to casework that do not result in added scope and uses approved anchorage details.
- Clarifications that resolve missing or conflicting information on the original approved plans, without altering the design intent, adversely affecting or altering the means of egress, or causing a code violation.

Material Alterations

- Adding access controls to doors.
- Modifications to Section 1224 or 1225 of the CBC required minimum clearances affecting functionality of space.
- Elimination of code required spaces.
- Any modifications adversely affecting accessibility requirements in Chapter 11B, CBC.

FIRE AND LIFE SAFETY

Non-Material Alterations

- Minor sprinkler head relocations (maximum 10 relocations per project), additional sprinkler heads (maximum 10 per project) or minor re-routing of piping. All changes must comply with NFPA 13.
- Relocating rated doors within walls that require opening protection. New location must be within the original wall design.
- Substitutions of approved listed assemblies for providing a rated separation on 1-hour or 2-hour rated partition types used for temporary construction barriers (must comply with CAN 9-1401).
- Substitutions of listed fire protection products, originally listed on approved plans, shop drawings or deferred approval.
- Clarifications that resolve missing or conflicting information on the original approved plans, without altering the design intent or causing a code violation.

Material Alterations

- Deletions of fire/smoke dampers, fire dampers or smoke dampers.
- Reclassifications of walls or assemblies that require opening protection.
- Modifications to any rated systems or penetration assemblies.
- Modifications to any rated systems or penetration assemblies.
- Additions to sprinkler systems that changes the hydraulic calculations.
- Substitution of equivalent listed fire protection products that alter support or bracing or performance characteristics or requirements.

STRUCTURAL

Non-Material Alterations

- Dimensional clarifications omitted on original approved plans that do not alter original location, structural calculations, load path or seismic requirements.
- Detail clarifications for information to equipment, casework, etc. shown on original approved plans and not requiring changes to the structural calculations.
- Modifications to slab edge distances that do not exceed those shown on the structural engineer's cantilever condition approval.
- Substituting equipment manufacturers, brands or models that does not alter the original equipment weights, size, footprint, dimensions, locations, anchorage or seismic certifications.
- Clarifications that resolve missing or conflicting information on the original approved plans, without altering the design intent or causing a code violation.

Material Alterations

- Additions, deletions and/or substitutions of structural members.
- Span increases for gravity members and/or any span changes for lateral force resisting elements.
- Altering of connections.
- Modifications to original pre-approvals, proprietary or manufactured items.
- Reduction of stud sizes or gauge, changes to headers or their connections.
- Changes in routing of services/systems or utilities that may violate Section 1224.4, CBC.
- Any change that violates the requirements in Section 7-125, CAC.

MECHANICAL

Non-Material Alterations

- Dimensional clarifications.
- Relocating registers, grilles or diffusers within the same originally approved room, provided that the code does not contain specific air device location requirements (for example Airborne Infection Isolation Rooms, Operating Rooms, etc.)
- Changes to duct sizes or shapes (square, round or oval) without changing airflow, tap locations, air balance requirements or affecting other material locations.
- Minor rerouting of piping or ducts.
- Clarifications that resolve missing or conflicting information on the original approved plans, without changing the design intent or causing a code violation.

What if airflows are changed to compliant?

Material Alterations

- Altering room air balance to a non-compliant condition.
- Relocating diffusers or registers in a room that requires specific air device location requirements (for example Airborne Infection Isolation Rooms, Operating Rooms, etc.)

ELECTRICAL

Non-Material Alterations

- Clarifications on single line drawings, without altering the original approved drawings.
- Relocating or deleting receptacles and/or switches, without causing non-conformance with the California Electrical Code (CEC).
- Modifications to original pre-approvals, proprietary or manufactured items, without changing the design intent.
- Clarifications to resolve missing or conflicting information on the original approved plans, without changing the design intent or causing a code violation.

Material Alterations

- Adding information to drawings or specifications resulting in non-compliance with Article 517, CEC.
- Modifications to original pre-approvals, proprietary, listed, labeled or manufactured items.

oshpd Office of Statewide Health Planning and Development

Hospital Building Safety Board
400 R Street, Suite 200
Sacramento, California 95811-6213
(916) 440-8453
Fax (916) 324-9118
http://www.oshpd.ca.gov/Boards/HBSB/index.html

HOSPITAL BUILDING SAFETY BOARD
Administrative Processes and Code Changes Committee

Thursday, January 30, 2014
10:00 a.m. - 4:00 p.m.

Office of Statewide Health Planning and Development
400 R Street, Suite 452
Sacramento, CA 95811
(916) 440-8453

and

Metropolitan Water District Headquarters
700 N. Alameda Street, Suite 2-546
Los Angeles, CA 90012
(213) 897-0166

Committee Members Present
Scott Karpinen, Chair
John Donelan, Vice-Chair
Enid Eck
John Egan
Bruce Macpherson
Carl Scheuerman

HBSB Staff
Cathy Kane
Evett Torres
Kathy Zamora

OSHPD Staff
Paul Coleman, FDD Deputy Director
Dave Castillo
Gary Dunger
Glenn Gall
Eric Jacobsen
Ramin Sadr
Elizabeth Wied

"Access to Safe, Quality Healthcare Environments that Meet California's Diverse and Dynamic Needs"

1. Welcome and Introductions

Committee Chair Scott Karpinen opened the meeting, which would be held for informational purposes only in the absence of a quorum. The participants introduced themselves.

2. Review Committee Goals for 2014

Hospice regulations. Mr. Gall explained that there had been a change to the statutory legislation – the Office of the State Fire Marshall (SFM) was now in front of OSHPD in terms of who was going to develop the regulations. Mr. Coleman noted that the revised statute said that OSHPD would work in consultation with SFM.

PINs and CANs. Mr. Karpinen explained that these were ongoing – the committee has always been involved with them to assist OSHPD.

OSHPD fee structure ($250 Amended Construction Document fee). Mr. Karpinen stated that several of the hospitals had issues with the fee structure; they wanted the committee to evaluate whether the fees could be reduced or eliminated. Mr. Coleman stated that the statute provides for a separate application fee from the Plan Review fee. Secondly, the fees have raised awareness for owners and representatives of how many ACDs hospitals have.

eSP enhancements and functionality. Mr. Karpinen stated that the architectural people wanted to take it a step further and would like to make modifications for people out in the field. Mr. Scheuerman said that he had understood that the committee would

continue to support eSP as it evolves in its functionality as an administrative process. Mr. Coleman stated that this committee would deal with the business processes side, as there is a new Technology Advances Committee.

New code updates/preparation for 2016 codes; address addendum code issues; align California codes with national standards. Mr. Karpinen stated that this was a continuing process that this committee has always done. Mr. Gall noted that the next cycle process begins 18 months from December; it will be triennial so we will be looking at the model code base as well.

Materially alter – especially structural. Mr. Karpinen stated that the committee would examine whether to tweak the current system to make it even more user-friendly in the field.

OSHPD-3SE. Mr. Karpinen stated that there is much interest in starting OSHPD-3SE again – working with the unions to ensure more jobs, creating safe environments, and enabling the hospitals to provide these services. Mr. Coleman stated that Mr. Gall's staff was working on an RFP to solicit proposals for an initial study of those regulations.

Discussion and Public Input

An Interested Party sought a definition for *construction cost* relating to allowances and contingencies. Mr. Coleman recommended looking at the definition of *construction cost* in the code. Often there is an estimated cost at the time of the project, then a construction cost at the time the building permit is obtained, and lastly a final cost when

the project is finished. The statute and regulations cover how OSHPD deals with those fees.

3. Report on Code Update Process

- Status of Code Cycle

Mr. Gall gave the dates for the Code Advisory Committee meetings for the current cycle, called "The 2013 Intervening Code Cycle." All of the regulations will go through this process. Mr. Gall gave highlights of the many maintenance items.

  - General maintenance in the OSHPD 1 requirements in Section 1224.
  - OSHPD 2 – Skilled Nursing Facilities (SNFs) – they have produced some language in response to a statutorily-mandated pilot program for Small House SNFs. Mr. Gall's group is awaiting the final broadcast information from the California Department of Public Health.
  - Maintenance for OSHPD 4 requirements – the correctional treatment centers.
  - The initial source of revisions regarding interventional radiology. In the quest to stay ahead and focus on national standards, the Facility Guidelines Institute (FGI) has finally put into the book some extensive requirements relative to interventional radiology.

Mr. Gall will be looking to this committee for input relative to things like interventional radiology and hybrid operating rooms for requirements going forward. There is also the basis of the National Standards where they can look for guidance.

Mr. Gall demonstrated to everyone that all codes are now accessible online at the California Building Standards Code website. The chapters are downloadable so they can be sent to a local device – convenient for those having a need to look at some parts of the code more often than others. This information will typically be more current and accurate because it is maintained by the Building Standards Commission (BSC). The links are posted on the OSHPD website.

Mr. Donelan asked if there were any similar provisions, as the state of California has many amendments and a couple of the National Fire Protection Association (NFPA) standards. Were there cost-free sources for those as well? Mr. Gall replied that there were and OSHPD will be posting them. All the publishers have had to make them available without charge; the way the law came down, they need to be available online. NFPA maintains a website that provides free access to not only the current NFPA documents but also to prior editions.

Mr. Gall added that typically you cannot print the code, but you have online access at no cost. To get to a document you need in print, you must purchase the code. However, these days most people find access to electronic codes readily usable.

Mr. Gall continued to explain code updates.

- Most major changes in OSHPD's book happened in OSHPD 3. The intent was to make it much easier for both designers and code plan reviewers to achieve compliance by presenting the code in the new format. Those using it in local jurisdictions say the changes are effective and much easier to use.

- OSHPD has trained all four offices of the L.A. City Building Department.
- Every time that OSHPD has CANs, they try to incorporate the Materially Alter language into the code. The many black line changes in Part 1 are the result of incorporating CANs into the code, so that everyone can see how OSHPD checks relative to language that is there.
- OSHPD has finally covered work without permits – a major change. There are extensive changes in Part 1 of Title 24, Administrative Regulations Chapter 7, that deal with this issue.
- The Material Alterations CAN was also incorporated into Part 1.
- The Procedure for Expedited Appeals is now in Title 24 Part 1.
- There is new structural language in the book, giving more definition to some of the items. Other changes are responses to changes that occurred in the model codes.
- Mr. Coleman noted that the CAN on Removal of Acute Care Services has now been brought into the Building Standards, so the CAN has become obsolete.
- Mr. Gall continued that OSHPD now has a requirement for submittal of a functional program. It was based on national standards. Its use is to lay out the project for OSHPD reviewers for licensing, and also for the client going through a project submittal.
- OSHPD is typically behind the curve when it comes to health care facility requirements, because it takes so long to get them into the code. The industry leads our code. Mr. Gall's hope for what a functional program can do is to better match the requirements that OSHPD comes up with, to what the facility is trying to achieve in its project.

- OSHPD is trying to utilize some of the planning functions that facilities currently undergo to be folded into the functional program that OSHPD is requesting with submittal of projects.
- During the last cycle, OSHPD came out with the PIN for Collaborative Review. Mr. Coleman noted that the PIN covers Phased Plan Review as well (which is performed as the standard 1.64% fee). The PIN illustrates the differences between the two levels of review, and the expectations for both the client and OSHPD.
- PINs and CANs that are forthcoming include:
    - The Functional Program CAN. The CAN for Accessibility will be re-issued based on the new code – the DSA overhauled Chapter 11B and hung all the California language onto the 2010 federal Americans with Disabilities Act (ADA) standards. They produced a help document (available on their website) that is not as helpful as the prior one relative to code.

      There are still some questions as to how this applies to health facilities under OSHPD jurisdiction. DSA's intent was to put California standards into the context of ADA language. The entire chapter has a different structure – the idea of occupancy group has gone away. It is a matter of usability of a facility for all.
    - The possibility of double jeopardy under both California code and ADA is now lessened because of the formatting, and because the California language is placed correctly within the federal language.

- OSHPD started with CAN 11B and looked at gray areas, and explained how it sees the code apply to those areas.
- A new CAN is for Temporary Systems Utilities and Equipment.
- A CAN currently en route for the Technical Leads in the office is the Remodel CAN, still extremely useful.
- A new Jurisdiction CAN is based on the 2010 code. It will probably be converted to a standing CAN, similar to CAN 1. The reason is that jurisdiction doesn't change but remains constant. Feedback has been exceptionally positive, particularly with local jurisdictions because of the increased clarity for them.

Discussion and Public Input

Mr. Scheuerman stated that because he is a member of the Health Facility Advisory Committee at the BSC, he has also been selected to serve on the Ad Hoc Committee. He welcomed any input or concerns from the Administrative Processes and Code Changes Committee that he could pass on.

Mr. Scheuerman asked about Senate Bill 294, which requires new operational standards for pharmaceutical compounding. There will inevitably be a compounding room building standard requirement associated with it. Mr. Scheuerman asked if OSHPD has been invited to the table for input, and whether OSHPD has a view of the implementation of this.

Mr. Gall responded that he had attended a Green Building meeting at BSC. Consumer Affairs has not submitted anything for the current Building Code cycle on the pharmacy standards. OSHPD will keep an eye on what they are doing, as well as on the regs that the Division of Pharmacy is penning to ensure that they do not become too prescriptive.

Mr. Coleman mentioned that OSHPD is considering a new PIN concerning re-opening closed projects. Although contrary to legislation and regulation, there have been many requests to re-open closed projects.

He also mentioned that OSHPD is looking at existing patient rooms being converted to different types of patient rooms. At what point do they need to be brought up to current code regarding room size, handwash fixtures, etc.?

Mr. Coleman stated that most of the Reminder List has been updated to the 2013 code. Mr. Gall added that staff had found checklists from the state of Massachusetts that are helpful for planning a project and answering compliance questions; the staff adapted them for California use and hopes to get them posted.

Mr. Macpherson asked how many projects availed themselves of the Small House SNF pilot programs. Mr. Gall knew of one in Southern California that had been difficult – they were trying to build a greenhouse which had its own shortcomings relative to California licensure requirements. OSHPD couldn't persuade them to use their draft regulations. He hopes to see more projects as money starts to loosen up for construction in general.

Regarding OSHPD 3SE, Mr. Gall answered a question from Mr. Karpinen: OSHPD has posted an Errata or Addendum to the Plumbing Code. He continued that hopefully, everyone is getting their Errata and updates, because the publication of the code is never perfect. There have been multiple errata and supplements already to the 2013 code. For example, Article 517.123 (Nurse Call System Requirements) in the Electrical Code was initially published incorrectly. The July 1 Supplement of the 2010 Electrical Code contains the correct printing of that article.

4. Discussion on 2013 CPC Definition for "Handwashing Fixtures"

Mr. Karpinen talked about two items that contained differences between the 2010 and 2013 Codes.

- He explained additions to the verbiage for 210.0.
- He explained the gooseneck faucet issue. Ms. Eck described why one design was cleaner than the other.
- The committee discussed spout design and faucet-mounted versus deck-mounted temperature controls.
- Mr. Gall pointed out that the Mayo Clinic study advised against sensor-operated fixtures, but OSHPD finds that position too extreme. OSHPD has also been talking to the Infection Control people at UC. They have concern that OSHPD is allowing sensor-operated fixtures and don't have a valid alternative for the more sensitive areas of the facility where hands-free operation is required.
- Mr. Gall noted that industry has no definition of *gooseneck*.

Discussion and public input

Ms. Eck asked about the rationale for not wanting the temperature adjustment on the spigot. Mr. Gall replied that it is the nooks and crannies – the difficulty of cleaning.

Ms. Eck stressed that there is a need in clinical practice to be able to adjust the temperature. Mr. Gall described a new deck-mounted temperature setting control that is also sensor-operated next to the gooseneck, that would meet the deck-mounted requirement for that particular element.

Ms. Eck emphasized that the code needs to be clear on expectations in terms of complete water flow-through; a small handle for temperature adjustment is a minor issue compared to water pooling on the inside of a fixture, enabling microbes to grow.

Mr. Karpinen observed that this issue applies not only to electronics, but also to wrist blade faucet handles or any other spouts – it is an industry-wide issue. Ms. Eck recommended identifying minimal requirements around the flow regulator and its design within the water flow, to assure that there are no small pools of water that never get changed out.

Mr. Karpinen drew the group's attention to the old code definition of a water fixture: it was hands-free. Mr. Karpinen asked for clarification on the new code definition; Mr. Gall referred him to the Notes and Errata for the problematic Table 4-2.

5. Discussion on "Materially Alter" Code Application Notice

Mr. Karpinen stated that the insertion of Materially Alter from a CAN to the code stemmed from committee feedback on numerous Change Orders issued out in the field. Much of the field staff will do it as an ASI – they don't see it as Materially Alter – then it can go through quickly.

Mr. Karpinen hoped to give Design Structural Engineers some leeway in the area of minor structural changes, to lessen Change Order paperwork and avoid the $250 fee for hospitals.

He also addressed leeway for fire protection: additions to sprinkler systems that change the hydraulic calculations, substitutions of equivalent listed fire protection products that offer support or bracing for performance, etc.

Mr. Dunger emphasized that the allowable changes, additions, and substitutions must be clear in code.

Mr. Coleman said that clarification of interpretation of the drawings – for example, an incorrect model number – is the design professional's responsibility. However, if in fact it is an equipment substitution, then it is incumbent on the designer to show that the substitution does not alter the design intent and so forth. This could possibly be done as an ASI, depending on the change.

Mr. Coleman continued that for hydraulic calculations, field staff will have to discern the time it will take. If the time required is considerable, the staff will have to submit it for

review. For substitutions, considering the load can be problematic: less load might make it insufficient. There are many gray areas, and OSHPD tried to make the code as flexible as possible. It is a work in progress. OSHPD needs to continue to train the field staff so they understand the flexibility provided for them.

Ms. Wied added that if the design professionals would like the extra flexibility, their job is to make it easy for the field staff to say that they agree. Mr. Coleman noted that enough information should be provided that the field staff can reach a decision fairly rapidly.

He requested the committee to give examples of cases where the change was not substantial, to be used for OSHPD training.

6. Comments from the Public/Board Members on Issues Not on This Agenda

Mr. Coleman stated that retired annuitant John Gillengerten is leaving OSHPD.

Mr. Gall stated that OSHPD had received an update from Abdul Acheckzai on the American Society of Heating, Refrigerating and Air Conditioning Engineers (ASHRAE) meeting. Mr. Gall sought to have him give a presentation for the committee.

Mr. Gall stated that Travis English had presented a number of items at the ASHRAE committee meeting. The discussion that takes place at those meetings on code-making would be very valuable for this committee to hear; Mr. English would be a valuable speaker.

11. Adjournment

Mr. Scheuerman noted that the committee now had a quorum.

MOTION: (M/S/C/) [Scheuerman/Coleman]

The Board voted unanimously to adjourn at 12:05 p.m.

oshpd Office of Statewide Health Planning and Development

Hospital Building Safety Board
400 R Street, Suite 200
Sacramento, California 95811-6213
(916) 440-8453
Fax (916) 324-9118
http://www.oshpd.ca.gov/Boards/HBSB/index.html

6/9/14

HOSPITAL BUILDING SAFETY BOARD
Administrative Processes and Code Changes Committee

MEETING NOTICE
Thursday, June 26, 2014
10:00 a.m. — 4:00 p.m.

at the
Office of Statewide Health Planning and Development
400 R Street, Suite 452
Sacramento, CA 95811
(916) 440-8453

And, at the
Metropolitan Water District Headquarters
700 N. Alameda Street, Suite 2-500
Los Angeles, CA 90012
(213) 897-0166

Board Members: Scott Karpinen, Chair; John Donelan, Vice-Chair; Enid Eck; Rami Elhassan; Henry Huang; Bruce Macpherson; Carl Scheuerman

Consulting Member: Michael Gritters

OSHPD Staff: Gary Dunger; Glenn Gall; Ramin Sadr

HBSB Staff: Linda Janssen, Executive Director; Cathy Kane; Evett Torres

MEETING AGENDA

NOTE: Agenda order is tentative and subject to change without prior notice. All times are approximate and subject to change. A 30-minute to one-hour lunch will be taken sometime during the day.

1. **Welcome and Introductions**

2. **Review Policy Intent Notice for Testing Laboratories**
   - Discussion and public input

3. **Review Standard Operating Procedure and Reporting Form for Inspector of Record Performance Observation**
   - Discussion and public input

4. **Discuss "Financial Capacity" Policy Intent Notice/Code Application Notice that Provides Direction to Hospitals who Applied for Relief under Senate Bill 90**
   - Discussion and public input

5. **Comments from the Public/Board Members on Issues not on this Agenda:**

- The Board will receive comments from the public/members at this time on matters not on the agenda. Matters raised at this time will be taken under consideration for placement on a subsequent agenda.

6. **Adjournment**

REMINDER: Please call (916) 440-8453 on Wednesday, June 25th after 3:00 p.m. to confirm that the meeting will be taking place as scheduled. The recording will verify the meeting date and location.

NOTE: Meeting facilities and restrooms are accessible to the physically disabled. If any special accommodations (assistive listening device, sign language interpreter, etc.) are needed, please contact Board Staff at (916) 440-8453. Requests should be made as soon as possible but no later than 10 business days prior to the meeting.

Parking:
Sacramento—There are garages at 500 R Street and CalPERS Plaza. CalPERS Plaza has two entrances: one on Fifth Street, north of R Street, which charges $2./hour or $8/day; and another on Q Street, between Fourth and Fifth Streets, which charges $2.50/hour or $12/day. There are also 10-hour parking meters around the perimeter of the building.

Los Angeles—There is valet service at the Metropolitan Water District Building that is available 8 am to 5 pm and they charge between $6 and $14. There is also Five Star Parking lot on Cesar Chavez Avenue and Alameda Street that charge $14/day or $2.00 every 20 minutes.

Questions? Call Board Staff at the above phone number.

Facilities Development Division
Office of Statewide Health Planning and Development
400 R Street, Suite 200 • Sacramento, CA 95811 • (916) 440-8300
700 N. Alameda Street, Suite 2-500 • Los Angeles, CA 90012 • (213) 897-0166

POLICY INTENT NOTICE (PIN)

SUBJECT

Approved Testing Agency/Laboratory for Structural Tests

PIN: 58

Effective: TBD

PURPOSE

2013 California Building Code (CBC) Section 1703A.4 requires that test reports based on tests conducted by **approved testing agency** (ies) in accordance with **appropriate reference standards** be provided for the building official to determine that construction materials meet the applicable code requirements. CBC Chapter 35 adopts International Standards Organization (ISO) Accreditation Standard 17025 (ISO 17025) as one of the reference standards for accreditation of the laboratories (labs). Therefore, an Approved Testing Agency is any laboratory (lab) or testing agency (the words lab and testing agency are used interchangeably in this PIN) accredited under the ISO 17025 for specific tests listed in the scope of the accreditation.

CBC Section 1704A.2.1 permits registered design professionals to act as an approved agency and their personnel are permitted to act as special inspectors, provided they qualify as special inspectors. Special inspectors often perform field tests and provide test reports for tests normally not performed by labs (e. g. Concrete/Masonry post-installed anchor bolt tests, pile tests, structural sealant glazing tests, steel non-destructive tests, masonry core tests, material tests for seismic compliance verification, etc.).

CBC Section 1705A.12.4 requires that all tests for special seismic certification be performed by an independent lab having accreditation to ISO 17025 or shall be under the responsible charge of an independent California licensed engineer. Test reports are required to be reviewed and accepted by an independent California licensed structural engineer.

California Health and Safety Code (H&SC) Section 129805 and 2013 California Administrative Code (CAC) Section 7-141 requires that administration of the work of construction shall be under the responsible charge of the architect and structural engineer.

CAC Section 7-149 requires that the architect or engineer in responsible charge to establish and administer the testing program.

Some labs are ISO 17025 accredited for specific tests, hence they are approved by OSHPD. Most of the tests that are performed in field, in general, are not in the scope of lab's ISO 17025 accreditation. Some health facility owners and manufacturers perform tests in their own labs under the responsible charge of a California licensed engineer. Some labs are accredited to standards that are often the derivatives of and equivalent to ISO 17025 and would like to be considered as approved.

This Policy Intent Notice (PIN) provides a summary of the processes and procedures for the OSHPD acceptance of test reports and testing labs to be considered as approved.

BACKGROUND

ISO/IEC 17025 is the standard adopted in the CBC for establishing an approved testing agency for all tests:

- *ISO/IEC 17025: General requirements for competence of testing and calibration laboratories.*

Some Construction Materials Testing (CMT) labs accredited to NISTIR 7012 or AASHTO R18, which are accreditation standards for CMT labs equivalent to ISO 17025, would like to be considered as approved testing agencies by OSHPD:

- *NISTIR 7012: Technical requirements for construction materials testing.*
- *AASHTO R18: Standard Recommended Practice for Establishing and Implementing a Quality System for Construction Materials Testing Laboratories.*

As an option, a laboratory may also obtain accreditation for one or more of the following construction materials engineering standards:

- *ASTM E329: Specification for Agencies Engaged in the Testing and/or Inspection of Materials Used in Construction.*
- *ASTM C1077: Practice for Laboratories Testing Concrete and Concrete Aggregates for Use in Construction and Criteria for Laboratory Evaluation.*
- *ASTM D3666: Specification for Minimum Requirements for Agencies Testing and Inspecting Bituminous Paving Materials.*
- *ASTM D3740: Practice for Evaluation of Agencies Engaged in Testing and/or Inspection of Soils and Rock as Used in Engineering Design and Construction.*
- *ASTM C1093: Practice for Accreditation of Testing Agencies for Unit Masonry.*
- *ASTM E1212: Practice for Quality Management Systems for Nondestructive Testing (NDT) Agencies.*
- *ASTM E543: Specification for Agencies Performing Nondestructive Testing (NDT).*

Accreditation may be for one or more tests in each area. Either a comprehensive accreditation to ISO/IEC 17025, AASHTO R18 or NISTIR 7012 can be obtained that may include accreditation to the individual engineering quality standards or individual accreditation to the engineering quality standards ASTM E329, ASTM C1077, ASTM D3666, ASTM D3740, ASTM C1093, ASTM E1212 and ASTM E543 can be obtained from an accreditation body.

ISO 17025 requires that accreditation bodies be qualified to ISO 17011:

- *ISO 17011: Conformity assessments – General requirements for accreditation bodies* accrediting conformity assessment bodies.

DRAFT

In general, OSHPD accepts evaluation/listing by various organizations such as the International Code Council-Evaluation service (ICC-ES), International Association of Plumbing and Mechanical Officials-Evaluation Service (IAPMO-ES), Factory Mutual Approvals (FM Approvals), Underwriters Laboratory Listings (UL listing), etc., when associated acceptance criteria are adopted in the 2013 California Building Standards Code (CBSC). All of these organizations require that testing be performed in labs accredited to ISO 17025 or equivalent.

OSHPD often receives requests to consider test reports from foreign labs that are accredited by an accreditation body that is a signatory to the International Laboratory Accreditation Cooperation (ILAC) Mutual Recognition Arrangement (MRA).

In addition, OSHPD is often asked whether OSHPD accepts labs approved under the California Division of State Architect (DSA) Laboratory Evaluation and Acceptance (LEA) program.

To address questions about **appropriate reference standards** for **approved testing agency or Lab**, this policy intent notice has compiled the various requirements in the CBC and current OSHPD practice into this single resource document. This PIN will also create OSHPD Preapproved Laboratory (OPL) program for testing agencies/labs.

DRAFT

POLICY

1. All tests shall be performed by an **independent approved testing agency**/laboratory (Lab) or shall be under the responsible charge of an independent California licensed engineer in accordance with CBC Sections 1703A.4, 1704A.2.1, 1705A.12.4 and CAC Sections 7-141 & 7-149. Test reports shall be signed by lab's authorized representative or engineer in charge.

2. When testing is performed under the responsible charge of an independent California licensed engineer, and not in a lab accredited under ISO 17025 or equivalent, engineer shall have qualification and experience for specific tests, as determined by the Office. Calibration requirements for such tests shall meet the applicable test standards and ISO 17025 Section 5.6.1.

3. Test reports are required to be reviewed and accepted by an independent California licensed structural engineer in accordance with CBC Sections 1703A.2, 1703A.4, 1704A.2.4, 1705A.12.4 and CAC Sections 7-141 & 7-149.

4. For a testing agency/laboratory to be considered **independent**, it should be able to demonstrate that it is impartial and that it and its personnel are free from any undue commercial, financial and other pressures which might influence their technical judgment in accordance with ISO 17025 Section 4.1.4. The independent testing agency/laboratory should not engage in any activities that may endanger

the trust in its independence of judgment and integrity in relation to its testing or calibration activities.

5. All laboratories accredited in accordance with ISO 17025 are considered to be **approved testing agencies** or labs for the tests in the scope of accreditation in accordance with CBC Section 1703A.4 and Chapter 35.

6. Construction Material Testing (CMT) laboratories accredited using any one of the following standards, which are equivalent to (and often are derivatives of) ISO 17025, in addition to or in-lieu of accreditation to ISO 17025 shall be considered **approved testing agencies** or labs for the scope of testing for which they are accredited.

   - NISTIR 7012: Technical requirements for construction materials testing.
   - AASHTO R18: Standard Recommended Practice for Establishing and Implementing a Quality System for Construction Materials Testing Laboratories.
   - ASTM E329: Specification for Agencies Engaged in the Testing and/or Inspection of Materials Used in Construction.
   - ASTM C1077: Practice for Laboratories Testing Concrete and Concrete Aggregates for Use in Construction and Criteria for Laboratory Evaluation.
   - ASTM D3666: Specification for Minimum Requirements for Agencies Testing and Inspecting Bituminous Paving Materials.
   - ASTM D3740: Practice for Evaluation of Agencies Engaged in Testing and/or Inspection of Soils and Rock as Used in Engineering Design and Construction.
   - ASTM C1093: Practice for Accreditation of Testing Agencies for Unit Masonry.
   - ASTM E1212: Practice for Quality Management Systems for *Nondestructive Testing (NDT)* Agencies.
   - ASTM E543: Specification for Agencies Performing *Nondestructive Testing (NDT).*

7. An approved testing agency/lab shall be objective, competent and independent from the contractor responsible for the work being inspected. The agency shall also disclose possible conflicts of interest so that objectivity can be confirmed as required by the CBC Section 1703A.1.1.

8. Laboratory accreditation bodies shall conform to ISO 17011, as required by ISO 17025. The scope of the laboratory's accreditation shall include the specific type of testing covered in the test report. The laboratory's accreditation certificate shall be provided to OSHPD to show that the laboratory is accredited for the testing reported.

9. Labs accredited (for the tests to be performed) by the following accreditation bodies **or other accreditation bodies** that are signatory to the International Laboratory Accreditation Cooperation (ILAC) Mutual Recognition Arrangement (MRA) are acceptable:

DRAFT

- Laboratory Accreditation Bureau (LAB).

http://www.l-a-b.com/content/directory-accredited-labs

- International Accreditation Service (IAS).

http://www.iasonline.org/Testing_Laboratories/TL.html

- AASHTO Accreditation Program (AAP).

http://www.amrl.net/amrlsitefinity/default/aap/r18labs.aspx

- American Association for Laboratory Accreditation (A2LA).

https://www.a2la.org/dirsearchnew/newsearch.cfm

- National Voluntary Laboratory Accreditation Program (NVLAP).

http://ts.nist.gov/standards/scopes/programs.htm

- Construction Materials Engineering Council (CMEC).

https://search.cmec.org/fmi/webd/#CMEC&lay=IWP%20Start%20Page&viewstyle=form&record=1&mode=browse

10. Tests performed in a foreign lab with accreditation in accordance with ISO 17025 (for the tests to be performed) by an accreditation body that is a signatory to the International Laboratory Accreditation Cooperation (ILAC) Mutual Recognition Arrangement (MRA) are acceptable. Test reports shall be available in English and shall conform to the CBSC and applicable test standards. Test reports shall be reviewed and accepted by an independent California licensed structural engineer.

11. California Division of State Architect (DSA) Laboratory Evaluation and Acceptance (LEA) program's approval of laboratory is primarily based on ASTM E329/AASHTO accreditation of labs. As such testing labs in DSA-LEA program, in general, satisfy the accreditation requirements in the CBC. Hence labs approved under the DSA-LEA program are considered approved labs for OSHPD for the scope of tests listed there in.

    https://www.apps.dgs.ca.gov/tracker/ApprovedLabs.aspx

12. Testing at the owner's or manufacturer's facility will be accepted if it is performed under the responsible charge of an independent California licensed engineer, not permanently employed by the owner/manufacturer, who shall witness the test and sign the report. Reports witnessed and signed by an independent California licensed engineer shall be reviewed and accepted by an independent California licensed structural engineer in accordance with CAC Sections 7-141 & 7-149.

DRAFT

13. When a Testing Agency/Lab subcontracts tests and calibrations to other testing labs, those testing labs shall also be subjected to the same accreditation requirements as the approved Testing Agency/Lab as required by ISO 17025 Section 4.5

14. The testing laboratory shall have the testing apparatus and equipment capacity necessary to perform the tests in accordance with the applicable test standards in accordance with CBC Section 1703A.1.2 and ISO 17025 Section 5.5.

15. Sampling and evaluation of tests required by approved construction documents, CBSC or its reference standards shall be in accordance with applicable test standards for specific tests. Sampling and evaluation of test results shall be in accordance with ASCE 7-10 Section 1.3, when not addressed otherwise in the CBSC or its referenced test standards. Test results shall include a description or pictures of the failure mode(s) for each test specimen. The reports shall state definitely whether the material tested complies with the approved construction documents in accordance with CAC Section 7-149.

16. Written evidence verifying independence and approval of testing agency or lab shall be submitted to OSHPD along with Testing, Inspection, and Observation (TIO) program required by CAC Section 7-141 and CBC Section 1703A.1.1. The architect or engineer in responsible charge shall verify that approved agency is independent and acceptable as required by CAC Section 7-141(d).

    Alternatively, Testing Agencies/Labs can apply for pre-approval under the OSHPD Preapproved Laboratory (OPL) program based on their accreditation or DSA-LEA approval as follows:

    a. Laboratories approved under the DSA-LEA program can submit a completed application in word format (with signature embedded) along with:
        i. $250.00 new application fee or renewal fee.
        ii. DSA-LEA approval must be current and shall have one-to-one correspondence for test scope to be approved.

    b. Laboratories accredited by accreditation bodies (qualified under ISO 17011) can submit a completed application in word format (with signature embedded) along with:
        i. $500.00 new application fee or $250.00 renewal fee.
        ii. Accreditation shall be based on one or more of the standards listed in Item # 6 above.
        iii. Accreditation must be current and shall have one-to-one correspondence for test scope to be approved.

    c. All fees submitted shall be non-refundable.
    d. Approval shall be valid for up to six years, but not exceeding the approval expiration date by DSA-LEA or accreditation bodies, as applicable.
    e. All submittal shall be electronic (e-mail or equivalent).

DRAFT

f. List of OSHPD pre-approved labs will be posted at OSHPD website.
g. Any adverse action or removal of tests by accreditation bodies or DSA-LEA shall be a cause for removal of labs or tests from the OPL program. In addition, detection of potential anomalies by a lab or change of primary lab personnel that may impact health and safety of OSHPD regulated facilities shall be a cause for removal from OPL program.

Paul Coleman Date

DRAFT

Appendix A – Code Sections

California Health and Safety Code (HS & C)
Alfred E. Alquist Hospital Facilities Seismic Safety Act of 1983 (HSSA 83)

§129805. Preparation of plans and specifications; oversight by architect or engineer; administration of construction work; exempt projects

(a) All plans and specifications shall be prepared under the responsible charge of an architect or a structural engineer, or both. A structural engineer shall prepare the structural design and shall sign plans and specifications related thereto. Administration of the work of construction shall be under the responsible charge of the architect **and** structural engineer, except that where plans and specifications for alterations or repairs do not affect architectural or structural conditions, the plans and specifications may be prepared under the responsible charge of, and work of construction may be administered by, a professional engineer duly qualified to perform the services and holding a valid certificate under Chapter 7 (commencing with Section 6700) of Division 3 of the Business and Professions Code for performance of services in that branch of engineering in which the plans, specifications, and estimates and work of construction are applicable.

THE CALIFORNIA ADMINISTRATIVE CODE, 2013

ARTICLE 4
CONSTRUCTION

…

7-141. Administration of Construction.

(a) The administration of the work of construction shall be under the responsible charge of an architect or structural engineer. Where neither structural nor architectural elements are substantially involved, a mechanical or electrical engineer registered in the branch of engineering most applicable to the project may be in responsible charge of the administration of the work of construction.

…

(d) The architect or engineer in responsible charge of the work shall prepare a testing, inspection and observation program which shall be submitted to the Office for approval prior to the issuance of the building permit.

(e) The testing program shall identify materials and tests to be performed on the project. The firm(s) and/or individual(s) to perform each of the required tests shall also be identified. The testing program shall include, at a minimum, those tests required by applicable sections of the California Building Standards Code.

DRAFT

...

7-149. Tests.

(a) Pursuant to Section 7-141, the architect or engineer in responsible charge shall establish and administer the testing program. Where job conditions warrant, the architect or engineer may waive certain specified tests contingent upon the approval of the Office. The Office shall be notified as to the disposition of materials noted on laboratory reports. One copy of all test reports shall be forwarded to the Office by the testing agency. The reports shall state definitely whether the material tested complies with the approved contract documents.

(b) The governing board or authority of a health facility shall select a qualified person or testing laboratory as the testing agency to conduct the tests. The selected person or testing laboratory must be approved by the architect or engineer in responsible charge. The governing board or authority shall pay for all tests.

...

7-151. Verified Compliance Reports.

(a) In accordance with Section 7-151(e), or when required by the Office, the architect(s), engineer(s), inspector(s) of record, special inspector(s) and contractor or owner/builder shall each submit to the Office a verified compliance report, with their signature and based on their own personal knowledge, as defined by this section. The report shall:

1. Verify that the work during the period, or a portion of the work, covered by the report has been performed and materials used and installed are in accordance with the approved construction documents.

2. Set forth detailed statements of fact as are required by the Office.

(b) The term "personal knowledge," as used in this section and as applied to the licensed architect or engineer or both, means personal knowledge that is obtained by periodic visits to the project site, of reasonable frequency, for the purpose of general observation of the work. It also includes knowledge that is obtained from the reporting of others as to the progress of the work, testing of materials, and inspection and supervision of the work that is performed between the periodic visits of the architect or the engineer. Reasonable diligence shall be exercised in obtaining the facts.

...

(e) Verified compliance reports shall be submitted to the Office at the intervals or stages of the work as stated in the approved testing, inspection and observation program. In no case, shall the submittal of verified compliance reports be less than:

1. One copy prepared and signed by each required participant or discipline at the completion of the work.

2. One copy prepared and signed by any participant or discipline at any time a special verified compliance report is required by the Office.

DRAFT

(f). The architect or engineer in responsible charge of the work shall be responsible for ensuring all required verified compliance reports are submitted to the Office.

…

THE CALIFORNIA BUILDING CODE, 2013

CHAPTER 2
DEFINITIONS

…

SECTION 202 - DEFINITIONS

…

APPROVED AGENCY. An established and recognized agency regularly engaged in conducting tests or furnishing inspection services, when such agency has been *approved*.

…

CHAPTER 17*A*
SPECIAL INSPECTIONS AND TESTS

…

SECTION 1701A - GENERAL

…

1701A.4 Special inspectors. [OSHPD 1 and 4] In addition to the inspector(s) of record required by the California Administrative Code (CCR, Title 24, Part 1), Section 7-144, the owner shall employ one or more special inspectors who shall provide inspections during construction on the types of work listed under Chapters 17A, I8A, 19A, 20, 21A, 22A, 23, 25, 34A, and noted in the Test, Inspection, and Observation (TIO) program required by Sections 7-141, 7-145 and 7-149, of the California Administrative Code. Test, Inspection and Observation (TIO) program shall satisfy requirements of Sections 1704A.2.3 and 1704A.5.

SECTION 1703A - APPROVALS

…

1703A.1.1 Independence. An approved agency shall be objective, competent and independent from the contractor responsible for the work being inspected. The agency shall also disclose possible conflicts of interest so that objectivity can be confirmed.

1703A.1.2 Equipment. An approved agency shall have adequate equipment to perform required tests. The equipment shall be periodically calibrated.

DRAFT

1703A.1.3 Personnel. An approved agency shall employ experienced personnel educated in conducting, supervising and evaluating tests and/or inspections.

1703A.2 Written approval. Any material, appliance, equipment, system or method of construction meeting the requirements of this code shall be approved in writing after satisfactory completion of the required tests and submission of required test reports.

…

1703A.4 Performance. Specific information consisting of test reports conducted by an approved testing agency in accordance with the appropriate referenced standards, or other such information as necessary, shall be provided for the building official to determine that the material meets the applicable code requirements.

…

1704A.2.1 Special inspector qualifications. The special inspector shall provide written documentation to the building official demonstrating his or her competence and relevant experience or training. Experience or training shall be considered relevant when the documented experience or training is related in complexity to the same type of special inspection activities for projects of similar complexity and material qualities. These qualifications are in addition to qualifications specified in other sections of this code.

The registered design professional in responsible charge and engineers of record involved in the design of the project are permitted to act as the approved agency and their personnel are permitted to act as the special inspector for the work designed by them, provided they qualify as special inspectors.

…

1705A.12.4 Special seismic certification.

…

All tests shall be performed by an independent laboratory having accreditation to the International Standards Organization (ISO) accreditation standard 17025 or shall be under the responsible charge of an independent California licensed engineer. Test reports shall be reviewed and accepted by an independent California licensed structural engineer.

…

CHAPTER 35
REFERENCED STANDARDS

…

DRAFT

ISO	International Organization for Standardization ISO Central Secretariat 1 ch, de la Voie-Creuse, Case Postale 56 CH-1211 Geneva 20, Switzerland	
Standard reference number	Title	Referenced in code section number
. . .		
ISO 17025-05	General requirement for competence of testing and calibration laboratories.	1705A.12.4

…

ASCE STANDARD ASCE/SEI 7-10

American Society of Civil Engineers
Minimum Design Loads for Buildings and Other Structures

…

1.3 BASIC REQUIREMENTS

…

1.3.1.3.2 Testing. Testing used to substantiate the performance capability of structural and nonstructural components and their connections under load shall accurately represent the materials, configuration, construction, loading intensity, and boundary conditions anticipated in the structure. Where an approved industry standard or practice that governs the testing of similar components exists, the test program and determination of design values from the test program shall be in accordance with those industry standards and practices. Where such standards or practices do not exist, specimens shall be constructed to a scale similar to that of the intended application unless it can be demonstrated that scale effects are not significant to the indicated performance. Evaluation of test results shall be made on the basis of the values obtained from not less than 3 tests, provided that the deviation of any value obtained from any single test does not vary from the average value for all tests by more than 15%. If such deviation from the average value for any test exceeds 15%, then additional tests shall be performed until the deviation of any test from the average value does not exceed 15% or a minimum of 6 tests have been performed. No test shall be eliminated unless a rationale for its exclusion is given. Test reports shall document the location, the time and date of the test, the characteristics of the tested specimen, the laboratory facilities, the test configuration, the applied loading and deformation under load, and the occurrence of any damage sustained by the specimen, together with the loading and deformation at which such damage occurred.

1.3.1.3.3 Documentation. The procedures used to demonstrate compliance with this section and the results of analysis and testing shall be documented in one or more reports submitted to the authority having jurisdiction and to an independent peer review.

DRAFT

…

ISO/IEC 17025: General requirements for the competence of testing and calibration laboratories

…

4.1.4 If the laboratory is part of an organization performing activities other than testing and/or calibration, the responsibilities of key personnel in the organization that have an involvement or influence on the testing and/or calibration activities of the laboratory shall be defined in order to identify potential conflicts of interest.

NOTE 1: Where a laboratory is part of a larger organization, the organizational arrangements should be such that departments having conflicting interests, such as production, commercial marketing or financing do not adversely influence the laboratory's compliance with the requirements of this International Standard.

NOTE 2: If the laboratory wishes to be recognized as a third-party laboratory, it should be able to demonstrate that it is impartial and that it and its personnel are free from any undue commercial, financial and other pressures which might influence their technical judgment. The third-party testing or calibration laboratory should not engage in any activities that may endanger the trust in its independence of judgment and integrity in relation to its testing or calibration activities.

…

4.5 Subcontracting of tests and calibrations

4.5.1 When a laboratory subcontracts work, whether because of unforeseen reasons (e.g. workload, need for further expertise or temporary incapacity) or on a continuing basis (e.g. through permanent subcontracting, agency or franchising arrangements), this work shall be placed with a competent subcontractor. A competent subcontractor is one that, for example, complies with this International Standard for the work in question.

4.5.2 The laboratory shall advise the customer of the arrangement in writing and, when appropriate, gain the approval of the customer, preferably in writing.

4.5.3 The laboratory is responsible to the customer for the subcontractor’s work, except in the case where the customer or a regulatory authority specifies which subcontractor is to be used.

4.5.4 The laboratory shall maintain a register of all subcontractors that it uses for tests and/or calibrations and a record of the evidence of compliance with this International Standard for the work in question.

…

5.5 Equipment

DRAFT

5.5.1 The laboratory shall be furnished with all items of sampling, measurement and test equipment required for the correct performance of the tests and/or calibrations (including sampling, preparation of test and/or calibration items, processing and analysis of test and/or calibration data). In those cases where the laboratory needs to use equipment outside its permanent control, it shall ensure that the requirements of this International Standard are met.

5.5.2 Equipment and its software used for testing, calibration and sampling shall be capable of achieving the accuracy required and shall comply with specifications relevant to the tests and/or calibrations concerned. Calibration programs shall be established for key quantities or values of the instruments where these properties have a significant effect on the results. Before being placed into service, equipment (including that used for sampling) shall be calibrated or checked to establish that it meets the laboratory's specification requirements and complies with the relevant standard specifications. It shall be checked and/or calibrated before use (see 5.6).

5.5.3 Equipment shall be operated by authorized personnel. Up-to-date instructions on the use and maintenance of equipment (including any relevant manuals provided by the manufacturer of the equipment) shall be readily available for use by the appropriate laboratory personnel.

5.5.4 Each item of equipment and its software used for testing and calibration and significant to the result shall, when practicable, be uniquely identified.

5.5.5 Records shall be maintained of each item of equipment and its software significant to the tests and/or calibrations performed. The records shall include at least the following:

a) the identity of the item of equipment and its software;
b) the manufacturer's name, type identification, and serial number or other unique identification;
c) checks that equipment complies with the specification (see 5.5.2);
d) the current location, where appropriate;
e) the manufacturer's instructions, if available, or reference to their location;
f) dates, results and copies of reports and certificates of all calibrations, adjustments, acceptance and the due date of next calibration;
g) the maintenance plan, where appropriate, and maintenance carried out to date;
h) any damage, malfunction, modification or repair to the equipment.

5.5.6 The laboratory shall have procedures for safe handling, transport, storage, use and planned maintenance of measuring equipment to ensure proper functioning and in order to prevent contamination or deterioration.

NOTE: Additional procedures may be necessary when measuring equipment is used outside the permanent laboratory for tests, calibrations or sampling.

5.5.7 Equipment that has been subjected to overloading or mishandling, gives suspect results, or has been shown to be defective or outside specified limits, shall be taken out of service. It shall be isolated to prevent its use or clearly labelled or marked as being out of service until it has been repaired and shown by calibration or test to perform correctly. The laboratory shall

DRAFT

examine the effect of the defect or departure from specified limits on previous tests and/or calibrations and shall institute the “Control of nonconforming work” procedure (see 4.9).

5.5.8 Whenever practicable, all equipment under the control of the laboratory and requiring calibration shall be labelled, coded or otherwise identified to indicate the status of calibration, including the date when last calibrated and the date or expiration criteria when recalibration is due.

5.5.9 When, for whatever reason, equipment goes outside the direct control of the laboratory, the laboratory shall ensure that the function and calibration status of the equipment are checked and shown to be satisfactory before the equipment is returned to service.

5.5.10 When intermediate checks are needed to maintain confidence in the calibration status of the equipment, these checks shall be carried out according to a defined procedure.

5.5.11 Where calibrations give rise to a set of correction factors, the laboratory shall have procedures to ensure that copies (e.g. in computer software) are correctly updated.

5.5.12 Test and calibration equipment, including both hardware and software, shall be safeguarded from adjustments which would invalidate the test and/or calibration results.

5.6 Measurement traceability

5.6.1 General

All equipment used for tests and/or calibrations, including equipment for subsidiary measurements (e.g. for environmental conditions) having a significant effect on the accuracy or validity of the result of the test, calibration or sampling shall be calibrated before being put into service. The laboratory shall have an established program and procedure for the calibration of its equipment.

NOTE: Such a program should include a system for selecting, using, calibrating, checking, controlling and maintaining measurement standards, reference materials used as measurement standards, and measuring and test equipment used to perform tests and calibrations.

DRAFT

Appendix B– Frequently Asked Questions

1. **Is the verified compliance report(s) in accordance with CAC Section 7-151(b) adequate for structural engineer's acceptance of test reports?**

Yes.

2. **Are the mill certs still acceptable, where <u>specifically permitted</u> by the CBSC?**

Yes. PIN did not change any specific acceptance criteria in the California Building Standards Code (CBSC).

3. **Do the requirements in the PIN apply to all engineering and architectural disciplines?**

No. PIN is limited to structural testing only.

4. **Do the requirements in the PIN apply to special inspection agencies?**

No. Scope of the PIN only covers testing agencies/labs.

DRAFT

Standard Operating Procedure

for Office Use Only

No. 14 - TBD **Effective: XXXXXXXX XX, 2014**

Use of Observation of IOR Performance of Duties Form

DRAFT

Background and Field Staff Responsibilities

The contractor is responsible for completing the work in accordance with the approved construction documents per Title 24, Part 1, Section 7-143. The Inspector of Record (IOR) shall have personal knowledge, obtained by continuous inspection of all parts of the work of construction in all stages of its progress to ensure that the work is in accordance with the approved construction documents per Section 7-145 and works under the direction of the architect/engineer to ensure the proper implementation and execution of the Testing, Inspection and Observation (TIO) program required by Section 7-141. Field Staff shall make such observation as in its judgment is necessary or proper for the enforcement of the applicable regulations and Codes per Section 7-147. Field Staff is also responsible for monitoring the duties and performance of the IOR per Section 7-213. All Field Staff duty statements, in part, include the following:

> "Monitors the work of OSHPD certified Inspectors of Record (IORs) to ensure continuous, timely, accurate and competent inspection of all phases of work in accordance with Title 24, Part 1, CCR and other inspection provisions of the California Building Standards Code. Advises IORs on code related matters and on the proper procedures for filing construction documents with the OSHPD. Monitors compliance with the approved Testing, Inspection and Observation Program. Monitors IORs Notices of Non-compliances to the contractor(s)."

An objective procedure for measuring and tracking IOR performance is essential to the mission of FDD.

Per Section 7-147 and the Field Operations Manual:

- During routine site visits Field Staff shall monitor the performance of the IOR and document all violations of Code requirements in the IOR's performance of duties (in addition to deficiencies in the construction) on Field Visit Reports as described in the Field Operations Manual.
- When the IOR is not fulfilling a Code required responsibility, Field Staff shall review the applicable Code sections, the approved construction documents, and the inspection requirements (including but not limited to the TIO program) with the IOR and discuss all violations of Code requirements with the IOR in private.
- Field Staff should encourage the IOR to improve and may suggest procedures, or other

actions, to assist the IOR in meeting minimum requirements.

- Field Staff shall increase monitoring the IOR's performance subsequent to a failure on the part of the IOR to meet the requirements to ascertain whether improvements are made.
- In the event the IOR fails to address performance concerns issued in previous Field Visit Reports the Form shall be completed and brought to the immediate attention of the RCO.

Procedure

All Field Staff including Compliance Officers (CO), District Structural Engineers (DSE) and Fire-Life Safety Officers (FLSO) shall complete an "Observation of IOR Performance of Duties Form" (hereinafter referred to as the Form, see attached) for each IOR responsible for inspecting work in the Field Staff's discipline as designated in the Testing, Inspection and Observation (TIO) Program.

When to complete a Form:

The Form shall be completed for each IOR approved for a construction project as follows:

- For projects lasting less than six months - at least one Form shall be completed.
- For projects lasting more than six months - a Form shall be completed every six months.
- For all projects - when the IOR fails to address previously issued violations written in Field Visit reports by Field Staff and/or does not fulfill his or her duties to meet one or more Code requirements including but not limited to Title 24, Part 1, Sections 7-141, 7-144, 7-145, a Form shall be completed. In general the IOR should be given an opportunity to address the violation prior to completing the Form.

  Exception: In a case of a particularly egregious violation (for example, falsifying a verified report) a prior reminder on a Field Visit report is not required; the Form shall be completed immediately.

Multiple projects inspected by the same IOR may be combined on one Form providing that the results of the performance observations for each project are the same.

Instructions for Completing the Form:

1. The Form is intended to document the IOR's performance as it relates to specific Code required IOR duties. Deficiencies in the IOR's performance must be addressed in the appropriate category on the Form (see section 4 - Line-by-Line instructions below).
2. The Form (please reference the final page of this SOP) is saved in a "fillable" adobe acrobat (.pdf) format. All data may be easily entered in the appropriate fillable fields. The Form shall be saved with an appropriate file name for each

DRAFT

IOR each time the Form is completed. Forms shall be saved using the following file naming format:

<Inspector's certification number - date (e.g. A10123 – 12-31-2013) >

3. Field staff shall enter the header information on behalf of the project and the IOR:
   - IOR Name
   - Cert. # (Field Staff shall insure accuracy of the Cert. # entered for the IOR)
   - Project # (or Project #s)

4. Determine whether the IOR "Meets" or "Does Not Meet" the *minimum code requirements* in each of the eight categories (see Line-by-Line instructions below). Choose the "N/A or N/O" column if the IOR cannot be evaluated in a particular category.

   - Choose the "Meets" column if the IOR has met the minimum code requirements. Note that failures to meet code requirements are addressed during regular field visits and documented on Field Visit reports. In general, if the IOR improves in response to Field Visit Report comments the "Meets" column may be marked on the Form. If Field Staff does not have the opportunity to verify whether the performance of the IOR has improved prior to the due date of the Form, the completion of the Form may be postponed for a few weeks to give the IOR the opportunity to improve.
   - Choose the "Does Not Meet" column if the IOR has not met minimum code requirements even after notification in a Field Visit report.
   - Choose the "N/A or N/O" column if the item is "Not Applicable" to the project or if there was "No Opportunity" to observe the IOR's performance on the project. For example, if there were no construction deviations on the project, Item 7 shall be marked "N/A or N/O." Likewise, if the construction project was completed in a single day there may not be an opportunity for Field Staff to observe the IOR's performance in every category.

<u>Line-by-Line Instructions:</u>

4a. **Item 1**, the IOR would receive a "Does Not Meet" mark for failing to perform personal, continuous inspection of the work. The IOR would receive a "Does Not Meet" mark for failing to personally inspect each part of the work prior to covering up with subsequent work or, in the event that work was done without prior notice to the IOR, for failing to report that work was done without the required inspection.

<u>Discussion</u>: Personal knowledge is the cornerstone of the IOR's responsibility. On large projects the IOR may be unable to perform continuous personal inspections and additional IOR(s) may be required. It is NOT acceptable to inspect a "representative sample," or even a majority of the work, and assume that the rest of the work is similar. It is also unacceptable for the IOR to base his personal knowledge on the reporting of other individuals, except that personal knowledge may be based on tests and special inspections performed by test labs or special inspectors listed in the

DRAFT

TIO Program approved by OSHPD for the specific project. Notes shall be added for "Does Not Meet" marks to reflect any extenuating circumstances (for example, if the hospital refuses to provide another IOR and work gets completed without inspection before OSHPD issues a stop work order, the responsibility for failing to provide continuous personal inspection may lie with the hospital rather than the IOR).

Examples of failing to perform personal, continuous inspection include:

i. Insufficient physical presence at the location of the construction work in progress for executing construction inspections, or required continuous inspections.

ii. Failing to inspect all parts of the work in all stages of construction.

iii. Delegating inspection work to other IORs, special inspectors or other individuals without prior approval from the Architect or Structural Engineer and OSHPD.

iv. Relying on photographs or other evidence rather than obtaining personal knowledge through continuous inspection.

v. Failing to notice construction deviations.

vi. Failing to inspect items shown as "existing" on the approved construction documents. For example, when the approved construction documents show required existing elements, these items must be inspected to confirm that the elements exist as shown.

vii. Failing to be familiar with and understand the requirements of the approved construction documents (whether or not the construction is compliant). For example, if the IOR cannot find appropriate details on the plans in a reasonable amount of time, or does not understand the meaning of notes or symbols on the plans for recently completed work, it is evidence that the IOR is not providing competent inspection.

viii. Failing to verify that tests and special inspections are taking place in accordance with the approved construction documents on or off-site and/or failing to report discrepancies to the Architect or Structural Engineer and OSHPD. Failure to report that inspections are being performed by individuals (special inspectors) who are not appropriately identified in the approved TIO Program or, that individuals are performing inspections outside of the areas for which they are specifically designated.

ix. Failing to report that tests or special inspections are being performed by entities that are not employed by the hospital governing board or authority and approved by the architect or engineer in responsible charge (per 7-149(b)).

x. Failing to report that test or special inspection reports do not definitively state whether or not the material tested or work inspected meets the requirements of the approved construction documents.

xi. Failing to report known missing or late test or special inspection reports.

DRAFT

4b. **Item 2a)**, the IOR would receive a "Does Not Meet" mark for failing to report inconsistencies or seeming errors in the approved construction documents.

Discussion: The IOR is generally not a licensed architect or engineer and cannot be expected to identify every non-code compliant aspect of the approved construction documents. The IOR should not be rated "Does Not Meet" for overlooking every seeming error in the approved construction documents.

Example: If the drawings clearly show that a grab-bar is to be installed thirty inches above finish floor the inspector should be familiar with the Code to know that it is not compliant and report the "seeming error."

4c. **Item 2b)**, the IOR would receive a "Does Not Meet" mark for construing the instructions of the architect or engineer in responsible charge to cause work to be done that is not in conformity with the approved construction documents.

Discussion: Although the IOR works under the direction of the architect or engineer in responsible charge, the instructions of the architect or engineer in responsible charge shall not be construed to cause work to be done which is not in conformity with the approved construction documents. All changes to the approved construction documents must be approved by OSHPD or "concurred with" as a non-material alteration. Clarifications and interpretations from the architect or engineer in responsible charge that do *not* change the approved construction documents need not be approved or "concurred with" by OSHPD.

Example: If the architect or engineer issued instructions, without first obtaining approval (or "concurrence") from OSHPD, which cause the locations of doors, windows, electrical switches, outlets, plumbing fixtures, etc. to be changed from what is shown on the approved construction documents, the IOR would be rated "Does Not Meet" if he or she did not report the non-conformance *whether or not the new locations are Code complaint*.

4d. **Item 3**, the IOR would receive a "Does Not Meet" mark for:

i. Failing to have OSHPD approved plans, specifications, post-approval documents or the TIO Program form on the job site at all times.

ii. Failing to have "non-material alteration" documents, test reports and special inspection reports on the job site at all times.

iii. Failing to have relevant codes and reference standards on the jobsite at all times.

It is acceptable to maintain the documents on the jobsite at all times in an electronic format.

Exception: It may be acceptable for the IOR to maintain the documents off the jobsite for some projects with the prior concurrence of FDD Field Staff.

DRAFT

Discussion: All such documents shall be well organized for quick and easy retrieval. Note, although the IOR should be aware of all documents issued relevant to the project there could be a situation where documents were issued without the IOR's knowledge. In this case the IOR shall not be rated "Does Not Meet" for the failure to maintain documents that he or she could not have known about.

Example: If the IOR cannot find special inspection reports for work that has been completed for more than 15 days, it would be grounds for a "Does Not Meet" mark.

4e. **Item 4**, the IOR would receive a "Does Not Meet" mark for failing to make any Code required notices.

Discussion: A clear method for providing notices should be established prior to start of construction. Email is a good method since a permanent record is created. Phone messages or verbal conversations may be acceptable if documented in writing.

4f. **Item 5**, the IOR would receive a "Does Not Meet" mark for repeatedly:

i. Failing to have field records (daily reports) for a day or portion of a day of inspection upon request.

ii. Failing to include any of the requirements (per 7-145(a)6) in the field records (daily reports). Of particular importance are the summary of noted deficiencies in the construction, or deviations from the approved construction documents, and the method of correction for same.

4g. **Item 6**, the IOR would receive a "Does Not Meet" mark for:

i. Failing to retain field records (daily reports) required by 7-145(a)6 on the jobsite until completion of the work.

Exception: It may be acceptable for the IOR to maintain the documents off the jobsite with prior concurrence of FDD Field Staff.

ii. Refusal to make such records available to OSHPD, the architect and/or engineer in responsible charge, or the owner upon request.

iii. Failure to submit such records to the hospital governing board or authority upon completion of the project.

4h. **Item 7**, the IOR would receive a "Does Not Meet" mark for failing to follow up initial notifications of deviations with written notifications when the contractor does not "immediately" correct the work. This reporting is a core responsibility of the IOR and shall be evaluated accordingly.

4i. **Item 8**, the IOR would receive a "Does Not Meet" mark for failure to submit verified compliance reports at the intervals or milestones listed in the approved TIO Program or when required by OSHPD. The IOR would also receive a "Does Not Meet" mark for failing to report deviations on a verified compliance report or for failure to make definitive statements about the specific work covered by the report. Finally, the IOR would receive a "Does

DRAFT

Not Meet" mark for failing to set forth detailed statements of fact as required by OSHPD.

Discussion: The verified report is an essential document. Evaluation of the verified reporting of the IOR should be of paramount importance to Field Staff.

The IOR is required to make definitive statements about the specific work covered by the verified report. The scope of work covered by the verified report must be defined. In some cases the scope is easy to define; for example the final report simply includes "all" work. In other cases considerable detail may be required; for example when an IOR is being replaced his or her last verified compliance report must provide detailed information about all aspects of the construction so that responsibility for the scope of inspection is documented. Reasonable diligence shall be exercised to obtain the facts.

5. All "Does Not Meet" marks shall be explained in the comments section. Comments shall be factual and brief. Field Visit Reports may be attached. Each comment shall be numbered to correspond with the relevant row number of the Form.
6. When a deficiency in the IOR's performance of duties violates the requirements of more than one category each applicable category shall be marked "Does Not Meet" and comments shall be added to cross reference the other categories.
7. Field Staff shall enter their name, the date the Form was completed, and mark the applicable Field Staff observer box.
8. Field Staff shall review the executed Form with the IOR in private to confirm the factual observation was accurate and email the completed Form to the IOR.
9. For Forms marked "Meets" in every category Field Staff shall email the Form to either their supervisor (RCO) or directly to the ISU at the discretion of their supervisor (RCO). Forms marked with "Does not Meet" in any category must be emailed to the supervisor (RCO).

RCO Actions:

10. The RCO shall check the "Cert. #" for the IOR entered on the Form and verify that it corresponds with the "Project #(s)" entered.
11. When an IOR is marked "does not meet" in any category the RCO shall evaluate the severity of the deviations and determine the appropriate action in accordance with procedures described in SOP 10-07.
12. The RCO shall retain a copy of the Form in the job file and email copies of Forms including reports of any corrective actions taken to the Inspection Services Unit at OSHPD.FDDISU@oshpd.ca.gov.
13. The RCO shall verify that Forms are completed for all IORs in accordance with the parameters described above; it is essential that all IORs be monitored consistently including when they are performing adequately and competently.

DRAFT

ISU Actions:

14. ISU will save all completed Forms in a folder named “Inspector Observation of Performance Forms” on the “G drive.” Folders for each inspector will be available bearing the inspector’s last name (and first name as required). Within each inspector folder will be a subfolder entitled “Meets” and a subfolder entitled “Does not Meet.” ISU will save all Observation forms in the appropriate folder where they can be easily accessed by OSHPD staff.

_____
FDD Deputy Director

DRAFT

OFFICE OF STATEWIDE HEALTH PLANNING AND DEVELOPMENT
FACILITIES DEVELOPMENT DIVISION

IOR Name: _____

Observation of Inspector of Record (IOR) Performance of Duties

Cert. #: _____

Project Number(s)

Item No.	Code Section	CAC Title 24, Part 1, Chapter 7, Requirements	Meets	Does Not Meet	N/A or N/O*
1	7-145(a)1, 7-145(a)2, 7-151(c)	The inspector shall have personal knowledge, obtained by continuous inspection of all parts of the work of construction in all stages of its progress to ensure that the work is in accordance with the approved construction documents.			
2	7-145(a)3	a) All inconsistencies or seeming errors in the approved construction documents shall be reported promptly to the architect or engineer in responsible charge for interpretation and instructions.			
		b) In no case, however, shall the instructions of the architect or engineer in responsible charge be construed to cause work to be done which is not in conformity with the approved construction documents.			
3	7-145(a)4	The inspector shall maintain a file of approved construction documents on the job at all times including all codes and regulations referred to in the approved construction documents and all reports of tests and inspections.			
4	7-145(a)5	The inspector shall notify the Office as required by CAC 7-145(a)5.			
5	7-145(a)6	The inspector(s) of record shall maintain field records (daily reports) of construction progress for each day or any portion of a day that they are present at the project site location.			
6	7-145(a)6, 7-145(a)7	All field records of construction progress (including daily IOR reports, test and special inspection reports, etc.) shall be retained on the job until the completion of the work.			
7	7-145(b)	The inspector shall notify the contractor, in writing, of any deviations from the approved construction documents or new construction not in compliance with the *California Building Standards Code.*			
8	7-151(a), 7-151(e)	Verified compliance reports shall be submitted to the Office at the intervals or stages of the work as stated in the approved testing, inspection and observation program and when required by the Office.			

Comments: (attach additional pages as necessary and list the number of sheets ___)

FDD Field Staff ❑ CO ❑ DSE ❑ FLSO _____ Date _____

* "N/A or N/O" means that the observation of the performance of the IOR was either "Not Applicable" or there was "No Opportunity" to observe the performance (see instructions).

Cc: IOR, RCO, and ISU

DRAFT

This page left intentionally blank.

Facilities Development Division

DRAFT SB 90 Financial Capacity Report

Requirements for Financial Capacity Report due on 1/1/2015

SB 90/ Section 130060 (g)(2)(E)

The hospital owner submits a financial report to the office at the time the plans are submitted pursuant to subparagraph (D). The report shall demonstrate the hospital owner's financial capacity to implement the construction plans submitted pursuant to subparagraph (D)

CAC Chapter 6, Section 1.5.2.8.1 Item (c)

(c) The hospital owner submits to the Office, no later than January 1, 2015, construction documents ready for review consistent with the letter of intent and the schedule submitted pursuant to Section 1.5.2 Items 8.l(a)(i) and (iii). The construction documents shall be accompanied by a financial capacity report. The financial capacity report shall demonstrate the hospital owner's financial capacity to implement the construction plans submitted pursuant to this subsection.

Financial Capacity Report Requirements for SB 90 for Individual Facilities

Individual Facilities filing SB 90 Financial Capacity Reports shall submit the following:

1. Affirmative Statement and Financial Capacity Summary:

An affirmative statement with the signatures of the CFO and CEO stating the facility has the financial capacity to implement the construction plans submitted pursuant to Health and Safety Code Section 130060(g)(2)(D).

Example of affirmative statement: *"The attached documents demonstrate the facility's ability to implement the construction project(s) identified in the construction plans submitted pursuant to Health and Safety Code Section 130060(g)(2)(D)"*

Provide a summary of how the facility intends to finance the construction project(s) identified in the construction plans prior to the expiration of the facility's SB 90 extension.

DRAFT

Financial Capacity Report Requirements for SB 90 for Individual Facilities

AND

2. Demonstration of Financial Capacity

(a) For investment-grade rated facilities planning to incur debt to comply with SB 90:

If the facility is currently investment-grade rated (BBB-/Baa3 or above) by a rating agency, the facility shall submit documents from the rating agency affirming that the facility's investment-grade rating will be maintained after the additional debt is incurred to finance the construction project(s) identified in the construction plans submitted pursuant to Health and Safety Code Section 130060(g)(2)(D). The credit rating of the facility shall not be below BBB-/Baa3; or

(b) For non-investment-grade rated facilities planning to incur debt to comply with SB 90:

If the facility is not credit rated or rated below BBB-/Baa3 by a rating agency, the facility shall demonstrate that it has the financial capacity to service the debt necessary to finance the construction project(s) identified in the construction plans submitted pursuant to Health and Safety Code Section 130060(g)(2)(D) with a minimum of 1.25:1 debt service coverage ratio over the period of the extension by providing either (i) internally prepared financial projections that are affirmed by an independent CPA firm or (ii) a feasibility study from an independent CPA firm; or

(c) For facilities not incurring debt to comply with SB 90:

If the facility intends to pay the cost (or any portion thereof) of the construction project(s) identified in the construction plans submitted pursuant to Health and Safety Code Section 130060(g)(2)(D) out of operating cash, the facility shall provide the previous five years of annual cash flow statements and current cash balance to demonstrate that the facility has the financial capacity to finance the construction project(s) identified in the construction plans submitted pursuant to Health and Safety Code Section 130060(g)(2)(D).

Financial Capacity Report Requirements for SB 90 for Individual Facilities

(a) For investment-grade rated facilities planning to incur debt to comply with SB 90:

If the facility is currently investment-grade rated (BBB-/Baa3 or above) by a rating agency, the facility shall submit documents from the rating agency affirming that the facility's investment-grade rating will be maintained after the additional debt is incurred to finance the construction project(s) identified in the construction plans submitted pursuant to Health and Safety Code Section 130060(g)(2)(D). The credit rating of the facility shall not be below BBB-/Baa3; or

Financial Capacity Report Requirements for SB 90 for Individual Facilities

(b) For non-investment-grade rated facilities planning to incur debt to comply with SB 90:

If the facility is not credit rated or rated below BBB-/Baa3 by a rating agency, the facility shall demonstrate that it has the financial capacity to service the debt necessary to finance the construction project(s) identified in the construction plans submitted pursuant to Health and Safety Code Section 130060(g)(2)(D) with a minimum of 1.25:1 debt service coverage ratio over the period of the extension by providing either (i) internally prepared financial projections that are affirmed by an independent CPA firm or (ii) a feasibility study from an independent CPA firm; or

Financial Capacity Report Requirements for SB 90 for Individual Facilities

(c) For facilities not incurring debt to comply with SB 90:

If the facility intends to pay the cost (or any portion thereof) of the construction project(s) identified in the construction plans submitted pursuant to Health and Safety Code Section 130060(g)(2)(D) out of operating cash, the facility shall provide the previous five years of annual cash flow statements and current cash balance to demonstrate that the facility has the financial capacity to finance the construction project(s) identified in the construction plans submitted pursuant to Health and Safety Code Section 130060(g)(2)(D).

Financial Capacity Report Requirements for SB90 for Hospital Provider Groups

Hospital Provider Groups filing SB 90 Financial Capacity Reports shall submit the following:

1. Affirmative Statement and Financial Capacity Summary:

An affirmative statement with the signatures of the CFO and CEO stating the Hospital Provider Group has the financial capacity to implement the construction plans submitted pursuant to Health and Safety Code Section 130060(g)(2)(D) for all facilities that are part of the group.

Example of affirmative statement: *"The attached documents demonstrate the Hospital Provider Group's ability to implement the construction project(s) identified in the construction plans submitted pursuant to Health and Safety Code Section 130060(g)(2)(D) for all facilities that are part of the group"*

Provide a summary of how the Hospital Provider Group intends to finance the construction project(s) identified in the construction plans prior to the expiration of the facility's SB 90 extension.

DRAFT

Financial Capacity Report Requirements for SB 90 for Hospital Provider Groups

AND

2. Demonstration of Financial Capacity

(a) For investment-grade rated Hospital Provider Groups planning to incur debt to comply with SB 90:

If the Hospital Provider Group is currently investment-grade rated (BBB-/Baa3 or above) by a rating agency, the Hospital Provider Group shall submit documents from the rating agency affirming that the Hospital Provider Group's investment-grade rating will be maintained after the additional debt is incurred to finance the construction project(s) identified in the construction plans submitted pursuant to Health and Safety Code Section 130060(g)(2)(D) for all facilities that are part of the group. The credit rating of the Hospital Provider Group shall not be below BBB-/Baa3; or

(b) For non-investment-grade rated Hospital Provider Groups planning to incur debt to comply with SB 90:

If the Hospital Provider Group is not credit rated or rated below BBB-/Baa3 by a rating agency, the Hospital Provider Group shall demonstrate that it has the financial capacity to service the debt necessary to finance the construction project(s) identified in the construction plans submitted pursuant to Health and Safety Code Section 130060(g)(2)(D) for all facilities that are part of the group with a minimum of 1.25:1 debt service coverage ratio over the period of the extension by providing either (i) internally prepared financial projections that are affirmed by an independent CPA firm or (ii) a feasibility study from an independent CPA firm; or

(c) For Hospital Provider Groups not incurring debt to comply with SB 90:

If the Hospital Provider Group intends to pay the cost (or any portion thereof) of the construction project(s) identified in the construction plans submitted pursuant to Health and Safety Code Section 130060(g)(2)(D) out of operating cash, the Hospital Provider Group shall provide the previous five years of annual cash flow statements and current cash balance to demonstrate that the Hospital Provider Group has the financial capacity to finance the construction project(s) identified in the construction plans submitted pursuant to Health and Safety Code Section 130060(g)(2)(D) for all facilities that are part of the group.

For projects already underway

- Specify qualifying projects with percentage of the projects already completed
- Provide financial capacity report to complete the project

Discussion/Questions

SB-90/ Section 130060 (g)(2)(E)

The hospital owner submits a financial report to the office at the time the plans are submitted pursuant to subparagraph (D). The report shall demonstrate the hospital owner's financial capacity to implement the construction plans submitted pursuant to subparagraph (D)

CAC Chapter 6, Section 1.5.2.8.1 Item (c)

(c) The hospital owner submits to the Office, no later than January 1, 2015, construction documents ready for review consistent with the letter of intent and the schedule submitted pursuant to Section 1.5.2 Items 8.l(a)(i) and (iii). The construction documents shall be accompanied by a financial capacity report. The financial capacity report shall demonstrate the hospital owner's financial capacity to implement the construction plans submitted pursuant to this subsection.

DRAFT

<u>Financial Capacity Report Requirements for SB 90 for Individual Facilities</u>

Individual Facilities filing SB 90 Financial Capacity Reports shall submit the following:

1. **Affirmative Statement and Financial Capacity Summary:**

   An affirmative statement with the signatures of the CFO and CEO stating the facility has the financial capacity to implement the construction plans submitted pursuant to Health and Safety Code Section 130060(g)(2)(D).

   Example of affirmative statement: *"The attached documents demonstrate the facility's ability to implement the construction project(s) identified in the construction plans submitted pursuant to Health and Safety Code Section 130060(g)(2)(D)"*

   Provide a summary of how the facility intends to finance the construction project(s) identified in the construction plans prior to the expiration of the facility's SB 90 extension.

AND

2. **Demonstration of Financial Capacity**

   <u>(a) For investment-grade rated facilities planning to incur debt to comply with SB 90:</u>

If the facility is currently investment-grade rated (BBB-/Baa3 or above) by a rating agency, the facility shall submit documents from the rating agency affirming that the facility's investment-grade rating will be maintained after the additional debt is incurred to finance the construction project(s) identified in the construction plans submitted pursuant to Health and Safety Code Section 130060(g)(2)(D). The credit rating of the facility shall not be below BBB-/Baa3; or

(b) For non-investment-grade rated facilities planning to incur debt to comply with SB 90:

If the facility is not credit rated or rated below BBB-/Baa3 by a rating agency, the facility shall demonstrate that it has the financial capacity to service the debt necessary to finance the construction project(s) identified in the construction plans submitted pursuant to Health and Safety Code Section 130060(g)(2)(D) with a minimum of 1.25:1 debt service coverage ratio over the period of the extension by providing either (i) internally prepared financial projections that are affirmed by an independent CPA firm or (ii) a feasibility study from an independent CPA firm; or

(c) For facilities not incurring debt to comply with SB 90:

If the facility intends to pay the cost (or any portion thereof) of the construction project(s) identified in the construction plans submitted pursuant to Health and Safety Code Section 130060(g)(2)(D) out of operating cash, the facility shall provide the previous five years of annual cash flow statements and current cash balance to demonstrate that the facility has the financial capacity to finance the construction project(s) identified in the construction plans submitted pursuant to Health and Safety Code Section 130060(g)(2)(D).

Financial Capacity Report Requirements for SB90 for Hospital Provider Groups

Hospital Provider Groups filing SB 90 Financial Capacity Reports shall submit the following:

1. **Affirmative Statement and Financial Capacity Summary:**

   An affirmative statement with the signatures of the CFO and CEO stating the Hospital Provider Group has the financial capacity to implement the construction plans submitted pursuant to Health and Safety Code Section 130060(g)(2)(D) for all facilities that are part of the group.

   Example of affirmative statement: *"The attached documents demonstrate the Hospital Provider Group's ability to implement the construction project(s) identified in the construction plans submitted pursuant to Health and Safety Code Section 130060(g)(2)(D) for all facilities that are part of the group"*

   Provide a summary of how the Hospital Provider Group intends to finance the construction

project(s) identified in the construction plans prior to the expiration of the facility's SB 90 extension.

AND

2. Demonstration of Financial Capacity

(a) For investment-grade rated Hospital Provider Groups planning to incur debt to comply with SB 90:

If the Hospital Provider Group is currently investment-grade rated (BBB-/Baa3 or above) by a rating agency, the Hospital Provider Group shall submit documents from the rating agency affirming that the Hospital Provider Group's investment-grade rating will be maintained after the additional debt is incurred to finance the construction project(s) identified in the construction plans submitted pursuant to Health and Safety Code Section 130060(g)(2)(D) for all facilities that are part of the group. The credit rating of the Hospital Provider Group shall not be below BBB-/Baa3; or

(b) For non-investment-grade rated Hospital Provider Groups planning to incur debt to comply with SB 90:

If the Hospital Provider Group is not credit rated or rated below BBB-/Baa3 by a rating agency, the Hospital Provider Group shall demonstrate that it has the financial capacity to service the debt necessary to finance the construction project(s) identified in the construction plans submitted pursuant to Health and Safety Code Section 130060(g)(2)(D) for all facilities that are part of the group with a minimum of 1.25:1 debt service coverage ratio over the period of the extension by providing either (i) internally prepared financial projections that are affirmed by an independent CPA firm or (ii) a feasibility study from an independent CPA firm; or

(c) For Hospital Provider Groups not incurring debt to comply with SB 90:

If the Hospital Provider Group intends to pay the cost (or any portion thereof) of the construction project(s) identified in the construction plans submitted pursuant to Health and Safety Code Section 130060(g)(2)(D) out of operating cash, the Hospital Provider Group shall provide the previous five years of annual cash flow statements and current cash balance to demonstrate that the Hospital Provider Group has the financial capacity to finance the construction project(s) identified in the construction plans submitted pursuant to Health and Safety Code Section 130060(g)(2)(D) for all facilities that are part of the group.

This page left intentionally blank.

oshpd Office of Statewide Health Planning and Development

Hospital Building Safety Board
400 R Street, Suite 200
Sacramento, California 95811-6213
(916) 440-8453
Fax (916) 324-9118
http://www.oshpd.ca.gov/Boards/HBSB/index.html

HOSPITAL BUILDING SAFETY BOARD
Administrative Processes and Code Changes Committee

Thursday, June 26, 2014
10:00 a.m. - 4:00 p.m.

Office of Statewide Health Planning and Development
400 R Street, Suite 452
Sacramento, CA 95811
(916) 440-8453

and

Metropolitan Water District Headquarters
700 N. Alameda Street, Suite 2-546
Los Angeles, CA 90012
(213) 897-0166

Committee Members Present
Scott Karpinen, Chair
John Donelan, Vice-Chair
Rami Elhassan
Henry Huang
Bruce Macpherson
Carl Scheuerman
Michael Gritters, Consulting Member

HBSB Staff
Linda Janssen, Executive Director
Cathy Kane
Evett Torres

OSHPD Staff
Paul Coleman, Deputy Director
Hussain Bhatia
Gary Dunger
Patricia Friel
Glenn Gall
Mohammad Karim
Jacob Knapp
Roy Lobo
Ramin Sadr

"Access to Safe, Quality Healthcare Environments that Meet California's Diverse and Dynamic Needs"

1. Welcome and Introductions

Committee Chair Scott Karpinen opened the meeting and invited the committee, OSHPD staff, and public members to introduce themselves.

2. Review Policy Intent Notice for Testing Laboratories

Mr. Karim gave a presentation on the draft Policy Intent Notice (PIN) 58.

- The scope of the PIN is limited to structural tests only. It does not include other disciplines.
- The 2013 California Building Code (CBC) states that approved test agencies shall be qualified under "appropriate reference standards," which gives building officials a wide latitude.
- The old CBC used to say that all labs need to be ISO 17025-certified. In the new code that language has been transferred to special seismic certification only.
- The Model Code changes reference standards from Chapter 35 to appropriate reference standards.
- Any lab with accreditation under ISO 17025 is automatically approved by OSHPD.
- The CBC explicitly permits registered design professionals and those working under them to act as special inspectors, provided they are qualified.
- Mr. Karim continued to explain the requirements of the PIN, including accreditation and foreign labs.
- OSHPD's goal for the PIN is to clarify approved testing agencies and appropriate testing standards for those agencies. In the process, the PIN proposes to create

an OSHPD pre-approved laboratory program for testing agencies. Mr. Karim explained the 16 components of the Policy.

Mr. Coleman stated that the driving force for the PIN is a mention of approved agencies in CBC 1703A.1, which OSHPD has not been enforcing until now.

Discussion and Public Input

An Interested Party asked about feedback from the testing labs. Mr. Karim said that the Division of the State Architect (DSA) had responded favorably; they are looking forward to the marketing opportunity.

The Interested Party asked about any implementation concerns, as well as the availability of the application. Mr. Karim responded that the accreditation requirement for the labs includes a requirement for an Engineering Manager who has a license in the jurisdiction. He added that OSHPD has a draft application form that has not been vetted yet.

The Interested Party expressed concern about the timing of the PIN – the impact of its programs on work in the field. Mr. Coleman explained that when the PIN is issued, its enforcement will have an effective date. The latest date would probably be January 1, 2015.

Mr. Huang asked about the manufacturers' own laboratories. Mr. Karim said that Mason wants to do its own testing at its New York lab; they have to hire a California-

licensed independent engineer to oversee it. Once the testing is done it must be reviewed and accepted by a licensed California structural engineer before it goes to OSHPD.

Mr. Karim clarified for Mr. Huang that ISO 17025 Section 5.61 is for calibration only, not for qualification. Mr. Bhatia added that the calibration part is associated with the accreditation of the lab.

Mr. Huang asked about accreditation in Policy 12. Mr. Karim said that of the 500-600 labs on DSA's list, only two are not accredited to an ISO standard or something equal.

Mr. Huang commented that Policy 12 was not clear regarding the number of independent California licensed engineers involved in the testing; it implied three but the correct number is actually two.

An Interested Party asked about noticeable changes from the current process. Mr. Karim answered that the Pre-Approval Program will be the only one. Mr. Coleman added that currently, OSHPD is not requiring any documentation along with the Testing-Inspection-Observation (TIO) to substantiate that the proposed lab is accredited. This information should be requested at the time the lab is selected.

Mr. Elhassan asked about special systems, specifically, pressure isolators and dampers. Mr. Karim replied that for companies outside the country, there is no option for an independent licensed California engineer to provide oversight, so the company

must be ISO-certified. Policy 10 is specific to foreign testing labs. Mr. Elhassan suggested clarifying Policy 12 to specify *domestic* testing labs.

Mr. Elhassan noted that there are some labs in the U.S. such as UC San Diego that test large isolators. They may not have proper accreditation, so they will have to go under Policy 12. Mr. Karim concurred that this section was specifically created for university labs; they are qualified but not ISO-accredited.

Mr. Karim and Mr. Coleman felt that Policy 10 needs to be clarified—it is the only one that applies to foreign labs. Mr. Huang ascertained with Mr. Karim that Policy 2 concerns domestic only.

Mr. Coleman wanted to add to the first page, last paragraph: "…hence they are approved by OSHPD *after submittal of required documentation*."

Mr. Elhassan ascertained with Mr. Karim that the PIN does apply to all structural tests including seismic certification labs.

MOTION: (M/S/C/) [Scheuerman/Gritters]

The committee voted unanimously to endorse PIN 58 as presented, with amendments to be made based on comments given during the meeting.

3. Review Standard Operating Procedure and Reporting Form for Inspector of Record Performance Observation

Mr. Coleman stated that this was a Standard Operating Procedure (SOP) that OSHPD had been considering based on some specific code language that requires OSHPD to monitor the performance of the Inspector of Record (IOR). OSHPD was intending to develop a process that is simple, straightforward, and very objective.

Mr. Coleman added that the SOP was also a response to a negative audit done by the State Auditor on DSA's IOR program a couple of years ago.

- The SOP begins with a description of the IOR's background and work requirements.
- IORs have an opportunity themselves to monitor the OSHPD field staff's work on OSHPD's website. Those surveys are done through SurveyMonkey and are anonymous.
- If an OSHPD field staff person observes a problem with an IOR, there should be some discussion and opportunity to correct the issue. A rating of "Does Not Meet" should not be a surprise.
- The eight categories on the form come directly from the code. The code section references are given.

Discussion and Public Input

Mr. Scheuerman asked whether an IOR has the ability to appeal the ratings on the report. Mr. Knapp stated that Code Section 7-213 supplies a procedure to remove certification for an IOR who is not competently performing his duty. However, the SOP report does not result in any barriers to recertification.

Mr. Scheuerman raised the possibility of a negative report resulting from a disagreement in code interpretation between field staff and the IOR. What is the IOR's defense? Mr. Knapp responded that OSHPD needs to consider what process, if any, would be appropriate. Mr. Coleman stated that there is in place a Code Application Notice (CAN) and an appeals process for suspension or revocation of an IOR's certification. This SOP form by itself is not adequate to cause suspension or revocation.

Mr. Knapp emphasized that the form can be used for positive feedback, not just negative, to the IOR community.

Mr. Karpinen asked about the creation of new paperwork. Mr. Coleman responded that the law and regulations require OSHPD to monitor the performance of IORs. Some field staff are diligent about writing reports that discuss the performance of IORs; some are not. The state audit of DSA had shown no evidence that the IOR's performance is ever monitored. OSHPD's response was to devise this form.

The committee observed that the form is sent to the IOR, the Regional Compliance Officer (RCO), and the Inspection Services Unit (ISU). They agreed that the owner and the design team should be added.

Mr. Coleman noted that OSHPD is working on developing an IOR academy.

Mr. Lobo commented that one IOR may be working on many projects. Mr. Coleman said that one form can cover all the projects being done by one design team.

Mr. Huang suggested that any educational opportunity being done by the HBSB and OSHPD, such as the IOR academy, should broaden participation. The more people trained to do the work, the better for the industry.

Mr. Coleman clarified that OSHPD has an informal appeals process known as Comment and Process Review (CPR). It provides the opportunity for an IOR to talk to the compliance officer who made a comment of Does Not Meet. The next steps are to talk to the RCO, then the Division Chief. This process is always available.

Mr. Coleman stated that the form should be viewed as a positive – showing that as an industry, we are stepping up our game, monitoring ourselves, providing training, ensuring that owners are getting what they are paying for in terms of inspections and approved documents.

MOTION: (M/S/C/) [Gritters/Scheuerman]
The Board voted unanimously to endorse the Standard Operating Procedure: Use of Observation of IOR Performance of Duties Form, including the additional copy recipients.

Mr. Coleman requested the addition of a sentence stating that this process is subject to CPR.

4. Discuss "Financial Capacity" Policy Intent Notice/Code Application Notice that Provides Direction to Hospitals Who Applied for Relief under Senate Bill 90

Mr. Bhatia stated that a Financial Capacity Report is due January 1, 2015 for SB 90, for applicants who have requested extensions for SBC 1 buildings. With consultation from Carl McClaney of Cal-Mortgage and Mr. Knapp, OSHPD prepared a proposed draft of what should be submitted to meet the requirements for the financial capacity report.

- For individual facilities, the Financial Capacity Report should contain:
    - An Affirmative Statement and Financial Capacity Summary
    - A Demonstration of Financial Capacity, with varying requirements for investment-grade rated facilities planning to incur debt, non-investment-grade rated facilities planning to incur debt, and facilities not incurring debt.

Discussion and public input

An Interested Party asked about a requirement for facilities not incurring debt—to provide annual cash flow statements from the previous five years. Mr. Bhatia answered that someone at OSHPD's Healthcare Information Division (HID) may be the one evaluating the statements.

The Interested Party then asked who developed the 1.25:1 debt service coverage ratio. Mr. McClaney answered that typically when Cal-Mortgage insures a loan, they require in the bond covenant that they meet that coverage ratio which includes the 1.25 cushion.

An Interested Party ascertained with Mr. Coleman that for the Affirmative Statement, OSHPD is looking for a memo signed by the CEO and CFO. After discussion, the committee agreed that the language should read *"…an individual with authority to sign, e.g., a CEO or CFO..."*

Mr. Gritters noted that many clients have fundraising campaigns around major building programs. He suggested that the language acknowledge that—viable campaigns can be used to supplement the previous five years of cash flow. Mr. McClaney stated that in the past, corporations have had a history of successful fundraising; Cal-Mortgage has considered that and concluded that they will most likely be able to raise a certain amount of funds. Hospitals with foundations should have records of money they have raised.

Mr. Coleman stated that a hospital could present a feasibility study showing multiple money streams—borrowed money, cash on hand, operating cash, philanthropy—that it will use to finance the project. Each stream needs to be shown as viable.

Mr. Knapp stated that the issue for OSHPD is that SB 90, in the statutory scheme, puts the burden on the hospital owner to submit a report that demonstrates the hospital owner's financial capacity to implement the submitted construction documents.

An Interested Party discussed with Mr. McClaney the need to have any submitted financial report to be one that is audited. Mr. McClaney pointed out that audited financials are public. Mr. Coleman stated that if the report is audited by a CPA firm, and

it yields an outcome that the facility has the financial capacity to do the project, then OSHPD has complied with what the law has asked it to do.

Mr. McClaney pointed out that #2(b) relies on internally prepared projections—they can seem reasonable, but there is no guarantee.

Mr. Coleman stated that when OSHPD receives the reports, staff in HID will review them to determine whether the assumptions are reasonable. The reports will then be kept on file as public records.

He continued that a PIN will be issued as a result of this meeting. The proposed Financial Capacity Report had already been advertised extensively to get as much public participation for today's meeting as possible. OSHPD was concerned that if hospitals do not have as much time as possible to complete the reports, it will be an undue burden on them; they should not be non-compliant because they did not have enough time to put together a report.

The group agreed to insert "*and/or*" in #2(b), to allow non-investment grade facilities to incur debt for a portion of the work and to use operating cash for a portion of the work.

Mr. Lobo stated that around 120 hospitals are involved. Mr. Bhatia specified that this includes 300-plus buildings.

Mr. Bhatia stated that the only difference between individual facilities and hospital provider groups is that OSHPD would be looking for the Financial Capacity Report to cover the entire hospital provider groups. Mr. Coleman noted that the finances for some groups are set up with each individual hospital as standalone, while other groups have everything done from headquarters.

Mr. Scheuerman mentioned that sometimes the financing may not correlate directly to the construction project. Is it adequate for a hospital to show that it has sufficient credit capability to deliver the project? OSHPD staff responded that it was. Mr. Scheuerman emphasized that the relationship between the sourcing of the funds and the uses of the funds may be limited. The group agreed that the bond rating is the proof.

Mr. McClaney emphasized the wiggle room in #2(b). OSHPD is relying on the management and board at the facility to come through. Spending the time and money to affirm it is expensive on both sides.

Mr. Coleman expressed just two concerns with reports that OSHPD may receive: that someone says that after due diligence, they cannot find any way to finance the work; and that someone submits very unreasonable statements for meeting the financial obligation.

Mr. Coleman stated that OSHPD is more than willing to help hospitals to look at alternative options if they realize they cannot afford the option they chose in the submitted Financial Capacity Report.

He continued that OSHPD would clarify the language to show that hospitals can use a combination of borrowing and cash. He was hoping to have the report out in two weeks.

Mr. Scheuerman stressed the importance of mailing the new PIN with a cover letter to SB 90 applicants.

Mr. Lobo pointed out that not having enough cash can affect a hospital's extension date.

An Interested Party suggested sending out FAQs along with the PIN for those not used to reading this type of language.

Mr. Bhatia concluded with instructions for projects already underway.

MOTION: (M/S/C/) [Scheuerman/Macpherson]
The committee voted unanimously to endorse the concepts presented for the Financial Capacity PIN for SB 90 extension qualification, to be amended by concepts discussed during the meeting and recorded in the meeting report.

5. Comments from the Public/Board Members on Issues not on this Agenda:

- The Board will receive comments from the public/members at this time on matters not on the agenda. Matters raised at this time will be taken under consideration for placement on a subsequent agenda.

There were no further comments.

6. Adjournment

MOTION: (M/S/C/) [Scheuerman/Gritters]

The committee voted unanimously to adjourn at 2:08 p.m.

OSHPD Office of Statewide Health Planning and Development

Hospital Building Safety Board
400 R Street, Suite 200
Sacramento, California 95811-6213
(916) 440-8453
Fax (916) 324-9118
www.oshpd.ca.gov/Boards/HBSB/index.html

9/11/14

HOSPITAL BUILDING SAFETY BOARD
Administrative Processes and Code Changes Committee

MEETING NOTICE
Tuesday, September 23, 2014
10:00 a.m. — 4:00 p.m.

at the
Office of Statewide Health Planning and Development
400 R Street, Suite 452
Sacramento, CA 95811
(916) 440-8453

And, at the
Metropolitan Water District Headquarters
700 N. Alameda Street, Suite 2-500
Los Angeles, CA 90012
(213) 897-0166

Board Members: Scott Karpinen, Chair; John Donelan, Vice-Chair; Enid Eck; Rami Elhassan; Henry Huang; Bruce Macpherson; Carl Scheuerman

Consulting Member: Michael Gritters

OSHPD Staff: Gary Dunger; Glenn Gall; Ramin Sadr

HBSB Staff: Linda Janssen, Executive Director; Cathy Kane; Evett Torres

MEETING AGENDA

NOTE: Agenda order is tentative and subject to change without prior notice. All times are approximate and subject to change. A 30-minute to one-hour lunch will be taken sometime during the day.

1. **Welcome and Introductions**

2. **ASHRAE 170 Presentation – Public Member**
   - Discussion and public input

3. **2016 Code Amendments – OSHPD Staff**
   - Discussion and public input

4. **Comments from the Public/Board Members on Issues not on this Agenda:**
   - The Board will receive comments from the public/members at this time on matters not on the agenda. Matters raised at this time will be taken under consideration for placement on a subsequent agenda.

5. **Adjournment**

REMINDER: Please call (916) 440-8453 on Monday, September 22nd after 3:00 p.m. to confirm that the meeting will be taking place as scheduled. The recording will verify the meeting date and location.

NOTE: Meeting facilities and restrooms are accessible to the physically disabled. If any special accommodations (assistive listening device, sign language interpreter, etc.) are needed, please contact Board Staff at (916) 440-8453. Requests should be made as soon as possible but no later than 10 business days prior to the meeting.

Parking:
Sacramento—There are garages at 500 R Street and CalPERS Plaza. CalPERS Plaza has two entrances: one on Fifth Street, north of R Street, which charges $2./hour or $8/day; and another on Q Street, between Fourth and Fifth Streets, which charges $2.50/hour or $12/day. There are also 10-hour parking meters and stations around the perimeter of the building.

Los Angeles—There is valet service at the Metropolitan Water District Building that is available 8 am to 5 pm and they charge between $6 and $14. There is also Five Star Parking lot on Cesar Chavez Avenue and Alameda Street that charge $14/day or $2.00 every 20 minutes.

Questions? Call Board Staff at the above phone number.

ASHRAE Standard 170 Update

(from the ASHRAE 2014 NYC Winter and Seattle Summer Meetings)

By

Abdel K. Darwich

PE, LEED AP, HFDP

Associate Principal

Guttmann and Blaevoet Consulting Engineers

Sacramento, CA

Disclaimer : The information in this presentation does not constitute ASHRAE or committee SSPC 170 official position.

Kaiser Interpretation -1

- 80% of the visits to exam rooms are of consultative nature
- Consider using the ventilation rates of 62.1(office space) for exam rooms in outpatient clinics.
- The committee did not agree on referring any healthcare space to 62.1. However, ACH was reduced from 6 to 4 to save energy.

Kaiser Interpretation -2

- NOT all ACHs listed in the Std 170 are research based. The ACHs values have three origins:

1. Research
2. Authority guidance like CDC guidelines
3. History (values that have been working for years).

Kaiser Interpretation -3

- Difference in ventilation rates in ER and radiology waiting rooms between 62.1 and 170.
- Kaiser was comparing these spaces to general reception areas in 62.1.
- The committee response was that these spaces cannot use 62.1 because these spaces will likely have occupants with undiagnosed communicable respiratory diseases such as tuberculosis.

Kaiser Interpretation -4

- Although thermal comfort is in Std 170 scope, compliance with Std. 170 does not guarantee compliance with Std. 55 (ASHRAE thermal comfort standard).

100%OA interpretation

- Committee voted on my request for interpretation to whether Std 170 allows low ventilation rates for 100% OA systems.
- The response was that Std 170 does not differentiate between re-circulating and 100%OA systems and as such even 100%OA systems will have to meet the total ACH requirements.

Ultra clean Ventilation in OR

- There was a presentation to the committee about Ultra Clean Ventilation (UCV) in OR rooms.
- 30,000 ORs in the worlds use this technology but only 300 in the USA because it is not code required.

Lab Ventilation

- Committee approved condensing the current 9 laboratory types into one category named “Lab work area” to be consistent with FGI.
- Most of the committee members did not support omitting ACH for labs because hospital designers are not generally lab designers and may not be familiar with Z9.5.
- The ACH will 2 OA and 6 Total. Negative Pressure. Note has been added to allow a performance approach using Z9.5 if the contaminants in the lab are well defined.

Hybrid OR

- Need to include specific requirements in the Standard.
- Where is the sterile field in a hybrid OR? Hybrid OR tables can swing 240° and move 4’ each way. Preliminary answer : the sterile field is where an open wound is likely to occur which is the table original position.

OR Ventilation

- The total ACH to the OR needs not be introduced at the primary air supply (directly above the surgical table). It is the total ACH in the room.
- The primary air supply must extend a minimum of 12” from each side of the surgical table and that not more than 30% of its area can be used for other than air supply (lights, gas columns…). Some designers/architects are misusing. Should the standard specify a maximum value for the primary air supply (e.g 18” or 24”)?

Other items

- Switchable pressure rooms are not allowed. Previously, this applied to AIIR only.
- Committee created a Task Group to study Natural Ventilation in Healthcare.
- Committee formed a group to clarify the scope delineation between Std.170 and Std. 62.1.
- ASHRAE board of Directors has approved in January 2014 ASHRAE position paper on Infection Diseases which was subsequently published.

THANK YOU !

OSHPD

OSHPD AMENDMENTS PROPOSED FOR THE 2016 CALIFORNIA BUILDING CODE

1224 HOSPITALS
1225 SNFs
1226 CLINICS

September 2014

Eric H. Jacobsen, AIA
Senior Architect
Building Standards Unit
Facilities Development Division

Keeping the code responsive to current medical practice – OSHPD - FDD - *BSU*

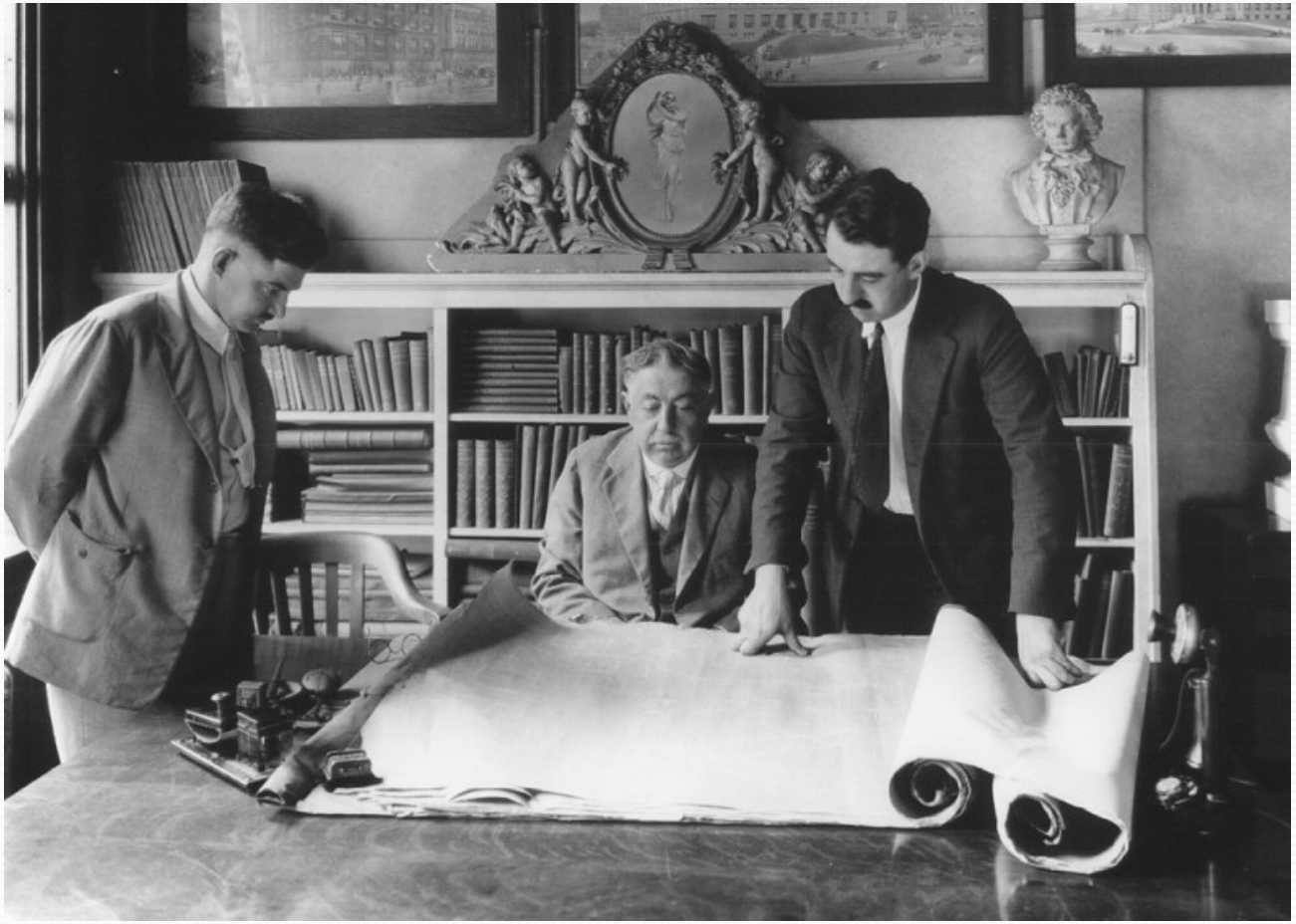

"New concepts of design" reviewed by FDD in Plan Review for Building Permit

are acknowledged through regular updates to California Building Code language.

Proposed Amendments for the 2016 California Building Code

SECTION 1224 [OSHPD 1] HOSPITALS

1224.4 GENERAL CONSTRUCTION

- Relocate various support areas for common reference from unique Service Spaces and facility types

1224.16 ANESTHESIA SERVICE SPACE

- Restructure perioperative support for clarification

1224.28 SUPPLEMENTAL SURGERY SERVICES

- Add Section 1224.28.4 Hybrid Operating Rooms

1224.33 EMERGENCY SERVICE

- Reformat into three tiers: Standby; Basic; and Comprehensive Emergency Medical Service; for better alignment with Title 22 and with FGI *Guidelines*

1224.34 NUCLEAR MEDICINE

- Add sections to cover: Scintigraphy (Gamma Camera) Facilities; Positron Emission Tomography (PET); Single-Photon Emission Computed Tomography (SPECT) Facilities; and Radiosurgery (Cyber-Knife) Suites.

1224.39 OUTPATIENT SERVICE SPACE

- Add Section 1224.39.5 Hyperbaric Therapy Service Space

1224.4 GENERAL CONSTRUCTION

1224.4.4 Support areas for patient care

1224.4.4.2 Administrative centers or nurse stations.

Administrative centers or nurse stations …

Section to be relocated from 1224.14.2.1 (in NURSING SERVICE SPACE) to GENERAL CONSTRUCTION

While all Nursing Service Spaces have administrative centers/nurse stations, not all administrative centers/nurse stations are located in Nursing Units.

Location of these requirements in 1224.4 General Construction is more appropriate for reference from the other Service Spaces.

1224.4 GENERAL CONSTRUCTION

***1224.4.4.4* Medication station. …**

***1224.4.4.4.1* Medicine preparation room.** *If provided, this room shall be directly accessible from the nursing station. It shall contain the following:*

1. *~~a~~ ~~w~~Work counter,*
2. *~~h~~Handwashing station ~~fixture~~,*
3. *Lockable refrigerator, and*
4. *~~l~~Locked storage for controlled drugs.*

When a medicine preparation room is to be used to store one or more self-contained medicine dispensing units …

***1224.4.4.4.2* Self-contained medication dispensing unit. …**

Sections to be relocated from 1224.14.2.8 (in NURSING SERVICE SPACE) to GENERAL CONSTRUCTION

1224.4 GENERAL CONSTRUCTION

1224.4.4.5 ***Nourishment area.*** *~~There shall be a nourishment area with~~ Nourishment areas or rooms required in patient care areas shall include the following:*

1. ~~s~~Sink,
2. ~~w~~Work counter,
3. ~~r~~Refrigerator,
4. ~~s~~Storage cabinets, ~~and~~
5. ~~e~~Equipment for hot and cold nourishment between scheduled meals~~.~~,
6. Provisions and space shall be included for temporary storage of unused and soiled dietary trays not picked up at mealtime~~.~~,
7. Handwashing stations ~~fixtures~~ separate from the nourishment sink shall be in, or adjacent to, the nourishment area.

Section to be relocated from 1224.14.2.10 (in NURSING SERVICE SPACE) to GENERAL CONSTRUCTION

1224.4 GENERAL CONSTRUCTION

***1224.4.4.6* Clean utility/work room.** *Soiled and clean utility or holding rooms shall be separated and have no direct connection. If the room is used for preparing patient care items, it shall contain:*

1. *~~a~~ ~~w~~Work counter,*
2. *~~a~~ ~~h~~Handwashing station ~~fixture~~, and*
3. *~~s~~Storage facilities for clean and sterile supplies.*

***1224.4.4.6.1* Clean supply room.** *If the room is used only for storage and holding as part of a system for distribution of clean and sterile materials, the work counter and handwashing station ~~fixture~~ may be omitted.*

Sections to be relocated from 1224.14.2.6 (in NURSING SERVICE SPACE) to GENERAL CONSTRUCTION

1224.4 GENERAL CONSTRUCTION

1224.4.4.7 ***Soiled workroom ~~or soiled holding room.~~*** *~~This~~ The soiled workroom or soiled holding room shall be separate from the clean utility room. The soiled workroom/utility room shall contain:*

1. ~~a c~~Clinical sink (or equivalent flushing-rim fixture) with a hot and cold mixing faucet~~.~~,

2. ~~The room shall contain a h~~Handwashing station ~~fixture.~~,

3. ~~The room shall have a w~~Work counter ~~and~~,

4. ~~s~~Space for separate covered containers for soiled linen and waste.

1224.4.4.7.1 ***Soiled holding room.*** *Rooms used only for temporary holding of soiled material may omit the clinical sink and work counter. If the flushing-rim clinical sink is eliminated, facilities for cleaning bedpans shall be provided elsewhere.*

Sections to be relocated from 1224.14.2.7 (in NURSING SERVICE SPACE) to GENERAL CONSTRUCTION

1224.16 ANESTHESIA SERVICE SPACE

1224.16.1 ***~~Post-anesthetic care units (PACUs) …~~*** ***General****. The anesthesia service space shall provide perioperative support services to the surgical service space as required under this section.*

Exception: *In a rural general acute care hospital, …*

This Section has been re-formatted and enhanced to include other perioperative services.

The Anesthesia Service Space generally provides more than just a "Post-Anesthetic Care Unit" (**PACU**).

This section has been restructured to address the other perioperative services provided in support of the Surgical Service Space, and formatted in style similar to the other Service Spaces for consistency.

1224.16 ANESTHESIA SERVICE SPACE

1224.16.2 ***Preoperative patient care area***. *In facilities with two or more operating rooms, areas with patient care stations shall be provided to accommodate patients on gurneys as well as seating space for patients and visitors. The preoperative area is an unrestricted area and shall be under direct visual control of the nursing staff and may be part of the recovery ~~service~~ space. If the preoperative patient care area will serve other purposes, such as overflow PACU, or holding area, applicable requirements in Section 1224.16.3 (PACU) shall be met.*

Section relocated from 1224.15.2 (in SURGICAL SERVICE SPACE) to ANESTHESIA SERVICE SPACE.

1224.16 ANESTHESIA SERVICE SPACE

1224.16.2.1 Space requirements.

1224.16.2.1.2 Cubicles. *Where cubicles are used, each station shall have the following:*

1. *Minimum clear floor area of 80 square feet;*
2. *3 feet shall be provided between the sides and foot of patient lounge chairs/gurneys and adjacent walls or partitions.*
3. *Provisions for patient privacy such as cubicle curtains shall be made.*

1224.16.2.1.3 Single-bed rooms. *Where single-bed rooms are used, each room shall have the following:*

1. *Minimum clear floor area of 100 square feet;*
2. *3 feet shall be provided between the sides and foot lounge chairs/beds/gurneys and adjacent walls or partitions.*

This Section has been re-located from 1224.15.2 Preoperative patient holding area(s) in "Surgery Service" to "Anesthesia Service"

1224.16 ANESTHESIA SERVICE SPACE

1224.16.3 Post-Anesthetic Care Unit (PACU). *The PACU is an unrestricted area with a minimum of 1.5 post-anesthesia care stations per operating room. At least one door to the recovery room shall access directly from the surgical service space without crossing public corridors.*

1224.16.3.1 Space requirements. *Each patient position shall have the following:*

1. *Minimum clear floor area of 80 square feet, ~~with a~~*
2. *5 feet minimum clearance shall be provided between patient gurneys or beds, and ~~a~~*
3. *4 feet minimum clearance shall be provided between the sides and the foot of patient beds/gurneys and adjacent walls or other fixed ~~obstructions~~ elements.*

1224.16.3.2 Patient privacy. *Provisions for patient privacy such as cubicle curtains shall be made.*

1224.16.3.3 Handwashing stations. *Handwashing stations ~~fixtures~~ shall be provided with at least one for every four patient positions ~~gurneys~~ uniformly distributed to provide equal access from each patient station ~~gurney~~.*

1224.16 ANESTHESIA SERVICE SPACE

1224.16.5 Support areas for patient care.

1224.16.5.1 Administrative area/nurse station. *A nurse station shall be provide in postoperative patient care areas and allow direct observation of patients ~~nurse control~~ and charting facilities. The nurse station shall comply with the requirements of Section 1224.4.4.3.*

1224.16.5.2 Clinical sink. *A clinical sink shall be provided in postoperative patient care areas, with provisions for bedpan cleaning.*

1224.16.5.3 Medication station. *Each PACU shall contain a medication station in accordance with Section 1224.4.4.4 ~~14.2.8.~~*

1224.16.5.4 Ice-making. *Ice-making equipment shall be provided in the perioperative service space. Ice-making equipment is permitted to be located in preoperative or postoperative patient care areas, however it shall not be located in semi-restricted areas.*

1224.16.5.6 Storage. *Storage space shall be provided for gurneys, supplies, and equipment.*

These Sections have been re-formatted from previous Section 1224.16.1

1224.16 ANESTHESIA SERVICE SPACE

1224.16.6 Staff toilet rooms. *Staff toilet rooms shall be located in the postoperative patient care areas to maintain staff availability to patients.*

1224.16.7 Support areas for patients, families and visitors

1224.16.7.1 Waiting area. *A waiting area in compliance with Section 1224.4.5 shall be provided convenient to the Anesthesia Service Space. This waiting area may be shared with other service areas.*

1224.16.7.2 Patient change area. *A changing area shall be provided for outpatient use and included space for changing or gowning, provisions for storing patient belongings during the procedures, and access to patient toilet(s).*

These Sections have been added for clarification and for alignment with FGI Guidelines.

1224.28 SUPPLEMENTAL SURGERY SERVICES

***1224.28.4 Hybrid Operating Rooms**. Hybrid operating rooms shall comply with the requirements of Section 1224.15.1, have the support of the service areas in Section 1224.15.3, and comply with the requirements in this section.*

Section added to SUPPLEMENTAL SURGERY SERVICES

Advances in Interventional Radiology/ Imaging have resulted in utilizing various imaging modalities (**CT, MRI, and vascular imaging**) before, during, and after invasive procedures.

These procedure rooms need to respond to both the **sterile environment of an Operating Room** and the space, control, and support of the **imaging equipment** to be used.

Section 1224.28.1 "Hybrid Operating Rooms" has been added to Supplemental Surgery Services to respond to the most common hybrid combinations.

1224.28 SUPPLEMENTAL SURGERY SERVICES

Operating Room – Compliance with CBC Section 1224.15.1 required

*"A room **specifically designed for the performance of surgical procedures**. (In common understanding, this means most types of surgical procedures, especially those involving the **administration of anesthesia, multiple personnel**, recovery room access, and a fully controlled environment."* CBC 1224.3

General Operating Room

Hybrid Operating Room

1224.28 SUPPLEMENTAL SURGERY SERVICES

Semi-Restricted Area - Compliance with CBC Section 1224.15.3

*"Areas such as airborne infection isolation exam/treatment rooms, **surgical corridors**, central sterile supply spaces and minor surgical procedure rooms."* CBC 1224.4.11.4.1

The surgical suite shall be divided into two designated areas: semi-restricted and restricted, defined by the physical activities performed in each area. [FGI 2.2-3.3.1.1 (4)]

- **Semi-restricted** – peripheral support areas of the surgical suite, including storage areas for clean and sterile supplies, sterile processing, scrub sinks, and **corridors leading to restricted areas** of the surgical suite.
- **Restricted** – a designated space within the semi-restricted area of the surgical suite that can be reached only through a semi-restricted area (i.e. **operating rooms**).

1224.28 SUPPLEMENTAL SURGERY SERVICES

Interventional Radiology/Imaging

Diagnostic Imaging (i.e. Angiography): *"The radiographic visualization of blood vessels following introduction of contrast material for purposes of diagnosis."* CBC 1224.3

These are often provided **within Radiology/Imaging Service Areas**. CBC 1224.18

Interventional Radiology (Interventional Angiography): The use of imaging equipment to provide **therapeutic procedures** such as cardiac catheterization, electrophysiology, cardiac stinting, and implantation of devices, **performed in a controlled sterile environment**. (FGI Guidelines)

*If interventional angiography procedures are to be performed… the suite **must comply with general operating room requirements** in Section 1224.15.1.1 and have the support of the service areas in Section 1224.15.3…* CBC 1224.18

1224.28 SUPPLEMENTAL SURGERY SERVICES

1224.28.4 Hybrid Operating Rooms.

1224.28.4.1 Space requirements. *Each hybrid operating room shall meet the space, clearance, and storage requirements for the imaging equipment contained in the room and the following:*

1. *Minimum clear floor area of 650 square feet unless the imaging equipment requires a larger area,*
2. *Minimum clear dimension shall be 24 feet unless the imaging equipment requires a larger dimension.*

1224.28.4.2 Control room. *If provided, the control room shall include the following:*

1. *Minimum clear floor area of 120 square feet, which may include fixed work surfaces,*
2. *The room shall be physically separated from the hybrid operating rooms with walls and a door,*
3. *Viewing windows shall be provided with full view of the patient and the surgical team,*
4. *If the control room is adjacent to some other restricted area, it must be physically separated with walls and a door.*

1224.28 SUPPLEMENTAL SURGERY SERVICES

1224.28.4 Hybrid Operating Rooms.

1224.28.4.3 Imaging equipment room. *An imaging equipment room shall be provided for each hybrid operating room.*

1224.28.4.4 Radiation protection. *If the imaging equipment emits ionizing radiation, protection shall be provided in accordance with Section 1224.18.1.1.*

1224.28.4.5 Requirements for specific types of hybrid operating rooms.

1224.28.4.5.1 CT. *Hybrid operating rooms with intraoperative computerized tomography (CT) systems shall have control rooms that comply with Section 1224.18.3.1.*

1224.28 SUPPLEMENTAL SURGERY SERVICES

1224.28.4.5 Requirements for specific types of hybrid operating rooms. *(Cont'd)*

1224.28.4.5.2 iMRI. *Hybrid operating rooms with intraoperative magnetic resonance imaging (iMRI) systems shall comply with the following:*

1. *Space and configuration requirements in Section 1224.18.4, except the clearances shall meet the requirements of Section 1224.28.4.1,*
2. *The control room shall comply with Section 1224.18.4.1,*
3. *The anteroom shall comply with Section 1224.18.4.2,*
4. *Entry doors to iMRI hybrid rooms shall swing outward from inside the room*

1224.28.4.5.3 Vascular imaging. *Hybrid operating rooms with vascular imaging systems shall comply with Section 1224.28.2, including the requirements of Section 1224.28.2.2 for the control room.*

1224.33 EMERGENCY SERVICE

***1224.33.1 Definition**. Levels of emergency care range from initial emergency management as: Standby Emergency Medical Service, with a Physician on call; to definitive emergency care as Basic Emergency Medical Service, with a Physician on duty; to Comprehensive Emergency Medical Service as an Emergency Department.*

Title 22 provides requirements for three different levels of Emergency Medical Service:

- § 70651 – **Standby Emergency** Medical Service, Physician on Call;
- § 70413 – **Basic Emergency** Medical Service, Physician on Duty; and
- § 70453 – **Comprehensive Emergency** Medical Service

CBC Section 1224.33 has been revised to respond to these three levels of Emergency Service and include the Physical Plant requirements for each.

1224.33 EMERGENCY SERVICE

"Definitive emergency care is care that takes place within a dedicated emergency department. This care may range from ***suturing lacerations*** *to* ***full-scale emergency medical procedures****. Facilities that include personnel and equipment for definitive emergency care provide care leading to discharge to the patient's home* ***or*** *admission to the appropriate hospital."* FGI Guidelines

1224.33.2 STANDBY EMERGENCY SERVICE

***1224.33.2 Standby Emergency Medical Service**: If provided, initial emergency management shall be provided in a specifically designated area of the hospital which is equipped and maintained at all times as emergency service space and shall include the following elements:*

***1224.33.2.1 Exterior entrance.** A well-marked, illuminated and covered entrance, at grade level with:*

1. *6-foot minimum clear width opening,*
2. *The emergency vehicle cover shall provide shelter for both patient and the emergency crew during transfer from an emergency vehicle into the building. This exterior entrance shall not be substituted for the required accessible entrance to the hospital, protected from the weather by canopy or roof overhang assigned for passenger loading zone,*
3. *Reception~~, triage and control station~~ shall be located to permit staff observation and control of access to the treatment area, pedestrian and ambulance entrances, and public waiting area.*

1224.33.2 STANDBY EMERGENCY SERVICE

1224.16.2.2 Treatment room. *Standby emergency service shall include at least one treatment room with the following elements:* ~~*The area shall not be less than*~~

1. *120 square feet of clear floor area,* ~~*exclusive of toilet rooms, waiting area and storage.*~~
2. ~~*Each treatment room shall include an*~~ *Examination light, work counter, and handwashing station* ~~*fixtures,*~~
3. *Medical equipment, cabinets, medication storage and counter space for writing,*
4. *The dimensions and arrangement of treatment rooms shall be such that there is a minimum of 3 feet between the sides and foot of bed/gurney and any wall or other fixed obstruction. The treatment may have additional space and provisions for several patients with cubicle curtains for privacy.*
5. *Multiple-bed treatment rooms shall provide a minimum of 80 square feet per patient gurney, with a minimum 8 foot width and 3 feet at the foot of the bed/gurney, with a minimum of 3 feet to any wall or fixed obstruction, and a minimum of 5 feet between patient gurneys. Patient gurneys shall be separated from adjoining cubicles by curtains. Handwashing stations shall be provided for each four treatment cubicles or major fraction thereof in multiple-bed areas.*

1224.33.2 STANDBY EMERGENCY SERVICE

***1224.33.2.3* Storage.** *Equipment and supply storage shall be provided and ~~S~~shall be sized for general medical/surgical emergency supplies, medications and equipment such as ventilator, defibrillator, splints, etc. This storage shall be located out of traffic and under staff control.*

***1224.33.2.4* Lobby.** *Provisions for reception, control, and public waiting, including public toilet rooms with handwashing fixtures, and public telephone.*

> ***Exception:*** *For small and rural hospitals, the reception area may be a multi-purpose area.*

***1224.33.2.5* Toilet rooms.** *Patient toilet room(s) with handwashing fixture(s) convenient to the treatment room(s) shall be provided.*

***1224.33.2.6* Communication.** *Communication connections to the Poison Control Center and local EMS system shall be provided.*

***1224.33.2.7* Observation room.** *A patient cubicle with a minimum clear floor area of 100 square feet shall be provided under the control of a staff work area. The patient bed area shall have space at bedside for visitors and shall have provision for visual privacy from casual observation by other patients and visitors. A handwashing station shall be located in, or convenient to, the observation room/cubicle.*

> ***Exception:*** *For small and rural hospitals, the observation room need not be dedicated solely for that purpose.*

***1224.33.2.8* Airborne infection isolation room** *- If provided, the airborne infection isolation room shall comply with the requirements of Section 1224.4.1.1.*

1224.33.3 BASIC EMERGENCY SERVICE

***1224.33.3 Basic Emergency Medical Service**. When 24-hour basic emergency service is to be provided, a designated service area shall be provided that is staffed and equipped at all times. At a minimum, all the provisions of Standby Emergency Service under Section 1224.33.2 and the following shall be provided:*

***1224.33.3.1 Exterior entrance.** In addition to the requirements of Section 1224.33.2.1, the emergency entrance shall have direct access from public roads for ambulance and vehicle traffic conforming with the requirements of the local authorities having jurisdiction. Entrance and driveway shall be clearly marked. If a platform is used for ambulance discharge, provide a ramp for pedestrian and wheelchair access.*

***1224.33.3.2 Patient access.** Paved emergency access shall be provided to permit discharge of patients from automobiles and ambulances, and temporary parking convenient to the entrance.*

1224.33.3 BASIC EMERGENCY SERVICE

1224.33.3.3 Reception, triage, and control stations. *This area shall be located to permit staff observation and control of access to treatment area, pedestrian and ambulance entrances, and public waiting area.*

1224.33.3.4 Wheelchair and gurney storage. *Shall be located with convenient access from emergency entrances.*

1224.33.3.5 Public waiting area ~~with toilet room facilities, drinking fountains, and telephone.~~ *A public waiting area shall be provided in compliance with Section 1224.4.5 and include provision of public toilet room(s), drinking fountains, and telephone adjacent to the waiting area, dedicated to, and within, the Emergency Service Space.*

1224.33.3.6 Examination and treatment rooms. *~~Shall have a minimum clear floor area… Handwashing fixtures shall be provided for each four treatment cubicles or major fraction thereof in multiple-bed areas.~~ Examination and treatment rooms shall meet the requirements under Section 1224.33.2.2.*

1224.33.3 BASIC EMERGENCY SERVICE

1224.33.3.7 Trauma/cardiac rooms. *These rooms are for emergency procedures, including surgery, and shall have at least 250 square feet of clear floor space. A minimum clearance of 5 feet shall be provided around all sides of the procedure table or gurney. Each room shall have cabinets and emergency supply shelves, image viewing capability, examination lights, and counter space for writing. Additional space with cubicle curtains for privacy may be provided to accommodate more than one patient at a time in the trauma room with a minimum clear floor area of 200 square feet for each patient bay defined by the privacy curtains. There shall be storage provided for immediate access to attire used for universal precautions. Doors leading from the ambulance entrance to the cardiac/trauma room shall have an opening with a minimum width of 5 feet. At least one scrub sink shall be located outside the entrance to each trauma room. One scrub station consisting of two scrub positions is permitted to serve two trauma rooms if located next to the entrance of each procedure room. The placement of scrub sinks shall not restrict the minimum required corridor width.*

1224.33.3 BASIC EMERGENCY SERVICE

1224.33.3.8 Orthopedic and cast work. *~~Provisions may be made in separate room(s) or in the trauma room.~~ At least one orthopedic or cast room shall be provided within the emergency service space. Provisions shall include storage for splints and other orthopedic supplies, traction hooks, image viewing capability, and examination lights. If a sink is used for the disposal of plaster of paris, a plaster trap shall be provided. The clear floor space for this area shall be a minimum of 180 square feet.*

1224.33.3.9 Poison Control and EMS communications center. *Communication connections shall be provided as required under Section 1224.33.2.6. The communications center may be a part of the staff work and charting area.*

1224.33.3.10 Emergency equipment storage space. *Equipment and supply storage shall be provided as required under Section 1224.33.2.3.*

1224.33.3.11 Patient toilet rooms. *A patient toilet room with a lavatory shall be immediately accessible to the treatment room(s). Where there are more than eight treatment bed areas, a minimum of two toilet rooms, with a lavatory in each toilet room, shall be required.*

1224.33.3.12 Storage. *Provide rooms for clean supplies, and for soiled or used supplies*

1224.33.3.12.1 Soiled workroom or soiled holding. *See Section 1224.4.4.7. This room is for the exclusive use of the emergency service space.*

1224.33.3.12.2 Clean utility room. *See Section 1224.4.4.4.6.*

1224.33.3 BASIC EMERGENCY SERVICE

1224.33.3.13 Administrative center or nurses' station for staff work and charting. *These areas shall have space for counters, cabinets and medication storage, and shall have convenient access to handwashing stations ~~fixtures~~. They may be combined with or include centers for reception and communication.*

1224.33.3.14 Staff lounge. *A staff lounge shall be located within the Emergency Department and include staff clothing change areas lockers, showers, toilets and handwashing stations for male and female staff.*

1224.33.3.15 Housekeeping room. *A housekeeping room, compliant with Section 1224.4.15 shall be located within the unit and dedicated to the emergency service space ~~directly accessible from the unit~~.*

1224.33.3.16 Airborne infection isolation room. *If provided, shall comply with the requirements of Section 1224.4.4.1.1 ~~except for separate toilet room, bathtubs or showers~~.*

1224.33.3.17 Secured holding room. *If provide, shall have at least one holding/seclusion room of 120 square feet. This room shall allow for security, patient and staff safety, patient observation and sound proofing.*

1224.33.4 COMPREHENSIVE EMERGENCY SERVICE

***1224.33.4 Comprehensive Emergency Medical Service**. When 24-hour comprehensive emergency service is to be provided, an Emergency Department shall be provided that is staffed and equipped at all times. At a minimum all the provisions of Basic Emergency Service under Section 1224.33.3 and all of the following shall be provided:*

***1224.33.4.1 Triage stations**. In addition to the requirements of Section 1224.33.3.3, the triage area shall include triage stations with the following minimum requirements:*

1. *100 square feet minimum clear floor area for each private triage room and 80 square feet minimum clear floor area for each cubicle in multiple-bed triage areas,*
2. *Provisions for patient privacy,*
3. *Handwashing station in each triage room, or in open triage areas, one handwashing station shall be provided for every four triage bays or cubicles,*
4. *Immediate access to emergency call and code call stations,*
5. *Electrical outlets for clinical areas and medical gas outlets for triage areas in compliance with Table 1224.4.6.1*

1224.33.4 COMPREHENSIVE EMERGENCY SERVICE

***1224.33.4.2 Fast-track area**. A fast-track area may be used for treating patients presenting simple and less serious conditions. If a fast-track area is provided, it shall meet the following requirements:*

1. *Space requirements – each fast-track station shall have a minimum of 100 square feet of clear floor area,*
2. *Each station shall including a handwashing station, work/documentation counter, examination table, and examination light,*
3. *Storage areas for supplies and medication,*
4. *A separate procedure room may be provided. It shall have a minimum clear floor area of 120 square feet*

***1224.33.4.3 Pre-screening stations**. A pre-screening area may be used prior to admission to the Emergency Department. If pre-screening is provided, each station must have a minimum of 80 square feet of clear floor area, a handwashing station, document counter, and a storage cabinet. Pre-screening stations, whether private rooms or open bays, are considered a part of the waiting area and must meet the same ventilation requirements.*

1224.33.4 COMPREHENSIVE EMERGENCY SERVICE

***1224.33.4.4 Diagnostic service areas**. Convenient access to Radiology/Imaging services. The Emergency Department shall be supported by Clinical Laboratory services. A STAT lab may be located within the emergency medical service space in addition to more comprehensive support provided by the Clinical Lab.*

***1224.33.4.5 Administrative center or nurse station.** In addition to the requirements of 1224.33.3.13, decentralized nurse stations near clusters of treatment rooms shall be permitted.*

***1224.33.4.6 On-call rooms.** Provisions shall be made to accommodate on-call sleeping room(s) for physicians and/or medical staff within the Emergency Department. Each on-call room shall include:*

1. *Space for a bed and a chair,*
2. *Individually secured storage for personal items,*
3. *Communication system,*
4. *Accommodations for personal hygiene. At least one toilet, shower, and handwashing station shall be available.*

1224.33.4 COMPREHENSIVE EMERGENCY SERVICE

1224.33.4.7 Security station. *If provided, a security station shall be located near the emergency entrances and triage/reception area, and have a means of observing the public waiting areas and emergency department entrances, including pedestrian and ambulance entrances, as well as a means of controlling access.*

1224.33.4.8 Intensive care. *Provisions shall be made to provide intensive care within the emergency department, or in an adjoining service space, in compliance with Section 1224.29.*

1224.33.4.9 Police and press room. *Provisions shall be made to accommodate police briefing/debriefing and press releases within the emergency department.*

1224.33 EMERGENCY SERVICE

***1224.33.5* Other space considerations**

***1224.33.5.1* Observation units.** *Observation rooms for the monitoring of patients up to 24 hours may be provided as a distinct unit within, or adjacent to, the emergency department. If provided the unit shall have the following:*

1. *Handwashing fixtures…*
2. *Each patient bed area shall have a minimum of 120 square feet of clear floor area including space at each bedside for visitors…*
3. *One patient toilet room shall be provided for each ~~eight~~ six treatment cubicles or major fraction thereof.*
4. *A nurse station positioned to allow staff to observe each patient care station or room that includes a medication room with a sink, lockable cabinet and refrigerator, and a handwashing station*
5. *A nourishment area that includes a sink, work counter, refrigerator, and storage cabinets.*
6. *Clean workroom in compliance with Section 1224.33.3.12.2,*
7. *Soiled workroom in compliance with Section 1224.33.3.12.1,*
8. *Housekeeping room in compliance with Section 1224.4.15, and*
9. *Examination room in compliance with Section 1224.4.4.1.1.*

1224.34 NUCLEAR MEDICINE

***1224.34.1.2 Nuclear medicine room**. When provided, the following facilities shall meet the requirements below:*

***1224.34.1.2.1 Scintigraphy (Gamma Camera) Facilities**. When provided, shall include the following:*

1. *The scanner room shall provide a minimum clearance of 4 feet at each side and the foot of the table.*
2. *Handwashing stations shall be provided throughout the gamma camera suite at locations where radiopharmaceutical materials are handled, prepared, or disposed of.*

Sections added to NUCLEAR MEDICINE

1224.34 NUCLEAR MEDICINE

1224.34.1.2.2 Positron Emission Tomography (PET). *When provided, shall include the following:*

1. *Scanner room shall provide a minimum clearance of 4 feet at each side and the foot of the table. Additional space shall be provided when PET is combined with CT, and include compliance with Section 1224.18.3 and shielding requirements in Section 1224.34.1.1.*
2. *Cyclotron room. Where radiopharmaceuticals are provided on-site, a cyclotron shall be provided. Cyclotron facilities shall be located in access-restricted areas. Shielding requirements shall comply with Section 1224.34.1.1.*
3. *Control room. A control room shall be provided with a full view of the patient in the PET scanner.*

Section added to NUCLEAR MEDICINE

1224.34 NUCLEAR MEDICINE

1224.34.1.2.2 Positron Emission Tomography (PET). *When provided, shall include the following: (cont'd)*

4. *Patient uptake/cool-down room. A shielded room with a dedicated toilet to accommodate radioactive waste and a handwashing station shall be provided.*
5. *Handwashing stations shall be provided throughout the PET suite at locations of patient contact and at locations where radiopharmaceutical materials are handled, prepared, or disposed of.*
6. *Pre-procedure patient care and recovery area shall be provided to accommodate at least two stretchers. This area shall comply with Section 1224.34.2.6.*
7. *Computer equipment room shall be provided in support of the equipment provided.*
8. *Contaminated (hot) soiled holding shall be provided and operationally integrated to minimize incidental exposure to ionizing radiation.*

1224.34 NUCLEAR MEDICINE

1224.34.1.2.3 Single-Photon Emission Computed Tomography (SPECT). *When provided, shall include the following:*

1. *Scanner room shall provide a minimum clearance of 4 feet at each side and the foot of the table.*
2. *Control room. A control room shall be provided with a full view of the patient in the SPECT scanner.*
3. *Computer equipment room shall be provided in support of the equipment provided.*
4. *Handwashing stations shall be provided throughout the SPECT suite at locations of patient contact and at locations where radiopharmaceutical materials are handled, prepared, or disposed of.*

Section added to NUCLEAR MEDICINE

1224.34 NUCLEAR MEDICINE

1224.34.6 Radiosurgery suite. *If radiosurgery (gamma knife/cyber knife) is provided, the following shall be provided:*

1224.34.6.1 General. *The radiosurgery suite shall be located near imaging services to facilitate image acquisition. Location of gamma knife/cyber knife treatment rooms in a radiation therapy suite is permitted.*

1224.34.6.2 Radiosurgery treatment rooms. *The treatment room shall provide a minimum clearance of 4 feet on all sides of the treatment table. The door shall not encroach on the equipment or on the patient circulation or transfer space. A handwashing station shall be provided in each radiosurgery treatment room.*

Section added to NUCLEAR MEDICINE

1224.34 NUCLEAR MEDICINE

1224.34.6.3 Pre-procedure/recovery accommodations. *If provided, pre-procedure/recovery patient care stations shall meet the following requirements:*

1. *The pre-procedure/recovery area(s) shall be immediately accessible to procedure rooms and separate from corridors. Patient care area(s) may be bays, cubicles, or single-bed rooms and shall permit visual observation by staff before and after the procedure.*
2. *80 square feet minimum clear floor area shall be provided at each station where bays or cubicles are used.*
3. *Each bay or cubicle shall have a minimum clearance of 3 feet between walls or partitions and the sides and foot of gurneys or patient beds. Each bay shall have a minimum of at least 4 feet between gurneys or patient beds.*
4. *Patient privacy. Provisions such as cubicle curtains shall be used for patient privacy.*
5. *Handwashing station. A handwashing station shall be provided within the pre-procedure/recovery area.*

1224.34 NUCLEAR MEDICINE

1224.34.6.4 Support areas for radiosurgery treatment rooms. *The following shall be provided:*

1. *Space for sterilization of head-frames*
2. *Area for target planning*
3. *Medication station*
4. *Nourishment area with refrigerator*
5. *Storage for head-frames*
6. *Patient and staff toilet rooms*
7. *Area for sedation for pediatric patients*

1224.34.6.5 Additional support for the radiosurgery device. *The following shall be provided:*

1. *Frame storage may be located at each prep/recovery station.*
2. *Work counter with autoclave for frame pin sterilization*

1224.34.6.6 Support areas for patients in the radiosurgery suite. *If individual pre-procedure positions in cubicles or rooms are provided, separate patient gowning areas are not required. Storage for patient belongings shall be provided.*

1224.39 OUTPATIENT SERVICE SPACE

1224.39.5 HYPERBARIC THERAPY SERVICE SPACE

1224.39.5.1 General. *If provided, clinical hyperbaric oxygen therapy service space shall meet the requirements of the "Hyperbaric Facilities" chapter in NFPA 99: Health Care Facilities Code and shall comply with the following:*

Hyperbaric Oxygen Therapy has become more common as a therapy modality utilizing the delivery of 100% oxygen at a level higher than atmospheric pressure.

Pressure vessels include both single patient (monoplace - **Class B**) chambers and chambers that can house two or more patients at the same time (multiplace - **Class A**).

Section 1224.39.5 has been added to Outpatient Services to accommodate Hyperbaric Therapy services.

Section added to OUTPATIENT SERVICE SPACE

1224.39.5 HYPERBARIC THERAPY SERVICE SPACE

1224.39.5.2 Hyperbaric chambers.

1224.39.5.2.1 Class A chamber (multiplace facilities)

1. ***Clearances.*** *There shall be a minimum clearance of 3 feet around the chamber. The area in front of the chamber entry designed for gurney or bed access shall have a minimum clearance of 8 feet for gurney or bed approach. The area in front of the chamber designed for ambulatory or wheelchair approach shall have a minimum clearance of 5 feet for wheelchair approach.*

2. ***Entries.*** *Chamber entries shall be provided with access ramps that are flush with the chamber entry doorway.*

Section added as HYPERBARIC THERAPY SERVICE SPACE

1224.39.5 HYPERBARIC THERAPY SERVICE SPACE

1224.39.5.2.2 Class B chamber (monoplace facilities).

1. ***Clearances.*** *There shall be a minimum clearance of 3 feet around the chamber and a minimum clearance of 44 inches between the control sides of two chambers. The area in front of the chamber shall be designed for gurney or bed access with a minimum clearance of 8 feet provided for gurney or bed approach.*

2. ***Oxygen.*** *An oxygen service valve shall be provided at each chamber.*

Section added as HYPERBARIC THERAPY SERVICE SPACE

1224.39.5 HYPERBARIC THERAPY SERVICE SPACE

1224.39.5.3 Pre-procedure patient holding areas. *In facilities with a Class A hyperbaric chamber or three, or more, Class B chambers, a pre-procedure patient holding area shall be provided to accommodate patients on gurneys or beds and sitting space for ambulatory patients. The area shall be under visual control of nursing staff and located out of the traffic flow. Each gurney station shall have a minimum clear floor area of 80 square feet and shall have a minimum clearance of 3 feet on the sides and foot of the gurney. There shall be provisions for privacy such as cubicle curtains.*

1224.39.5.4 Medical gas station outlets. *Refer to Table 1224.4.6.1 Station Outlets for Oxygen, Vacuum (Suction) and Medical Air.*

Section added as HYPERBARIC THERAPY SERVICE SPACE

1224.39.5 HYPERBARIC THERAPY SERVICE SPACE

1224.39.5.5 Support areas for the hyperbaric suite.

1224.39.5.5.1 Reception/control desk. *Administrative center/nurse station.*

1224.39.5.5.2 Examination/treatment rooms. *Room(s) for individual consultation shall be provided and meet the requirements of Section 1224.4.4.1.1.*

1224.39.5.5.3 Clean linen storage.

1224.39.5.5.4 Clean supply room. *A clean supply room shall be provided and meet the requirements of Section 1224.4.4.6.1. This room may be omitted if the suite is served by a cart system.*

1224.39.5.5.5 Gas cylinder room. *The gas cylinder room shall have space to house eight "H" cylinders and two gas manifolds, consisting of at least two "H" cylinders on each manifold.*

1224.39.5.5.6 Gurney and wheelchair storage. *Space for gurney and wheelchair storage shall be provided.*

1224.39.5.5.7 Housekeeping room. *A housekeeping room shall be provided and be immediately accessible to the hyperbaric suite.*

1224.39.5.5.8 Compressor room. *A compressor room shall be provided to house chamber compressors, accumulator tanks and fire suppression system.*

1224.39.5 HYPERBARIC THERAPY SERVICE SPACE

1224.39.5.6 Support areas for staff. *Toilet rooms with handwashing stations shall be immediately accessible to the hyperbaric suite for staff use.*

1224.39.5.7 Support areas for patients.

1224.39.5.7.1 Patient waiting area. *A patient waiting area shall be provided meeting the requirements of Section 1224.39.1.*

1224.39.5.7.2 Patient changing rooms. *Changing room(s) for outpatients shall be provided for patient clothing and for securing valuables.*

1224.39.5.7.3 Patient toilet room. *A patient toilet room with a handwashing station shall be directly accessible to the hyperbaric suite.*

2015 CBSC Rulemaking Cycle (2016 Building Code)

9/1/14 – 4/1/15	*Pre-cycle workshops and outreach*
4/1/15 – 4/30/15	*Initial submittal & CBSC review*
7/15/15 - 8/15/15	*Code Advisory Committee meeting*
8/15/15 – 11/15/15	*45-day Public Comment Period*
11/15/15	*Final Documents to CBSC*
12/15/15	*Adoption/Approval*
1/1/16 – 7/1/16	*Publication Period*
7/1/16	*Publication date*
7/1/16 – 1/1/17	*180-Day transition period*
1/1/17	*Effective Date*

Keeping Health Facilities Safe for You. Thank you!

OSHPD

Facilities Development Division

Building Standards Unit
Facilities Development Division
Office of Statewide Health Planning & Development

OSHPD PROPOSED CODE CHANGES FOR THE 2016 CALIFORNIA MECHANICAL & PLUMBING CODES

September 2014

David Castillo
Senior Mechanical Engineer
Building Standards Unit
Facilities Development Division

2016 PROPOSED CODE CHANGES

2013 CMC

325.1.1 The systems shall be designed to provide the temperatures and relative humidity for sensitive areas or rooms shown in Table 325.0. When outdoor humidity and internal moisture sources are not sufficient to meet the requirements of Table 325.0, humidification shall be provided by means of the health-care facility air-handling systems. Temperature shall be individually controlled for each operating and delivery room. Burn unit patient rooms that require humidifiers to comply with Table 325.0 shall be provided with individual humidity control.

2016 CMC

325.1.1 The systems shall be designed to provide the temperatures and relative humidity for sensitive areas or rooms shown in Table 325.0. When outdoor humidity and internal moisture sources are not sufficient to meet the requirements of Table 325.0, humidification shall be provided by means of the health-care facility air-handling systems. Temperature shall be individually controlled for each operating and delivery room. Burn unit patient rooms that require humidifiers to comply with Table 325.0 shall be provided with individual humidity control. All humidifiers shall use dry steam. Humidifiers shall be located within air handling systems or ductwork to avoid moisture accumulation in downstream components , including filters and insulation.

2016 PROPOSED CODE CHANGES

2013 CMC

TABLE 325.0
HEATING, COOLING, AND RELATIVE HUMIDITY REQUIREMENTS FOR SENSITIVE AREAS OR ROOMS

Area or Rooms Designation	TEMPERATURE RANGE[1, 2] °F	RELATIVE HUMIDITY[1, 3] Percent
Operating room	*68-75*	*20-60*
Cystoscopy	*68-75*	*20-60*
Cardiac catheterization lab	*70-75*	*max 60*
Trauma/cardiac room	*70-75*	*20-60*
Delivery room, Caesarean operating room	*68-75*	*20-60*
Gastrointestinal endoscopy procedure room	*68-73*	*20-60*
Post-Anesthesia Care Unit	*70-75*	*30-60*
Newborn nursery	*72-78*	*30-60*
Newborn Intensive-care nursery unit	*70-75*	*30-60*
Intensive care[4]	*70-75*	*30-60*
Burn Unit	*70-75*	*40-60*

2016 CMC

TABLE 325.0
HEATING, COOLING, AND RELATIVE HUMIDITY REQUIREMENTS FOR SENSITIVE AREAS OR ROOMS

Area or Rooms Designation	TEMPERATURE RANGE[1, 2] °F	RELATIVE HUMIDITY[1, 3] Percent
Operating room	*68-75*	*20-60*
Cystoscopy	*68-75*	*20-60*
Cardiac catheterization lab	*70-75*	*max 60*
Trauma/cardiac room	*70-75*	*20-60*
Delivery room, Caesarean operating room	*68-75*	*20-60*
Gastrointestinal endoscopy procedure room	*68-73*	*20-60*
Post-Anesthesia Care Unit	*70-75*	*20 ~~30~~-60*
Newborn nursery	*72-78*	*30-60*
Newborn Intensive-care nursery unit	*72 ~~70-75~~ 78*	*30-60*
Intensive care[4]	*70-75*	*30-60*
Burn Unit	*70-75*	*40-60*

2016 PROPOSED CODE CHANGES

2013 CMC

407.4.1.1 Air supplied to operating rooms, cesarean operating rooms, cardiac catheterization labs, cystoscopy rooms, delivery rooms, and nurseries shall be delivered at or near the ceiling of the area served. In theses areas and in morgues and autopsy rooms all air removed from the area shall be removed near floor level. Exhaust or recirculation inlets shall be located not less than 3 inches (76 mm) nor more than 8 inches (203 mm) above the finished floor, except in morgues and autopsy rooms where all of the exhaust air is removed through an autopsy table designed for this purpose. At least two exhaust or recirculation air inlets shall be used in all cardiac catheterization labs, cystoscopy rooms, operating rooms, and delivery rooms and shall be located not less than 3 inches (76 mm) nor more than 8 inches (203 mm) above the finished floor.

2016 CMC

407.4.1.1 Air supplied to operating rooms, cesarean operating rooms, cardiac catheterization labs, cystoscopy rooms, delivery rooms, and nurseries shall be delivered at or near the ceiling of the area served. In theses areas and in morgues and autopsy rooms all air removed from the area shall be removed near floor level. Exhaust or recirculation inlets shall be located not less than 3 inches (76 mm) nor more than 8 inches (203 mm) above the finished floor, except in morgues and autopsy rooms where all of the exhaust air is removed through an autopsy table designed for this purpose. At least two exhaust or recirculation air inlets of equal capacity shall be used in all cardiac catheterization labs, cystoscopy rooms, operating rooms, and delivery rooms and shall be located not less than 3 inches (76 mm) nor more than 8 inches (203 mm) above the finished floor.

2016 PROPOSED CODE CHANGES

2013 CMC

408.1.5 Filter bank No. 1 shall be located upstream of the air-conditioning equipment. Filter bank No. 2 and filter bank No. 3 shall be located downstream of the supply fan and all cooling and humidification equipment with efficiencies as indicated in Table 4-B or Table 4-C. Exception: Dry steam-type humidifiers for local room humidity control may be installed in the supply air duct downstream of the final filter bank where designs are specifically approved by the enforcing agency.

2016 CMC

408.1.5 Filter bank No. 1 shall be located upstream of the air-conditioning equipment. Filter bank No. 2 and filter bank No. 3 shall be located downstream of the supply fan and all cooling and humidification equipment with efficiencies as indicated in Table 4-B or Table 4-C. Exception: Dry steam-type humidifiers for local room humidity control may be installed in the supply air duct downstream of the final filter bank where designs are specifically approved by the enforcing agency. Dry steam is that which is defined in the ASHRAE HVAC Systems and Equipment Handbook.

2016 PROPOSED CODE CHANGES

2013 CPC

605.3.3.2 [Not permitted for OSHPD 1, 2, 3, & 4] Pressed Fittings. Pressed fittings for copper pipe or tubing shall have an elastomeric O-ring that forms the joint. The pipe or tubing shall be fully inserted into the fitting, and the pipe or tubing marked at the shoulder of the fitting. Pipe or tubing shall be cut square, chamfered, and reamed to full inside diameter. The fitting alignment shall be checked against the mark on the pipe or tubing to ensure the pipe or tubing is inserted into the fitting. The joint shall be pressed using the tool recommended by the manufacturer.

2016 CPC

605.3.3.2 ~~[Not permitted for OSHPD 1, 2, 3, & 4]~~ Pressed Fittings. Pressed fittings for copper pipe or tubing shall have an elastomeric O-ring that forms the joint. The pipe or tubing shall be fully inserted into the fitting, and the pipe or tubing marked at the shoulder of the fitting. Pipe or tubing shall be cut square, chamfered, and reamed to full inside diameter. The fitting alignment shall be checked against the mark on the pipe or tubing to ensure the pipe or tubing is inserted into the fitting. The joint shall be pressed using the tool recommended by the manufacturer.

ITEMS OF DISCUSSION

2013 CMC

326.0 Essential Mechanical Provisions. [OSHPD 1, 2, 3 (Surgical Clinics only) & 4] During periods of power outages essential electrical power shall be provided for the following equipment:

…

326.6 Alarms for airborne infection isolation rooms and protective environment rooms.

2016 CMC

326.0 Essential Mechanical Provisions. [OSHPD 1, 2, 3 (Surgical Clinics only) & 4] During periods of power outages essential electrical power shall be provided for the following equipment:

…

326.6 Alarms for airborne infection isolation rooms and protective environment rooms.

326.7 All cooling systems serving the Technology Equipment Center and Technology Distribution Room.

This page left intentionally blank.

2016 California Building Standards Code Adoption

Office of
Statewide Health Planning and Development OSHPD

Facilities Development Division

The Building Department for California's Hospitals

Hospital Building Safety Board Meeting

September 23, 2014

2016 California Building Standards Code (CBSC 2016)

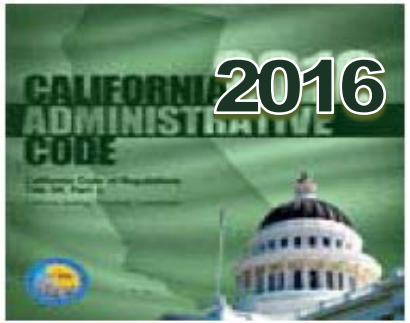

Amendments for the CAC 2016

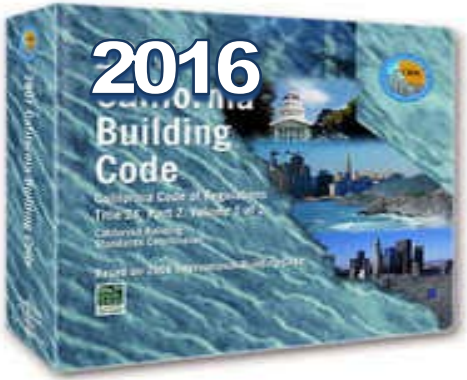

Amendments for the CBC 2016

Objective/Agenda

Allow interested groups or persons opportunities to comment on:

- OSHPD's proposed structural amendments for the CBSC 2016.
- Address Adoption of International Building Code, 2015 (IBC 2015).

CBSC Requirements

1. Do not conflict, overlap or duplicate other Building Standards
2. Remain within the parameters established by enabling legislation
3. Adoption required by public interest
4. Not unreasonable, arbitrary, unfair, or capricious, in whole or in part
5. Cost to the public is reasonable, based on overall benefit to be derived from the building standard

CBSC Requirements

6. Not unnecessarily ambiguous or vague, in whole or in part

7. National standards and model codes are incorporated where appropriate

8. Consistent format with that adopted by the Commission

9. If promoting fire and panic safety, approved by the State Fire Marshall

2015 Triennial Code Adoption Cycle

- Triennial update of CBSC to match 2015 IBC and revised standards

- Effective date 1/1/2017

2015 Triennial Code Adoption Cycle

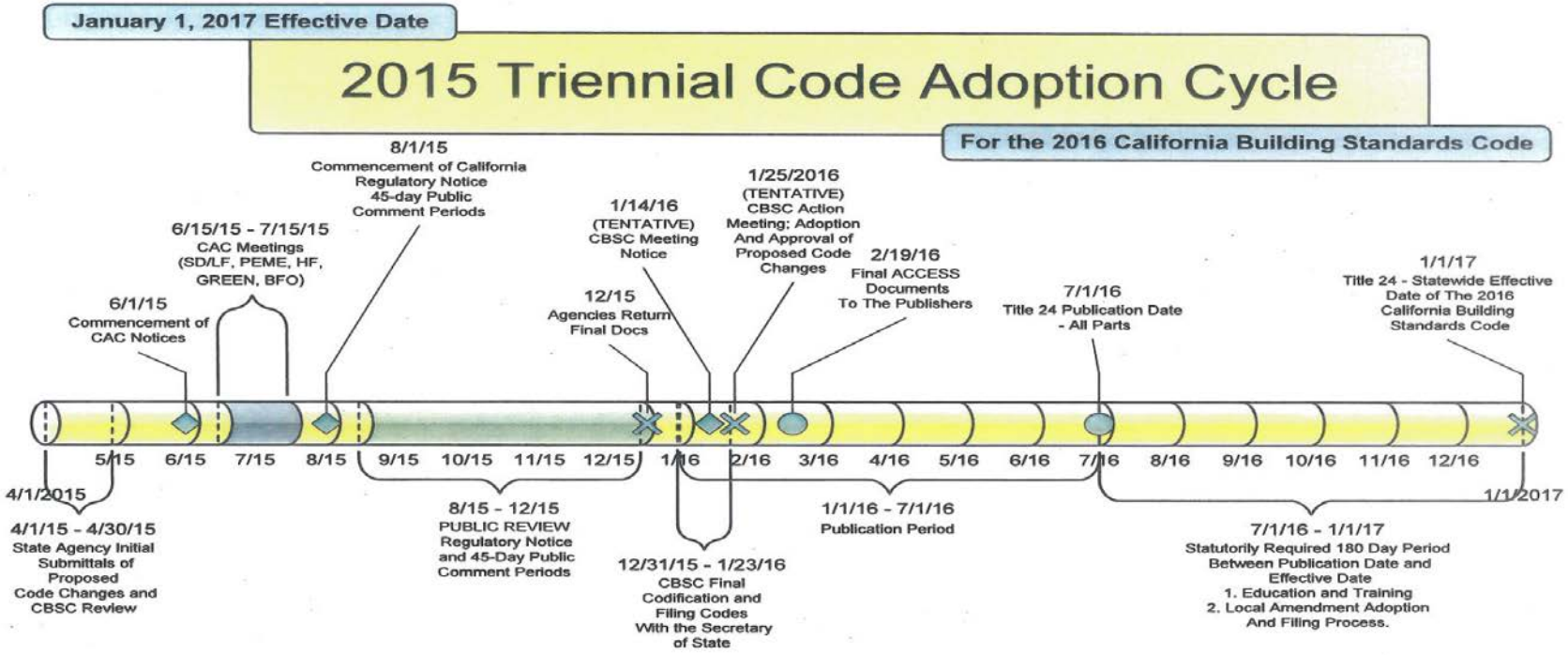

2016 California Building Code

Upcoming Amendments
For
CBC 2016

2016 California Building Code (CBC 2016)

- Only major structural technical changes to the CBC 2016 are presented.

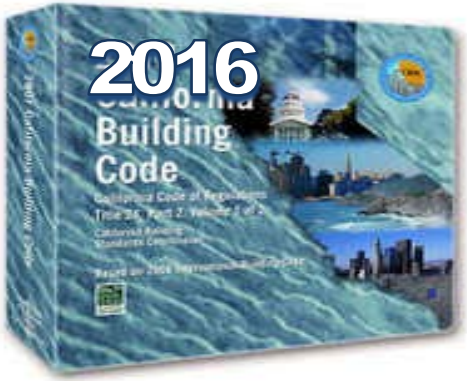

2016 California Building Code (CBC 2016)

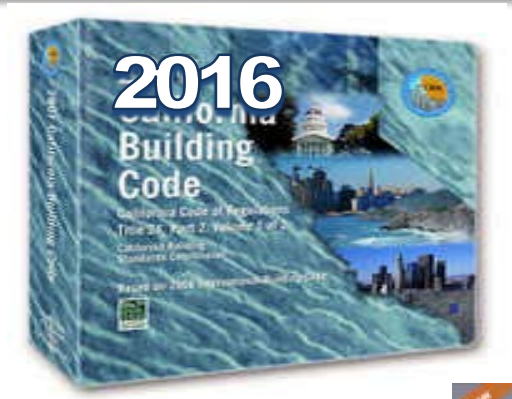

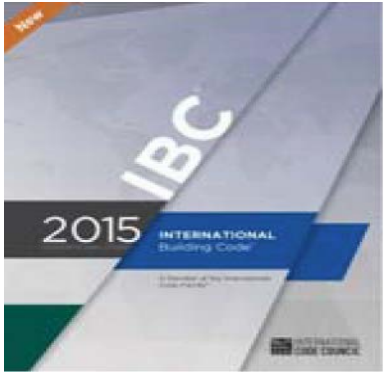

Major Reference Standards NOT Updated

1. ASCE 7-10: Minimum Design Loads
2. AISC 360-10: Steel Design
3. AISC 341-10/358-10: Seismic Design of Steel

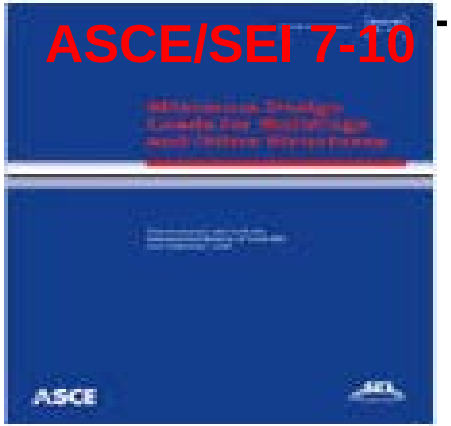

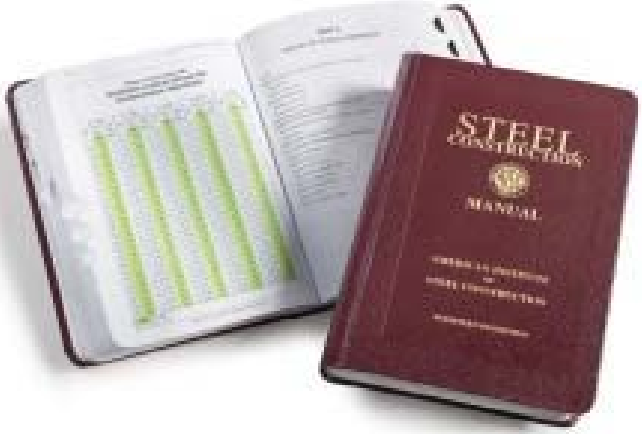

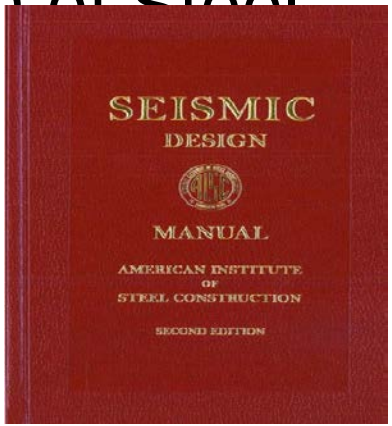

Major Reference Standards Updated

1. ASCE 41-13: Seismic Evaluation and Retrofit of Existing Buildings
2. ACI 318-14: Concrete Design

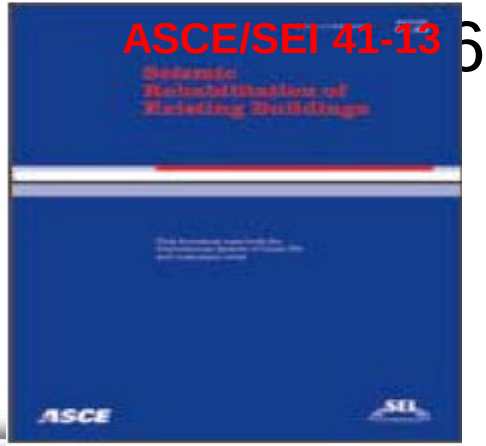

602-13

sign

Major Reference Standards Updated

1. ADM1-15: Aluminum Design
2. NDS-15: Wood Design
3. SDPWS-15: Special Design of Wood

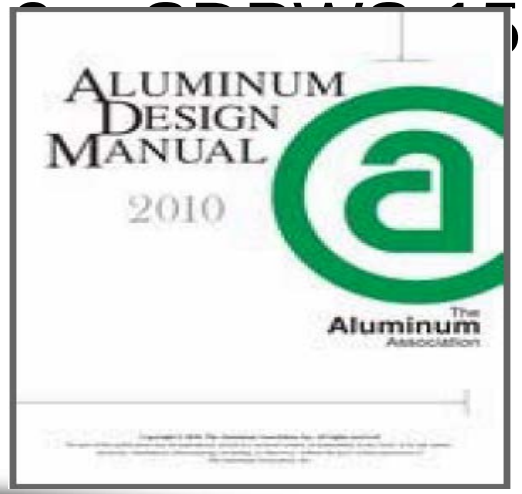

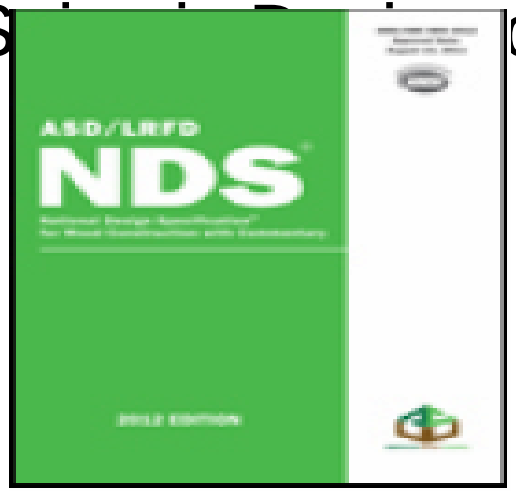

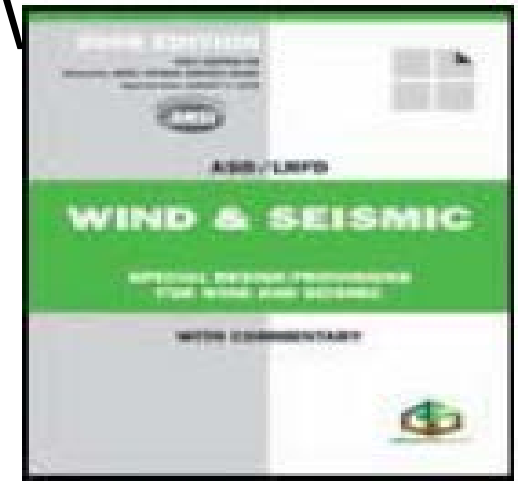

2016 CBC: Design Demand/Forces An Overview

- **No** Changes in seismic hazard maps

  - CBC 2016 will have same ground motions as the CBC 2013.

  - ASCE 7-10 is the basis for ground motions in both the CBC 2013 & CBC 2016.

  - Demand/forces for design in the CBC 2013 & CBC 2016 remain unchanged

2016 CBC: Steel Design
An Overview

- **No** Changes in Steel Design

  - AISC 360-10, AISC 341-10 & AISC 358-10 are the basis for capacity in both the CBC 2013 & CBC 2016

  - SidePlate moment connections will be permitted in accordance with AISC 358-10, Supp. # 2.

2016 CBC: Existing Structures An Overview

- IBC 2015 removed existing structure Chapter 34 from scope.
- IEBC 2015 replaced Chapter 34.
- IBC 2012 Chapter 34 was **17 pages**, IEBC 2015 is **304 pages**!
- OSHPD is proposing to merge Chapters 34 & 34A in the CBC 2013 into one chapter 34A applicable to OSHPD 1, 2 & 4 and not adopt the IEBC 2015.

Reasons for Not Adopting IEBC 2015
An Overview

- IEBC 2015 will greatly increase the complexity of regulations by creating a parallel code to the CBC.

- Much of the IEBC will have to be amended to meet the statutory mandate.

Reasons for Not Adopting IEBC 2015 (Continued)

- IEBC defines “Existing Building” as a building that has a building permit & NOT occupancy

- Significant changes can be made during construction prior to occupancy without complying with the CBC.

Reasons for Not Adopting IEBC 2015 (Continued)

- IEBC 2015 addresses all discipline & NOT just structural. Hence, amendments for all disciplines need to be incorporated into the CEBC.

- CBC 34A amendments for systems, services, utilities, means of egress, removal of general acute care services from buildings need to be incorporated into the IEBC.

- Performance Objective in IEBC (Table 301.1.4.1)

2016 CBC: Special Inspection & Tests
An Overview

- Special Inspections and Tests shall be provided by “Approved Agencies” employed by the Owner (& NOT AOR/SEOR or Contractor):

  - Responsibility for inspection belongs to “Approved Inspection Agencies” and only indirectly to “Special Inspectors”, employed by the agencies.

2016 CBC: Approved Testing and Inspection Agencies

- A testing agency accredited to ISO 17025 shall be deemed to be an "Approved Testing Agency."

- An inspection agency accredited to ISO 17020 shall be deemed to be an "Approved Inspection Agency."

2016 CBC: Certificate of Compliance Requirements

- **"Certificate of Compliance" shall be submitted to the building official** (in addition to the submittal of reports of special inspections and tests):

  - Requirements for "Certificate of Compliance" that used to apply to special seismic certification only is expanded to 7 (seven) different categories.

2016 California Building Code

Major Changes in

CBC 2016

Chapter 16A

Amendments in Chapter 16A Structural Design

Amendments to Chapter 16A Structural Design

- No major change between the CBC 2013 and CBC 2016.

- Design criteria requirement for wind tunnel tests is deleted, since the CBC 2016 adopted ASCE 49-12 for wind tunnel tests (Section 1616A.1.1)

Amendments to Chapter 16A Structural Design

- NFPA 13-16 demand & capacities will be accepted without re-calculations, since they are consistent with ASCE 7-10/ACI 318-14.

Amendments to Chapter 16A Structural Design

- Linear procedure can be used for all base isolated buildings in Seismic Design Category D (Section 1616A.1.38).

CBC 2016 Seismic (S_1) Map

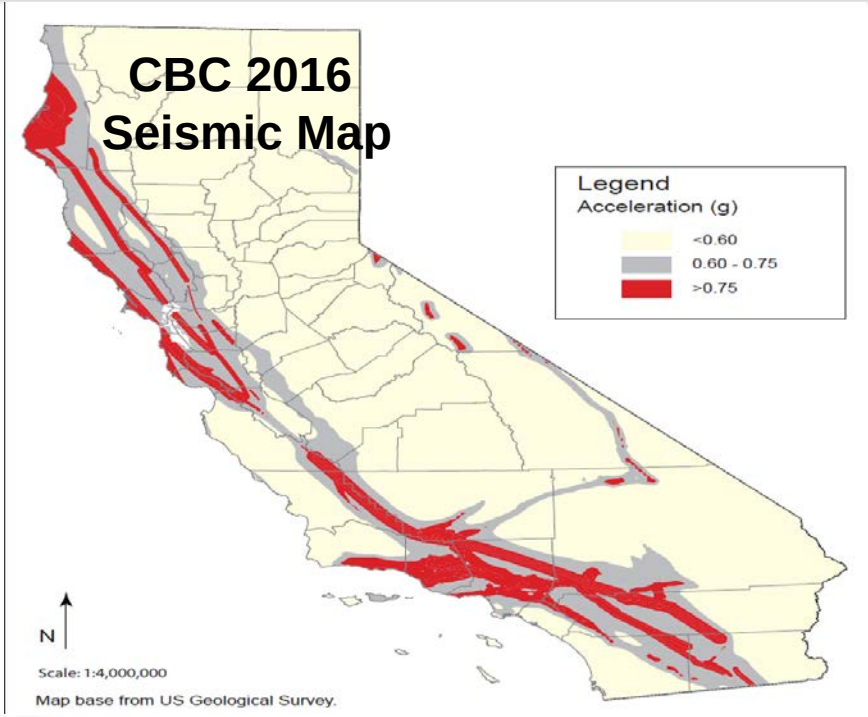

- Base isolated buildings in non-red areas (SDC D) can use linear procedure.

Amendments in Chapter 17 Special Inspection and Tests

Component Requiring Special Seismic Certification

- Requirements in CAC 3-517.40 (B) for special seismic certification requirements for Sub-acute care SNF will be incorporated in the code.

- For Non Sub-acute care OSHPD 2 buildings, Special Seismic Certification requirements shall be limited to life safety components ONLY

Amendments in Chapter 17A Special Inspection and Tests

Certificate of Compliance (Section 1704A.5)

- **“Certificate of Compliance” shall be submitted to the building official**:

1. Fabrication of structural load bearing or lateral load resisting members.

2. Manufacturer’s Certification of non-structural components supports and attachments.

3. Special Seismic Certification of equipment &

Certificate of Compliance (Section 1704A.5)

- **"Certificate of Compliance" Continued:**

4. Pre-Construction tests for shotcrete.

5. Open web steel joist and joist girders.

6. Weldability of reinforcing bars.

7. Mill certs for reinforcing bars.

Exceptions to Special Seismic Certification Requirements

1. *Equipment and components weighing not more than ~~20~~ **50** lbs. supported directly on structures or surface mounted on components not required to have special seismic certification by this section.*
2. *Electric motors, pumps, and compressors up to **20** hp. ~~not more than 10 hp. rigidly supported directly on structures (and not mounted on other equipment or components) with supports and attachments in accordance with this code~~.*
3. *Electrical Controllers, Switches, Transformers, Circuit*

Component Requiring Special Seismic Certification

1. *Emergency and standby power systems.*
2. *Elevator equipment (excluding elevator cabs).*
3. *Components with hazardous contents.*
4. *Exhaust and Smoke control fans.*
5. *Switchgear and Switchboards.*
6. *Motor control centers.*
7. *Radiography and fluoroscopy systems. ~~in fluoroscopy rooms.~~*
8. *CT (Computerized Tomography) systems.*

Component Requiring Special Seismic Certification

9. *Air conditioning units.*
10. *Air handling units.*
11. *Chillers <u>and associated</u> evaporators and condensers.*
12. *Cooling Towers.*
13. *Transformers.*
14. *Electrical substations.*
15. *UPS and batteries.*
16. *Distribution panels.*
17. *Control panels.*

Component Requiring Special Seismic Certification

18. *Power isolation and correction systems.*
19. *Motorized surgical lighting systems.*
20. *Motorized operating table systems.*
21. *Internal communication servers and routers.*
22. *Medical/Lab air and vacuum systems.*
23. *Electrical busways.*
24. *Equipment powered by emergency power system and/or critical circuit.*

Amendments in Chapter 18A Soils and Foundations

Amendments in Chapter 18A

- Provisions for Earth Retaining Shoring and Vibro Stone Columns for Ground Improvement **moved** from Appendix J to Chapter 18A.

- Appendix J is **no longer adopted**.
  - Appendix J was creating perception that entire site grading is in OSHPD jurisdiction.
  - ONLY grading supporting OSHPD regulated facilities (plus 10' outside wall) are in OSHPD jurisdiction and NOT site grading

Amendments in Chapter 18A

- Requirements of Underpinning for protection of adjacent structures explicitly added (Sections 1804A.2 & 1808A.3.2).

  - Requires compliance with Chapter 33: Safeguard During Construction.

  - No more Underpinning Design Criteria/Alternate Means of Compliance!

Amendments in Chapter 18A

- Provision for Steel Sheet Piles shoring are added (Sections 1810A.3.2.3, 1810A.3.5.3.2 & 1810.3.5.3.3).

  - Inspection, monitoring, and observation requirements will be equivalent to those required for installation of shoring with soldier piles & legging (Sections 1812A.6 and 1812A.7).

Amendments in Chapter 19A Concrete

ACI 318-14 is Completely Reorganized

- Each building member (beams, columns, slabs, etc.) has its own chapter.

- Each member chapter includes provisions for cast-in-place and precast, mildly reinforced and prestressed.

ACI 318-14 is Completely Reorganized

- Added information on structural systems and diaphragms.

- All requirements related to construction are in a single chapter.

Allowable Stress Values for Anchors Removed from IBC/CBC

- Allowable stress values for anchors were not based on cracked concrete test

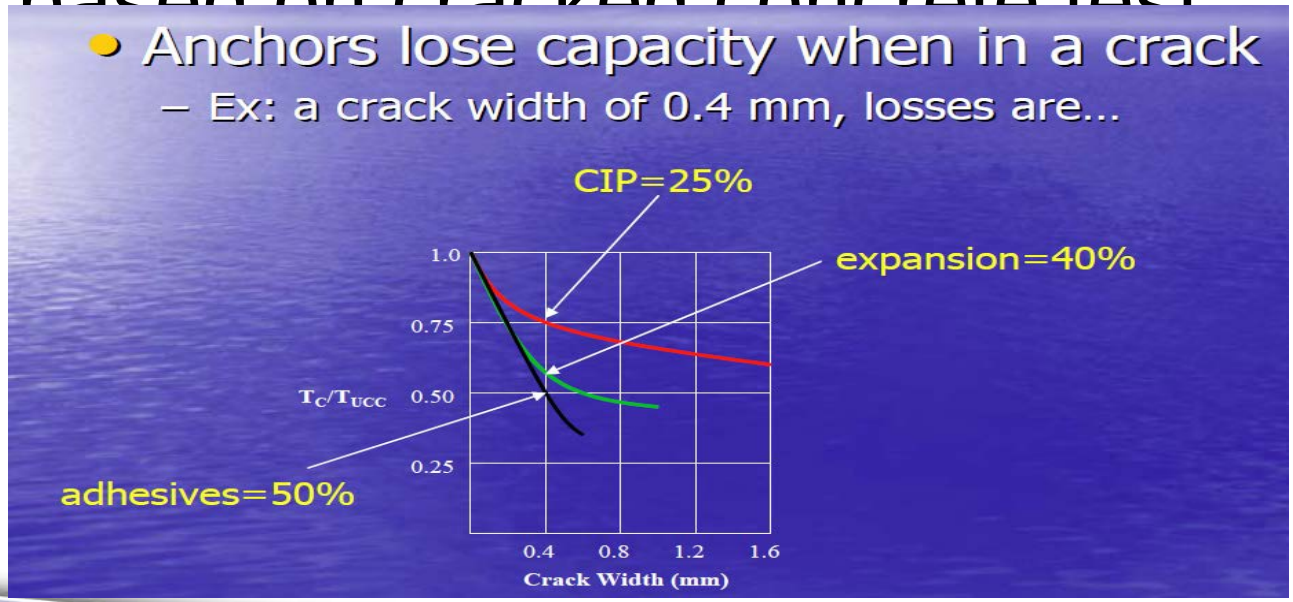

How Post-Installed Anchors Work in Concrete

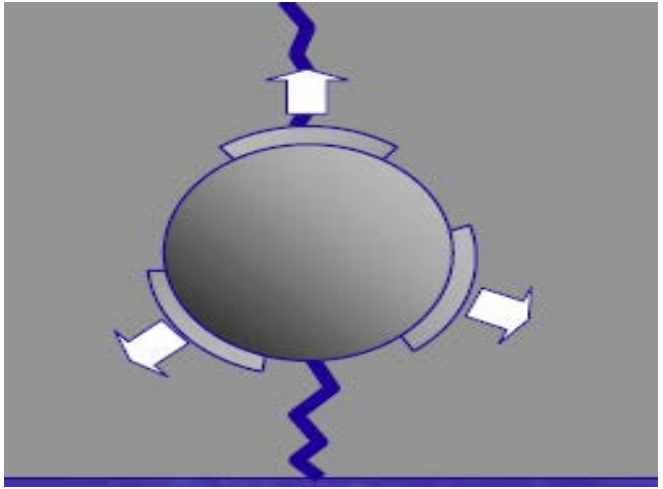

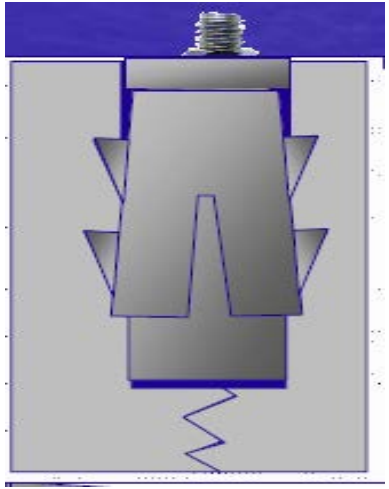

- Tri-Segmented Clips
- Grabs at least two sides of crack
- Distribute loads more uniformly
- Provide Some Redundancy

- 2- Teeth per Segment
- Create ledges when installed

Rebar Requirements

- Rebars without mill certs will require all tests in accordance with ACI 318-14 Chapters 19 and 20 (Section 1705A.3.2)

- Chapter 17A requires “Certificate of Compliance” for weldability & mill certs.

Amendments in Chapter 21A Masonry

TMS 402-13/TMS 602-13

- TMS 402-13 had 14 Chapters vs. 8 Chapters in TMS 402-11.

❖Changes are mostly in format, rather than technical.

Masonry Core Testing Requirements

- Core testing requirements for masonry walls built with single-wythe hollow unit concrete masonry unit is deleted based on Masonry Institute of America (MIA) tests:
  - ❖All single-wythe CMU pass this test.
  - ❖Original requirements was a qualitative tests for multi-wythe masonry, CBC requirement is quantitative and apply to all Masonry.

Glass Unit, Non-Bearing and Screen Walls Requirements

- OSHPD amendments for the Glass Unit Masonry, Masonry Non-bearing and Screen Walls are deleted.
  - Glass Unit masonry is fully addressed in the CBC Section 2110/TMS 402-13.
  - Masonry non-bearing and screen walls can be designed using basic wall design provisions in TM 402-13.

Amendments in Chapter 22A Steel

Amendments in Chapter 22A

- Virtually no change in requirements!
  - Primary reference standards 360-10, 341-10 & 358-10 didn't change from the CBC 2013.

Amendments in Chapter 23 Wood

Amendments in Chapter 23

- NDS-15 & SDPWS-15 are updated.
  - Technical changes are minor.

Amendments in Chapter 34A Existing Structures

Amendments in Chapter 34A: Existing Structures

- IBC 2015 removed Chapter 34: Existing Structures.

  - ❖17 pages in IBC 2012(/CBC 2013) replaced by 304 pages in IEBC 2015.

  - ❖OSHPD is proposing to merge Chapters 34 & 34A into one Chapter.

Chapter 34A: OSHPD 1 & 4 Buildings

- Additions, Alterations, and Repairs can follow <u>one of the three (3) approaches</u>:

1. New Building Provisions: Sections 3403A (Additions), 3404A (Alterations), and 3405A (Repairs)

2. Incidental or Minor Provisions for Nonconforming Buildings: Section 3411A (Permits $I_e = I_p = 1.0$, instead of 1.5)

Chapter 34A: OSHPD 2 Buildings

- Additions, Alterations, and Repairs can follow <u>one of the two (2) approaches</u>:

1. New Building Provisions: Sections 3403A (Additions), 3404A (Alterations), and 3405A (Repairs)

2. ASCE 41-13 based Provisions: Section 3406A

This page left intentionally blank.

OSHPD Office of Statewide Health Planning and Development

Hospital Building Safety Board
400 R Street, Suite 200
Sacramento, California 95811-6213
(916) 440-8453
Fax (916) 324-9118
www.oshpd.ca.gov/Boards/HBSB/index.html

HOSPITAL BUILDING SAFETY BOARD
Administrative Processes and Code Changes Committee

Tuesday, September 23, 2014
10:00 a.m. - 4:00 p.m.

Office of Statewide Health Planning and Development
400 R Street, Suite 452
Sacramento, CA 95811
(916) 440-8453

and

Metropolitan Water District Headquarters
700 N. Alameda Street, Suite 2-500
Los Angeles, CA 90012
(213) 897-0166

Committee Members Present
Scott Karpinen, Chair
John Donelan, Vice-Chair
John Egan
Rami Elhassan
Henry Huang
Bruce Macpherson
Michael O'Connor
Carl Scheuerman
Michael Gritters, Consulting Member

OSHPD Staff
Robert P. David, OSHPD Director
Paul Coleman, FDD Deputy Director
Hussain Bhatia
David Castillo
Glenn Gall
Eric Jacobsen
Mohammad Karim
Roy Lobo
Ramin Sadr

HBSB Staff
Linda Janssen, Executive Director
Cathy Kane
Evett Torres

1. Welcome and Introductions

Committee Chair Scott Karpinen welcomed everyone and invited them to introduce themselves.

2. ASHRAE 170 Presentation – Public Member

Mr. Abdel Darwich of Guttmann and Blaevoet Consulting Engineers gave an overview of the discussions at the American Society of Heating, Refrigerating and Air Conditioning Engineers (ASHRAE) winter and summer meetings in 2014.

Mr. Karpinen noted that OSHPD is seeking to standardize and follow the ASHRAE Standard 170 more in the future.

Mr. Darwich made the following points.

- Kaiser noted that 80% of the visits to exam rooms in outpatient clinics are of consultative nature: the patient comes and chats with the doctor. Kaiser asked the ASHRAE committee if they could use ventilation rates of 62.1 (office space) for the exam rooms, in order to save energy. The committee did not consent. However, Air Changes per Hour (ACH) was reduced from 6 to 4. Kaiser then reported a huge amount of energy savings.
- Kaiser asked about the sources of the ACHs on the table. The answer was that not all are research-based; some are guidance from authorities such as the Centers for Disease Control (CDC), and others are values that have been working for years.

- Kaiser asked to change the ventilation rates in ER and radiology waiting rooms to 62.1 (the rate for lobbies). The committee did not consent because occupants may have undiagnosed communicable respiratory diseases.
- Kaiser asked about thermal comfort in the Standard 170 scope. The committee informed them that Standard 170 does not guarantee compliance with Standard 55 (which has many more requirements).
- Mr. Darwich had requested interpretation on whether Standard 170 allows low ventilation rates for 100% Outside Air (OA) systems. The committee responded that Standard 170 does not differentiate between recirculating systems and 100% OA systems; the latter must meet the total ACH requirements. Mr. Darwich is hoping for more action on this subject.
- A German company had given a presentation on Ultra Clean Ventilation in OR rooms. The concept is used widely outside the U.S. The idea is to treat the OR as a Clean Room. Mr. Darwich stressed that some kind of performance criteria is needed.
- To be consistent with the Facility Guidelines Institute (FGI), the committee approved condensing the current nine laboratory types into one category entitled "lab work area."
- The committee reached a compromise for ACH in labs: six total with two OA. (A note was added that designers can reduce the values using a Z9.5 contract procedure.)
- Hybrid ORs are becoming more and more common, so they want to add requirements. Most of the committee felt that the sterile field on OR tables is the

original position (they can swing 240° and move 4´ each way) where an open wound is most likely to occur.

- The total ACH to the OR does not need to be introduced directly above the surgical table – it is the total ACH in the room.
- An upper limit needs to be placed on the specification that the primary air supply must extend a minimum of 12" from each side of the surgical table, because some designers and architects are taking advantage of the absence of limit.
- For years isolation rooms were not allowed to be switchable between positive and negative. This now applies to all rooms – they must be positive or negative all the time.
- A Task Group to study Natural Ventilation has met for the first time in Seattle.
- A group was formed to clarify the scope delineation between Standard 170 and Standard 62.1.
- ASHRAE has been working for a few years on a position paper about Infectious Diseases. It has been approved by the Directors and published.

Discussion and public input

Mr. Karpinen asked when the next Addendums will be published. Mr. Darwich replied that it would be 2018.

Mr. Gall asked about non-switchable rooms – had anyone brought up changing the pressure by varying the supply air into the room? Mr. Darwich responded that they had not gone into the details. Mr. Gall mentioned that engineers had proposed the idea of

increasing the exhaust to the point that a normally pressurized room or a positively pressurized room would become negative, in order to deal with the decontamination function.

3. 2016 Code Amendments – OSHPD Staff

Mr. Gall reported that Mr. Eric Jacobsen is working on a presentation of the proposals being contemplated for the next code cycle.

Mr. Coleman stated that an issue has arisen regarding adoption of building codes: they are subject to the California Environmental Quality Act (CEQA) process. OSHPD anticipates submitting and RFQ for a CEQA consultant by October 6.

Mr. Jacobsen summarized the code amendments. There are six packages, described below, that OSHPD is looking at bringing forward; they fall into different subsections of Section 12.24.

- 12.24.4 General Construction: Relocate various support areas for common reference from unique service spaces. Existing language would go away (strikeout) and new language is recommended for incorporation (underlined). The following will be moved to this section:
    - Nurse stations
    - Medication prep rooms and self-contained medication dispensing units
    - Nourishment areas
    - Clean utility rooms
    - Clean supply rooms

    - Soiled workrooms
    - Soiled holding rooms

  (Handwashing stations are being viewed as something more than handwashing fixtures; for example, soap dispensing and hand drying are included in the whole package.)

- Anesthesia service space: restructure perioperative support for clarification – it will include preoperative spaces as well. Mr. Jacobsen detailed further proposed changes to the section.

Mr. Scheuerman and Mr. Gall discussed the use of the word “bed” with Mr. Jacobsen. Mr. Gall noted that the National Fire Protection Association (NFPA) language does not distinguish between licensed and unlicensed beds.

An Interested Party pointed out that the word “convenient” is not used consistently. Mr. Jacobsen agreed.

- Supplemental surgery services: addition of a section to deal with hybrid operating rooms. The common modalities are CT, MRI, and vascular imaging. They need the sterile environment as well as the room size to deal with the imaging equipment. Mr. Gall pointed out that there is a definition for “hybrid OR” coming out of Guidelines. Mr. Jacobsen and Mr. Gall explained restricted and semi-restricted areas. Mr. Jacobsen explained further requirements for interventional radiology, operating room floor area, control rooms, imaging equipment rooms, and so on.

- Emergency services: reformat into three tiers – Standby Emergency, Basic Emergency, and Comprehensive Emergency Service – for better alignment with Title 22 physical plan requirements (and coincidentally with FGI Guidelines).

Mr. Scheuerman noted the four categories of activity in the Comprehensive tier. He asked if there were different requirements for the levels in FGI; Mr. Gall replied that FGI doesn't address trauma in that manner.

Mr. Jacobsen explained the changes to Standby Emergency and Basic Emergency. As Basic Emergency is the next tier up, everything in Standby Emergency also occurs in Basic Emergency and that is indicated.

An Interested Party pointed out the decreased use of desk and wall telephones in hospitals and asked about revising the language. Mr. Jacobsen explained that he had to put the requirements of Title 22 into Title 24; the language could be cleaned up a little.

Mr. Donelan asked about putting Waiting Areas into General Construction. Mr. Jacobsen replied that General Construction does include Outpatient Waiting Areas, but there are requirements in Title 22 for the waiting areas associated with Emergency. He would look into moving that section into General Construction.

Mr. Jacobsen stated that the new Comprehensive Emergency Service section will refer back to the previous sections, and contain additional discussions of the

triage stations (modeled after FGI). Mr. Gall requested a clarification to the note on electric outlets. Fast track areas and pre-screening stations are explained (Mr. Gall suggested a note on ventilation). Diagnostic service areas and administrative centers/nurse stations are explained.

Mr. O'Connor asked about the stat lab; Mr. Jacobsen said that he had included it because he wanted something lighter than a full clinical lab. Mr. Scheuerman stated that the code minimum laboratory is basically a stat lab; he would call the lab in question a "reference" lab. He also questioned the use of the word "convenience."

Mr. Jacobsen discussed the placement of doctor sleeping rooms with Mr. Coleman.

The group discussed the use of the room for uniformed services, and the place to brief and debrief the press (possibly to be termed a "consultation" room).

Mr. Coleman asked if an observation unit could be a separate unit from the emergency department. Mr. Scheuerman commented that Sutter uses that arrangement. Mr. Gall commented on the way Licensing views observation beds.

Mr. Karpinen asked about Title 22 requirements for negative pressure exam rooms. Mr. Gall explained that typically a decontamination function is provided

somewhere close to the emergency department; you can get double and triple duty out of that room. There is no absolute requirement.

Mr. Donelan asked about psychiatric observation rooms, which are significantly different. Mr. Jacobsen replied that there is no requirement under Emergency at this point.

- Nuclear Medicine: addition of discussions for gamma camera facilities, positron emission tomography (PET), single photon emission computed tomography (SPECT), and radiosurgery (CyberKnife). Mr. Jacobsen elaborated on the four new discussions.

  Mr. Scheuerman commented that often gamma knife procedures require placement of headgear, and the headgear placement typically occurs in an MRI. The group discussed the need to have headgear placement near imaging services.

- Outpatient service space: addition of a section on hyperbaric therapy services. Since hyperbaric oxygen therapy has become more common as a therapy modality using delivery of oxygen at a higher level than atmospheric pressure, it is being added. Class B is for individual patients and Class A is for multiple patients in the same chamber. Mr. Jacobsen elaborated on the Classes.

Mr. Jacobsen stated that the current rulemaking phase is pre-cycle workshops and outreach. He reviewed the California Building Standards Commission (CBSC) Schedule. The effective date should be January 1, 2017.

Mr. Coleman informed Mr. Scheuerman that the CEQA can progress concurrently with the CBSC process. OSHPD hoped to have the initial CEQA studies done by next April, in order to have a fairly good indication of the direction in which the proposals are going. Mr. Gall added that the CEQA is not part of the nine-point criteria.

Discussion and public input

Mr. O'Connor referred to the perioperative recovery and staff toilet room requirements in smaller facilities. In the perioperative area there are toilet rooms for patients; in a small surgical environment there would be staff changing areas probably located very close to the holding areas. He asked to look at locating staff toilet rooms in proximity to staff changing areas in smaller facilities. Mr. Jacobsen responded that the surgery side is dedicated to surgery; the perioperative side will not be using those toilets. The group discussed the issue of convenience.

Mr. Karpinen opened a discussion on the upcoming meeting schedule combined with OSHPD's revisions. Dr. Karim stated that a meeting is set up with the Structural/Non-Structural Committee next February 4. The Administrative Processes and Code Changes Committee decided to meet again before April 1 to review the Express Terms.

Mechanical Changes

Mr. Castillo presented an initial draft of the proposed mechanical changes using a side-by-side comparison format.

- 325 deals with the humidifier. OSHPD was proposing to take part of the Code Application Notice (CAN) 408 interpretation and place it in the body of the code; this would allow elimination of the CAN. Content on dry steam (and other content as well) actually came from FGI Guidelines.
- Some of the humidity requirements and temperatures are being changed to align with FGI Guidelines.
- For the requirement of two low returns in sensitive area rooms, the verbiage "…of equal capacity…" has been added. Mr. Coleman suggested giving a range of 5 or 10% of capacity.
- The Plumbing section contains a change: it notifies the public that OSHPD intends to allow pressed fittings in OSHPD 1, 2, 3, and 4. Mr. Gall stated that OSHPD will probably carry this as a separate item – sometimes a CEQA is needed.
- Mr. Gall stated that the New Technologies Committee is looking at facility needs and basic building code requirements. There is an emerging need to designate space for dedicated IT rooms. Mr. Gall requested feedback from the group.

Mr. Coleman pointed out the need to define what constitutes a technology equipment center or distribution room. Mr. Gall said it would need dedicated cooling systems.

The group considered Skilled Nursing Facilities (SNFs) and rehabilitation hospitals. Mr. Coleman suggested tying the section back to “equipment required for operations of the facility – Basic Services.”

Mr. Scheuerman noted that Electronic Health Records (EHRs) need to be protected.

Mr. Karpinen noted that hospitals may have small servers throughout the hospital that are on emergency power while the cooling typically is not. Adding split systems or dedicated rooms could cause problems for hospitals.

Structural

Mr. Lobo reviewed the Structural changes.

- California Building Code (CBC) 2016 will adopt the amendments in International Building Code (IBC) 2015, which references American Society of Civil Engineers (ACSE) 7-10. Generally the demands between CBC 2013 and CBC 2016 will be the same.
- Steel will use the same standards.
- Concrete will adopt American Concrete Institute (ACI) 318-14, a complete reorganization from previous versions.
- Wood will use National Design Specification (NDS) 2015.
- Masonry will use The Masonry Society (TMS) 402-13.
- Dr. Karim is adding content on seismic certification: six more items require a Certificate of Compliance.

- International Existing Building Code (IEBC) 2015 adoption will be a substantial change for OSHPD – they may only adopt Chapter 34, and combine 34 and 34A to include OSHPD 1, 2, and 3 in that chapter.

  Mr. Michael Nearman from the California Building Standards Commission (CBSC) stated that the International Code Council (ICC) had preserved Chapter 34 without adding material that would create additional issues. He agreed that the 304-page length of the code made for a legitimate argument. However, whenever there is a national specification available, they are supposed to move to it rather than creating one. He did feel that the list of ordered items that OSHPD had sent the CBSC made sense, and the Commissioners would probably accept it.

  Dr. Karim pointed out that Chapter 34 of IBC 2012 and Chapter 4 of the IEBC are virtually identical. OSHPD was actually following what the statute required by adopting the latest model code – instead of placing it in the International Electrotechnical Commission (IEC), they would be placing it in the CBC.

- OSHPD may be adopting ASCE 41-13 and would use the Tier 3 option for higher-level analysis.

  Mr. Nearman asked if any other supplements would be incorporated. Dr. Karim responded that there were be none for ASE 7; there is one supplement for

American Institute of Steel Construction Inc. (AISC) 358 that OSHPD plans to adopt.

Mr. Coleman stated that there had been discussion on changing the nurse calls requirements in the California Electrical Code (CEC), particularly pertaining to SNFs. Mr. Gall said that it would specifically be the voice requirement from the nurse to the bed.

Mr. Coleman stated that there would be a number of changes in the next CEC.

4. Comments from the Public/Board Members on Issues not on this Agenda

There were no comments on issues not on the agenda.

5. Adjournment

MOTION: (M/S/C/) [Scheuerman/Gritters]

The committee voted unanimously to adjourn.

Mr. Karpinen adjourned the meeting at 12:39 p.m.

Advanced Technology Committee

oshpd Office of Statewide Health Planning and Development

Hospital Building Safety Board
400 R Street, Suite 200
Sacramento, California 95811-6213
(916) 440-8453
Fax (916) 324-9118
http://www.oshpd.ca.gov/Boards/HBSB/index.html

02-21-14

HOSPITAL BUILDING SAFETY BOARD
Advanced Technology Committee

MEETING NOTICE
March 6, 2014
10:30 a.m. — 4:00 p.m.

at the
Office of Statewide Health Planning and Development
400 R Street, Suite 452
Sacramento, CA 95811
(916) 440-8446

And, at the
Metropolitan Water District Headquarters
700 N. Alameda Street, Suite 2-546
Los Angeles, CA 90012
(213) 897-0166

Board Members: Eric Johnson, Chair; Michael Foulkes, Vice Chair; Arlee Monson; Bob Chason; Enid Eck; Bert Hurlbut; Bruce Macpherson; Poki Namkung; Carl Scheuerman

OSHPD Staff: Bill Gow, Gary Dunger, Diana Scaturro, Roy Lobo

HBSB Staff: Linda Janssen, Executive Director; Cathy Kane, Evett Torres

MEETING AGENDA
NOTE: Agenda order is tentative and subject to change without prior notice.

1. **Welcome and Introductions**

2. **Discuss / establish committee goals for 2014. Some potential goals for discussion:**
    - Poll vendors to see what new technologies might be developed and potentially used in hospital systems
    - Request CISCO systems explain their redundancies on critical hospital systems
    - Ensure current code and regulations do not prevent the use of emerging technology in hospital systems
    - FDD staff share with the committee what they are seeing in electronic plan review
    - Discuss the potential for Fire & Life Safety systems that utilize emerging technology
    - Emerging technology for structural systems
    - Assist FDD in determining how technology can be used to improve plan review processes
    - Request "guest speakers" from hospital IT representatives
    - Discussion and Public Input

3. **Establish future meeting dates and times**
    - Discussion and Public Input

4. **Comments from the Public/Board Members on Issues not on this Agenda**

5. **Adjournment**

REMINDER: Please call (916) 440-8453 on Wednesday, March 5th after 3:00 p.m. to confirm that the meeting will be taking place as scheduled. The recording will verify the meeting date and location.

<u>NOTE:</u> Meeting facilities and restrooms are accessible to the physically disabled. If any special accommodations (assistive listening device, sign language interpreter, etc.) are needed, please contact Board Staff at (916) 440-8446. Requests should be made as soon as possible but no later than 3 business days prior to the meeting.

oshpd Office of Statewide Health Planning and Development

Hospital Building Safety Board
400 R Street, Suite 200
Sacramento, California 95811-6213
(916) 440-8453
Fax (916) 324-9118
http://www.oshpd.ca.gov/Boards/HBSB/index.html

HOSPITAL BUILDING SAFETY BOARD
Advanced Technology Committee

Thursday, March 6, 2014
10:30 a.m. - 4:00 p.m.

Office of Statewide Health Planning and Development
400 R Street, Suite 452
Sacramento, CA 95811
(916) 440-8446

and

Metropolitan Water District Headquarters
700 N. Alameda Street, Suite 2-546
Los Angeles, CA 90012
(213) 897-0166

Committee Members Present
Eric Johnson, Chair
Michael Foulkes, Vice-Chair
Burt Hurlbut
Bruce Macpherson
Arlee Monson
Poki Namkung
Carl Scheuerman

OSHPD Staff
Paul Coleman, Deputy Director
Gary Dunger
Bill Gow
Roy Lobo
Diana Scaturro
Ali Sumer
Chris Tokas

HBSB Staff
Linda Janssen, Executive Director
Cathy Kane

1 **1. Welcome and Introductions**

Committee Chair Eric Johnson welcomed the participants to the first meeting of the Advanced Technology Committee. The participants in Sacramento and Los Angeles introduced themselves.

2. Discuss/establish committee goals for 2014. Some potential goals for discussion:

- **Poll vendors to see what new technologies might be developed and potentially used in hospital systems**

Mr. Johnson stated that much of the new technology emerging into health care does not quite have a place in regulation, code, or understanding of its operation. This committee provides a place to flesh out regulations that do not compete or conflict with operational technologies.

Mr. Scheuerman broke down the categories of health care technologies.

- Clinical diagnostic and therapeutic
- Clinical IET systems
- Business IT applications
- Building system management (‘smart” buildings)
- Integration of system management controls
- Building Information Modeling (BIM)

An Interested Party added that on the consumer side, there are personal devices coming into the facilities. The committee needs to consider whether these technologies will be allowed or suppressed. This environment is less controlled.

- **Request CISCO Systems explain their redundancies on critical hospital systems**

  Mr. Johnson reported that he had reached out to CISCO Systems to discuss redundancies in their systems, and how they address it in other states and other parts of the world. These technologies need to be well-designed into a facility. The infrastructure needs to have enough back-up systems and redundancy that systems can continue to function. He added that electronic health records are now a huge portion of patient care. We may wish to invite a CISCO representative to attend an upcoming committee meeting to share information with us.

- **Ensure current code and regulations do not prevent the use of emerging technology in hospital systems**

  Mr. Johnson asked the audience about any conflicts upfront regarding permitting documents and/or finishing projects.

  An Interested Party described a problem at Scripps Health with First Responders needing to be able to communicate in elevators and stairwells which lack wireless connectivity. This leaves a huge communications hole in the building.

  Mr. Dunger responded that the 2013 California Building Code and Fire Code now require Emergency Responder radio-covered systems (repeaters and amplifiers) to be installed in every new building. Mr. Scheuerman pointed out the potential for radio-frequency (RF) conflicts walking in the front door in people's pockets.

The Interested Party suggested for a committee member to contact Ed Cantwell, Executive Director of West Health in San Diego. The company has recently set up a center for medical interoperability for devices to go through certification.

- **FDD staff share with the committee what they are seeing in electronic plan review**

Mr. Gow, a member of the OSHPD Rapid Review Unit (RRU), stated that electronic plan review holds difficulties and challenges compared with paper review; however, it also offers efficiencies and improved turnaround times. Quality can vary. One limitation with electronic review is that during electrical review point-to-point circuit checks, panel schedules are on one sheet and the power plan is on another.

Ms. Scaturro stated that from a technical reviewer's standpoint, electronic plan review has been an adjustment – it is not as intuitive as flipping page-to-page. The RRU reviewers now work with two large screens and a third screen in the center to pull up database files or to type notes.

Benefits are that the work can be shared electronically among the reviewers; blueprints, data, and comments no longer disappear. Also, slipsheets can be inserted for clients.

Mr. Gow added that the RRU is not stuck with just two sets of paperwork; multiple reviewers can work simultaneously.

Interested Parties from John Muir Health and CO Architects related successful experiences working with electronic plan review.

Mr. Coleman stated that FDD is still developing electronic plan review and doing pilot programs. FDD is also developing electronic over-the-computer reviews – the counterpart of over-the-counter reviews – which make use of SmartBoards.

Mr. Coleman continued that Virtual Plan Review involves most of the drawings being done in a 3D electronic model. The program developers and the designers must agree to use some standard conventions so that the program will get the right information to read.

For Electronic Plan Review, issues have to do with file sizes, where files are stored, how robust the systems are, etc. OSHPD seeks to increase electronic plan review to projects greater than $175,000. There is also the electronic signature hurdle.

Mr. Coleman raised an issue regarding accessibility of medical records after a disaster. What is required to maintain continuing operations if medical records are retained in electronic format? Should hospitals be required to retain hard-copies of the medical records as well?

Mr. Scheuerman stated that the essential health record for the acute facility needs to be seen in context with the trend toward population health management.

Mr. Coleman summed up that the committee needs to determine the correct level of regulation to ensure that the statute is met that requires hospitals to be capable of continuing operations. Mr. Johnson encouraged the meeting participants working in health care to suggest local experts who can educate the committee on the way hospital records are created for individuals when they walk into a hospital. What is the common practice of health care providers? An initial goal of the committee will be to educate the members in many such areas.

Mr. Tokas raised the issue of dealing with multiple platforms. At some point, FDD will have to make a decision internally to go with one in particular. This committee will provide tremendous help as FDD attempts to dissect the various existing platforms.

The committee discussed the unique Bluebeam product currently in use, along with other potential software.

- **Discuss the potential for Fire & Life Safety systems that utilize emerging technology**

Mr. Johnson stated that there is a lot of integration between fire alarm / life safety / building management systems. Again, he thought of inviting speakers from the industry to talk about where the fire manufacturers are putting their future capital and how that is meant to integrate with the building management system. The controls

are being handed over to the IT department – collections of systems now end up on the same patch panel.

Peter Spadia, an Interested Party from John Muir Health, stated that this was his area of expertise. In his experience, the network pathway is controlled by the IT department while the building systems are controlled by the engineering department. They don't really talk to each other about what the control system is doing.

Mr. Spadia felt that integration is starting to take off. The demand response requirement is being driven by the California Independent System Operator (ISO). Building control systems are going to have to become DR-compliant. Lighting controls are where this is taking off, especially in the 2014 code – you will basically need a standalone system for lighting, and you can integrate it to the VMS. Mr. Spadia elaborated on how the code and the energy grid play in.

Mr. Coleman stated that there are provisions in the Mechanical Code for reducing systems when spaces or rooms are unoccupied. It requires a fairly sophisticated building management system to do what the code requires; certain levels have to be maintained and so forth. Much of this is done electronically using IT equipment.

Mr. Spadia noted that hospitals are extremely energy-intensive and power costs are huge; if costs can be brought down 15%, 20%, especially with the renewable requirement of 33% from Cal ISO, asset managers are motivated to go that route.

Mr. Macpherson referred to the paradigm shift in progress as ITs start to take over and look for electronic ways to reduce facility costs. At a higher level as the committee goes into these discussions we need to keep this shift in mind. It is being driven by federal regulations, state regulations, and technological advances. The committee faces a daunting task in trying to make sense of how all these pieces intersect.

Mr. Monson observed that conversations that begin with the design of systems can quickly slip into operation of systems. The dividing line, particularly with regard to jurisdiction or regulation, is hard to distinguish.

- **Emerging technology for structural systems**

Mr. Tokas mentioned that FDD quickly learns of emerging technologies for structural systems because of its participation in various committees up to the national level. FDD also has a group that works on alternate methods of compliance. Mr. Tokas remarked that it will be useful to present all this information to the committee: what's new, what's innovative, how it can be utilized for better performance in hospitals.

Mr. Lobo noted that many times, FDD asks for testing of systems that have not been tested before. But if the manufacturer wants to promote a new technology – either a structural or nonstructural system – getting testing or getting into the codes and standards enables OSHPD to adopt those latest technologies automatically.

- **Assist FDD in determining how technology can be used to improve plan review processes**

Mr. Johnson noted that the use of color coding in electrical plans has been a huge timesaver. This Best Practice of differentiating branches of power in different colors, although not actually a new technology, has greatly promoted efficiency.

Mr. Scheuerman broached the question of how to leverage technology benefits for field observation and operations. Further, is there a way to strengthen the observation function while expediting the function and ensuring its reliability? The California Pacific Medical Center (CPMC) project will be exploring ways to accomplish those objectives.

An Interested Party added that 3D models can now be done in something like SketchUp. It is easier to manipulate and maneuver, and enables the Plan Reviewer to understand the geometry of the building.

Ms. Scaturro commented that after about 25 sheets to a drawing set, it becomes cumbersome to look at the drawings. This puts a limit on the scope of electronic review projects. She expressed interest in looking at workstations and hardware configurations used by design professionals and drafters.

Mr. Coleman agreed with the effort to move electronics to the field side of the equation, so that people don't have to carry large plans around on the job. The biggest issue now is control of the documents: ensuring that everyone is working off

of the approved documents. Mr. Coleman offered the idea that FDD could develop association with several outfits that provide cloud storage; applicants could place their drawings in the FDD cloud, as opposed to using a cloud set up by the owner or the owner's design team.

He added that staff is using a number of different devices and programs out in the field. The right hardware needs to be settled upon; it needs to be compatible with what is happening in the industry.

The Interested Party pointed out that many of the projects have buildings that are so large, they have to be sectioned into quadrants. This can create problems for electrical, mechanical, and plumbing reviews – trying to chase a line that goes on and on among quadrants. The Interested Party suggested for FDD to have the ability to put it all on one PDF. Users could look at the big picture or zoom in for detail.

Mr. Scheuerman pointed out the importance of version control integrity. A session should have a particular identity. Mr. Monson noted that the size of the CPMC project demands more than one session. The software has limitations in its ability to host the size of the files; sessions would provide some control.

An Interested Party stated that at Scripps, many owners have established their own BIM standards. They are looking at what works for them. However, that creates variation for OSHPD. The Interested Party felt that it would be a good idea to

establish the BIM standards as a state standard in order to facilitate electronic review.

Mr. Coleman responded that establishing statewide BIM standards would be a monumental task. He agreed that some standardization of format is needed, however, especially if OSHPD is going to set up some clouds to which people will need to send their drawings. The Interested Party offered to share the Scripps BIM.

Mr. Monson noted that as part of the pilot projects, they are collecting comments from the reviewers. That information could be provided for at least minimum standards that affect the review. Mr. Tokas noted that the session held with the CPMC had been very beneficial in terms of hearing reviewer responses.

Mr. Coleman commented that if a large project is going to go through electronic plan review, the decision has to be made initially when the drawings are actually being developed, not when they are being prepared for submittal. An initial meeting should be held with OSHPD about the drawing package and the expectations.

- **Request "guest speakers" from hospital IT representatives**

Mr. Johnson extended a request for speakers who would be well-suited to educate the committee. An Interested Party suggested enlisting input from clinical engineering people at the hospitals. They can impart not only IT information but also clinical technology.

Mr. Johnson hoped to have speakers beginning with the next meeting. He saw the committee's work in two pieces:

- The hospital industry – its technology and functioning
- Electronic review – platforms and means of document control.

He felt that the committee would be in discovery mode for the next few meetings to discern what they don't truly understand yet.

Mr. Coleman offered to have the OSHPD lead mechanical engineer come to the next meeting, to speak on what is currently provided in the code as far as reduction of systems when space is unoccupied. (Mr. Spadia stated that patient rooms are controlled by admissions; that is how they are looking to integrate with the electronic record.)

(4.) Comments from the Public/Board Members on Issues not on this Agenda

An Interested Party from John Muir Health emphasized the huge value to that organization of interactive reviews. All projects are looking to go fast. Local municipalities can charge a premium to provide an extra level of service; with OSHPD's current funding challenges, he suggested for the committee to explore having OSHPD do the same.

Mr. Coleman noted that Collaborative Review is already at a higher fee than the standard review. However, many of OSHPD's fees are locked in statutorily. OSHPD can work with applicants to help them find a way to accomplish their goals.

The Interested Party suggested having a higher fee structure available for smaller projects as well as large.

An Interested Party from Toshiba America Medical Systems addressed imaging systems, a major focus of the code. That organization is having a difficult time understanding FDD interpretations relating to newer technologies that are coming out, specifically related to things such as PET-CT and IVR-CT.

Mr. Scheuerman responded that they want to be sure to differentiate between the things affected by Title 24 versus Title 22.

Mr. Coleman noted that the Administration Processes and Code Committee may also be appropriate for topics such as this.

The Interested Party suggested for OSHPD to be more proactive with what's coming – her company had found out the hard way about the change in language related to radiology and fluoroscopy systems.

(3.) Establish future meeting dates and times

The committee tentatively established Wednesday, April 9 at 10:30 for the next meeting.

5. Adjournment

The committee adjourned at 12:10 p.m.

This page left intentionally blank.

oshpd Office of Statewide Health Planning and Development

Hospital Building Safety Board
400 R Street, Suite 200
Sacramento, California 95811-6213
(916) 440-8453
Fax (916) 324-9118
http://www.oshpd.ca.gov/Boards/HBSB/index.html

11-6-14

HOSPITAL BUILDING SAFETY BOARD
Advanced Technology Committee

MEETING NOTICE
November 17, 2014
10:30 am to 4:00 pm

at the
Office of Statewide Health Planning and Development
400 R Street, Suite 452
Sacramento, CA 95811
(916) 440-8446

and, at the
Metropolitan Water District Headquarters
700 N. Alameda Street, Suite 2-546
Los Angeles, CA 90012
(213) 897-0166

Board Members: Eric Johnson, Chair; Michael Foulkes, Vice Chair; Arlee Monson; Enid Eck; Bert Hurlbut; Bruce Macpherson; Poki Namkung; Carl Scheuerman

Consulting Member: Joe LaBrie

OSHPD Staff: Hussain Bhatia, Gary Dunger, Diana Scaturro, Glenn Gall

HBSB Staff: Linda Janssen, Executive Director; Cathy Kane, Evett Torres

MEETING AGENDA

NOTE: Agenda order is tentative and subject to change without prior notice.

1. **Welcome and Introductions**

2. **Review and approve March 6, 2014 meeting report**
   - Discussion and Public Input

3. **Discuss the possible name change of the committee**
   - Discussion and Public Input

4. **Presentation of "CEC Micro Grid Technology Demonstration Project" by David Bliss and Peter Spadia, Charge Bliss, Inc.**
   - Discussion and Public Input

5. **FDD presentation on Electronic Plan Review by Paul A. Coleman, FDD Deputy Director**
   - Discussion and Public Input

6. **Discuss using a workshop for the next meeting to involve industry to demonstrate future trends**
   - Discussion and Public Input

7. **Establish future meeting dates**
   - Discussion and Public Input

8. **Comments from Committee Members and the Public on issues not on this agenda**

9. **Adjourn**

REMINDER: Please call (916) 440-8453 on Friday, November 14th after 3:00 pm to confirm that the meeting will be taking place as scheduled. The recording will verify the meeting date and location.

NOTE: Meeting facilities and restrooms are accessible to the physically disabled. If any special accommodations (assistive listening device, sign language interpreter, etc.) are needed, please contact Board Staff at (916) 440-8446. Requests should be made as soon as possible but no later than 3 business days prior to the meeting.

The Roadmap to Sustainability and Savings

Each step saves valuable capital,
increases energysystem resiliency and redundancy,
*moves Hospitals towards **100%** renewability,*
and can be paid for through savings!

Charge Bliss
Intelligent Power. Delivered.

OPTIMIZING THE ENERGY ECOSYSTEM

California Energy Commission (CEC) PON-14-301

Parameters

- **"Demonstrate secure, reliable microgrids…to build resilient, low-carbon facilities and communities."**
  - www.energy.ca.gov/contracts/index.html
- **Group 1: Microgrids for *Critical Facilities***
  - **Photovoltaic generation**
  - **Advanced Energy Storage (Battery Systems)**
  - **Smart Power Conditioning**
  - **Active building management**
  - **Microgrid Controller**

Technical

- System:
  - 250-500kW Photovoltaic (SunPower™ preferred), 800-1500kWh GE Durathon™ batteries, Princeton Power inverter/converters (BIGI250™)
    - ***May be able to administer CoGen and allow it to run when Grid sags or fails (Grid-interactive rather than Grid-tied).***
  - Charge Bliss building management controller:
    - Set building conditions/tolerances
    - Optimize discretionary systems
  - OSIsoft/PI server/NREL simulation- analytical tools for microgrids- develop controller for all aspects of microgrid operations
  - Professor de Callafon (UCSD PhD in signal processing and microcontrol design will use data to build comprehensive microgrid controller systems
- Productivity:
  - up to 63,875kWh/mo or 765,000kWh/yr
  - Mitigate up to 200kW demand for 12 hours

charge bliss
Intelligent Power. Delivered.

Technological Advances for Muir

CURRENT

- Building management algorithms limited
  - Lack of coordination between device families can lead to stacking
  - No demand response capability
- CoGen cannot operate when Grid goes down (Grid-tied)
  - Lose significant generation- must use backup GenSet
- Cannot determine timing, quality, efficiency, and overall profile of individual and collective loads

CB MICROGRID

- Automated, reliable system optimization
  - Same tolerances, but improved efficiency
  - Automated Demand Response (ADR)
- Potentially Administer Cogen (Grid-interactive)
  - Keep on-line when Grid sags
  - Store excess generation
  - Head towards minimal Grid reliance
- Monitor nearly unlimited number of devices and circuits to understand system functions, detect or predict diminished performance, and increase efficiency

charge bliss
Intelligent Power. Delivered.

Team

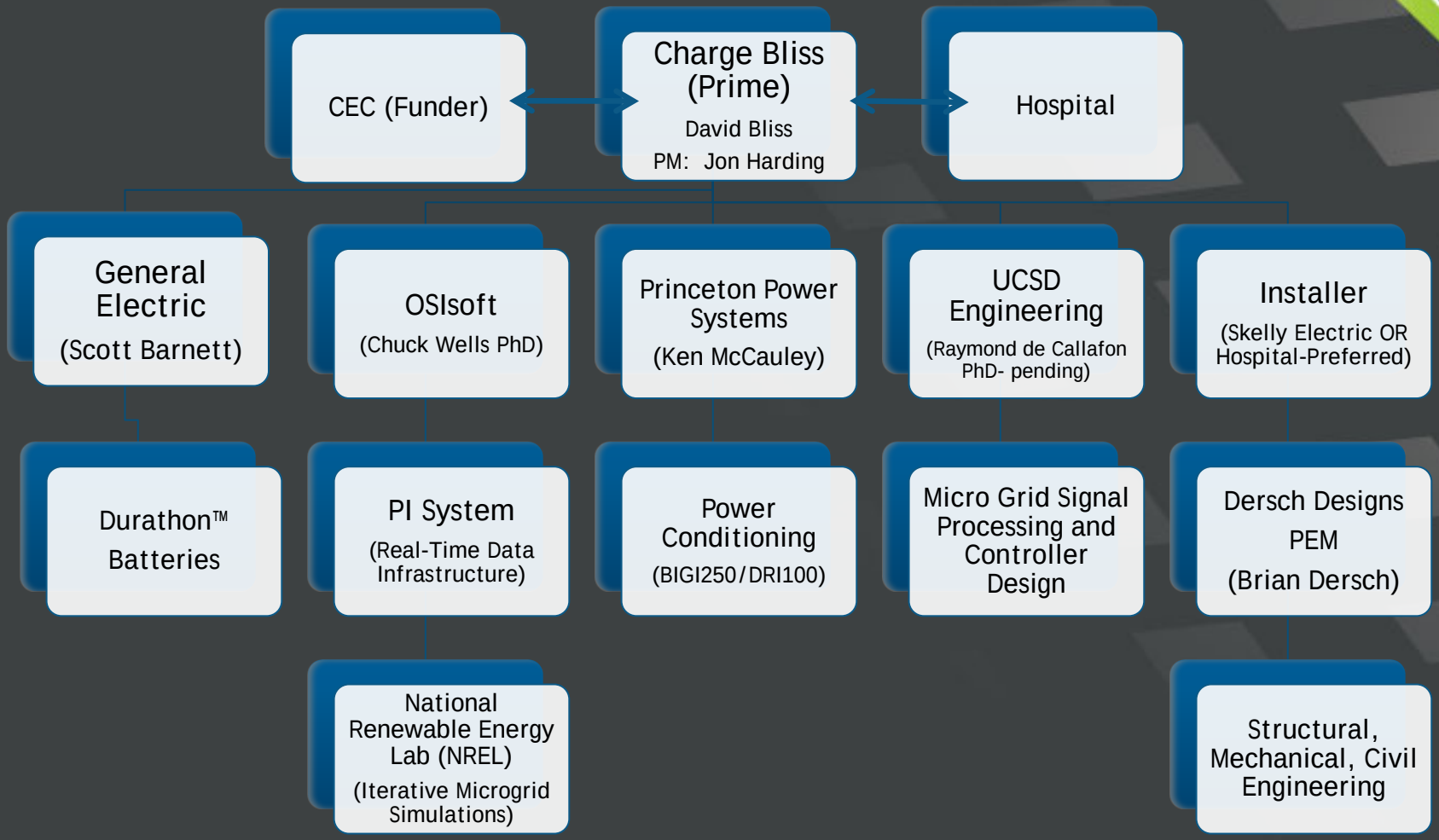

=World class, redundant design, engineering, and performance.
All hardware UL approved

Intelligent Power. Delivered.

Project Timetable [Parts in Parallel]

CEC

- Proposal submission: Nov. 3, 2014 (delayed, date indefinite)
- Notice of Proposed Award (NOPA): 1/11/15 (likely delayed)
- CEC meeting date: 04/2015
- Agreement start: 05/2015
- Agreement end: 3/31/18

Design

- Hospital data acquisition- 1-2 months PRIOR TO NOPA
  - 12 month demand and usage profiles (Utility + Cogen)
  - Understand existing building management system
- Analytics and Preliminary engineering-
  - Proposed system sizing, site location(s), interconnection (3 months) and design review and modification with Hospital (3 months)
  - OSHPD review (2 months- statutory)
- Legal Agreements- 2-3 months
  - Scope of work, subcontractors, project schedule, performance metrics (CB + Hospital)
  - Operation and maintenance (negotiate cost < value of energy to Hospital)
- Final engineering- 6-9 months
  - Electrical/Structural: Charge Bliss, GE, PPS, OSIsoft, UCSD, Dersch and Hospital (3 months)
  - OSHPD secondary review- 2 months
  - Build (materials acquisition, permitting, installation, and commissioning)- 4-6 months

ESTIMATED DATE OF COMMISSIONING: JULY 2016

charge bliss
Intelligent Power. Delivered.

Regulatory Expectations

- OSHPD
  - Site equipment on non-OSHPD governed property (parking lots, administrative buildings, other)
  - Partner with OSHPD throughout
    - Already in active discussion with Dell Kirkish, Glenn Gall, Corey Hirutsuka and reaching out to Les Wong
    - ***Have verbal assurances that our proposed designs will trigger minimal OSHPD oversight***
    - Provide preliminary drawings for review PRIOR to NOPA and "final" designs prior to contracting
- PGE/CAISO
  - CB Microgrid is grid-interactive
    - Able to island AND resynchronize with Grid (***COMPLIANT WITH CPUC RULE 21, IEEE 1547, AND IEEE 2030.7***)
    - Can elect to be "zero-export" or NEM
    - Microgrids being pushed by CEC and CPUC both of whom have governance over PGE
  - CAISO participation- payment for participating in Grid power quality

charge bliss
Intelligent Power. Delivered.

Load Items

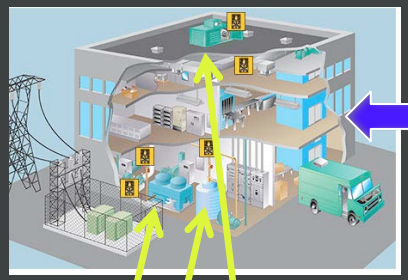

Principles:

1. Charge Bliss Controller monitors and administers discretionary load items
2. OSI/PI Server iterative analytics with NREL, builds microgrid controller
3. Clean energy made, stored, distributed to optimize entire "ecosystem"

Charge Bliss Controller

Photovoltaic

PI Server

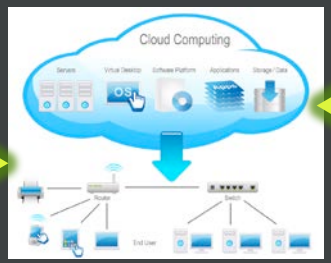

NREL

OSIsoft.
Infrastructure

General Electric Batteries

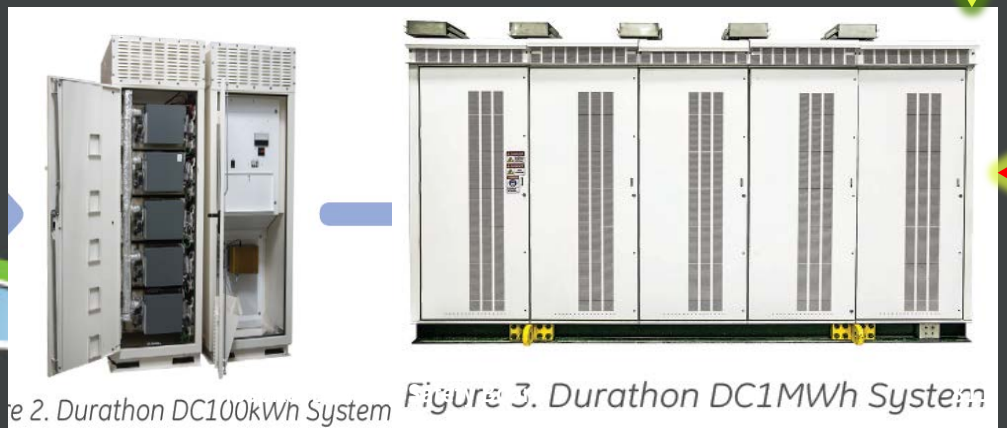

e 2. Durathon DC100kWh System

Figure 3. Durathon DC1MWh System

Princeton Power PCS

Building System Tracking

Charge Bliss Controller interrogates and reports on wide variety of system and circuit functions and building performance parameters

- Secure data portal allows real time viewing
- Automated, active export of notifications to stakeholders of device/circuit performance declines or malfunctions.

charge bliss
Intelligent Power. Delivered.

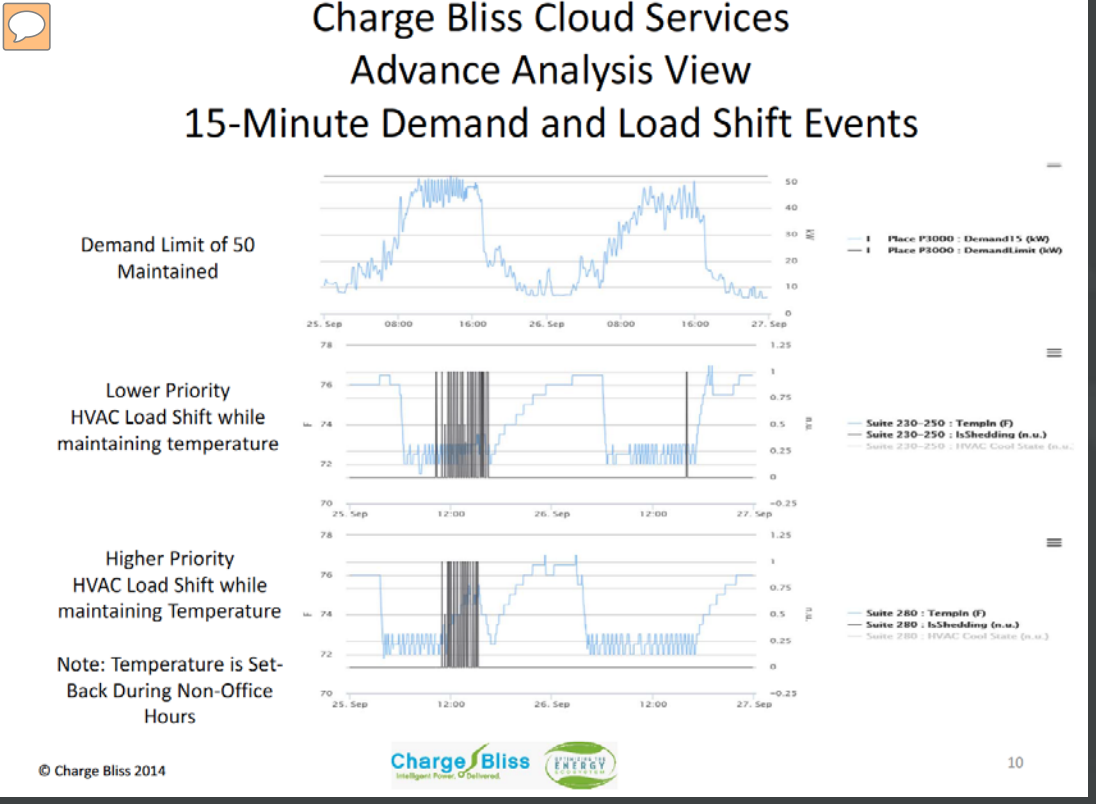

Active, Automated Building Management

- **Charge Bliss Controller** continuously coordinates discretionary loads according to parameters set by building operations personnel
  - Maintain building conditions and performance while achieving significant efficiencies
  - "Un-Stack" loads to lower demand cost charges

charge bliss
Intelligent Power. Delivered.

Possible Sites for Photovoltaics

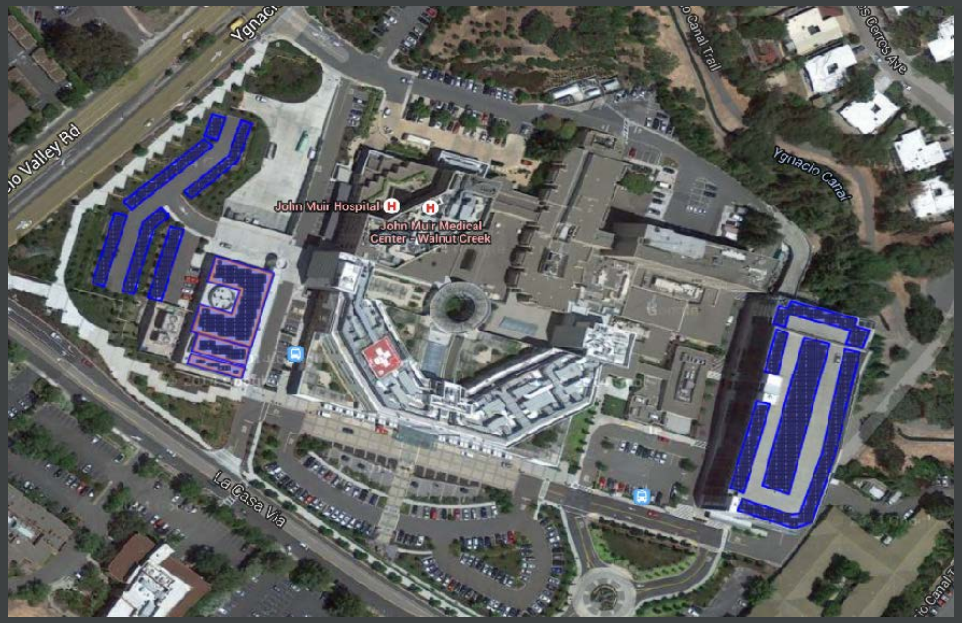

Clustered by Energy Plant with optional parking structure roof

Alternative sites (further "throw")

Iterative Analytics

- Detectors report through OSIsoft system to PI System
  - Records voltage, amperage, frequency, angle continuously of each device, circuit, or system
  - Map the entire hospital complex build model of integrative functions
  - Test simulations of modifications
    - 100% critical system integrity
    - Modulation of non-critical
    - Serial testing through NREL
    - Develop "best practice"
- Build "next generation" microgrid controller

Complex Microgrid

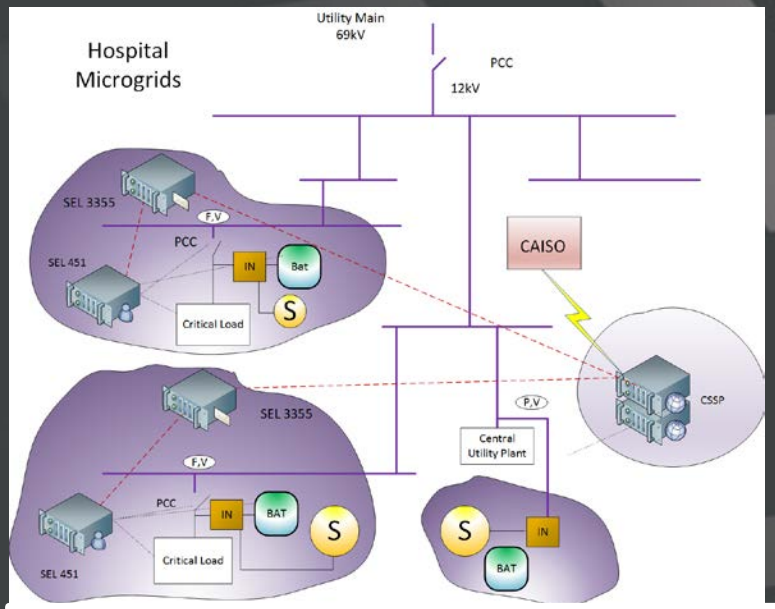

Legend:
SEL 3355: small substation hardened PC
SEL 451: programmable protection relay
PEM: CoGen
CSSP: Cyber secure Synchrophasor platform (High Availability PI system running on two SEL 3355)
SC-OSI-PI: PI data
H2-GEN Cogen
SIO: Switching Station
NCSS: Switching Station
ECCP: Chiller Plant
PCC: Point of common coupling between a microgrid and its area Electric Power System.

THANK YOU FOR YOUR CONSIDERATION

PROJECT MANAGEMENT

- Jon Harding
  - jharding@chargebliss.com
  - 949-324-4373

CORPORATE MANAGEMENT

- David Bliss, MD
  - dbliss@chargebliss.com
  - 503-490-1326

DATA and MICROGRID CONTROLLER SYSTEMS

Chuck Wells, PhD (OSIsoft, llc)
- cwells@osisoft.com
- 650-504-6278

Raymond de Callafon, PhD (UCSD)
- callafon@ucsd.edu
- 858-344-4265

charge bliss
Intelligent Power. Delivered.

OSHPD Office of Statewide Health Planning and Development

Hospital Building Safety Board
400 R Street, Suite 200
Sacramento, California 95811-6213
(916) 440-8453
Fax (916) 324-9118
www.oshpd.ca.gov/Boards/HBSB/index.html

HOSPITAL BUILDING SAFETY BOARD
Advanced Technology Committee

Monday, November 17, 2014
10:30 a.m. - 4:00 p.m.

Office of Statewide Health Planning and Development
400 R Street, Suite 452
Sacramento, CA 95811
(916) 440-8446

and

Metropolitan Water District Headquarters
700 N. Alameda Street, Suite 2-546
Los Angeles, CA 90012
(213) 897-0166

Committee Members Present
Eric Johnson, Chair
John Egan
Burt Hurlbut
Arlee Monson
Carl Scheuerman
Joe LaBrie, Consulting Member

Staff
Linda Janssen, HBSB Executive Director
Cathy Kane, HBSB
Linda Zamora, FDD

OSHPD Staff
Paul Coleman, FDD Deputy Director
Hussain Bhatia
David Castillo
Gary Dunger
Glenn Gall
Roy Lobo
Chris Tokas

1. Welcome and Introductions

Committee Chair Eric Johnson opened the meeting and invited the participants to introduce themselves.

"Access to Safe, Quality Healthcare Environments that Meet California's Diverse and Dynamic Needs"

Ms. Janssen stated that a quorum was not yet present so motions would have to wait.

(3.) Discuss the possible name change of the committee

Mr. Coleman proposed to simplify the committee name to “Technology Committee” in order to include current technology in the committee’s scope.

(The arrival of an additional committee member resulted in a quorum.)

MOTION: (M/S/C/) [Scheuerman/Monson]

The committee voted unanimously to change the name of the Advanced Technology Committee to “Technology Committee.”

(2.) Review and approve March 6, 2014 meeting report

Committee members needed a little more time to review the report.

4. Presentation of “CEC Micro Grid Technology Demonstration Project” by David Bliss, M.D. and Peter Spadia, Charge Bliss, Inc.

Project Manager Peter Spadia of Charge Bliss shared his perspective on developments in the industry and how they might affect hospitals, via a PowerPoint presentation.

- Per the Energy Information Administration website, hospitals consume almost 5% of energy of all buildings.
- Mr. Spadia listed some of the American Society of Heating, Refrigerating and Air Conditioning Engineer’s (ASHRAE’s) goals pertaining to energy.

DRAFT

- He gave a broad overview of the components of typical Building Management Systems (BMSs). They have very limited inputs, as they control temperatures using HVAC systems, and they tend to use a standard script.
- BMSs will soon have to have multiple and dynamic input, which allow the control system authorization of the building environment and energy consumption.
- Lighting is one of the biggest energy charges – for commercial buildings, up to 60% of energy use; for hospitals, a little less.
- The biggest question for standards and codes committees regarding hospital use is making onsite generation a part of normal operating power systems.
- For emergency power systems, the code does not allow for diversity – everything is very large capacity.
- Mr. Spadia discussed electrical management demand response on critical branch systems, language protocols between medical systems and building control systems, and IT system security.
- Mr. Spadia recommended presentations and workshops on energy for hospitals. He was particularly interested in automatic command response opportunities within a hospital –systems allowed to drive themselves versus systems that need manual input.

Mr. Johnson stated that his goal for the day had been to utilize Mr. Spadia to introduce the committee to the changes happening in the industry, and for the committee to align itself to work with them. The HBSB always seeks to align itself to understand these changes enough to steer in a direction that enhances the facilities.

DRAFT

Mr. Johnson also hoped to build excitement about a future workshop – to get industry vendors to step up and showcase what is happening on the commercial side.

Dr. Bliss gave a second presentation on microgrids: renewable energy systems, energy storage, and smart inverters and converters (which can change the nature of the energy being made or stored and deploy it in safe, optimal ways).

- Microgrids do not supplant existing systems, but operate in addition to them.
- In July the California Energy Commission (CEC) issued an Opportunity Notice for demonstrating secure, reliable microgrids at critical facilities, which include hospitals.
- In health care centers in the state, the current BMS algorithms limit facilities in what they can achieve. Also, CoGen is grid-tied and cannot operate when the grid goes down.
- Microgrid controllers treat the building as a connected organism.
- With new technology, we have the ability to study every load item in a building – not just its operational parameters and descriptors, but also the circumstances under which it runs.
- Dr. Bliss listed the regulatory expectations for OSHPD and PGE/CAISO. There are areas of clearcut governance for OSHPD and others that are uncertain.
- He pointed out that the Charge Bliss microgrid is grid-interactive: when the grid sags or disappears, the systems can turn back on, regulate themselves, create their own signals, and continue to produce energy.
- He showed a schematic of how the Charge Bliss Controller works in generating, storing, and deploying energy.

DRAFT

- He showed an example of how the controller creates plateaus in loads where there are peaks, simply by altering Lanware; and how devices cycle without changing the tolerance of the building.
- The bottom line is that the key to continuity of systems in any building (and specifically a hospital) is power quality and power supply. Microgrid systems have the ability to look outward from the building as well as inward, stabilizing the power quality coming in to the building, and potentially stopping the Automatic Transfer Switches from tripping.
- Dr. Bliss asked OSHPD to consider the discretionary load that OSHPD will be willing to allow a hospital to regulate on an automated basis. For example, OR lighting is 100% essential while hallway or basement lighting can vary.

Mr. Coleman addressed the topic of OSHPD's jurisdiction. There is a Code Application Notice (CAN) that states that for electrical, it is the point of connection – wherever the meter is located.

5. FDD presentation on Electronic Plan Review by Paul A. Coleman, FDD Deputy Director

Mr. Coleman first reviewed the committee's goals, particularly in terms of FDD's involvement. Two items had stood out:

"FDD staff will share with the committee what they see in Electronic Plan Review."

"The committee will assist FDD in determining how technology can be used to improve plant review processes."

DRAFT

Mr. Coleman then gave a presentation.

- Although models are now done in 3D on the computer, OSHPD still requires them to be printed out again on paper and shipped to the Office for review, where staff marks them up in pen or pencil and returns them. The designer then puts them back into 3D and makes the changes.
- In 2012, with the agreement of the HBSB, OSHPD moved forward with electronic document processing. This has reduced printing and shipping costs.
- Mr. Coleman reviewed the process of Electronic Plan Review, in which all the disciplines can concurrently review the plan electronically.
- He reviewed the Rapid Review Unit for projects up to $75,000 excluding fixed equipment costs.
- OSHPD is doing pilot programs using Electronic Plan Review, where design teams collaborate with owners to do work with more capabilities than we currently have.
- A new program under development combines Electronic Plan Review with Over-the-Counters, for “Virtual Over-the-Counters” (or “Over-the-Computers”). This allows the design team to work in different locations and to use different types of media.
- OSHPD is developing the protocols for another pilot program in which an Accella program combines EPLAN Solve with the Electronic Services Portal (eSP).
    - OSHPD is developing the standard comments and updating them to the current code.

DRAFT

- The pilot program does measurements, comparison overlays, and final comment reports.
- It allows electronic stamping of documents, facilitating approvals to be sent instantaneously.
- Each hospital can have an approved set of plans sent to an assigned printer while OSHPD can have a paper set for its archives. (By law, OSHPD must keep a paper set of all plans for its archives. Currently, OSHPD has more than 2,000 projects for which it has never received the printed sets back. These projects are getting very close to being closed for non-compliance.)
- Because the program ties in with Accella, it automatically advances workflow. As the designer completes the checking, the program does the workflow and updates everything in Accella, which then updates it automatically on the website for the client and designers to look at.
- The designer must submit in a pdf format. The program then changes it into a PNG format; going through the drawings, and refreshing and regenerating them, is very rapid.
- If the pilot program is successful, OSHPD hopes to roll it out office-wide by the end of 2015.

- OSHPD is working on electronic review in which the program actually does the review, resulting in consistency and accuracy of code review and eliminating oversights.

Questions and Public Discussion

DRAFT

Mr. Monson asked what format is needed for the 3D checks; Mr. Coleman responded that it is Revit.

An Interested Party asked whether Bluebeam Revu had been considered for Electronic Plan Review. Mr. Coleman replied that OSHPD is in fact using it on another project. It has some advantages and disadvantages over the pilot, which is more simplified than Bluebeam resulting in a shorter learning curve for staff. Mr. Coleman said that more than one platform could be offered.

The Interested Party commented that for an electrician, color is very helpful in checking. The committee agreed.

6. Discuss using a workshop for the next meeting to involve industry to demonstrate future trends

Mr. Johnson stated that a workshop could help draw interest. Presentations from the OSHPD side could show the future of Electronic Plan Review as well as a sample project in realtime. Mr. Johnson noted, however, that it is difficult to secure speakers from the industry.

Dr. Bliss offered to have a team of unaffiliated parties (such as GE) come and give a presentation.

Mr. Johnson stated that he hoped for an informal format with open dialogue in order to spark interest and have industry share what's coming in the future. This kind of

DRAFT

workshop could give a sense of future codes, policies, and even legislation, allowing the committee to get ahead of the curve.

Mr. Scheuerman commented that he had heard three categories of technology thus far in the meeting: building, clinical, and design. In a workshop, possibly the three could be separated.

Mr. Coleman commented that with some building systems now being controlled by some form of IT, their location and backup – redundant or manual – are questions he would have.

The Interested Party suggested more topics: Electronic Plan Review and Evidence-Based Medicine Reviews (EBMRs), which produce greater reliance on mobile devices for patient care.

An Interested Party spoke about her husband's experience trying to share his individual electronic health record (EHR) with the multiple doctors treating him. Mr. Scheuerman commented on the need for portability.

Dr. Bliss noted that the major EHR vendors are basically down to Epic and Cerner. The vendors now have a centralized service for the purpose of making records available to all hospitals. Another problem is Health Insurance Portability and Accountability Act (HIPAA) compliance.

DRAFT

Mr. Johnson stated that he would like to have users of the products speak at workshops along with the vendors.

He continued that a three-part workshop would consist of building systems, clinical systems, and design/Electronic Plan Review. People could attend the section that interests them.

Dr. Bliss said that he and Roger Richter could find someone to speak on the EHR industry.

Mr. Johnson envisioned a one-day workshop with three parts to be held early next year.

Mr. Coleman outlined the current code cycle schedule, should the committee come up with anything it wanted to codify: OSHPD must have its regulations to the Building Standards Commission by April 1; they have to go through a California Environmental Quality Act (CEQA) process as well. With that in mind, the interim code cycle comes up in 18 months; that would work very well for the committee rather than the current one.

Mr. Monson commented that the Electronic Plan Review portion of a workshop could also engage construction.

The committee discussed the logistics of a workshop.

- They proposed a Sacramento venue with teleconferencing for L.A. attendees; however, breakout sessions would complicate teleconferencing.

DRAFT

- A proposed date was Wednesday, February 11.
- To pull together speakers, Roger Richter volunteered to do the clinical system side from the owner's viewpoint; OSHPD will do the design/construction/ Electronic Review side; Mr. Monson will help with the design side.

(2.) Review and approve March 6, 2014 meeting report

MOTION: (M/S/C/) [Monson/Scheuerman]

The committee voted unanimously to approve the March 6, 2014 meeting report.

8. Comments from Committee Members and the Public on issues not on this agenda

There were no comments from committee members or the public on issues not on the agenda.

9. Adjournment

Mr. Johnson adjourned the meeting at 12:00 p.m.

DRAFT

This page left intentionally blank.

Board Procedures Committee

oshpd Office of Statewide Health Planning and Development

Hospital Building Safety Board
400 R Street, Suite 200
Sacramento, California 95811-6213
(916) 440-8453
Fax (916) 324-9118
http://www.oshpd.ca.gov/Boards/HBSB/index.html

11-26-14

HOSPITAL BUILDING SAFETY BOARD
Board Procedures Committee

MEETING NOTICE
December 9, 2014
1:00 pm to 4:00 pm

at the
Office of Statewide Health Planning and Development
400 R Street, Suite 452
Sacramento, CA 95811
(916) 440-8453

Board Members: Michael Foulkes, Chair; Trailer Martin, Vice Chair; John Egan; Scott Karpinen; Carl Scheuerman

HBSB Staff: Linda Janssen, Executive Director; Cathy Kane, Evett Torres

MEETING AGENDA
NOTE: Agenda order is tentative and subject to change without prior notice.

1. **Welcome and Introductions**

2. **Policies and Procedures of the Hospital Building Safety Board**
   - Review and discuss any recommended changes
   - Discussion and Public Input

3. **Review Committee Assignments and Meeting Schedules for 2015**
   - Discussion and Public Input

4. **Discussion: Definition of "Break in Service"**
    - Board members are entitled to two four-year consecutive terms of office. After a break in service, board members may be reappointed to the board. Discuss/make recommendations on what constitutes an appropriate "break" before members can be reappointed.
    - Discussion and Public Input

5. **Discussion: Director-Appointed Ex-Officio Board Members' Voting Rights**
    - Discussion and Public Input

6. **Comments from the Public/Board Members on Issues not on this Agenda:**
   The Board will receive comments from the public/members at this time on matters not on the agenda. Matters raised at this time will be taken under consideration for placement on a subsequent agenda.

7. **Adjournment**

REMINDER: Please call (916) 440-8453 on Monday, December 8th after 3:00 pm to confirm that the meeting will be taking place as scheduled. The recording will verify the meeting date and location.

<u>NOTE:</u> Meeting facilities and restrooms are accessible to the physically disabled. If any special accommodations (assistive listening device, sign language interpreter, etc.) are needed, please contact Board Staff at (916) 440-8446. Requests should be made as soon as possible but no later than 3 business days prior to the meeting.

Policies and Procedures

of the

Hospital Building Safety Board

(January 2014)

I. Introduction

The purpose of this document is to provide information regarding the policies and procedures under which the Hospital Building Safety Board (Board) performs its functions and duties.

II. Hospital Building Safety Board

The Board was statutorily created in 1973 (Senate Bill 519 - Alquist - Chapter 1130, Statutes of 1972). Subsequently, Senate Bill 961 (Chapter 303, Statutes of 1982) reauthorized the Board. In January 1994, Senate Bill 785 (Chapter 260, Statutes of 1993) significantly changed the composition and duties of the Board, and also changed the name of the Board to the Hospital Building Safety Board. The governing provisions are contained in Health and Safety (H&S) Code, Division 107, Part 7, Chapter 1, Article 5, Sections 129925 through 129960 and the State Building Standards Code, Part I, Title 24, CCR, Article 5, Sections 7-159 through 7-171.

III. Objectives of the Hospital Building Safety Board

In accordance with H&S Code, Section 129925 of the Health and Safety Code, the Board advises the Director of the Office of Statewide Health Planning and Development (OSHPD) and acts as the Appeals Board in all matters relating to the administration and enforcement of building standards relating to the design, construction, alteration, and seismic safety of health facility projects submitted to OSHPD. The Board also acts as the Appeals Board in matters relating to all fire and panic safety regulations and alternate means of protection determinations for health facility projects submitted to OSHPD.

Board Members serve the people of California, and as such their role includes their commitment for full participation in the Board's activities. The Board maintains continuing contact with professional groups and certain industry organizations through its committees. In this manner, the Board maintains an awareness of

state-of-the-art knowledge of seismic structural theory and application, architectural, mechanical, geological, seismological, electrical, fire safety theory and application, and of requirements for the disabled with regard to those health facilities constructed under the jurisdiction of OSHPD.

All actions of the Board shall be transmitted in writing, on a regular basis, to the Director of OSHPD.

In accordance with the Government Code, Chapter 13, Section 8870.95 of the Seismic Safety Commission Act, the Board shall produce an annual report addressed to the Seismic Safety Commission summarizing the year's accomplishments, studies, and appeals, as well as listing future goals and direction.

IV. Executive Director

A. In accordance with H&S Code, Section 129950, the Board shall be served by an Executive Director, who shall be a member of the OSHPD staff.

B. The Chair and Executive Director are authorized spokespersons for the Board. Only appointed Board members may speak on behalf of the Board upon authorization by the Chair or Executive Director.

V. Board Members - Membership and Responsibilities

A. The Director of OSHPD appoints members of the Board. When requested by the Director, prospective nominees will be interviewed by the Chair of the Board or Vice-Chair of the Board and the Executive Director. The Board consists of appointed members and six statutory ex-officio members.

1) The statutory ex-officio members include the Director of OSHPD, the State Fire Marshal, the State Geologist, the Executive Director of the California Building Standards Commission, the Director of the Department of Public Health, and the Deputy Director of the Facilities Development Division of OSHPD, or their officially designated representatives. The Director of OSHPD may also, with the advice of the Board Chair and Executive Director, appoint up to three additional ex-officio members.

2) The appointive members are as follows: two structural engineers, two architects, one engineering geologist, one geotechnical engineer, one mechanical engineer, one electrical engineer, one hospital facilities manager, one local building official, one general contractor, one fire/life safety representative, one hospital inspector of record, and three public members.

B. Appointive members, except for the public members, shall be qualified by close connection with hospital design and construction and highly knowledgeable in their respective fields with particular reference to seismic safety. Appointive members shall be appointed from nominees recommended by the governing bodies of California based professional organizations that represent appointive members as specified in Section 129930 including but not limited to: the Structural Engineers Association of California; the American Institute of Architects (California Council); the Earthquake Engineering Research Institute; the Association of Engineering Geologists; the American Council of Engineering Companies; the California Association of Local Building Officials; the American Society for Heating, Refrigerating, and Air-Conditioning, Inc.; the California Hospital Association; the Associated General Contractors of California; the American Construction Inspectors Association; and the California Fire Chiefs Association.

C. Although members are selected from nominees submitted by those nominating organizations listed above, no position on the Board is necessarily connected to any particular nominating organization. Board members are appointed to represent the various technical/specialty membership categories and not any specific organization.

D. Board members shall be residents of California.

E. The appointed members of the Board serve four-year terms and none shall serve as a member of the Board for more than two consecutive terms. Members with expired terms continue to serve until replaced or until one year has elapsed since the expiration of their term, whichever occurs first.

F. Delegates - Only ex-officio Board members who represent state government may appoint delegates. Such delegates shall only have committee voting privileges. The name of the delegate must be provided in writing to the Chair of the Board and the Executive Director prior to the delegate's participation on the Board.

G. Resignation - When a member resigns from the Board, the member shall send a letter of resignation to the Director of OSHPD, noting the effective date of the resignation. A copy of the letter shall be sent to the Chair of the Board and the Executive Director. In the event of a resignation, death, or removal of any member by the Director of OSHPD, the Director will appoint a new member to fill the vacancy in accordance with V (D) above and a new term will begin at the time of the appointment.

H. The Director may terminate any member’s appointment for neglect of duty or other just cause.

I. Attendance - Members shall attend meetings of the Board, serve on committees and perform other functions as assigned by the Chair. If a member is unable to attend Board or assigned Committee Meetings, the member must contact the Board's Executive Director at least 48 hours prior to the scheduled meeting. If a member is consistently absent or unable to attend committee and/or Board meetings, the Chair and/or Executive Director will meet with the member to explore appropriate remedies.

VI. Chair and Vice Chair – Roles and Responsibilities

A. Election Process:

1) The Chair and Vice Chair of the Board are appointed members elected by a majority of the appointed members.

a. The Chair and Vice Chair of the Board are nominated by a committee for each two-year term and shall not serve more than two consecutive terms. The nominating committee shall be two voting members appointed by the existing Chair at least 30 days prior to the election.

The Chair and Vice Chair shall be elected at the last Board meeting in each even numbered year. The Chair and Vice Chair shall assume office on January 1st of the following year.

b. The Chair and Vice Chair election process shall include:

(1) A call for interested candidates & issues at the next-to-last Board meeting of the election year allowing a two to four week response to the Executive Director. Only members with at least two years remaining with their term of service are eligible to be Chair or Vice Chair candidates.

(2) If no candidates come forward to express interest in Chair position, nominating committee recruits candidate(s).

(3) Nominating committee shall seek input and advice from the outgoing Chair, Executive Director, and OSHPD Director.

(4) Nominating Committee shall develop questions for Chair/Vice-Chair of the Board candidates based on issues and discussions with (3) above.

(5) Nominating committee interviews all candidates.

(6) Nominating committee recommends candidate(s) or may give no recommendation at the last Board meeting of the calendar year.

(7) Nominations are invited from the floor.

(8) Call for vote.

(9) Candidates with simple majority will be elected to Chair of the Board and Vice Chair of the Board positions.

B. The Chair has the following duties:

1) Calls all meetings.

2) Serves as presiding officer at all regular meetings.

3) Approves Board meeting agendas.

4) Designates committees, committee chairs, membership, their functions and objectives; as appropriate; subject to Board approval.

5) Appoints consulting members, as appropriate, to serve on committees.

6) Appoints newly appointed Board members to committees or fill vacancies, as needed, to establish committees.

7) Dissolves or establishes additional committees, as appropriate, subject to Board approval.

8) Advises OSHPD's Director of Board activities.

C. Upon absence of or upon delegation by the Chair, the Vice Chair of the Board shall assume the duties of the Chair. Should the Chair become unable to serve out his/her term, the Vice Chair shall serve as Chair until the end of the two year term and an election for Vice Chair shall occur during the next scheduled meeting of the Board. The Vice Chair shall serve until the end of the Chair's term.

VII. Conducting Public Meetings and Appeal Hearings

A. Unless otherwise specified, public meeting procedures will follow the Bagley-Keene Open Meeting Act.

B. To the greatest extent possible, the Board follows the latest edition of Roberts' Rules of Order.

VIII. Meetings

In accordance with Government Code, Sections 11120 through et seq., all meetings are open to the public as required by the Bagley-Keene Open Meeting Act.

A. The types of meetings that can be held are:

1) Regular Meetings

The Board convenes on the call of the Chair. The Board will meet on an as needed basis two to four times a year. It is the intent that the meetings are held in various areas throughout the state.

2) Special Meetings

The Chair may call special meetings at any time for any specific business. Special meetings are convened at various locations selected throughout the state.

3) Meetings Held Via Teleconference

Holding a meeting via teleconference shall only be used in unusual circumstances and shall not be used in lieu of a regularly scheduled Committee meeting. As a result, for teleconference meetings every effort will be made to keep the meeting limited in time. Board meetings and Appeal Hearings shall be conducted via teleconference only when necessary. All Open Meeting requirements (Bagley-Keene) apply.

4) Meetings Held Via Videoconference

Holding a meeting via video conference shall be used to improve participation and communication of regularly scheduled Committee meeting. All Open Meeting requirements (Bagley-Keene) apply.

5) Emergency Meetings

The Chair may call a meeting in emergency circumstances by providing telephone notice to media outlets at least one hour prior to the meeting. An "emergency" situation includes a disaster, which severely impairs the public health, safety, or both. In the event telephonic services are not working, notice must be given as soon as possible after the meeting.

B. Board Meetings

1) Meeting Notices and Agendas

a) Notice of all public meetings and their agendas shall be made available to all members, to any person who so requests, and posted to the OSHPD webpage, at least ten (10) days in advance of the meeting.

b) The agenda must provide a description of each item of business to be transacted or discussed so that interested members of the public will be capable of understanding the nature of each item.

c) As a general rule, items not appearing on the agenda shall not be discussed or voted on. However, when an item is raised by a member of the public, the Board may accept comments and discuss the item for a limited time, and no action is taken until it is agenized at a subsequent meeting.

2) Quorum

A quorum for a meeting of the Board will consist of one more than half the voting members. For example:

a) Five voting members; quorum is three (3) or more

b) Nine; quorum is five (5) or more

c) Ten; quorum is six (6) or more

3) Voting

a) Only appointed members and Director-appointed ex-officio members including the Chair of the Board can vote at a Board meeting. Statutory ex-officio, Chair-appointed consulting members, state staff members, and invited guests and members of the audience may not vote at a Board meeting.

b) All voting will be conducted in open meetings, except as provided in the Board's appeals hearing procedures.

4) Conflict of Interest

During Board meetings, members shall abstain from voting when they believe they have a conflict of interest. Members that believe they have a conflict of interest should review the Political Reform Act and may consult with Board Council at (916) 326-3610.

5) Meeting Reports

a) Meeting reports shall be made of all meetings and submitted to the Board for consideration and approval.

b) With the Chair's concurrence, the Executive Director will develop and have sent to each member an agenda listing the matters to be considered and, so far as practical, copies of all written reports which are to be presented to the Board will be distributed at least ten (10) days prior to the meeting.

C. Committee Meetings

The Chair of the Board shall appoint members for all standing and/or ad hoc committees. The Chair of each committee shall be a member of the Board. Of the appointees to a committee, the majority must also be members of the Board pursuant to Health and Safety Code, Sections 129930 or 129940. At the first Board meeting of the Chair's term or annually; the Chair shall present a list of committees, committee scope and membership to the Board for its approval.

1) The Committee Chairs have the following duties:

a) Carries out assignments from the Chair of the Board.

b) In consultation with the Board Chair, designates a Vice Chair for the committee.

c) Assists staff in the development of the committee meeting agenda.

d) Conducts meetings and presents a report of the committee's proceedings at the next scheduled Board meeting.

e) Reviews the committee meeting reports or assigns another member of the committee to do so.

f) Works with the Committee to establish Committee Goals.

g) Identifies the need for Consulting Members.

h) Defines the Work Product Deliverables.

i) Develops a Production Plan.

j) Defines Milestones and Action Items.

2) Meeting Notices and Agendas

a) Notice of all public meetings and their agendas shall be made available to all members, to any person who so requests and to the OSHPD webpage, at least ten (10) days in advance of the meeting.

b) The agenda must provide a description of each item of business to be transacted or discussed so that interested members of the public will be capable of understanding the nature of each item.

c) As a general rule, items not appearing on the agenda shall not be discussed or voted on. However, when an item is raised by a member of the public, the Board may accept comments and discuss the item for a limited time, and no action is taken until it is agenized at a subsequent meeting.

3) Quorum

A quorum for a committee meeting will consist of one more than half the voting members. For example:

a) Five voting members; quorum is three (3) or more

b) Nine; quorum is five (5) or more

c) Ten; quorum is six (6) or more

4) Voting

a) Only Committee members including the Chair of the committee can vote at committee meetings. Members may include appointed members, director-appointed ex-officio members, statutory ex-officio members, and consulting members appointed to a committee by the Chair of the Board. State staff, invited guests and members of the audience may not vote at committee meetings.

b) Decisions are reached by a simple majority vote. Any member shall abstain from voting on any issue where there may be a possible conflict of interest. No issues can be voted upon unless a quorum is present. No voting by proxy will be allowed.

c) All voting will be conducted in open meetings, except as provided in the Board's Appeal Hearing Procedures.

5) Conflict of Interest

During committee meetings, members shall abstain from voting when they believe they have a conflict of interest.

6) Meeting Reports

Meeting reports shall be taken of all meetings and submitted, including recommendations, to the committee and then the Board for consideration and approval.

D. Appeal Hearings

When the appellant wishes to continue an appeal after OSHPD's decision following the informal conference, a formal hearing may be requested of the Board.

1) Notice of Appeal Proceedings

Notice of appeal hearings shall be made available to all concerned parties in accordance with the State Building Standards Code, Part I, Title 24, CCR, Article 5, Chapter 7.

2) Responsibilities during Appeals

a) The Chair of the Board shall call a hearing on the appeal. At this time, the Chair can decide to have a committee hear the appeal prior to it being heard by the Board.

b) Because of the nature of the appeals process, the Chair of the Appeals Committee, for the purpose of hearing the appeal, shall not be the Chair of the Board.

c) Suggestions can be made by the Appeals Committee during the time of the appeal.

d) If the Board identifies a problem with a code or regulation, a recommendation shall be made to the Director for amendment consideration.

e) Should the appellant determine he or she has been adversely affected by the decision of the Board, the appellant may further appeal the issue for resolution by the California Building Standards Commission, in accordance with Health and Safety Code Section 18945.

3) Quorum

a) A meeting of an appeals committee, appointed by the Chair, will consist of no less than three voting members.

b) A quorum for an appeals hearing of the Board will consist of one more than half the voting members. For example:

(1) Five voting members; quorum is three (3) or more

(2) Nine; quorum is five (5) or more

(3) Ten; quorum is six (6) or more

4) Conflict of Interest

During appeal proceedings, the appellant has the right to question conflicts of interest of any voting member. The Chair shall rule on such potential conflict in appeal matters.

5) Voting

Voting at appeal hearings shall be in accordance with the State Building Standards Code, Part I, Title 24, CCR, Article 5, Chapter 7.

IX. Compensation

A. Eligibility for Reimbursement:

1) It is the policy of OSHPD to pay subsistence and to reimburse reasonable and necessary travel and incidental business expenses to individuals who perform services as members of the Board, its committees, and consultants appointed by the Chair.

2) No payment of expenses to Board members can be made unless, prior to the time the expenses are incurred, an Oath of Office is on file with OSHPD.

3) Members and ex-officio members shall be reimbursed in accordance with current State rules and regulations.

4) Transportation expenses will be reimbursed for all charges essential for transportation to and from the meeting place. Reimbursement shall be made only for the method of transportation which is in the best interest of the State. Travel should be via the shortest, usually traveled route. An explanation is required for any deviation or unusual delay.

5) Expense claims should be submitted at least once a month. Board members should submit their claims to the Board staff. Failure to furnish receipts must be explained on expense claims. The amount involved cannot be allowed in absence of a satisfactory explanation. All expense claims must contain a brief statement of the purpose or objective of each trip or business related meal for which reimbursement is claimed.

6) The Chair shall, for the good of the State of California, schedule hearings and meetings to minimize travel and per diem costs.

B. Meeting Per Diem

In accordance with H&S Code, Section 129960, Board members and ex-officio members of the Board are eligible to claim $100.00 per day in performance of official duties on behalf of the Board and authorized by the Chair of the Board.

C. Expenses and Reimbursements

In accordance with the Victim Compensation and Government Claims Board rules, Members of the Board and consultants are reimbursed from the Hospital Building Account - Architectural Public Building Fund, for their reasonable actual expenses incurred in attending meetings. The meetings are conducted to carry out the provisions of H&S Code, Division 107, Part 7, Chapter 1, Article 5, Section 129925.

This page left intentionally blank.

oshpd Office of Statewide Health Planning and Development

Hospital Building Safety Board
400 R Street, Suite 200
Sacramento, California 95811-6213
(916) 440-8453
Fax (916) 324-9118
http://www.oshpd.ca.gov/Boards/HBSB/index.html

HOSPITAL BUILDING SAFETY BOARD
Board Procedures Committee

Wednesday, December 9, 2014
1:00 p.m. - 4:00 p.m.

Office of Statewide Health Planning and Development
400 R Street, Suite 452
Sacramento, CA 95811
(916) 440-8453

Committee Members Present
Michael Foulkes, Chair
Trailer Martin, Vice-Chair
John Egan
Scott Karpinen
Carl Scheuerman
Richard Tannahill

OSHPD Staff
Chris Tokas

HBSB Staff
Kathi Zamora, FDD/HBSB
Cathy Kane
Evett Torres

1. Welcome and Introductions

Committee Chair Michael Foulkes called the meeting to order. He invited everyone present to introduce themselves.

2. Policies and Procedures of the Hospital Building Safety Board

- **Review and discuss any recommended changes**

Mr. Foulkes stated that OSHPD had not requested for the committee to discuss any specific Policies and Procedures.

- **Discussion and Public Input**

Mr. Scheuerman stated that a correction was required to section II, page 1, last item: "…*through 7-171"* should read "…*through 7-173*."

Mr. Foulkes commented that OSHPD feels that the appeals process is more cumbersome than necessary.

Meeting quorums are also an issue; Mr. Martin suggested that Board members need to be reminded that the timeframes listed on Meeting Notices are a commitment they should make.

Mr. Karpinen asked about committee chair duties. Mr. Foulkes responded that in general, the voting members on a committee are those listed on the roster. Committee chairs fill the committee slots. Mr. Egan commented that non-members attending meetings for informational purposes do not vote. Mr. Foulkes noted that in the past, if a quorum was needed to hold a vote, the Chair had the latitude to draft attendees as emergency committee members.

Mr. Egan offered the example that when he was Board Chair and Joe La Brie was Vice-Chair, they agreed that one or the other would attend the committee meetings to ensure Board leadership representation.

3. Review Committee Assignments and Meeting Schedules for 2015

DRAFT

Mr. Foulkes stated that the Board Procedures Committee typically advises the Board Chair and Vice-Chair on issues such as the next year's goals, committee assignments, etc. Mr. Karpinen stated that as the new Board Chair, he and the HBSB Executive Director would be meeting with FDD Deputy Director Paul Coleman shortly to start making committee assignments and 2015 meeting schedules.

Mr. Scheuerman commented that changes that OSHPD is interested in bringing forward to the next code cycle should come before the Administrative Processes and Code Changes Committee during the first meeting of 2015.

- **Discussion and Public Input**

Mr. Foulkes suggested reviewing each committee's upcoming activities so that the group could offer input.

- Administrative Processes and Code Changes Committee – Mr. Karpinen will not chair the committee, as he is the incoming Board Chair. Mr. Foulkes pointed out that as consulting committee members serve one-year terms, Mr. Karpinen will need to meet with each committee chair to assign new ones or extend terms of old ones; letters are sent to all incoming consulting members stating the one-year term length.
- Technology Committee – Mr. Foulkes stated that the challenge will be focusing on topics related to the seismic side, as well as making contributions that are measurable, in terms of work product, to OSHPD.

DRAFT

- Board Procedures Committee – Mr. Foulkes stated that this had been a slow year, mostly because OSHPD had cancelled meeting dates because of other meetings or because they were not quite ready.
- Education and Outreach Committee – Mr. Egan noted that new leadership is needed because of Arlee Monson's retirement. Mr. Trailer commented that there is much expressed interest in the committee's work, and OSHPD is pleased with their seminars. Mr. Egan commented that it has been the most active committee in terms of output; its outreach to the health care community has been tremendous. Mr. Foulkes commented on the increase in the volume of small projects coming in, and that OSHPD is very keen on better dialogue with the design community.
- Instrumentation Committee – Mr. Martin noted that the early warning issue may gain momentum. Mr. Egan added that if so, the committee may need to meet more than once per year. Mr. Martin commented that sensor technology is operating well throughout the state. 64 hospitals are already laid out fairly well with Advance Warning; the question is what to do with the warning when it comes. Mr. Tokas raised the question of who pays for telemetry. He stated that OSHPD's telemetry representative is Dr. Hussain Bhatia – he participates in the California Office of Emergency Services (CalOES) meetings which will no doubt be held more frequently since the recent hearing. As OSHPD learns more they will share with HBSB.
- Standard Details Committee – Mr. Karpinen stated that the committee has been working hard to complete the bulk of the work – fire partition details and ceiling details. Now they just need to be updated. Mr. Tokas said that it is fairly

DRAFT

premature to start thinking about bringing those details up to 2016 code. However, there are still more details that need to be developed – particularly Fire/Life Safety.

(Mr. Foulkes raised the topic of having an HBSB structure that maintains standing committees versus a structure that forms ad hoc committees that meet for one year until their work is done.)

- Structural/Nonstructural Committee – They did not meet last year but will meet in February. The coming year will be busier because of the code cycle. Mr. Karpinen hoped to focus on the nonstructural this year – to reach agreement and develop some standards. Mr. Tokas commented that although the codes are in place and the industry has been trained again and again, the industry doesn't do what code requires, which creates havoc on the nonstructural side when earthquakes occur.

Mr. Foulkes emphasized that when OSHPD has a specific project, the HBSB committees can be helpful. This includes forming ad hoc committees.

The group agreed that assignment of chairs is crucial to the effectiveness of committees. If many new chairs are coming in, training is warranted for them as a group.

DRAFT

Mr. Karpinen asked how often the full Board has been meeting. Mr. Foulkes replied that it had been four times per year until the recession struck and the budget became tight; then the summer meetings had been dropped. Perhaps in the future the Board should meet four times a year again if necessary.

4. Discussion: Definition of "Break in Service"

- **Board members are entitled to two four-year consecutive terms of office. After a break in service, board members may be reappointed to the board. Discuss/make recommendations on what constitutes an appropriate "break" before members can be reappointed.**

Mr. Foulkes did not think a Board member had ever been reappointed. On most public boards that he had sat on, the break usually constitutes one year. There is nothing in the HBSB Board statute or procedures that defines the length of the break. At the local level in California, when a person leaves office he or she can run again after two years. In terms of appointed positions, the break is one year.

- **Discussion and Public Input**

The group discussed the possibility of one person switching between member roles such as General Contractor and Owner.

Mr. Foulkes stated his view: the point of term limits is to have turnover on the Board rather than having the same person switching roles. However, where particular expertise is needed, people should be allowed to return; in such cases he felt that a

DRAFT

year's break should be enough time. Further, if someone's term expires and there is no replacement person, he or she can serve an additional year.

Mr. Scheuerman had asked whether a *"member"* is defined as a person or as a role; statute defines it as a person.

The group discussed the length of break for a person who is having the one-year extension of office. They felt that the break should entail not having voting rights.

> **MOTION**: (M/S/C/) [Martin/Karpinen]
>
> The Board voted unanimously to recommend a definition of *"break in service"* as *"at least one year following the cessation of service, regardless of when that comes."*

5. Discussion: Director-Appointed Ex-Officio Board Members' Voting Rights

Mr. Foulkes stated that he and Mr. Martin had talked to OSHPD about the problem that the original succession of leadership going on and off the board regularly every two, four, six, and eight years has gone off-kilter.

- **Discussion and Public Input**

Mr. Foulkes said that the statute is unclear between the terms *"appointive"* and *"appointed."* He stated that years ago, the HBSB had held a long discussion with OSHPD Legal Counsel about this issue. They concluded that the intent of the law was that if you are appointed by the Director to serve on the HBSB, whether you are in a

DRAFT

four-year term or not, you vote. If you serve because your state department has a slot (i.e., the State Geologist or the Building Standards Commission) you cannot vote.

The question of ex-officio had arisen. OSHPD decided to interpret the law such that the ex-officio members can vote in committees but not in the Board meetings; they cannot make motions, nor can they count for a quorum. Mr. Foulkes believed that this was incorrect. However, because OSHPD legal staff was not present at this meeting, the committee was not able to hear their explanation.

Mr. Scheuerman also disagreed with this interpretation. Because the committees are a functional arm of the Board, they originate most of the business that the board conducts. If you have a vote on a committee, then you are voting to bring motions before the full Board. Those motions must then be seconded by a person not on the committee. If that is the case, how would your vote in the committee be valid if you had no vote on the full Board?

Mr. Foulkes surmised that OSHPD legal staff would say that consulting members also can vote at the committee level but not at the full Board level (they cannot even sit on the full Board).

He added that he and Mr. Martin had made several hundred motions over the years; would they be invalid?

DRAFT

Mr. Foulkes distinguished between *"appointive"* and *"appointed"* for Mr. Egan. In the statute, there are two types of appointments: appointive members with four-year appointments and ex officio members are appointed by the Director, while appointed members (who do not vote) are appointed by the departments.

He continued that for the record, since the statute went into effect on January 1, 1994, the Senate has always had a member on the Board and that member has always voted. Department designees have never voted. Mr. Foulkes felt that this makes the designees second-class citizens of sorts. It will be difficult to entice people to go into those roles in the future – they will wish to be members with a vote.

Mr. Egan asked if ex officio members can hold positions of Chair and Vice-Chair of the Board – according to HBSB Procedures, they can. Mr. Foulkes said that OSHPD's new interpretation was that they cannot. This committee needed to have OSHPD legal staff present to hear their rationale; hopefully that will occur at the next meeting.

Mr. Martin recalled an appeal in which he and Mr. Foulkes had both voted in favor of the appellant, but the vote had been very close. The outcome could have been different without their votes.

Mr. Foulkes felt that until this issue creates a problem, no one has much appetite to challenge it.

6. Comments from the Public/Board Members on Issues not on this Agenda

DRAFT

Mr. Karpinen stated that at full board meetings, committee chairs now give PowerPoint presentations to report on their committee's activities, where before, the chairs would read from the meeting notes. Mr. Foulkes responded that PowerPoints force the chairs to be more organized in what they present. When there was more controversy within the HBSB, the full Board would vote on each committee motion separately, then vote on the report as a whole. If committees start having close votes, we may want to consider taking up that practice again.

Mr. Karpinen recalled a contentious vote on the Codes Committee about whether to implement the Green Building Standards. When that was reported on at the full Board meeting, there had been no discussion. Mr. Martin suggested that in a case like that, the Board chair should recommend addressing the meeting motions separately.

Mr. Martin added that PowerPoint presentations can be beneficial when the material is dry. Mr. Foulkes commented that committee chairs could be reminded that a little of the back story is useful to include when they give their meeting reports.

Mr. Egan asked if Mr. Foulkes wanted to have Legal present to give their opinions on the appointed members issue. Mr. Karpinen asked if another meeting should be scheduled for early next year. Mr. Foulkes replied that he would discuss the matter with the Executive Director.

7. Adjournment

Mr. Foulkes adjourned the meeting at 2:50 p.m.

DRAFT

Education & Outreach Committee

oshpd Office of Statewide Health Planning and Development

Hospital Building Safety Board
400 R Street, Suite 200
Sacramento, California 95811-6213
(916) 440-8453
Fax (916) 324-9118
http://www.oshpd.ca.gov/Boards/HBSB/index.html

01-02-14

HOSPITAL BUILDING SAFETY BOARD
Education and Outreach Committee

MEETING NOTICE
Thursday, January 16, 2014
1:00 p.m. — 4:00 p.m.

at the
Office of Statewide Health Planning and Development
400 R Street, Suite 452
Sacramento, CA 95811
(916) 440-8446

And, at the
Metropolitan Water District Headquarters
700 N. Alameda Street, Suite 2-546
Los Angeles, CA 90012
(213) 897-0166

Board Members: Arlee Monson, Chair; Eric Johnson, Vice-Chair; Bob Chason; John Donelan; Lou Gilpin; Bert Hurlbut; Joe La Brie (Consulting Member)

OSHPD Staff: Gary Dunger; John Gillengerten; Lorin Neyer

HBSB Staff: Linda Janssen, Executive Director; Evett Torres, Cathy Kane

MEETING AGENDA

NOTE: Agenda order is tentative and subject to change without prior notice.

1. **Welcome and Introductions**

2. **Updates on Seminar *California Hospital Projects from A to Z—Tips from the Experts: A Workshop***
   - Discuss Outcome of Seminars held in September and October 2013
   - Discuss Possibility of Scheduling Another Seminar (Wait List)
   - Discussion and Public Input

3. **Other Seminars and/or Educational Opportunities concepts—some potential concepts for discussion are listed below:**
   - "Materially Alter" seminar
   - Electronic Services Portal seminar/educational opportunity
   - Expansion on the Hospital Owner's portion of the manual
   - Standard Details seminar
   - Seismic Certification seminar
   - Updates to the 2013 California Building Code
   - NPC Compliance workshop

   - Discussion and Public Input

4. **Comments from the Public/Board Members on Issues not on this Agenda:**
   The Board will receive comments from the public/members at this time on matters not on the agenda. Matters raised at this time will be taken under consideration for placement on a subsequent agenda.

5. **Adjournment**

REMINDER: Please call (916) 440-8453 on Wednesday, January 15th after 3:00 p.m. to confirm that the meeting will be taking place as scheduled. The recording will verify the meeting date and location.

<u>NOTE:</u> Meeting facilities and restrooms are accessible to the physically disabled. If any special accommodations (assistive listening device, sign language interpreter, etc.) are needed, please contact Board Staff at (916) 440-8446. Requests should be made as soon as possible but no later than 3 business days prior to the meeting.

Committee Goals for 2014

Education & Outreach Committee

- Conduct one more "Tips from the Experts" seminar?
- Update the "Tips from the Experts" manual
- Prepare seminars on Standard Details
- Education opportunities for "Materially Alter"
- Podcasts/Webinars—discuss possible topics
- 2013 CBSC seminars
- NPC compliance—looming deadlines; training or outreach efforts required?

This page left intentionally blank.

oshpd Office of Statewide Health Planning and Development

Hospital Building Safety Board
400 R Street, Suite 200
Sacramento, California 95811-6213
(916) 440-8453
Fax (916) 324-9118
http://www.oshpd.ca.gov/Boards/HBSB/index.html

HOSPITAL BUILDING SAFETY BOARD
Education and Outreach Committee

Thursday, January 16, 2014
1:00 p.m. - 4:00 p.m.

Office of Statewide Health Planning and Development
400 R Street, Suite 452
Sacramento, CA 95811
(916) 440-8446

Committee Members Present
Arlee Monson, Chair
Eric Johnson, Vice-Chair
Bob Chason
John Donelan
John Egan
Lou Gilpin
Bert Hurlbut
Joe La Brie, Consulting Member

OSHPD Staff
Robert P. David, OSHPD Director
Paul Coleman, FDD Director
Gary Dunger
Lorin Neyer
Chris Tokas
Elizabeth Wied, Legal Counsel

HBSB Staff
Linda Janssen, Executive Director
Cathy Kane
Evett Torres

1. Welcome and Introductions

Committee Chair Arlee Monson called the meeting to order. All those present introduced themselves.

Mr. Monson stated that this would be a goal-setting meeting for the year ahead.

2. Updates on Seminar for *California Hospital Projects from A to Z – Tips from the Experts: A Workshop*

- **Discuss Outcome of Seminars held in September and October 2013**

Mr. Monson stated that these had been a very successful set of seminars.

- **Discuss Possibility of Scheduling Another Seminar (Wait List)**

Mr. Monson felt that if another seminar were to be held, it would be difficult to follow the same exact format.

Ms. Janssen stated that 86 names were on the Wait List, more than half of which were located in Southern California. Seventeen names were from Stanford.

Mr. Coleman agreed that feedback indicated that the seminars had been very well received, including the format and style. Picking a venue for a repeat seminar would be difficult given the distribution of those on the Wait List. Holding the seminar in Sacramento would cut down on OSHPD's cost.

Mr. Coleman added that 160 attendees were the limit that the seminar format could effectively handle. Mr. Monson observed that two complete days had been extensive; Mr. Coleman suggested that the content could be condensed in places. They decided to try to arrange a one-day seminar to be held on a Friday (even though many IORs had attended the Saturday sessions).

Mr. Coleman suggested looking at the manual to see where the material could be condensed.

People on the waiting list will be contacted about the seminar. Advertising would be the same as in the past: the website, flyers, having CHA contact their members. Ms. Janssen stated that she would begin looking at venues and dates; when she had some possibilities she would contact the presenters. Mr. Coleman said that OSHPD would bring the committee a proposed condensed version. He noted that panel discussions may need to be cut.

Mr. La Brie agreed to serve as moderator once more.

3. Other Seminars and/or Educational Opportunities concepts – some potential concepts for discussion are listed below:

- "Materially Alter" seminar
- Electronic Services Portal seminar/educational opportunity
- Expansion on the Hospital Owner's portion of the manual
- Standard Details seminar
- Seismic Certification seminar
- Updates to the 2013 California Building Code
- NPC Compliance workshop

Mr. Monson said that the “Materially Alter” topic had to do with the Code Application Notice (CAN). The Structural/Non-Structural committee would be discussing expanding on the CAN.

Mr. Coleman commented that he envisioned this topic as a component of a seminar, possibly combined with Standard Details or Seismic Certification. Such a seminar would be appropriate for designers rather than inspectors or hospital owners.

Although such a seminar would be an OSHPD seminar, Mr. Coleman sought participation by outside design professionals to enhance its effectiveness. He suggested the Bay Area and Los Angeles as locations and a May timeframe.

Mr. Monson mentioned the possibility of webinars; Mr. Coleman noted that Glenn Gall’s group has a presentation on Accessibility (the whole chapter on Accessibility has been restructured). The topic of Functional Program could possibly be combined with Materially Alter and Standard Details.

Ms. Janssen noted that the HBSB’s webinar service is restricted to 150 participants, but staff had talked before about partnering with the California Hospital Association (CHA) which has no participant limit.

Mr. Coleman summarized the meeting’s progress thus far:

- A one-day *Tips* seminar
- A workshop for design professionals to be held in two locations

Mr. Monson remarked that taking the suggested topic bullet points that pertain to design professionals would cover half of the topics. Regarding NPC Compliance workshops – are there deadlines on NPC coming up that need some sort of public outreach? Mr. Coleman responded that the Seismic Compliance Unit sends out letters; there are deadlines for hospitals that have NPC3 extensions.

Mr. La Brie asked about opportunities to talk about seismic compliance in upcoming seminars. Mr. Coleman said that the remaining hospitals who had requested extensions and do not have HAZUS scores are the most problematic. All that OSHPD can do is continue to plead with them to respond, but a seminar is probably not the right venue.

Mr. Coleman alluded to the irony that people who attend the seminars are those most interested in improving the quality of their product and service. Those who could benefit the most do not attend; they are the ones who submit the poorest quality plans and so forth.

Mr. Monson referred to the topic of “Expansion on a Hospital Owner’s portion of the manual.” Because the manual was done to the 2010 code rather than the 2013 code, Mr. Coleman felt that the group would need to look at a code update on the manual. Mr. Monson stated that the Hospital Owner topic would be kept on the meeting agenda for next time, to see what kind of scope would be involved in an update.

Mr. Coleman stated that OSHPD's internal technical experts for each discipline would go through the manual to check for necessary code updates or deletions.

Ms. Janssen said that because of infrastructure restrictions, podcasts and YouTubes would still be difficult to do. However, an hour-long session could be digitally recorded and placed on the website for downloading. Mr. Monson confirmed that PowerPoint presentations can be posted.

Mr. Egan asked whether there was any role for social media in the outreach process. Mr. Coleman replied that OSHPD has a Facebook page where workshop notices are posted; OSHPD is also getting ready to start tweeting.

The group ascertained that a full-blown Electronic Service Portal seminar has not been done, although Mr. Dunger has given presentations at facilities and webinars. Mr. Coleman said that seminars may be developed when more components are included in Client Access.

Mr. Dunger stated that he has been wanting to put together training videos that are web-based, so that clients could go to the website, click on a link, and watch a video such as "How to Submit a Post-Approval Document." Creating the videos is actually the easy part; the problem is that OSHPD does not have a media server.

Mr. Coleman noted that if some training videos were produced, OSHPD's Director's Office and Information Security Office would then allow OSHPD to give the videos to the

California Hospital Association (CHA) and others to put on their websites. He asked the group to find a way to make the videos accessible.

Ms. Janssen gave the next scheduled meeting date as April 3.

The group discussed the March meeting date for the next “Tips from the Experts” seminar. Considering the necessity of obtaining commitments from speakers, obtaining presentations, and securing a venue, April may be more realistic.

4. Comments from the Public/Board Members on Issues not on this Agenda

Mr. Chason commented that he had attended a meeting the previous week in which IOR issues had been discussed. Everyone had agreed that more IOR training would be beneficial.

Mr. Egan made a request: because all the committee members are also members of other committees, they should actively keep in mind additional education opportunities when attending meetings.

5. Adjournment

Mr. Monson adjourned the meeting at 2:10 p.m.

This page left intentionally blank.

oshpd Office of Statewide Health Planning and Development

Hospital Building Safety Board
400 R Street, Suite 200
Sacramento, California 95811-6213
(916) 440-8453
Fax (916) 324-9118
http://www.oshpd.ca.gov/Boards/HBSB/index.html

4/21/14

HOSPITAL BUILDING SAFETY BOARD
Education and Outreach Committee

MEETING NOTICE
Thursday, May 1, 2014
10:00 a.m. — 4:00 p.m.

at the
Office of Statewide Health Planning and Development
400 R Street, Suite 452
Sacramento, CA 95811
(916) 440-8453

And, at the
Metropolitan Water District Headquarters
700 N. Alameda Street, Suite 2-546
Los Angeles, CA 90012
(213) 897-0166

Board Members: Arlee Monson, Chair; Eric Johnson, Vice-Chair; Bob Chason; John Donelan; Lou Gilpin; Burt Hurlbut

OSHPD Staff: Gary Dunger; Lorin Neyer

HBSB Staff: Linda Janssen, Executive Director; Cathy Kane; Evett Torres

MEETING AGENDA
NOTE: Agenda order is tentative and subject to change without prior notice. All times are approximate and subject to change. A 30-minute to one-hour lunch will be taken sometime during the day.

1. **Welcome and Introductions**

2. Review the January 16, 2014 Meeting Report
    - Discussion and public input

3. *"Tips from the Experts"* Seminar— Sacramento, May 30th, 2014
    - Update on attendee signups
    - Venue and Presentation Logistics
    - Review of PowerPoint presentations
    - Discussion and public input

4. Other Seminars
    - Design Professionals Workshop
        - Functional Programs – 2013 CAC
        - OSHPD Preapproved Details—OPDs
        - OSHPD Special Seismic Certification Preapproval—OSPs
        - OSHPD Preapproval of Manufacturer's Certification—OPMs
    - Other Potential Seminar Topics for 2014
    - Discussion and public input

5. **Comments from the Public/Board Members on Issues not on this Agenda:** The Board will receive comments from the public/members at this time on matters not on the agenda. Matters raised at this time will be taken under consideration for placement on a subsequent agenda.

6. **Adjournment**

REMINDER: Please call (916) 440-8453 on Wednesday, April 30th, after 3:00 p.m. to confirm that the meeting will be taking place as scheduled. The recording will verify the meeting date and location.

NOTE: Meeting facilities and restrooms are accessible to the physically disabled. If any special accommodations (assistive listening device, sign language interpreter, etc.) are needed, please contact Board Staff at (916) 440-8453. Requests should be made as soon as possible but no later than 10 business days prior to the meeting.

Parking:
Sacramento—There are garages at 500 R Street and CalPERS Plaza. CalPERS Plaza has two entrances: one on Fifth Street, north of R Street; and another on Q Street, between Fourth and Fifth Streets. All three charge $1.25/hour or $12/day. There are also 10-hour parking meters around the perimeter of the building.
Los Angeles—There is valet service at the Metropolitan Water District Building that is available 8 am to 5 pm and they charge between $6 and $12. There is also Five Star Parking lot on Cesar Chavez Avenue and Alameda Street that charge $14/day or $2.00 every 20 minutes.

Questions? Call Board Staff at the above phone number.

The Hospital Building Safety Board and the
Office of Statewide Health Planning & Development's
Facilities Development Division

presents

California Hospital Projects from A to Z – Tips from the Experts

An Informative Workshop

Friday, May 30, 2014

(7:30 am breakfast & registration ~ morning session begins at 8:30; afternoon session ends at 4:30 pm)

Session #1

OSHPD's Paul Coleman covers the basics of the OSHPD organization—why and how we do what we do! Includes a Question & Answer session with the Deputy Director.

Session #2

What hospital owners need to know! Hear from OSHPD managers and experienced owners as they cover the owner's perspective and get pointers for having a successful hospital construction project. A panel discussion is planned at the end of the session with an opportunity to ask questions.

Session #3

Submittals, Design & OSHPD Review: This session will cover best practices for the review process of your project. With a Question & Answer session and a panel discussion to follow.

Session #4

Working with OSHPD in the Field: This session will cover the key points on effectively working with OSHPD during construction from permit to closure.

Continental Breakfast and Lunch are included with your registration!
Plus...receive a copy of the **Tips from the Experts** *manual!*

Cost: $125 per attendee

Who should attend:
Architects, Engineers, Hospital Owners, Contractors, IORs and others interested in hospital construction.

Where and When?

Sacramento

May 30, 2014

Hilton Sacramento Arden West
2200 Harvard Street
Sacramento, CA 95815-3306

Hotel Reservations: (800) 370-1233

Tips from the Experts Seminar Registration
May 30, 2014 ~ Sacramento, CA

ATTENDEE NAME: _____

FACILITY/FIRM NAME(s): _____

PHONE #: _____

E-MAIL ADDRESS: _____

Please select the box below that most closely describes you:

- ❑ Hospital Owner
- ❑ Architect
- ❑ Structural Engineer
- ❑ MEP Engineer
- ❑ Construction
- ❑ Inspector of Record
- ❑ Other _____

REGISTRATION FEE: $125 per attendee Total Amount Enclosed: $_____

METHOD OF PAYMENT: (Check or money order must be made payable to OSHPD)

❑ CHECK ❑ MONEY ORDER ❑ AMERICAN EXPRESS ❑ MASTERCARD ❑ VISA

CARD HOLDER'S NAME: _____

CREDIT CARD NUMBER: _____ EXPIRATION DATE: _____

BILLING ADDRESS: _____

CITY: _____ STATE: _____ ZIP CODE: _____

SIGNATURE: _____

Please submit a completed registration form and your payment to:
OSHPD, Facilities Development Division
Attention Evett Torres
400 R Street, Suite 200, Sacramento, CA 95811

The registration form may be submitted by email to FDD.Seminar@oshpd.ca.gov or by mail to the address listed above. Seating is limited to the first 140 paid attendees. Registration fees will not be refunded for "No Shows." Registration will be accepted at the door as space permits.

For more information call Evett Torres at (916) 440-8453 or e-mail FDD.Seminar@oshpd.ca.gov

OSHPD/FDD Tips from the Experts Seminar
One-Day Only – Schedule of Events

Friday

7:30	Registration/Breakfast
8:30	General Session/Housekeeping
8:45	Session #1: Introduction to OSHPD/FDD
10:15	Break
10:30	Session #2: Guidelines for Hospitals
12:00	Lunch in Atrium
1:15	Session #3: Working with OSHPD/FDD in the Field
2:45	Break
3:00	Session #4: Submittals, Design and OSHPD/FDD Review
4:30	General Session/Close

This page left intentionally blank.

The seminar called
"All You Need to Know"

Dates, Venues and Notes of Interest for the HBSB Education and Outreach Committee

May 1, 2014

Dates and Locations

- **Thursday, September 11**
  - Double Tree by Hilton – Berkeley
    - $117 per person
- **Thursday, October 2 Options**
  - Red Lion - Anaheim
    - $58 per person
  - Crown Plaza - Anaheim
    - $102 per person

Dates and Locations

- **Thursday, October 9 Options**
  - Red Lion – Anaheim
    - $58 per person
  - Marriott – San Ramon
    - $98 per person
  - Marriott – Anaheim
    - $115 per person
  - Hilton Garden Inn – San Francisco
    - $93 per person

Dates and Locations

- **Friday, October 10**
  - Marriott – San Ramon
    - $98 per person

Notes: prices do not include OSHPD expenses (staff reimbursement, materials, etc.) and venues have different perks/conditions with parking and food costs.

oshpd Office of Statewide Health Planning and Development

Hospital Building Safety Board
400 R Street, Suite 200
Sacramento, California 95811-6213
(916) 440-8453
Fax (916) 324-9118
http://www.oshpd.ca.gov/Boards/HBSB/index.html

HOSPITAL BUILDING SAFETY BOARD
Education and Outreach Committee

Thursday, May 1, 2014
10:00 a.m. - 4:00 p.m.

Office of Statewide Health Planning and Development
400 R Street, Suite 452
Sacramento, CA 95811
(916) 440-8453

And

Metropolitan Water District Headquarters
700 N. Alameda Street, Suite 2-546
Los Angeles, CA 90012
(213) 897-0166

Committee Members Present
Arlee Monson, Chair
Eric Johnson, Vice-Chair
Bob Chason
John Donelan
Lou Gilpin
Bert Hurlbut
Joe La Brie, Consulting Member

OSHPD Staff
Robert David, Director
Gary Dunger
Lorin Neyer
Chris Tokas

HBSB Staff
Linda Janssen, Executive Director
Cathy Kane
Evett Torres

1. Welcome and Introductions

Committee Chair Arlee Monson called the meeting to order and announced that a quorum was present. The attendees introduced themselves.

2. Review the January 16, 2014 Meeting Report

Mr. Monson provided a summary of the January meeting.

3. "Tips from the Experts" Seminar – Sacramento, May 30, 2014

- **Update on attendee signups**

Ms. Janssen reported that so far, 70 people had signed up to attend. The limit is 140. Registration had been a bit more sluggish than for the first two seminars. Roger Richter has sent the flyer out again to California Hospital Association (CHA) members. The seminar is also being advertised on OSHPD's Facebook page.

- **Venue and presentation logistics**

The venue is the Arden West Hilton. Registration and continental breakfast will be at 7:30. The seminar begins at 8:30; each session lasts 90 minutes. The ending time is 4:30.

- **Review of PowerPoint presentations**

Mr. Monson directed the committee to the PowerPoint screen shots in their packets. He observed that the IOR session is #3 rather than #4. The sessions are as follows:

Session 1: OSHPD Presentation – Mr. Coleman and Mr. Tokas

Session 2: Tips for the Owners – Mr. Scheuerman

Session 3: Inspector of Record Guidelines – Mr. Dunger and Mr. Oakley

Session 4: Submittals, Design, and OSHPD Review

Architectural – Mr. Monson

OSHPD Roles and Responsibilities – Mr. Gall

Submittals – Mr. Monson

Engineering Judgments – Mr. Dunger

Structural – Mr. La Brie

MEP Roles and Responsibilities – Mr. Johnson

Mr. La Brie ascertained with Mr. Monson that there will be no panels. If time permits, there can be Q & A at the end of each presentation. Attendees can also ask questions at the conclusion of the seminar. Mr. Monson recommended having written questions as well.

There will be no lunch speaker.

Bob Omens recommended instructing the attendees that questions should be generic rather than specific to projects.

Review of Session 1

Mr. Tokas stated that Session 1 is shorter than before but the message is the same. Mr. Coleman intends to give a complete view of what OSHPD does in general.

Ms. Janssen noted that during the last seminar, she and Mr. La Brie had been texting each other during presentations to keep track of the time and ensure the speakers knew how much time they had left in their sessions. Mr. La Brie mentioned that the presenters are experienced and know to glance at him for signals as they are speaking.

Mr. Tokas walked the committee through the Session 1 slides. Basically they will explain OSHPD's function. He and Mr. Coleman will discuss the guide:

- The structure of OSHPD
- FDD's mission, jurisdiction, structure, regions, responsibilities, and regulatory activities
- A case study on evacuating a building
- Sustaining the high performance standards
- Plan Review and Approval, and the flow of work
- Tools for delivering – OPMs, OSPs, and OPDs
- CANs
- The new TIO Inspection/Observation Job Card for Hospitals
- Field issues
- Changes to drawings and amendments to construction documents

Tips are provided throughout.

Mr. Monson expressed concern that field people had been told that non-materially alter, even if it is on the list, still has to be submitted. The message about the process must be clear. Mr. Tokas clarified that if it is an RFI that creates a material change, it becomes an ACD; otherwise, we move on. Ms. Neyer commented that the field staff confirm whether the change materially alters work or not.

Mr. Tokas noted that industry is wanting confirmation for every single piece of paper.

Mr. Monson stressed the importance of the process; Ms. Neyer stressed the value of the log for keeping records.

Mr. Tokas continued his review of the content of the slides.

- Examples of non-materially alter, the process, ACD, etc.
- The seismic compliance progress
- The Hospital Building Safety Board (Ms. Janssen noticed a necessary correction: ex-officio members do not have term limits)
- Emergency response after an earthquake
- By statute, OSHPD researches earthquake engineering, new and advanced technologies, computer analyses, etc.
- Feedback from the industry
- The CPR dispute resolution process
- Old and new FDD services, including electronic services for the future

Ms. Neyer suggested a change to the language on slide 43 regarding “as-built” drawings.

Mr. Monson noted the value of keeping record drawings up-to-date, both non-material and material; this would be a good tip.

Mr. Tokas observed that industry-wide, drawings are now being perfected before we reach construction. We are seeing a piecemeal progression. Mr. Monson agreed that in our integrated approach and 3-D, we are seeing twice the volume of what we used to

get. The issue is both good and bad. It is a weighty discussion between the trades in the field and the designers of what is appropriate.

Session 2 Review

Mr. Monson read through Mr. Scheuerman's slides. Mr. La Brie suggested condensing the paragraphs into shorter bullet points, but the slides are in final form. Mr. Tokas felt that Mr. Scheuerman was not going to read the slides word for word. The group observed that the fourth slide went into a more streamlined style.

The committee proofread the slides as they went and noted necessary corrections.

- The phases explained in the session are Project Selection and Identification, Project Planning, Design, Permit, Construction, and Close-Out.
- For the Project Planning Phase, Mr. Hurlbut pointed out the importance of mentioning logistics during construction – parking can be a disaster.
- For the Design Phase first slide, the group sought to clarify the term "rules." They also felt the bullet point referencing "as-built conditions" needed clarification; the same went for the last bullet point as well.
- For the last bullet in the last Design Phase slide, Ms. Neyer requested further explanation.
- For Dispute Resolution in the Permit Phase, "Appeal to Division Chief" should read "Appeal to Deputy Division Chief."
- For the Construction Phase, "Hire a competent IOR" could use additional clarification.

- For the Close-Out Phase, Mr. Tokas suggested the statement, “The Close-Out Phase starts the day that construction starts.”

Mr. Scheuerman emphasized that Sessions 1 and 2 have the potential for a lot of redundancy. While Mr. Coleman is speaking for OSHPD, Mr. Scheuerman is speaking to the owners; they are focusing their presentations as such.

Mr. Monson reviewed the suggested changes and additions with Mr. Scheuerman. Regarding the beginning section, Mr. Scheuerman explained that the presentation is a segmentable package that can be used at different times for different audiences. For the upcoming seminar, he will touch on the key points of the slides.

Session 3 Review

Mr. Dunger’s presentation had not been modified since the first two seminars, so the committee opted not to go through it.

Mr. Scheuerman requested assistance for his presentation from anyone who was interested in adding visuals.

Session 4 Review

Mr. Monson walked the committee through the presentation. He stated that he had changed a few slides to condense the introduction.

Mr. Gall had also cut down his portion of the presentation. Mr. Scheuerman suggested adding “Air Quality Districts” to the sixth slide. The group noticed that the duplicate bullet item on the last slide should be deleted.

Mr. La Brie said that for his presentation, he did not change anything – he only deleted some material.

Mr. Johnson said that he would run through the same slides with an emphasis on Mechanical and Electrical. He will spend some time on as-builts, scope of work, temporary systems, and phasing. For final tips, he will emphasize Mr. Scheuerman’s point about getting your head above the ceiling and bringing a flashlight; Mr. Monson’s point about allowing time to spend in the field; and Mr. La Brie’s point on the importance of face-to-face communication.

Mr. Scheuerman suggested adding the code reference (3418A) to CAN 1-6-1.4.5.1.4, Removal of Acute Care Services.

Mr. Monson said that after each session there will be Q & A, with a follow-up Q & A at the very end where all the presenters will be available.

4. Other Seminars

- **Design Professionals Workshop**
    - Functional Programs – 2013 CAC
    - OSHPD Preapproved Details – LPDs

- OSHPD Special Seismic Certification Preapproval – OSPs
- OSHPD Preapproval of Manufacturer's Certification – OPMs

Ms. Janssen stated that Mr. Coleman had suggested topics at the last Board meeting for the "All You Need to Know" seminar:

- eSP/Gateway to OSHPD Services
- Incorporation of Standard Details
- To Materially Alter Or Not?
- What is a Functional Program?
- OPMs and the 2013 Building Code Highlights

Ms. Kane presented potential dates, venues, and notes of interest for the "All You Need to Know" seminar. She directed the committee to send questions or date preferences to the hbsbsupportstaff@oshpd.ca.gov email address.

Ms. Janssen stated at this point, the dates and locations need to be decided upon – then staff can adjust the registration fees to ensure that all costs are captured.

The committee agreed that Thursdays are preferable to Fridays. They discussed the dates and locations, and decided to try for October 2 at the Berkeley Doubletree and October 9 at the Anaheim Marriott.

- **Other Potential Seminar Topics for 2014**

Mr. Dunger mentioned that he is being inundated with questions about the effect on OSHPD of the New Life Safety Code being adopted by the Centers for Medicare and Medicaid Services (CMS). They have come out with 15 or 20 waivers that are in conflict with state code.

The Administrative Processes and Code Changes Committee is the appropriate group to handle this topic, but Ms. Janssen pointed out that they are not scheduled to meet until December 9.

Mr. La Brie suggested that the Advanced Technologies Committee would be a good one to provide a presentation with meaningful content – maybe a year or two from now. Mr. Monson felt that the year 2015 is a possibility.

5. Comments from the Public/Board Members on Issues not on this Agenda

There was no further discussion from the public or board members.

6. Adjournment

Mr. Monson adjourned the meeting at 1:08 p.m.

oshpd Office of Statewide Health Planning and Development

Hospital Building Safety Board
400 R Street, Suite 200
Sacramento, California 95811-6213
(916) 440-8453
Fax (916) 324-9118
http://www.oshpd.ca.gov/Boards/HBSB/index.html

6/5/14

HOSPITAL BUILDING SAFETY BOARD
Education and Outreach Committee

MEETING NOTICE
Wednesday, June 18th, 2014
10:00 a.m. — 4:00 p.m.

at the
Office of Statewide Health Planning and Development
400 R Street, Suite 452
Sacramento, CA 95811
(916) 440-8453

And, at the
Metropolitan Water District Headquarters
700 N. Alameda Street, Suite 2-546
Los Angeles, CA 90012
(213) 897-0166

Board Members: Arlee Monson, Chair; Eric Johnson, Vice-Chair; John Donelan; Lou Gilpin; Burt Hurlbut

OSHPD Staff: Gary Dunger; Lorin Neyer

HBSB Staff: Linda Janssen, Executive Director; Cathy Kane; Evett Torres

MEETING AGENDA

NOTE: Agenda order is tentative and subject to change without prior notice. All times are approximate and subject to change. A 30-minute to one-hour lunch will be taken sometime during the day.

1. **Welcome and Introductions**

2. **Review and approve the draft May 1st, 2014 draft Meeting Report**
   - Discussion and public input

3. **Report on the "California Hospital Projects from A to Z – Tips from the Experts" seminar held on May 30th in Sacramento**
   - Discussion and public input

4. **"All You Need to Know Assortment" seminar Update**
   - Venue and Logistics
   - Presentation Topics
   - Discussion and Public Input

5. **Other Education Opportunities for 2014**
   - Discussion and Public Input

6. **Comments from the Public/Board Members on Issues not on this Agenda:** The Board will receive comments from the public/members at this time on matters not on the agenda. Matters raised at this time will be taken under consideration for placement on a subsequent agenda.

7. **Adjournment**

REMINDER: Please call (916) 440-8453 on Tuesday, June 17th, 2014, after 3:00 p.m. to confirm that the meeting will be taking place as scheduled. The recording will verify the meeting date and location.

NOTE: Meeting facilities and restrooms are accessible to the physically disabled. If any special accommodations (assistive listening device, sign language interpreter, etc.) are needed, please contact Board Staff at (916) 440-8453. Requests should be made as soon as possible but no later than 10 business days prior to the meeting.

Parking:
Sacramento—There are garages at 500 R Street and CalPERS Plaza. CalPERS Plaza has two entrances: one on Fifth Street, north of R Street; and another on Q Street, between Fourth and Fifth Streets. All three charge $1.25/hour or $12/day. There are also 10-hour parking meters around the perimeter of the building.
Los Angeles—There is valet service at the Metropolitan Water District Building that is available 8 am to 5 pm and they charge between $6 and $12. There is also Five Star Parking lot on Cesar Chavez Avenue and Alameda Street that charge $14/day or $2.00 every 20 minutes.

Questions? Call Board Staff at the above phone number.

"Tips from the Experts" Seminar
Friday, May 30, 2014
Survey Results

Paid Registrants	141
Hospital Owner	14%
Architects	17%
Structural Engineer	1%
MEP Engineer	2%
Construction	33%
IOR	4%
OTHER/Not specified	29%

Surveys received	11

1. Which most closely describes you?

Hospital Owner	1
Architects	2
Structural Engineer	1
MEP Engineer	2
Construction	2
IOR	0
OTHER/Not specified	3

2. Which Session(s) did you find informative/useful?

#1- Intro to OSHPD	82%
#2- Tips for Owners	64%
#3- Working w/ OSHPD Field	64%
#4- Submittals/Design/Review	73%

3. Which Session(s) did you find less informative/useful?

#1- Intro to OSHPD	18%
#2- Tips for Owners	36%
#3- Working w/ OSHPD Field	18%
#4- Submittals/Design/Review	18%

5. Overall, how would you rate this seminar?

	Unsatisfied	Neither
Location	18%	9%
Registration Process		
Materials organized		
Info current/pertinent		
Speakers knowledgeable		
Overall organization		

Comment :

- Venue room was very cran and tight. Would have been more comfortable to spread out a little
- More food options for vegetarians would be ; ood.
- This was a fantastic seminar/workshop, and would urge future seminars using project specific data/analys .
- The overall presentati did present the way for best practice when working with OSHPD, which was helpful. However, it could be more beneficial if case studies where presented for possibly small projects and large projects to problems vs sc utions.
- For the last session,would have been better to have had a mechanical consultant speak on mechanical topics rather than an electrical consultant (although he did do ra ıer well!).
- Can you include OSHPD Structural Engineers to present in the next pres(ntation?
- It would have ten very useful if there was more information from OSHPD about different aspects of the design review process. I think it would have been great to hear from some of the OSHPD reviewers in addition to upper management as they are the ones the public deals wth most. Overall, it was help ul.
- Include the followir ;:
  1. Review processes for OSHPD 1, 2, 3, & 4 projects (iPD review or local City revi(w)
  2. AMOC process(;.
- Please make it so OSHPD seminars have Continuing Education credit fo the AIA.
- Wellorganized, the information was well presented and useful. Providing the information electronically is valuable and can as well be offered in a zip dr e/ CD.
- All sessions/ presenters w(extremel informativ(
- The event was great and we learned from the ever .
- Seminar was well organized and presented. The Power Points presented at the sessions provided the information clearly and easy to follow. Keep up the gc d work.
- Thanks for the workshop on Friday. I thoroughly enjoyed it and informative and beneficial. It was great to meet some of the OSHPD st(f also.
- It was extremely helpful and informc ive.
- This was an excellent seminar. I recommend this to anyone overseeing planning/facilities. I plan on taking my Board PlanrCommittee members to the next sem ıar.
- I was pleasantly surprised with the accessibility and willingness to help from the speakers (Bob David, Paul Coleman, and Gordon Oa ey).

"Tips from the Experts" Seminar
Friday, May 30, 2014
Survey Results

Paid Registrants	141	
Architects	17%	(19)
Structural Engineer	1%	(24)
MEP Engineer	2%	(2)
Construction	33%	)
IOR	4%	(5)
		(41)
Surveys received	71	

1. Which most closely describes you?

Hospital Owner	1
Architects	2
Structural Engineer	1
MEP Engineer	2
Construction	2
IOR	0
OTHER/Not specified	2

Structural Engineer	1	
MEP Engineer	2	
Construction	2	
IOR	0	
[illegible]ER/Not specified	3	

2. Which Session(s) did you find informative/useful?

#1- Intro to OSHPD	82%	(9)
#2- Tips for Owners	64%	(7)
#3- Working w/ OSHPD Field	64%	(7)
#4- Submittals/Design/Review	73%	(8)

3. Which Session(s) did you find less informative/useful?

#1- Intro to OSHPD	18%	(2)
#2- Tips for Owners	36%	(4)
#3- Working w/ OSHPD Field	18%	(2)
#4- Submittals/Design/Review	18%	(2)

5. Overall, how would you rate this seminar?

	ed			

#1- Intro to OSHPD	18%	(2)
#2- Tips for Owners	36%	(4)
#3- Working w/ OSHPD Field	18%	(2)
#4- Submittals/Design/Review	18%	(2)

5. Overall, how would you rate this seminar?

	Unsatisfied	Neither	Satisfied	Very Satisfied
Location	18%	9%	36%	36%
REGISTRATION PROCESS				**100%**
Materials organized			18%	82%
Info current/pertinent			36%	64%
Knowledgeable			27%	73%
Overall			27%	73%
Met expectations		9%	36%	55%

#3- Working w/ OSHPD Field	18%	(2)
#4- Submittals/Design/Review		(2)

5. Over... rate this seminar?

	Unsatisfied	Neither	Satisfied	Very Satisfied
Location	18%	9%	36%	36%
Registration Process				100%
Materials organized			18%	82%
Info current/pertinent			36%	64%
Speakers knowledgeable			27%	73%
Overall organization			27%	73%
Met expectations		9%	36%	55%

Comments:

- Venue room was very crampy and tight. Would have been more comfortable to spread out a little.
- More food options for vegetarians would be good.

- This was a fantastic seminar/workshop, and would urge future seminars using project specific data/analysis.
- The overall presentation did present the way for best practice when working with OSHPD, which was helpful. However, it could be more beneficial if case studies where presented for possibly small projects and large projects to problems vs solutions.
- For the last session, it would have been better to have had a mechanical consultant speak on mechanical topics rather than an electrical consultant (although he did do rather well!).
- Can you include OSHPD Structural Engineers to present in the next presentation?
- It would have been very useful if there was more information from OSHPD about different aspects of the design review process. I think it would have been great to hear from some of the OSHPD reviewers in addition to upper management as they are the ones the public deals with most. Overall, it was helpful.
- Include the following:
  1. Review processes for OSHPD 1, 2, 3, & 4 projects (ie OSHPD review or local City review)
  2. AMOC processes.

- Please make it so OSHPD seminars have Continuing Education credit for the AIA.
- Well organized, the information was well presented and useful. Providing the information electronically is valuable and can as well be offered in a zip drive/ CD.

- All sessions/ presenters were extremely informative!
- The event was great and we learned a lot from the event.
- Seminar was well organized and presented. The Power Points presented at the sessions provided the information clearly and easy to follow. Keep up the good work.
- Thanks for the workshop on Friday. I thoroughly enjoyed it and found it informative and beneficial. It was great to meet some of the OSHPD staff also.
- It was extremely helpful and informative.
- This was an excellent seminar. I recommend this to anyone overseeing planning/facilities. I plan on taking my Board Planning Committee members to the next seminar.
- I was pleasantly surprised with the accessibility and willingness to help from the speakers (Bob David, Paul Coleman, and Gordon Oakley).

This page left intentionally blank.

All You Need to Know Assortment - ***Venues***

A Seminar Presented by
FDD & the HBSB

October 2014

October 2014

Sun	Mon	Tue	Wed	Thu	Fri	Sat
			1	2	3	4
5	6	7	8	9 Southern California Anaheim Marriott	10 Northern California San Ramon Marriott	11
12	13	14	15	16	17	18
19	20	21	22	23	24	25
26	27	28	29	30 Northern California Concord Hilton	31	Notes:

Southern California

- Anaheim Marriott Suites
- Thursday, October 9, 2014
- Cost per person (140) $102
- Nearest airport – John Wayne
- State rate $120.00 – honored
- Free parking

Northern California

San Ramon: Friday, October 10

- San Ramon Marriott
- Cost per person (140) $98
- Nearest airport – Oakland
- State rate $90 – honored
- Parking $18 per day

Concord: Thursday, October 30

- The Concord Hilton
- Cost per person (140) $99
- Nearest airport – Oakland
- State rate $90 – honored
- Parking is $2 per hour, but they will make a deal for staff/presenters

At a Glance

- Average Cost $100
  - Administration/materials costs not included
  - Sleeping rooms to be paid by the individual

- DATES:
  - Thursday, October 9 - Southern California
  - Friday, October 10 - Northern California
  - Thursday, October 30 - Northern California

This page left intentionally blank.

oshpd Office of Statewide Health Planning and Development

Hospital Building Safety Board
400 R Street, Suite 200
Sacramento, California 95811-6213
(916) 440-8453
Fax (916) 324-9118
http://www.oshpd.ca.gov/Boards/HBSB/index.html

HOSPITAL BUILDING SAFETY BOARD
Education and Outreach Committee

Wednesday, June 18, 2014
10:00 a.m. - 4:00 p.m.

Office of Statewide Health Planning and Development
400 R Street, Suite 452
Sacramento, CA 95811
(916) 440-8453

And

Metropolitan Water District Headquarters
700 N. Alameda Street, Suite 2-546
Los Angeles, CA 90012
(213) 897-0166

Committee Members Present
Arlee Monson, Chair
Eric Johnson, Vice-Chair
John Donelan
Bert Hurlbut

Joe La Brie, Consulting Member

OSHPD Staff
Paul Coleman, FDD Director
Gary Dunger
Chris Tokas

HBSB Staff
Linda Janssen, Executive Director
Cathy Kane
Evett Torres

1. Welcome and Introductions

Committee Chair Arlee Monson called the meeting to order and announced that a quorum was present. The attendees introduced themselves.

2. Review and approve the draft May 1, 2014 Meeting Report

Mr. Monson stated that the May meeting had mostly consisted of a trial run of the OSHPD presentation "Tips from the Experts."

MOTION: (M/S/C/) [Johnson/Hurlbut]

The committee voted unanimously to approve the May 1, 2014 Meeting Minutes as recorded.

3. Report on the "California Hospital Projects from A to Z – Tips from the Experts" seminar held on May 30 in Sacramento

Ms. Torres gave the report.

- Similar to last year, the majority of the attendees were in construction, with very few engineers attending.
- A survey that attendees completed showed Mr. Coleman's session to be the most useful, with the Submittals and Design Review session the second most useful.
- All aspects of the seminar except for the hotel venue received marks of Satisfied or Very Satisfied.
- There were 11 responses to the survey.

Discussion and Public Input

Ms. Janssen noted that the comment regarding Continuing Education credit had been consistent among all three "Tips from the Experts" seminars including past years.

An Interested Party from Kaiser Permanente gave the perspective that attendance of Kaiser's project managers was lacking; they had no incentive to attend. However, this will change next year when Kaiser makes Continuing Education mandatory for all 115 project managers. Mr. Coleman asked if there is a contact who approves programs to be qualified; the Interested Party responded that it is up to the individual director of each region.

Mr. Monson commented that many people had not heard about the seminar. Mr. Coleman noted that the seminar had been publicized on Facebook, the website, the California Hospital Association (CHA) meeting, emails to the contact list, etc. It had indeed been sold out. Ms. Janssen noted that registration was extremely sluggish until the two weeks prior to the seminar.

The group agreed that Mr. La Brie has done an outstanding job as facilitator at all of the seminars. He keeps the program on track, on time, and moving along.

The group suggested supplying handouts for future seminars in the OSHPD offices.

Mr. Coleman referred to one useful comment: a suggestion to use more real life project examples on goes right, what can go wrong, etc. Ms. Janssen pointed out that positive comments were received on the design, layout, and printing of the manual itself. Mr. Monson suggested incorporating useful examples in future editions of the manual.

4. "All You Need to Know Assortment" seminar update

- **Venue and Logistics**

Ms. Kane gave the update on the upcoming seminar plans.

Three venues are holding these dates without a contract:

- Anaheim Marriott on October 9
- (Possible) Anaheim Marriott on October 10
- (Possible) San Ramon Marriott on October 10
- Concord Hilton on October 30

All three venues offer the state rate.

Mr. Coleman commented that it would be very difficult to have back-to-back seminars in the south and then the north.

The group agreed that the October 9 and October 30 dates would be best.

- **Presentation Topics**

Ms. Janssen stated that per the May meeting report, the presentation topics were as follows.

- Functional Programs – 2013 CAC
- OSHPD Preapproved Details – LPDs
- OSHPD Special Seismic Certification Preapproval – OSPs
- OSHPD Preapproval of Manufacturer's Certification – OPMs

Topics that Mr. Coleman had suggested at the last Board meeting for the “All You Need to Know” seminar:

- eSP/Gateway to OSHPD Services
- Incorporation of Standard Details
- To Materially Alter Or Not?
- What is a Functional Program?
- OPMs and the 2013 Building Code Highlights

Mr. Coleman commented that this seminar is geared toward designers and builders rather than inspectors, who do not tend to come to seminars held on Thursdays.

Likely presenters will be:

- Functional Program: Glenn Gall
- eSP: Gary Dunger
- Mechanical Equipment: Eric Johnson
- Standard Details: Bert Hurlbut

Discussion and Public Input

Mr. Coleman noted that the variety of speakers shows collaboration and involvement. He added that someone from industry could present Materially Alter.

Mr. Dunger suggested a source at Cummins Cal Pacific. Mr. Monson pointed out the need to direct presentations according to the OSHPD program and how industry relates to it. He requested the committee to email him any suggestions for speakers.

Mr. Coleman suggested that Mr. Monson could tag-team with Mr. Gall for the Functional Program presentation. Mr. Coleman commented that it would be good to walk through PIN 57 and OSHPD's expectations. The goal is to have Licensing and Certification step up and provide comments to the applicant before Plan Approval.

Mr. Johnson and Mr. Monson discussed the value of collaboration and relationships among the engineers, architects, and field staff, more than what the code says. Mr. Coleman commented on the value of IORs attending the seminar.

Mr. Hurlbut mentioned that changes in plan check could be covered.

Mr. Coleman outlined FDD's primary objectives for 2014:

1. Expand electronic plan review capabilities.
2. Increase the use of Standard Details.
3. Expand over-the-counter capabilities.

Mr. Monson mentioned the use of smartboards as a better tool for field staff to review field issues. Mr. Coleman added that OSHPD is working with a large provider group on "virtual plan review" in which much of plan review is done electronically.

At that point the group decided to consider what could be covered in the four 1½ hour sessions. Mr. Monson said that he could look at Functional Program and Materially Alter to see how to compose a presentation. He sought input from the committee members.

Mr. Donelan mentioned Pre-approved and Standard Details; Mr. Coleman thought they could be combined with OSPs and OPMs.

Ms. Janssen said that the third session was looking like eSP and OSHPD Developing Processes combined together.

The group discussed having the fourth session as Building Code highlights along with new CANs and PINs.

Mr. La Brie suggested having case studies in which a panel discusses material from the prior sessions. Mr. Coleman felt that a moderator would be needed who could keep the session constructive and prevent it from turning into a series of complaints.

Mr. Coleman suggested that the eSP and Developing Processes session could be held last in order to end on a high note; eSP has many benefits for the stakeholders. Mr. Dunger mentioned that by October the next version of eSP will be rolled out, which will affect Citizen Access.

An Interested Party commented on the value of Q & A sessions. Mr. Coleman felt that each session should have time scheduled for Q & A.

Ms. Janssen stated that she would draft the schedule, topics, and possible speakers, and distribute them to the committee for their responses.

The group agreed that the committee should meet again in the first part of August.

Mr. Coleman mentioned the need to work with the American Institute of Architects (AIA) regarding Continuing Education credits, as well as the need to ensure that Kaiser constituents are notified.

The group discussed possible titles for the seminar.

Mr. Coleman commented that it is better to offer more venues rather than larger venues.

An Interested Party mentioned that the Accessibility piece of projects is often a challenge. Mr. Coleman said that OSHPD is working on revising CAN 2.11b to reflect the 2013 code; it will be part of the seminar when it is done. He added that almost every project is going to have some element of Accessibility, as the codes have been reformatted to comply with the Americans with Disabilities Act (ADA).

Mr. Monson commented on the dilemma of trying to find the compliance balance. When reviewers are ADA-focused, they may request many changes to the design to make it more accessible.

Mr. Coleman stated that the seminar will include discussion of highlights of CANs and PINs regarding issues of, for example, site accessibility.

Mr. La Brie suggested a seminar title of “Hot Topics.” The group liked the idea.

They set the next meeting date for August 13 tentatively.

5. Other Education Opportunities for 2014

Mr. Coleman referred to the statutory deadline of December 31, 2014 for the Submittal/Ready for Review portion of seismic compliance. Hospitals will need to be educated through the California Hospital Association (CHA), contacts with them, webinars, etc. A webinar about requirements for submittals by the end of 2014, and minimal submittals based on size and scope of each project, would be beneficial.

Mr. Dunger stated that he has been using the OSHPD system successfully for webinars on eSP. The limit on participants using “Go to Meeting” is 25. For more participants he can upsize or use AT&T, which has a limit of 150.

Roger Richter stated that he has been working with Mr. Dunger on the CMS proposed conditions of participation related to the requirement for all hospitals to adopt the National Fire Protection Association (NFPA)99 2012 edition in its entirety. Mr. Dunger said that whether or not it will become retroactive could have a huge impact on hospitals in California.

Mr. Monson suggested the Technology topic in some form for next year. The industry is using virtual capabilities more and more. Mr. Johnson mentioned that having AutoDesk come and talk about their future tools would be beneficial. An Interested Party noted that to get away from sales pitches, the hospitals themselves could speak on uses of technology.

Mr. Coleman said that Del Kirkish is the new Electrical Technical Lead; he could be called upon regarding new issues and developments.

Mr. Coleman stated that much of the systems in hospital buildings are driven by new technology. Some of the systems should be regulated by state law; another issue for them is seismic certification.

Mr. Coleman mentioned that another educational topic is IOR training tools being developed in the Inspection Services Unit. They are posting YouTube video clips on tasks such as properly inspecting an expansion anchor.

He added that OSHPD is trying to separate the IOR seminars from the recertification. Mr. Monson suggested getting industry associations to sponsor some of the videos. Mr. Coleman agreed, and said that he envisions a sort of IOR academy which would be for OSHPD's own staff as well. He suggested an IOR workshop where they can come in and discuss their issues and concerns. Management could then get a better understanding of areas to work on to make the program successful.

An Interested Party referred to the misunderstanding about what the IOR's job is. Besides what is required by the state, many other things are involved. Mr. Monson agreed that there is a wide range of opinions among design staff and field staff on why the IOR is there. Mr. Coleman noted that a workshop scenario could be used in which IORs are invited as well as field staff

6. Comments from the Public/Board Members on Issues not on this Agenda

An Interested Party inquired about the “job card.” Mr. Coleman explained that the Testing-Inspection-Observation (TIO) is the job card.

7. Adjournment

Mr. Monson adjourned the meeting at 11:48 a.m.

This page left intentionally blank.

OSHPD Office of Statewide Health Planning and Development

Hospital Building Safety Board
400 R Street, Suite 200
Sacramento, California 95811-6213
(916) 440-8453
Fax (916) 324-9118
www.oshpd.ca.gov/Boards/HBSB/index.html

8/1/2014

HOSPITAL BUILDING SAFETY BOARD
Education and Outreach Committee

MEETING NOTICE
Wednesday, August 13th, 2014
10:00 a.m. — 4:00 p.m.

at the
Office of Statewide Health Planning and Development
400 R Street, Suite 452
Sacramento, CA 95811
(916) 440-8453

And, at the
Metropolitan Water District Headquarters
700 N. Alameda Street, Suite 2-546
Los Angeles, CA 90012
(213) 897-0166

Board Members: Arlee Monson, Chair; Eric Johnson, Vice-Chair; John Donelan; Lou Gilpin; Bert Hurlbut

OSHPD Staff: Gary Dunger; Lorin Neyer

HBSB Staff: Linda Janssen, Executive Director; Cathy Kane; Evett Torres

MEETING AGENDA

NOTE: Agenda order is tentative and subject to change without prior notice. All times are approximate and subject to change. A 30-minute to one-hour lunch will be taken sometime during the day.

1. **Welcome and Introductions**

2. **Review the draft June 18, 2014 Meeting Report**
   - Discussion and public input

3. **"Hot Topics" Seminar Updates**
   - Review of Dates, Venues and Logistics
   - Confirm Presenter Attendees and Draft Agenda
   - Review Topic Outlines and/or Slides
     Session #1 – Functional Program and Materially Alter
     Session #2 – Standard Details and Pre-approved Certifications
     Session #3 – Gateway to OSHPD Services
     Session #4 – OSHPD Developing Processes
   - Discussion and Public Input

4. **Other Education Opportunities for 2014**
   - Webinar for Up-coming December 2014 Deadline
   - CMS proposed adoption of NFPA 99
   - Technology Committee Forum-Workshop
   - IOR-Field Staff Workshop and Training Tools
   - Discussion and Public Input

5. **Comments from the Public/Board Members on Issues not on this Agenda:**
   The Board will receive comments from the public/members at this time on matters not on the agenda. Matters raised at this time will be taken under consideration for placement on a subsequent agenda.

6. **Adjournment**

REMINDER: Please call (916) 440-8453 on Tuesday, August 12th, 2014, after 3:00 p.m. to confirm that the meeting will be taking place as scheduled. The recording will verify the meeting date and location.

NOTE: Meeting facilities and restrooms are accessible to the physically disabled. If any special accommodations (assistive listening device, sign language interpreter, etc.) are needed, please contact Board Staff at (916) 440-8453. Requests should be made as soon as possible but no later than 10 business days prior to the meeting.

Parking:
Sacramento—There are garages at 500 R Street and CalPERS Plaza. CalPERS Plaza has two entrances: one on Fifth Street, north of R Street; and another on Q Street, between Fourth and Fifth Streets. All three charge $1.25/hour or $12/day. There are also 10-hour parking stations and meters around the perimeter of the building.
Los Angeles—There is valet service at the Metropolitan Water District Building that is available 8 am to 5 pm and they charge between $6 and $12. There is also Five Star Parking lot on Cesar Chavez Avenue and Alameda Street that charge $14/day or $2.00 every 20 minutes.

Questions? Call Board Staff at the above phone number.

October 2014

FDD & HBSB present

"Hot Topics! The Seminar"

One Day Seminars

Two Locations:

Anaheim Marriott Suites * Thursday, October 9	
	• State Rate $120 - Reservations must be made by September 17, 2014 • John Wayne Airport is the nearest airport to the Marriott/seminar location

Concord Hilton * Thursday, October 30	
	• State Rate $90 – Reservation information not available at this time • Oakland Airport is the nearest airport to the Hilton/seminar location

*Contracts not approved by OSHPD as of 08/13/14

The OSHPD/HBSB "Hot Topics" Seminar
Draft Schedule of Events
October 9, 2014 – Anaheim Marriott Suites
October 30, 2014 – Concord Hilton

7:30	Registration/Breakfast
8:30	General Session/Housekeeping
8:45	Session #1: Functional Program & Materially Alter Possible presenters: Glenn Gall & Arlee Monson (Functional Program) Scott Karpinen, Eric Johnson, and someone from industry (Materially Alter) (15-minute Q/A Session after the presentation)
10:15	Break
10:30	Session #2: Standard Details and Preapproved certifications Possible presenters: Bert Hurlbut (Standard Details), Chris Tokas and Roy Lobo (Preapproved certifications) (15-minute Q/A Session after the presentation)
12:00	Lunch
1:15	Session #3: eSP – Gateway to OSHPD Services Possible presenters: Gary Dunger (15-minute Q/A Session after the presentation)
2:45	Break
3:00	Session #4: OSHPD Developing Processes (virtual plan review, electronic reviews, increased OTCs, etc.); CANs & PINs; Building Code Highlights; Checklists Possible presenters: Paul Coleman and other OSHPD Experts (15-minute Q/A Session after the presentation)
4:30	General Session/Close

FUNCTIONAL PROGRAM

- Why did OSHPD decide to put this in the Code?
- What use is the Functional Program to the reviewers?
- Being a required submittal, is there a level of acceptable content?
- Why is the Functional Program required for a Preliminary Submittal?
- “Code Minimum” design.

Hospital Building Safety Board

FUNCTIONAL PROGRAM

- The Owners Program and what matters to start a project.
- Operational and Space Programming with the Users.
- New Projects vs. Renovations.
- Aligning Chapter 1224 requirements (Code Minimum) with the Functional Program

FUNCTIONAL PROGRAM

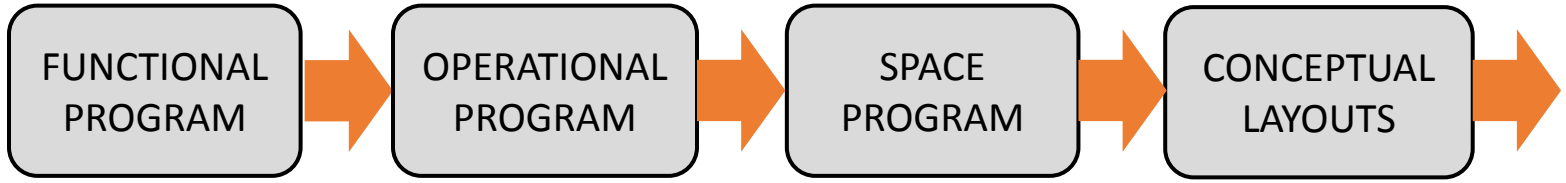

EDUCATIONAL OPPORTUNITIES

Thursday, October 9
Anaheim Marriott Suites
Garden Grove

Thursday, October 30
Hilton
Concord

Topics/Sessions
Session #1 – Functional Program and Materially Alter
Session #2 – Standard Details and Pre-approved Certifications
Session #3 – Gateway to OSHPD Services
Session #4 – OSHPD Developing Processes

OSHPD
Office of Statewide Health Planning and Development

Facilities Development Division

OSHPD Office of Statewide Health Planning and Development

Hospital Building Safety Board
400 R Street, Suite 200
Sacramento, California 95811-6213
(916) 440-8453
Fax (916) 324-9118
www.oshpd.ca.gov/Boards/HBSB/index.html

HOSPITAL BUILDING SAFETY BOARD
Education and Outreach Committee

Wednesday, August 13, 2014
10:00 a.m. - 4:00 p.m.

Office of Statewide Health Planning and Development
400 R Street, Suite 452
Sacramento, CA 95811
(916) 440-8453

and

Metropolitan Water District Headquarters
700 N. Alameda Street, Suite 2-546
Los Angeles, CA 90012
(213) 897-0166

Committee Members Present
Arlee Monson, Chair
John Donelan
Burt Hurlbut
John Egan
Scott Karpinen
Joe La Brie, Consulting Member

OSHPD Staff
Paul Coleman, FDD Deputy Director
Gary Dunger
Chris Tokas

HBSB Staff
Linda Janssen, Executive Director
Cathy Kane
Evett Torres

1. Welcome and Introductions

Committee Chair Arlee Monson welcomed everyone and invited them to introduce themselves.

2. Review and approve the draft June 18, 2014 Meeting Report

Mr. Monson gave a summary of the June meeting.

The committee established that line 3 on page 6 should read “PIN 57” rather than “1057”.

MOTION: (M/S/C/) [Hurlbut/Donelan]

The committee voted unanimously to approve the June 18, 2014 Meeting Report with the correction noted above.

3. “Hot Topics” Seminar Updates

- **Review of Dates, Venues and Logistics**

Ms. Janssen directed the committee to the flyer listing the two venues. She stated that the hotel contracts are ready for processing and signature.

Ms. Janssen announced that because the HBSB had actually made money on the previous seminar (none of the presenters had submitted expenses for reimbursement), the committee needed to revisit the registration fee for the upcoming seminar. She suggested decreasing the amount to $100 per person; the committee agreed.

- **Confirm Presenter Attendees and Draft Agenda**

The committee reviewed the Draft Schedule of Events. Mr. Monson noted that Glenn Gall cannot present at the October 30 seminar. FDD staff said that Eric Jacobsen could

fill in. Mr. Coleman said he would contact Gordon Oakley to contribute to the Materially Alter session.

Mr. Coleman mentioned the need for a master PowerPoint slide format. Ms. Janssen said she would come up with different options and email them for people to vote on.

An Interested Party asked about making handouts of the sessions available. The committee answered that all of the PowerPoint presentations will be posted online after the seminars.

- **Review Topic Outlines and/or Slides**

Session #1 – Functional Program and Materially Alter

Mr. Coleman mentioned accessibility; Mr. Monson stated that Mr. Gall would talk about the code side, and Mr. Monson would talk about the reality of designing to Chapter 1224, the Americans with Disabilities Act (ADA), and so on. It is actually a 30-minute topic by itself.

Session #2 – Standard Details and Pre-approved Certifications

Session #2 will be led by Mr. Hurlbut, Mr. Tokas, and Mr. Lobo. The session will include OSHPD Special Seismic Preapproval Lists (OSPs), OSHPD Preapproval of Manufacturer's Certifications (OPMs), OSHPD Preapproved Laboratories (OPLs), OSHPD Preapproved Details (OPDs), and Policy Intent Notice (PIN) 58.

Session #3 – Gateway to OSHPD Services

Session #3 will be led by Mr. Dunger. Mr. Coleman suggested also having users of Client Access talk about their experiences and the benefits derived. Mr. Monson suggested for Mr. Dunger to do demonstrations; there will be some changes to the program to show. Mr. Dunger thought that the building permit and post-approval documents would lend themselves to demonstrations.

Session #4 – OSHPD Developing Processes

Mr. Monson stated that Session #4 will include Virtual Plan Review, Electronic Review, over-the-counter, CANs, PINs, building codes, and so on. Mr. Coleman wanted to have demonstrations of virtual over-the-counter using Smart Board technology. He also wanted to show how Google Earth enables the user to find projects and status very quickly. In addition, the session will include the autocode project and electronic document processing being used in the Sutter and Stanford pilot projects.

- **Discussion and Public Input**

The group discussed problems in the past in getting sound with the videos.

Mr. Monson showed slides that provide an outline of Functional Program. The session will include:

- Audience questions with answers from the OSHPD side
- PIN 57, which addresses the content of a Functional Program
- The need for a preliminary stage
- Code minimum design
- Space programs

(Mr. Coleman stated that there will be no one at the conference to speak on behalf of Public Health and what they will and will not do.)

- The essentials for starting a project
- Facilities Guidelines Institute (FGI) outlines – how the process develops into a Functional Program
- Operational space programming
- New projects and renovations
- Compliance examples of 12.4 requirements and variations of room designs that are trying to meet code minimum
- Functional program is the end product of an operational program, a space program, and a conceptual design all rolled up. (It can also be developed after the fact of design because of the need to validate.)

The group discussed problems with licensing. Mr. Coleman stressed the importance of having a process in place that ensures that the designer has thought about the operational and functional program needed for that patient care service.

Mr. Monson and Mr. Gall will try to present the material in the outline in the span of 30 minutes.

The group discussed the importance of building hospital rooms according to the procedures that will be done in them, to ensure that they will be successfully licensed.

Mr. Monson mentioned the Materially Alter list, which gives an idea of the scoping issues between field staff, engineers, and designers. One of the main topics of the session should be discerning the line that crosses into Materially Alter. When engineers and designers sit down and negotiate with field staff, many more things are non-material – regardless of what the list says. The list is a guideline mostly for engineers and designers to get an understanding of where their latitude is when they are doing change orders.

Mr. Coleman noted that the statute actually gives field staff authority to allow work to be done before it's approved, if it can be approved as a field review.

Mr. Tokas commented that Session #2 appeared to be the easiest session, and showed the slides ready thus far to the group. Everything has a common thread: What is really a non-structural component, and how is it correlated with sub-components, supports, attachments, and everything else? That is where most of the misunderstandings arise.

Mr. Tokas will then spend time on the specific illustration of attachments, braces, and so on. He will include some definitions that have been included in ASCE 7, and correlate the information to components versus non-structural components.

He will spend time on the commonly confused subject of what constitutes a support. He will move from functionality to OPMs – benefits, what they cover from system to system, limitations, etc.

Mr. Tokas will explain key requirements of ASCE 7 and obtaining a manufacturer's certification. He will stress the value of OPMs regarding the load path issue, giving examples of supports for distributed systems and how the whole load path is addressed. He added that the new Factory Mutual Test 1950 program for distribution systems has simplified this area.

Mr. Tokas will discuss the OSP: what it requires, the OSHPD approval, responsibility of the manufacturer, roles of the design professional and the building official, and the most commonly disputed item – labeling. He will also cover mounting and provide a demonstration of an actual test.

Mr. Hurlbut will discuss OPDs. Mr. Tokas will provide some information on OPLs.

Mr. Monson noted that an issue had come up on a job regarding strap hangers: OSHPD had said that SMACNA hangers that are imbeds are not acceptable. Mr. Tokas said that he would take a look at the problem.

For Session #4, Mr. Coleman said that they would not spend much time on Code Application Notices (CANs) and PINs. They want to show what OSHPD is working on and what is new.

Mr. Egan asked about the pervasiveness of the accessibility issue. An Interested Party spoke on behalf of industry that it is a huge challenge, with many designers having problems. Mr. Monson commented that the ADA is aligned with Title 24. Mr. Coleman

suggested going over the CAN if it is completed by then. Mr. Monson noted that many interpretations of the regulations are surfacing; the new regulations have spawned an industry of consultants. The group discussed the issue.

Mr. Coleman stated that he would attempt to get the CAN done during the next week. However, if OSHPD does not have something that definitive, he would rather not venture into the subject of accessibility. He suggested ways to rearrange the seminar schedule if the CAN is ready.

Ms. Janssen stated that she would have the template ready right away. For the next meeting on September 10, the group should do a dry run of all the presentations. Staff will need any minor edits by Friday, September 12 so the handouts can be printed.

Mr. Monson stated that drafts of all presentations were due to Ms. Janssen by September 1.

4. Other Education Opportunities for 2014

- **Webinar for Upcoming December 2014 Deadline**

Mr. Coleman stated that OSHPD has been advising facilities of looming deadlines and concerns about the status of their projects. SB 1661 projects are due to be in operation by December 2014; AB 499 projects must have certificates of occupancy or construction final on that date; SB 90 projects must have plans deemed ready for review with financial capacity documentation submitted to OSHPD. PIN 59 provides guidance

for the facilities. The Director's Office, the Agency, and the California Hospital Association (CHA) are aware of individual obstacles.

- **CMS proposed adoption of NFPA 99**

Roger Richter said that the issues that have arisen are the Life Safety Code and the Emergency Room humidity standard. A meeting of all the NFPA 99 players is scheduled for October 23 in Washington, D.C.

- **Technology Committee Forum-Workshop**

The Technology Committee will meet in September to discuss a future workshop.

- **IOR-Field Staff Workshop and Training Tools**

Mr. Coleman said that the vacancy for a Compliance Officer in Southern California has been filled, but the two supervisors have both been on vacation.

He added that OSHPD is close to having how-to guides for Skilled Nursing Facilities, and may provide training for IORs on their role and how to use the guides.

- **Discussion and Public Input**

There were no further comments.

5. Comments from the Public/Board Members on Issues not on this Agenda

There was no further discussion from the public or board members.

6. Adjournment

Mr. Monson adjourned the meeting at 11:46 a.m.

OSHPD Office of Statewide Health Planning and Development

Hospital Building Safety Board
400 R Street, Suite 200
Sacramento, California 95811-6213
(916) 440-8453
Fax (916) 324-9118
www.oshpd.ca.gov/Boards/HBSB/index.html

8/28/14

HOSPITAL BUILDING SAFETY BOARD
Education and Outreach Committee

MEETING NOTICE
Wednesday, September 10, 2014
10:00 a.m. — 4:00 p.m.

at the
Office of Statewide Health Planning and Development
400 R Street, Suite 452
Sacramento, CA 95811
(916) 440-8453

And, at the
Metropolitan Water District Headquarters
700 N. Alameda Street, Suite 2-546
Los Angeles, CA 90012
(213) 897-0166

Board Members: Arlee Monson, Chair; Eric Johnson, Vice-Chair; John Donelan; Lou Gilpin; Bert Hurlbut; Scott Karpinen

OSHPD Staff: Gary Dunger; Lorin Neyer

HBSB Staff: Linda Janssen, Executive Director; Cathy Kane; Evett Torres

MEETING AGENDA

NOTE: Agenda order is tentative and subject to change without prior notice. All times are approximate and subject to change. A 30-minute to one-hour lunch will be taken sometime during the day.

1. **Welcome and Introductions**

2. **Review the draft August 13, 2014 Meeting Report**
   - Discussion and public input

3. **"Hot Topics" Seminar Logistics Update**
   - Review of Dates, Venues and Logistics
   - Discussion and Public Input

4. **Preview of Seminar Presentations and Discussions**
   - Session #1 – Functional Program and Materially Alter (2013 CAC)
   - Sessions #2 – Standard Details and Pre-approved Certifications (OPD, OPM, OPL and PIN 58
   - Session #3 – Gateway to OSHPD Services (e-Services Demonstration)
   - Session #4 – OSHPD Developing Processes (OTC Smart Board Demonstration)
   - Discussion and Public Input

5. **Comments from the Public/Board Members on Issues not on this Agenda:**
   The Board will receive comments from the public/members at this time on matters not on the agenda. Matters raised at this time will be taken under consideration for placement on a subsequent agenda.

6. **Adjournment**

REMINDER: Please call (916) 440-8453 on Tuesday, September 9, 2014, after 3:00 p.m. to confirm that the meeting will be taking place as scheduled. The recording will verify the meeting date and location.

NOTE: Meeting facilities and restrooms are accessible to the physically disabled. If any special accommodations (assistive listening device, sign language interpreter, etc.) are needed, please contact Board Staff at (916) 440-8453. Requests should be made as soon as possible but no later than 10 business days prior to the meeting.

Parking:
Sacramento—There are garages at 500 R Street and CalPERS Plaza. CalPERS Plaza has two entrances: one on Fifth Street, north of R Street; and another on Q Street, between Fourth and Fifth Streets. All three charge $1.25/hour or $12/day. There are also 10-hour parking stations and meters around the perimeter of the building.
Los Angeles—There is valet service at the Metropolitan Water District Building that is available 8 am to 5 pm and they charge between $6 and $12. There is also Five Star Parking lot on Cesar Chavez Avenue and Alameda Street that charge $14/day or $2.00 every 20 minutes.

Questions? Call Board Staff at the above phone number.

The Functional Program

Functional Program

The Owner's Program

- **What the Owner Provides may not be a Functional Program**
  - **State the ideology or mission of the Hospital**
  - **Establish expectations for quality and costs by the Administration**
  - **How it meets their Strategic or Business Plans**
  - **Describe Key Components with the complexity of project scope**
- **The Program may need to develop along with the Design**
  - **The needs of the staff-users in an existing facility and their ability to Translate their Operations into a New Facility**
  - **The Project's Design may need to re-align the Program for Budget Constraints**
  - **The development of the Design may need to address issues not covered in the Owner's Program**

Functional Program

The Owner's Program

- **What Makes a Functional Program**
  - **Properly matches the Design for uses and locations of spaces**
  - **Reflects the minimum code required areas and elements**
  - **Provides for the necessary operational areas**
  - **Accounts for the support spaces needed for primary use areas**
  - **Identifies the requirements of building systems**

Functional Program

The Programming Process

- **Operational and Space Programming**
  - **The Detailed Functional Program is an end-product of a Process of Defining Space that meets the Owner and User needs and establish the Department Operational Models and the Inter-relationship of Departments that makeup the Hospital's healthcare delivery approach**

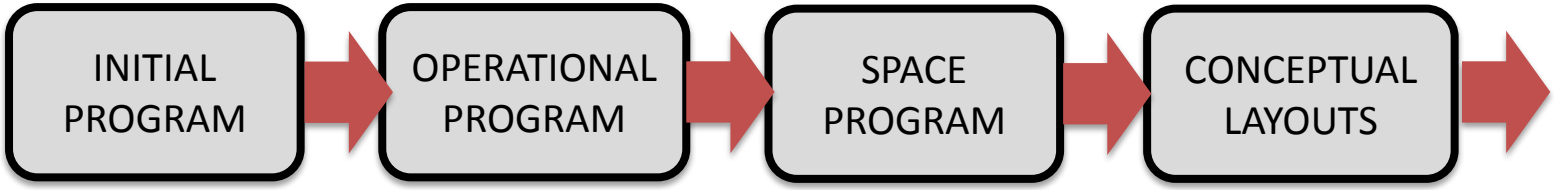

Functional Program

The Programming Process

- **Define Operations and Space**
  - **Adjacencies and Dependencies**
  - **Amenities and Accommodations of the Space**
  - **Equipment needs and Technology**

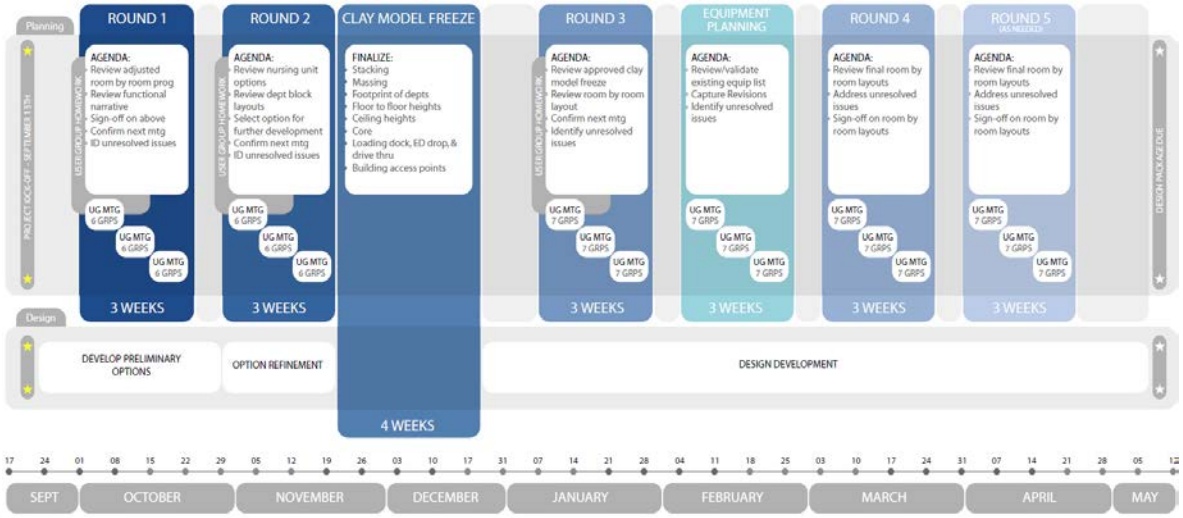

Functional Program

The Programming Process

- **Utilizing Metrics to Validate the Program Areas**
  - **"Benchmarking" similar projects to validate space requirements to Users and Owners**

Space/Room	LPCH	Academic Medical Center 1	Academic Medical Center 2	Community Hospital 1	Community Hospital 2	Other Current Industry Standards
Patient Rooms (Includes Toilet Area)						
Pediatric Acute Care Room	308	308	265-275	260	250	310+
Pediatric Intensive Care Room	300	308	265-275	250	250	270-330
NICU Room	180 / 150	180	120	170-190	200	155-200
Perinatal Rooms						
Labor, Delivery and Recovery Room (LDR)	360	415	280-315	370	358	380-450
Ante Partum / Post Partum Room	308	250	240-280	260	250	
C-section Room	450	500	400	500	500	
Perioperative						
Operating Room, Standard / Special	600 / 700	600 / 700	475 / 700	550 / 650	700	500-700
Holding, Pre-op	80	80	80-100	90	120	NA
Recovery, Open Bay / Private	100	100 / 120	80 / 100	90 / 120	120 / 130	100 / 120
Administrative Support						
Private Office, Standard / Special	110 / 120	90 / 120	90	100 / 140	100	100 / 120-140
Outpatient Clinics						
Exam Room, Standard / Special Needs	110 / 140	110 / 140	NA	NA	150 / 180	110 / 150

Functional Program

The Programming Process

- **Final Analysis of the Program and Budget**
  - **Department Level "Key Room Drivers" and "Grossing Factors"**

		1.1 Million BGSF Option Full Build-Out								
		458 New Beds 600 Total Beds 20% % Critical						Backfill Existing		
			Key Room Drivers							
Floor	Group Name	Program Target	# of Rooms	Room Type	TOTAL NSF	Grossing Factor	TOTAL DGSF	OSHPD	Non-OSHPD	TOTAL DGSF
	(07) Emergency Center	34,750	57		24,550	1.6	39,300	0	0	39,300
1	Triage	29,750	6	Triage / Fast Track	1,585	1.6	2,500			
1	Treatment		36 *19* *3* *1* *8* *5*	Treatment *General* *Psych* *Peds Psych* *Pediatrics* *Trauma*	7,700	1.6	12,300			
1	Clinical Decision Area	5,000	15	Observation	2,585	1.6	4,100			
	ED Imaging				Counted in Imaging Services					
1	Shared Support				12,680	1.6	20,300			
	ED Business Office								XXX	

Functional Program

The Complete Program "Picture"

- **Key Elements of a Detailed Functional Program**
  - Scope of Healthcare Services
  - Days/Hours of Operation
  - Workload Projections (occupancy rate and peaks/lows)
  - Key Drivers (i.e. primary room types, amenities, access, adjacencies, etc.)
  - Operational Assumptions
  - Inter, and Intra-Department Dependencies (e.g. Food Service for Med-Surg, Housekeeping, etc.)
  - Staffing and Provisions
  - Physical Environment Design Criteria
  - Building Systems
  - Unique Code Requirements
  - Flexibility and Future Considerations

Functional Program

The Complete Program "Picture"

Inter-Department Dependencies

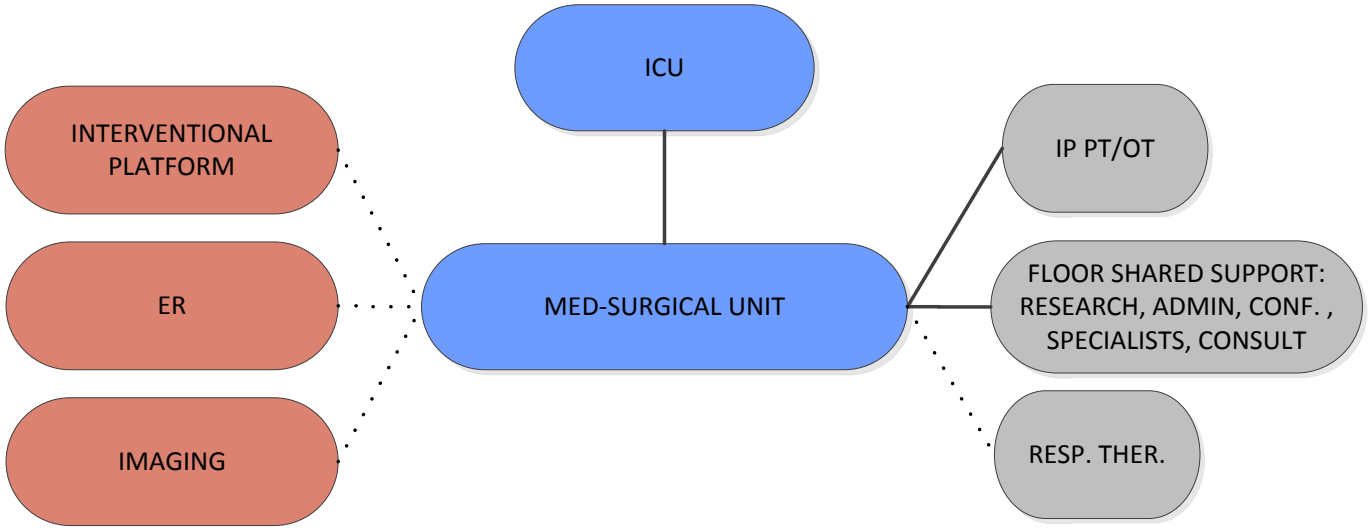

Functional Program

The Complete Program "Picture"

Intra-Department Dependencies

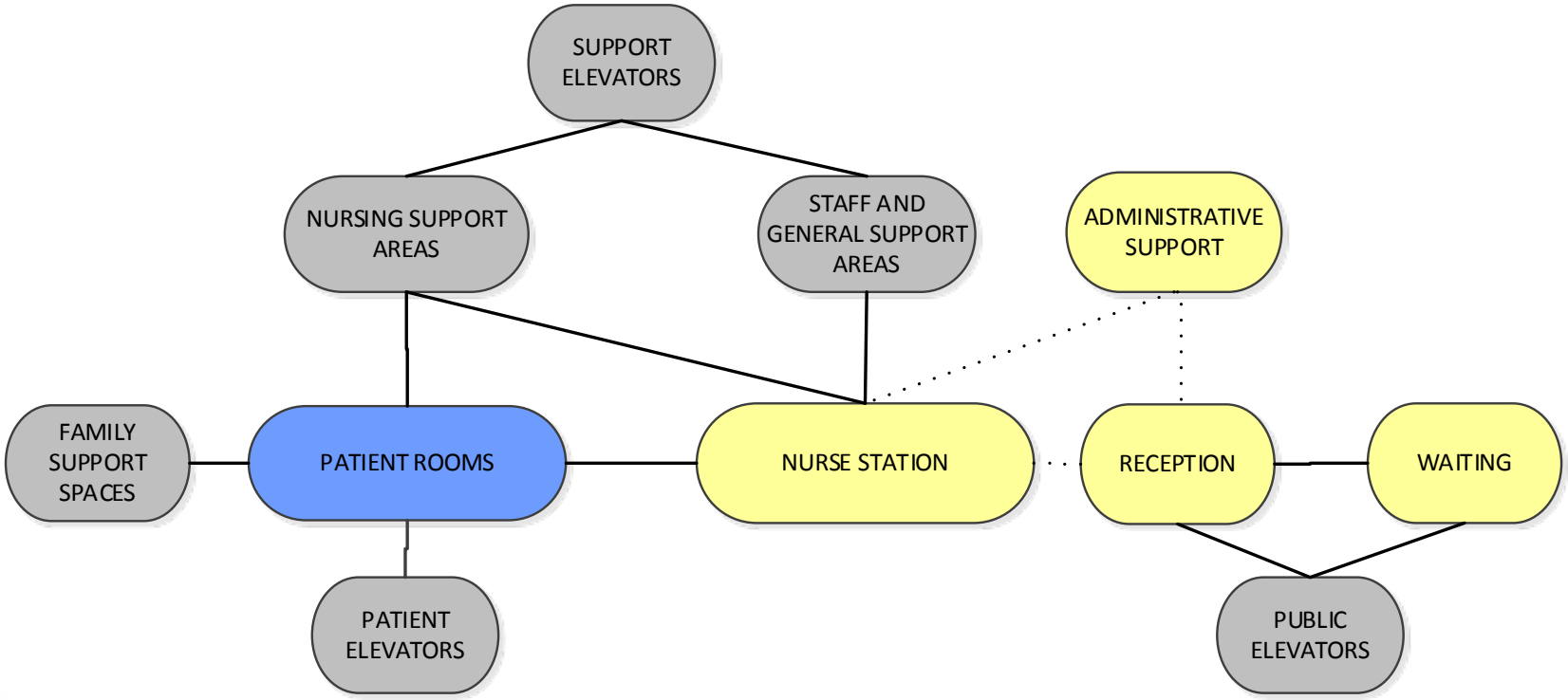

Functional Program

Narratives that Support the Design

- **Describes what is in the Project and what is not**
  - **Hospital Operations vs. MOB Support Functions**
  - **Types and Levels of Care**
- **Compliance with Chapter 1224 and 11B requirements**
  - **Description of Spaces that meet the Requirements of Basic Services and Supplemental Services "when provided"**
  - **"Code Minimum" Areas as well as Operational Needs**
  - **Space Functions that meet the Requirements of Accessibility**

Functional Program

Narratives that Support the Design

- **Challenges for the Programming and Design**
  - **Stacking Different Departments within the Same Structural Frame**
  - **Non-traditional Equipment or Innovative Rooms Layouts**
  - **De-Centralized Nurse Stations**
  - **ADA Requirements that are More Stringent**
  - **Encroachments into the "Clear Floor Area"**

Functional Program

o Some Considerations – The ICU Bedroom

- 200 Minimum CFA
- 13-feet Minimum Headwall
- 1-foot at Bed Head
- 5-feet at Bed Foot and one side
- Entry Door not in CFA
- Fixed Casework
- Modular Toilet
- Structural Encroachments

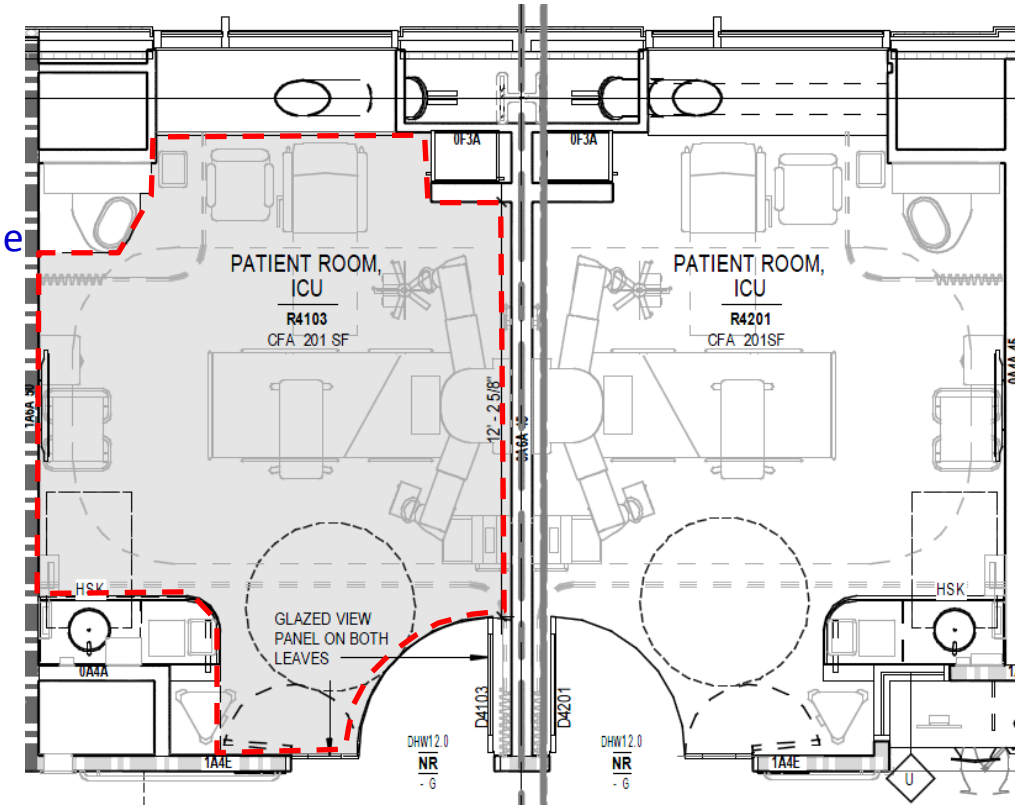

Functional Program

o Some Considerations – The LDR/LDRP Bedroom

- 250 Minimum SF
- 13-feet Minimum Dimension
- Crib Space Location
- Sleeping Space for Support
- Distinct Area for Resuscitation
- Entry Door Enchroachment allowed for LDR not LDRP

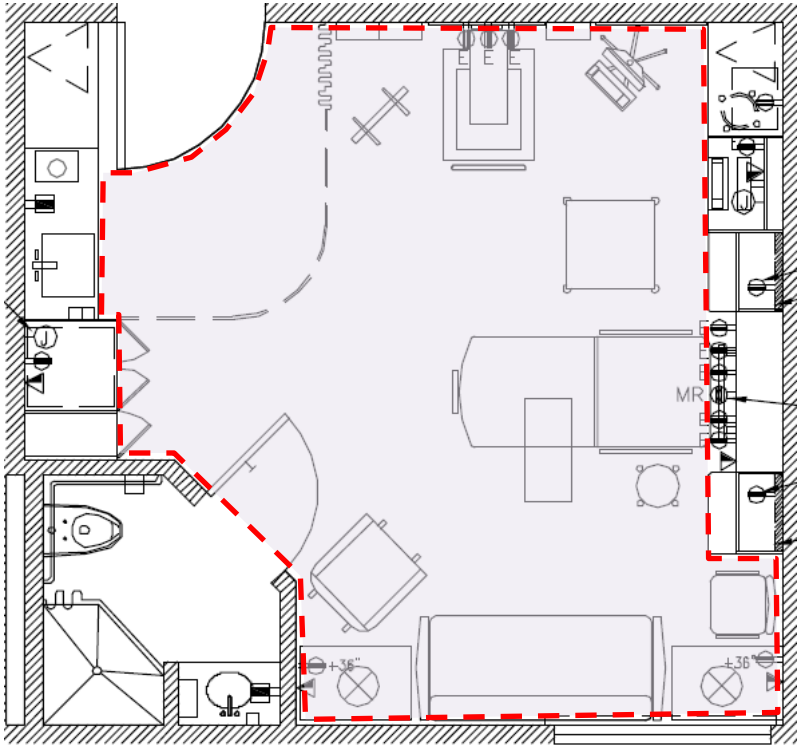

Functional Program

o Some Considerations – The Med-Surg Bedroom

- 120 Minimum SF
- 3-feet Minimum Clearances
- Toilet Room
- Wardrobe or Closet
- Handwashing Sinks
- Sleeping Space for Support?
- Nurse Servicing?

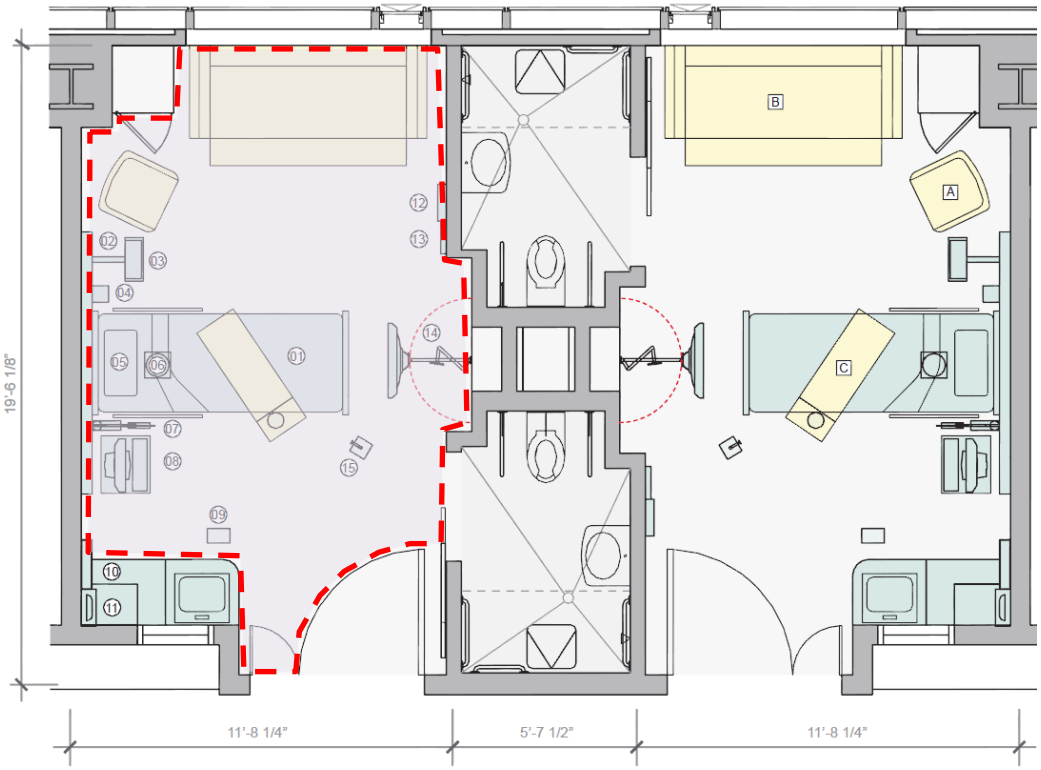

Functional Program

o "Recommended" Guidelines and Special Considerations

- Uses of Rooms for Different Types of Patient Acuity, Universal Care Units
- Special Accommodations for Family Space, Increased Accessibility Needs, Bariatric Rooms
- Specific needs for Isolation and Emergency Response Coordination

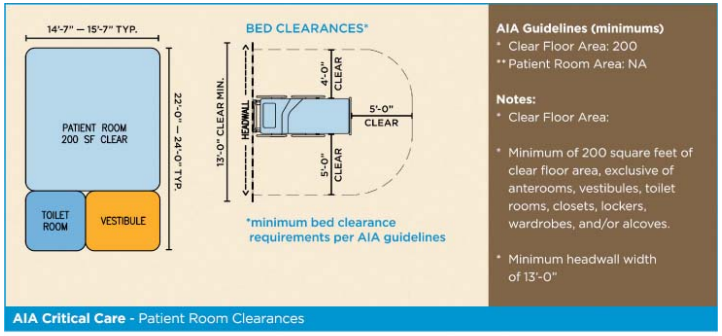

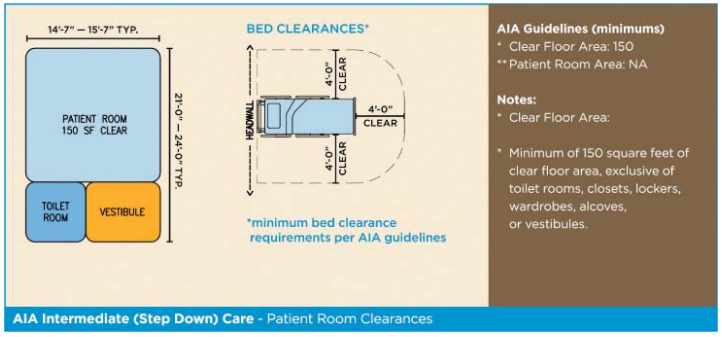

MATERIALLY ALTER

Definition of Materially Alter

Applies to construction projects or approved construction documents

- Alters the scope of the project
- Causes the project to be in noncompliance with the California Building Standards Code
- Causes an unreasonable risk to health and safety of patients, staff or public

Only changes that materially alter the work shall be submitted to OSHPD for review and approval **(As determined by OSHPD)!**

Amended Construction Documents (ACDs)

CAC 7-153. Addenda, change orders and instruction bulletins (Post Approval Document/Amended Construction Document)

(a) Changes in the work.
Work shall be executed in **substantial conformance** with the construction documents approved by the Office. Changes in the work shall be made by addenda, change orders, or instruction bulletins approved by the Office (classified as Post Approval Documents [PADs] and Amended Construction Documents [ACDs]).

Application for ACD

Submittal shall consist of:

- Application for Post Approval Document - Amended Construction Document Plan Review (OSH-FD-125)
- 2 sets of plans and specifications
- $250.00 non-refundable application fee

Do not submit the same ACD to different venues

- Will result in a non-refundable fee for each application
- Will result in a delay of the review

Changes That Do NOT Materially Alter

1. Clarification and interpretation of plans and specifications by the responsible design professional (Does not apply if SEOR must perform calculations to substantiate change)

2. Construction means and methods.

   Includes:
   - Construction sequencing
   - Coordination of the work
   - Methods of assembly/construction

   Does NOT include:
   - AMCs, i.e. weather protection of gypsum board
   - Temporary construction

Changes That Do NOT Materially Alter

3. Substitutions of equipment, products, or materials.
   - Code approved
   - Same function
   - Cannot increase any mechanical, electrical, structural load
   - Cannot change from one kind of equipment, product, or material to another, such as
     - Absorptive chiller to centrifugal chiller
     - Drilled-in anchors to concrete screw anchors
     - Top of wall fire-resistive material/design
     - Does not apply if SEOR must perform calculations to substantiate change

Changes That Do NOT Materially Alter

4. New details based on other approved details, in whole or in part
   - Referenced standards
   - Preapproved details
   - Reference to approved details must be shown

5. Final routing configuration of ducts, conduits, pipes, etc. where shown diagrammatically on the approved plans. Does not apply when
   - Additional fire/smoke dampers required
   - Non pre-approved seismic fittings or specially engineered braces or hangers are required
   - Does not apply if SEOR must perform calculations to substantiate routing/configuration

Changes That Do NOT Materially Alter

6. Dimensional changes to rooms that do not affect
   - Code required minimum dimensions
   - Code required minimum space requirements
   - Code required clearances
   - Code required air changes, pressure relationships, air balance design for the system, etc.
   - Sensitive areas/rooms may require an ACD

7. Relocation of doors, windows, electrical switches, outlets, plumbing fixtures, etc. that do not require additional changes to the work to make the relocation code compliant

Changes That Do NOT Materially Alter

8. Relocation or reconfiguration of cabinetry that does not
   - Affect code required minimum dimensions, room or space requirements, and required clearances
   - Reduce minimum storage requirements
   - Increase loads to supporting members

All construction documents, whether they materially alter the work or not, must be stamped and signed by the appropriate design professional.

All changes are subject to OSHPD filed staff as to whether or not the changes materially alters the work.

Architectural Examples

Non-Material Alterations

- Changes to wall types with same or increased ratings based on approved drawing details to resolve conflicts. Minor changes to locations of walls allowed as long as room use and occupant loads remain the same, and minimum area and dimension requirements are maintained.
- Changes to door swings that do not create non-compliant conditions for accessible clearances or egress requirements.
- Changes to increase ratings of protected door and window openings in walls where ratings are increased, based on project-approved drawing details.
- Lowering ceiling heights to 8-feet minimum (7-feet for soffits) with no effect to other systems documents, so long as requirements for exit ways, sight-lines to exit signs, required lighting levels, smoke detection and fire protection are maintained.
- Clarifications of room dimensions that do not reduce the required CBC area, minimum dimensions, or modify the required air changes in the room.
- Relocating registers, grills or lighting within a room space as shown on reflected ceiling plans, as long as the design requirements for the MEP systems are maintained.

Architectural Examples

Non-Material Alterations

- Moving doors, sinks or casework without affecting accessibility requirements, egress compliance or fire resistance ratings.
- Dimensional clarifications to resolve conflicts of materials or equipment, or to provide information missing from the approved plans or specifications. Verification shall be made by SEOR there is no impact to structural elements.
- Additions or revisions to the Testing, Inspection and Observation Program (TIO), without altering the intent of the original approved plans, specifications or code required tests - with the concurrence of IOR.
- Clarifications of finish materials that do not conflict with the applicable CBC requirements.
- Changes to non-rated and rated door hardware, not affecting accessibility requirements or ratings of fire assemblies or adversely affecting or altering ingress and egress as required by code.
- Revisions to casework that do not result in added scope, reduction of required minimum clearances and uses approved anchorage details.

Architectural Examples

Non-Material Alterations

- Clarifications that resolve missing or conflicting information on the original approved plans, without altering the design intent, adversely affecting or altering the means of egress, or causing a code violation.
- Adding soffits within the allowable height limit that would be constructed using the framing details provided in the originally approved documents, so long as requirements for exit ways, sight-lines to exit signs, required lighting levels, smoke detection and fire protection are maintained.
- Changes to ceilings and soffits when each is constructed with details approved in the original documents. Field conditions shall be confirmed by AOR and OSHPD-CO as appropriate to details.
- Changes to suspended ceiling seismic struts and bracings due to conflicts with other building elements when other approved or pre-approved details apply, and field conditions are confirmed by AOR. SEOR shall confirm changes as compliant.
- Relocating fixed medical and non-medical equipment that does not change the anchorage details, or impact other building systems. SEOR will confirm no impact on structural components.

Architectural Examples

Material Alterations

- Adding access controls to doors.
- Modifications to Section 1224 or 1224 of the CBC required minimum clearances affecting functionality of spaces.
- Elimination of code required spaces.
- Any modifications adversely affecting accessibility requirements in Chapter 11B, CBC.

Fire and Life Safety Examples

Non-Material Alterations

- Minor sprinkler head relocations (maximum 10 per zone), additional sprinkler heads (maximum 10 per zone) or minor re-routing of piping. All changes must comply with NFPA 13.
- Relocating rated doors within walls that require opening protection. New location must be within the original wall design.
- Substitutions of approved listed assemblies for providing a rated separation on 1-hour or 2-hour rated partition types used for temporary construction barriers (must comply with CAN 9-1401).
- Substitutions of listed fire protection products, originally listed on approved plans, shop drawings or deferred approval.
- Clarifications that resolve missing or conflicting information on the original approved plans, without altering the design intent or causing a code violation.
- Adding to or modifying the location of exit signs to match the built conditions and provide clear visibility, without changing the electrical circuiting and otherwise does not create a non-compliant condition. (such as mounting to exit stair enclosure walls)
- Minor relocation of fire alarm devices and or boxes (extinguishers, hose cabinets, etc) within the areas allowed by the code.

Fire and Life Safety Examples

Material Alterations

- Deletions of fire/smoke dampers, fire dampers or smoke dampers.
- Reclassifications of walls or assemblies that require opening protection.
- Modifications to any rated systems or penetration assemblies.
- Additions to sprinkler systems that changes the hydraulic calculations.
- Substitution of equivalent listed fire protection products that alter support or bracing or performance characteristics or requirements.

Structural Examples

Non-Material Alterations

- Dimensional clarifications omitted on original approved plans that do not alter original location, structural calculations, load path or seismic requirements.
- Changes to details at slab openings to coordinate with other building elements, as long as there is no impact to structural values of slabs or framing members, and applicable construction details are on the approved drawings.
- Penetrations thru slabs and load-bearing walls to accommodate construction coordination of MEP/FA systems that does not compromise the structural integrity of the slab or wall. Such penetrations may include the cutting of rebar as long as the structural integrity is maintained.
- Provision of alternate bracing details for interior architectural elements (partitions, soffits and ceilings) and MEP systems to meet specific conditions that vary from the approved details.
- Addition or modification of miscellaneous metal elements, either designed by the SEOR or other structural engineer when approved by the SEOR, where alternate means or methods are necessary for specific conditions, as long as the new load path does exceed the capacity of structural elements.

Structural Examples

Non-Material Alterations

- Detail clarifications for information to equipment, casework, etc. shown on original approved plans and not requiring changes to the structural calculations.
- Provision of alternate anchorage, tethering and bracing of equipment and furniture that is not required to be detailed per 2013 CAC 7-125 – i.e., items that do not exceed 400# mounted to the floor, or 20# hung from the floor above or 20# mounted to wall construction.
- Modifications to slab edge distances that do not exceed those shown on the structural engineer's cantilever condition approval.
- Substituting "in-kind" equipment manufacturers, brands or models that does not increase the original equipment weights, size, change locations, or anchorage. SEOR to confirm no change to loads on anchors or bracing. Changes to Special Seismic Certification requirements will be considered as a material change.
- Clarifications that resolve missing or conflicting information on the original approved plans, without altering the design intent or causing a code violation.

Structural Examples

Material Alterations

- Additions, deletions and/or substitutions of structural members.
- Span increases for gravity members and/or any span changes for lateral force resisting elements.
- Altering of connections.
- Modifications to original pre-approvals, proprietary or manufactured items.
- Reduction of stud sizes or gauge, changes to headers or their connections.
- Changes in routing of services/systems or utilities that may violate Section 1224.4, CBC.
- Any change that violates the requirements in Section 7-125, CAC.

Structural Examples

Approved Drawings

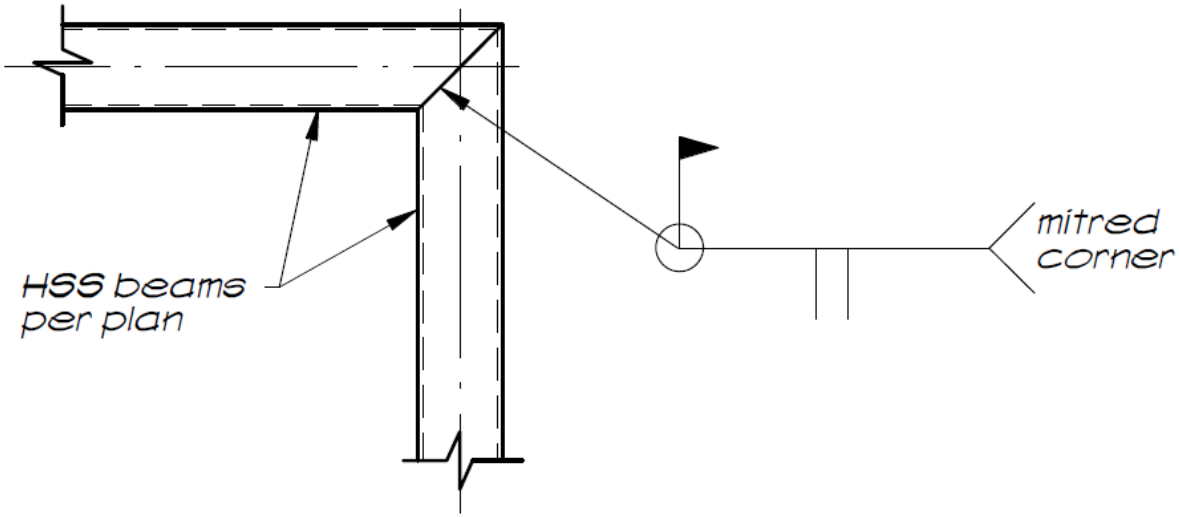

Structural Examples

Structural Examples

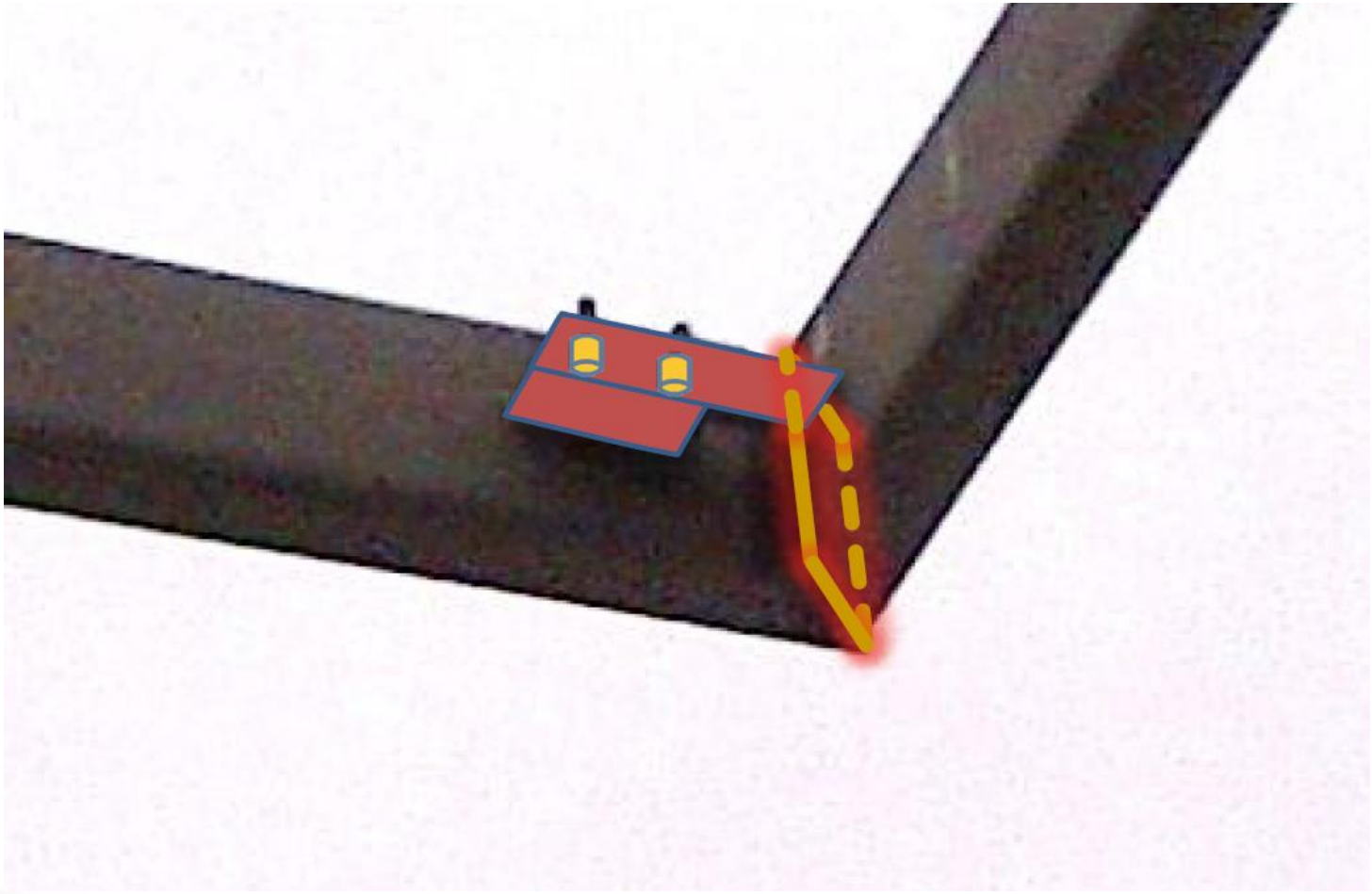

Structural Examples

As modified in the field

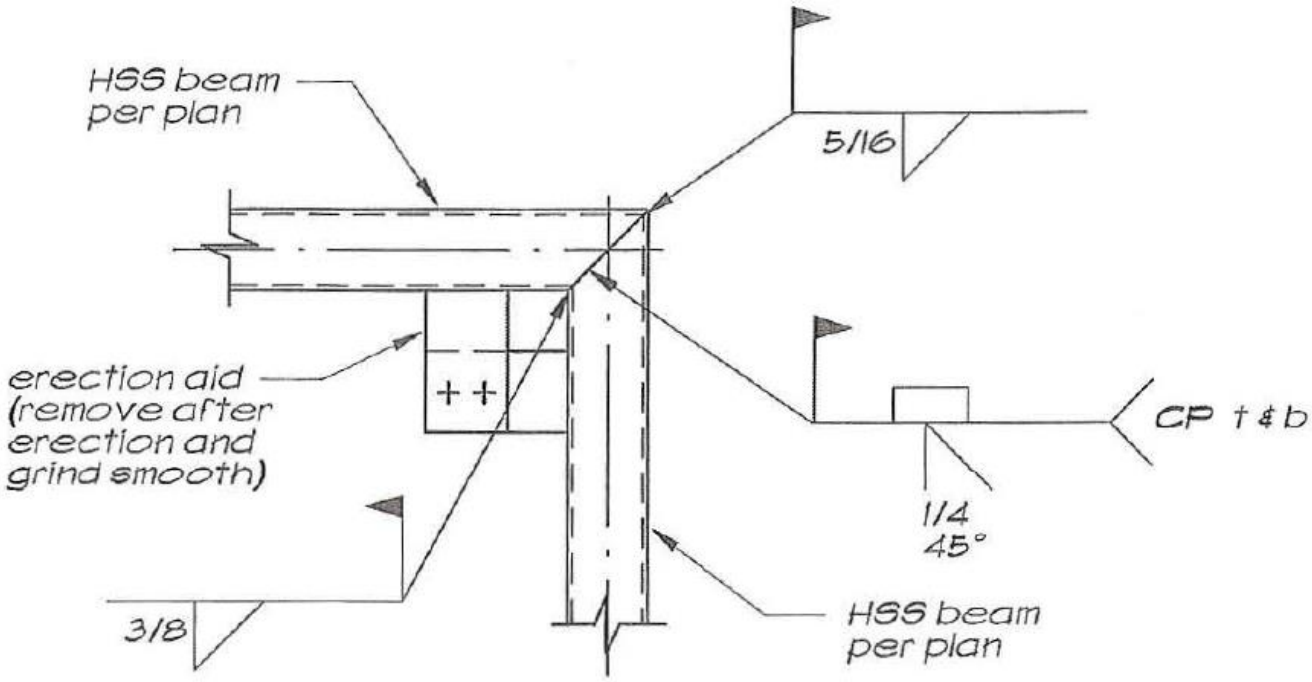

Applicable at canopy corners

Structural Examples

Approved Condition

TOLCO FIG. 109 CONCRETE DECK INSERT IN 3,000 PSI
LIGHTWEIGHT CONCRETE OVER METAL DECK - 20 GA (MIN.)

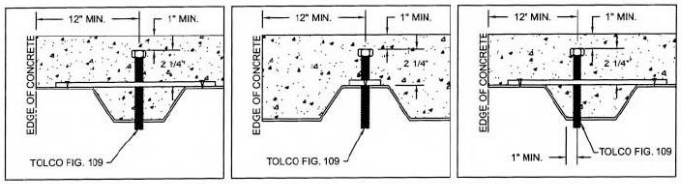

ANCHOR DIAMETER	MIN. ANCHOR EMBEDMENT DEPTH	MAX. HORIZONTAL SEISMIC LOAD W/ BRACE @ 45° (Lbs.)	MAX. ALLOWABLE VERTICAL LOAD (Lbs.)
3/8"	2 1/4"	560	572
1/2"	2 1/4"	660	579
5/8"	2 1/4"	680	715
3/4"	2 1/4"	700	1000
7/8"	2 1/4"	700	1000

NOTES:

1.) ALLOWABLE LOADS ARE FOR ANCHORS INSTALLED IN 3,000 PSI LIGHTWEIGHT CONCRETE.

2.) CALIFORNIA BUILDING CODE STATES: "ALL BOLTS SHALL BE ACCURATELY AND SECURELY SET PRIOR TO PLACEMENT OF CONCRETE..." FASTENERS OR JAMB NUT MAY BE USED. TYPICAL FOR ALL APPLICATIONS.

3.) MOUNTING HOLES ARE STANDARD. IF THE PLATE IS NOT MECHANICALLY SECURED TO THE DECK RIBS A JAMB NUT IS REQUIRED TO PREVENT THE ANCHOR BOLT FROM LAYING OVER WHEN CONCRETE IS POURED.

4.) STRUCTURAL ENGINEER OF RECORD SHALL VERIFY ADEQUACY OF THE STRUCTURE FOR THE TABULATED ALLOWABLE LOADS.

5.) SPECIAL INSPECTION SHALL BE PROVIDED PER CBC. THE SPECIAL INSPECTION MUST BE ON THE JOBSITE CONTINUOUSLY DURING ANCHOR INSTALLATION TO VERIFY ANCHOR TYPE, ANCHOR DIMENSIONS, HOLE DIMENSIONS, ANCHOR SPACING, EDGE DISTANCES, SLAB THICKNESS, ANCHOR EMBEDMENT AND TIGHTENING TORQUE.

6.) MINIMUM SPACING BETWEEN INSERTS SHALL BE THE GREATER OF 2 TIMES THE EMBEDMENT DEPTH, OR 12 TIMES THE BOLT DIAMETER.

A P P R O V E D
Fixed Equipment Anchorage
Office of Statewide Health Planning and Development
OPA- 0300 July 21, 2003
**** Valid for 3 Years Maximum ****
Bill Staehlin (916) 324-9106

1375 SAMPSON AVENUE
CORONA, CA 92879
P: (909) 737-5599
F: (909) 737-0330
TOLCO
Tolco is a brand of MSCO

REGISTERED PROFESSIONAL ENGINEER
ZUBAIR SHEIKH
No. 4039
Exp. 12-31-03
STRUCTURAL
STATE OF CALIFORNIA

[redacted]
ZUBAIR SHEIKH
STRUCTURAL ENGINEER S 4039
PAGE: 10 - 5 DATE: July 21, 2003

Structural Examples

Structural Examples

As modified in the field

TOLCO FIG. 109 CONCRETE DECK INSERT IN 3,000 PSI
LIGHTWEIGHT CONCRETE OVER METAL DECK - 20 GA (MIN.)

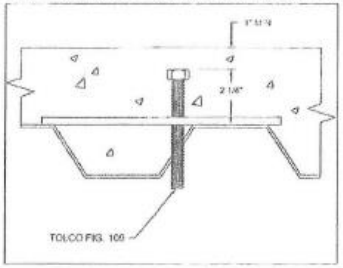

ANCHOR DIAMETER	MIN. ANCHOR EMBEDMENT ABOVE STEEL DECK	MAX. ALLOWABLE VERTICAL LOAD (Lbs.)
3/8"	2 1/4"	520
1/2"	2 1/4"	570
5/8"	2 1/4"	715
3/4"	2 1/4"	1000
7/8"	2 1/4"	1000

NOTES:

1.) ALLOWABLE LOADS ARE FOR ANCHORS INSTALLED IN 3,000 PSI LIGHTWEIGHT CONCRETE

2.) CALIFORNIA BUILDING CODE STATES: "ALL BOLTS SHALL BE ACCURATELY AND SECURELY SET PRIOR TO PLACEMENT OF CONCRETE." FASTENERS OR JAMB NUT MAY BE USED TYPICAL FOR ALL APPLICATIONS

3.) MOUNTING HOLES ARE STANDARD. IF THE PLATE IS NOT MECHANICALLY SECURED TO THE DECK RIBS A JAMB NUT IS REQUIRED TO PREVENT THE ANCHOR BOLT FROM LAYING OVER WHEN CONCRETE IS POURED

4.) STRUCTURAL ENGINEER OF RECORD SHALL VERIFY ADEQUACY OF THE STRUCTURE FOR THE TABULATED ALLOWABLE LOADS

5.) SPECIAL INSPECTION SHALL BE PROVIDED PER CBC. THE SPECIAL INSPECTION MUST BE ON THE JOBSITE CONTINUOUSLY DURING ANCHOR INSTALLATION TO VERIFY ANCHOR TYPE, ANCHOR DIMENSIONS, HOLE DIMENSIONS, ANCHOR SPACING, EDGE DISTANCES, SLAB THICKNESS, ANCHOR EMBEDMENT AND TIGHTENING TORQUE

6.) MINIMUM SPACING BETWEEN INSERTS SHALL BE THE GREATER OF 2 TIMES THE EMBEDMENT DEPTH [illegible]

7.) THE COMPONENT [illegible] 1.5 PER THE CALIFORNIA BUILDING CODE

Planning & Development/FDD
REVIEWED IN ACCORDANCE
THE REQUIREMENTS OF 24
APPROVED
AUG 08 2012

CHANGE ORDER# 34
INSTRUCTION BULLETIN#
DEFERRED APPROVAL#
ADDENDUM

APPROVED
Fixed Equipment Anchorage
Office of Statewide Health Planning and Development
OPA- 0300
on
OCTOBER 16, 2006
Anthony R. Pike
Anthony R. Pike (916) 654-1477

TOLCO
A BRAND OF NELCO
ZUBAIR SHEIKH
REGISTERED PROFESSIONAL ENGINEER
No. 4039
Exp 12-31-07
STRUCTURAL
STATE OF CALIFORNIA
STRUCTURAL ENGINEER S 4039
PAGE: 10-5A DATE: October 18, 2006

Mechanical Examples

Non-Material Alterations

- Dimensional clarifications.
- Relocating registers, grilles or diffusers within the same originally approved room, provided that the code does not contain specific air device location requirements (for example Airborne Infection Isolation Rooms, Operating Rooms, etc.)
- Changes to duct sizes or shapes (square, round or oval) without changing airflow, tap locations, air balance requirements or affecting other material locations.
- Minor rerouting of piping or ducts.
- Clarifications that resolve missing or conflicting information on the original approved plans, without changing the design intent or causing a code violation.

Material Alterations

- Altering room air balance to a non-compliant condition.
- Relocating diffusers or registers in a room that requires specific air device location requirements (for example Airborne Infection Isolation Rooms, Operating Rooms, etc.)

Mechanical Examples

What was specified

Mechanical Examples

What was substituted

Action Required: OSHPD review as a PAD

Electrical Examples

Non-Material Alterations

- Clarifications on single line drawings, without altering the original approved drawings.
- Relocating or deleting receptacles and/or switches, without causing non-conformance with the California Electrical Code (CEC).
- Modifications to original pre-approvals, proprietary or manufactured items, without changing the design intent.
- Clarifications to resolve missing or conflicting information on the original approved plans, without changing the design intent or causing a code violation.

Material Alterations

- Adding information to drawings or specifications resulting in non-compliance with Article 517, CEC.
- Modifications to original pre-approvals, proprietary, listed, labeled or manufactured items.

Electrical Examples

What was specified

Electrical Examples

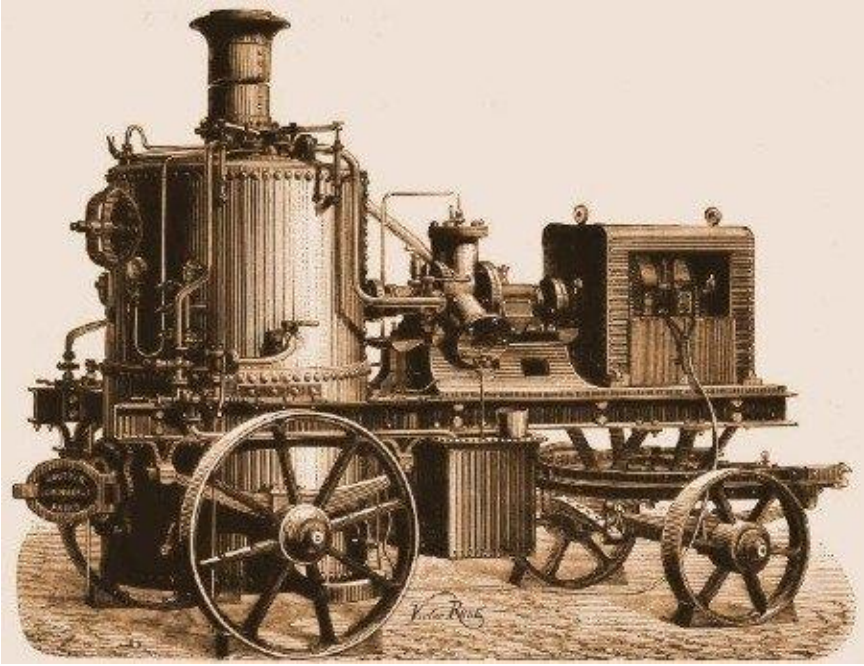

What was substituted

Action Required: OSHPD review as a PAD

Alternate Solutions Example No. 1

Ducts interfere with ceiling wire installation

- A/E issues a response to RFI to install trapeze assemblies per approved details
- Category: Interpretation/clarification
- Action required: OSHPD field staff review of RFI

Alternate Solutions Example No. 2

Ducts interfere with ceiling wire installation

- A/E issues a response to RFI to shift ceiling grid pattern one foot east so that hanger wire locations will no longer interfere
- Category: NMA
- Action required: OSHPD initials the RFI response to indicate concurrence that the change is “non-material”

Alternate Solution Example No. 3

Ducts interfere with ceiling wire installation

- A/E issues a response to RFI to use an OSHPD Pre-approved detail
- Category: NMA
- Action required: OSHPD initials the RFI response to indicate concurrence that the change is “non-material”

Alternate Solution Example No. 3

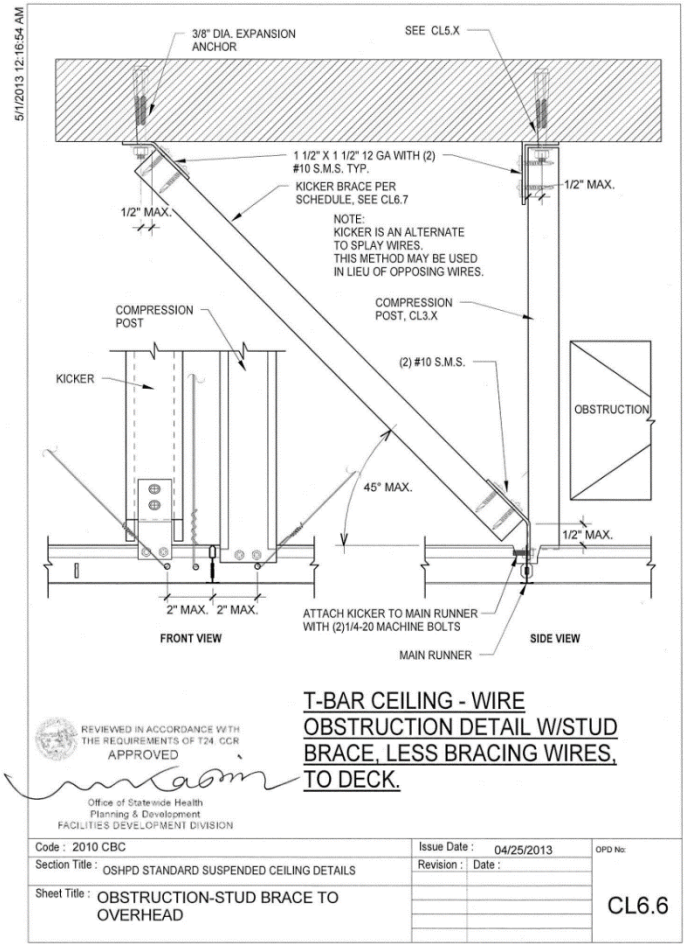

Alternate Solutions Example No. 4

Ducts interfere with ceiling wire installation

- A/E issues a response to RFI to install an alternative system with new details
- Category: PAD
- Action required: OSHPD review as a PAD

Documenting Non-Materially Alter Changes

- Non-material changes must have the concurrence of OSHPD field staff prior to proceeding with the work
- Project DPOR shall maintain a RFI Log and/or Change Log of all instruments used to give the contractor directions which are non-material
- DPOR is responsible for “categorizing” all documents issued as:
  - Interpretation/clarifications
  - NMAs
  - PADs

Documenting Non-Materially Alter Changes

- The log should be reviewed by the DPOR/IOR and appropriate FDD staff on an as needed and regular basis
- IOR responsibility increases from just reviewing FDD approved contract documents to also reviewing and inspecting to issued non-material changes
- FDD staff initials and dates NMA document(s) as concurrence of a non-material change
- When applicable, written notification by FDD staff as concurrence of a non-material change (e-mail, field report)

Documenting Non-Materially Alter Changes

- FDD will not “approval stamp” non-material changes
- Non-material changes shall be issued under the responsibility of the design professional
- Any drawings required shall be stamped and signed by the appropriate design professional
- Non-material changes are not submitted as Post Approval Documents for plan review and approval

END

Session #2- Standard Details

Standard Details

This department store used to sell entire houses in a DIY kit.

Standard Details

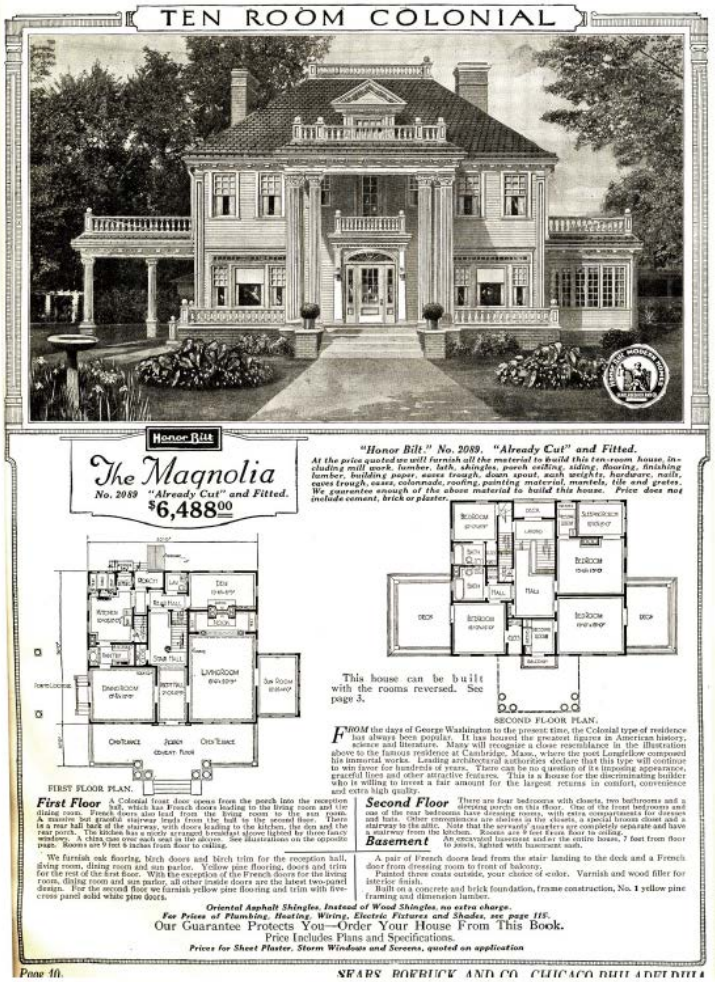

TEN ROOM COLONIAL

Honor Bilt

The Magnolia

No. 2089 "Already Cut" and Fitted.

$6,488.00

"Honor Bilt." No. 2089. "Already Cut" and Fitted.

At the price quoted we will furnish all the material to build this ten-room house, including mill work, lumber, lath, shingles, porch ceiling, siding, flooring, finishing lumber, building paper, sash weights, hardware, nails, eaves trough, eaves, colonnade, roofing, painting material, mantels, tile and grates. We guarantee enough of the above material to build this house. Price does not include cement, brick or plaster.

FIRST FLOOR PLAN.

SECOND FLOOR PLAN.

This house can be built with the rooms reversed. See page 3.

FROM the days of George Washington to the present time, the Colonial type of residence has always been popular. It has housed the greatest figures in American history, science and literature. Many will recognize a close resemblance in the illustration above to the famous residence at Cambridge, Mass., where the poet Longfellow composed his immortal works. Leading architectural authorities declare that this type will continue to win favor for hundreds of years. There can be no question of its imposing appearance, graceful lines and other attractive features. This is a house for the discriminating builder who is willing to invest a fair amount for the largest returns in comfort, convenience and extra high quality.

First Floor A Colonial front door opens from the porch into the reception hall, which has French doors leading to the living room and the dining room. French doors also lead from the living room to the sun room. A massive but graceful stairway leads from the hall to the second floor. There is a rear hall back of the stairway, with doors leading to the kitchen, the den and the rear porch. The kitchen has a nicely arranged breakfast alcove lighted by three fancy windows. A china case over each seat in the alcove. See illustrations on the opposite page. Rooms are 9 feet 6 inches from floor to ceiling.

Second Floor There are four bedrooms with closets, two bathrooms and a sleeping porch on this floor. One of the front bedrooms and one of the rear bedrooms have dressing rooms, with extra compartments for dresses and hats. Other conveniences are shelves in the closets, a special broom closet and a stairway to the attic. Note that the servants' quarters are completely separate and have a stairway from the kitchen. Rooms are 9 feet from floor to ceiling.

Basement An excavated basement under the entire house, 7 feet from floor to joists, lighted with basement sash.

We furnish oak flooring, birch doors and birch trim for the reception hall, living room, dining room and sun parlor. Yellow pine flooring, doors and trim for the rest of the first floor. With the exception of the French doors for the living room, dining room and sun parlor, all other inside doors are the latest two-panel design. For the second floor we furnish yellow pine flooring and trim with five-cross panel solid white pine doors.

A pair of French doors lead from the stair landing to the deck and a French door from dressing room to front of balcony.

Painted three coats outside, your choice of color. Varnish and wood filler for interior finish.

Built on a concrete and brick foundation, frame construction, No. 1 yellow pine framing and dimension lumber.

Oriental Asphalt Shingles, Instead of Wood Shingles, no extra charge.

For Prices of Plumbing, Heating, Wiring, Electric Fixtures and Shades, see page 115.

Our Guarantee Protects You—Order Your House From This Book.

Price Includes Plans and Specifications.

Prices for Sheet Plaster, Storm Windows and Screens, quoted on application

Page 16. SEARS, ROEBUCK AND CO. CHICAGO BUILDERS DEPT.

Sears

Pin 51

Facilities Development Division
Office of Statewide Health Planning and Development
400 R Street, Suite 200 • Sacramento, CA 95811 • (916) 440-8300
700 N. Alameda Street, Suite 2-500 • Los Angeles, CA 90012 • (213) 897-0166

POLICY INTENT NOTICE (PIN)

SUBJECT

Use of OSHPD Pre-Approved Details

PIN: 51

Effective: 8/16/2011
Revised: 12/5/2013

PURPOSE

This Policy Intent Notice provides a guideline for the implementation and use of the OSHPD Pre-Approved Details.

BACKGROUND

Health & Safety Code §129875 states, in part, *"The office shall include provisions for … the preapproval of projects that comply with the requirements for which the office has developed standard architectural or engineering detail, or both standard architectural and engineering detail."*

POLICY

The use of the OSHPD Pre-Approved Details will be allowed with the following conditions and requirements:

1. The use of pre-approved details is at the discretion of the registered design professional(s) listed on the OSHPD plan review application or the OSHPD building permit application. The OSHPD does not mandate the use of pre-approved details for any condition. Use of project-specific details in lieu of pre-approved details is always acceptable.

2. Pre-approved details give no consideration to suitability for use in a specific application, compatibility with other building systems, appropriate use of materials or design, appearances, etc. The registered design professional in conjunction with the registered design professional in responsible charge, listed on the plan review application or the building permit application, shall review all such qualities, features, and/or properties to ensure code compliance, appropriate integration with other building systems, and proper design for the project-specific conditions and installation.

3. The specification and use of pre-approved details does not preempt the owner from the plan approval and building permit process. Construction documents shall be submitted to the OSHPD for review and approval and issuance of a building permit prior to the start of construction.

4. When pre-approved details are used, they shall be incorporated into the construction document plans. Incorporation by reference only is not permitted.

5. Pre-approved details submitted as part of the construction documents during the plan review process will not be subject to additional plan review provided they are incorporated without any modification. However, applicability of pre-approved details for specific project conditions shown on the construction documents shall be evaluated during the plan review process.

6. Pre-approved details submitted after the construction documents have been approved and a building permit has been issued shall be used and/or processed in accordance with Code Application Notice 2-107.4 "Amended Construction Documents" (for projects submitted on or after January 1, 2014, California Administrative Code, Section 7-153 shall be applicable). Pre-approved details may be applied as alternates to the approved details shown on the permitted construction documents only on a one for one basis and with written consent of the registered design professional and the registered design professional in responsible charge and in concurrence with OSHPD field staff. Pre-approved details will not be subject to additional plan review provided they are incorporated without any modification. Pre-approved details are subject to field confirmation during which the applicability of pre-approved details for specific project conditions shall be evaluated.

7. Pre-approved details to be incorporated into the work after start of construction shall be included in the construction documents, either through the amended construction document process, the Request for Information (RFI) process, or other process agreed upon by the registered design professional and OSHPD field staff. Incorporation of pre-approved details which would result in an addition or change to the scope of the work, use or function must be reviewed with OSHPD field staff for a materially alter determination prior to construction.

8. The use of pre-approved details must strictly comply with all manufacturer's instructions, conditions, special requirements, etc. which are a part of the pre-approval.

9. Conditions not covered by a pre-approved detail shall be substantiated with calculations, drawings, specifications, etc., stamped and signed by the registered design professional and signed by the registered design professional in responsible charge listed on the plan review application or building permit application and must be submitted to the OSHPD for review and approval prior to construction.

Original signed	12/5/13
Paul Coleman	Date

Partition Wall Details

2007 CBC

STANDARD

PARTITION WALL

DETAILS

Partition Wall Details

- 2007, 2010 & 2013 Code Cycles
- 40 Details

Partition Wall Details

Detail #1-
Handrail Backing

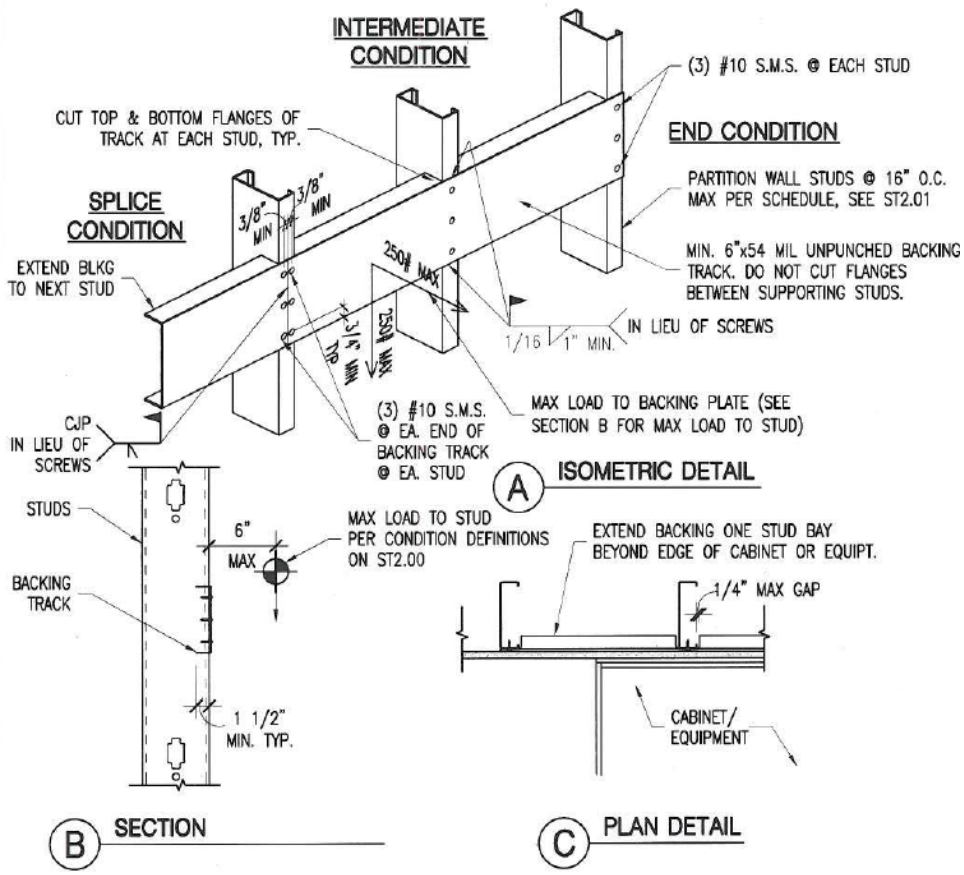

BACKING PLATE DETAIL TYPE 1

NOTES:

1. BACKING FOR CABINETS OR EQUIPMENT EXCEEDING THIS LIMIT SHALL BE DESIGNED AND DETAILED BY RDP IN RESPONSIBLE CHARGE.
2. ST5.01 MAY BE USED FOR ATTACHMENT OF CABINETS OR EQUIPMENT DISTRIBUTING LESS THAN 20# PER STUD (CENTER OF GRAVITY LESS THAN 6" FROM FACE OF STUD).
3. NOTCHING OR CUTTING OF BACKING PLATE IS NOT PERMITTED EXCEPT AS SHOWN.

Partition Wall Details

Detail #2-
Top Track

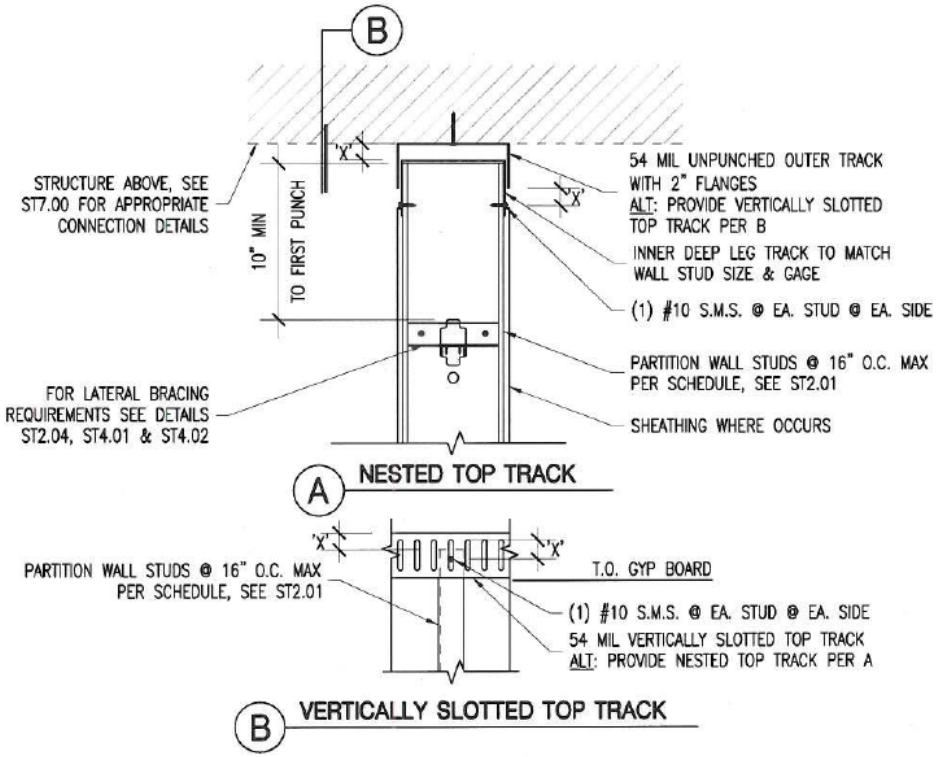

NOTES:

1. DO NOT CONNECT OUTER TRACK TO INNER TRACK OR STUDS (DETAIL A ONLY).
2. DO NOT CONNECT WALL FINISH TO OUTER TRACK (DETAILS A & B).
3. GAP 'X' – BY RDP IN RESPONSIBLE CHARGE, 1/2" MIN. TO 3/4" MAX.
4. RDP IN RESPONSIBLE CHARGE TO VERIFY "UL" RATING FOR HEAD OF WALL ASSEMBLY. APPROVED FIRE RESISTANT ASSEMBLY REQUIRED.
5. ONLY VERTICAL SLIP REQUIRED. HORIZONTAL, IN-PLANE SLIP NOT REQUIRED EXCEPT AT DETAIL ST7.08.
6. SEE TOP CONNECTION DEMAND SCHEDULE ON ST6.11.
7. LATERAL BRACING ONLY REQUIRED IF GYP BOARD IS NOT FULL HEIGHT ON BOTH SIDES OF PARTITION WALL SEE ST2.06, ST4.00 & ST4.01.
8. DETAIL APPLIES TO ALL PARTITION WALL CONDITIONS & ALL S_{DS} CATEGORIES.

Partition Wall Details

Detail #3-
Wall Elevations

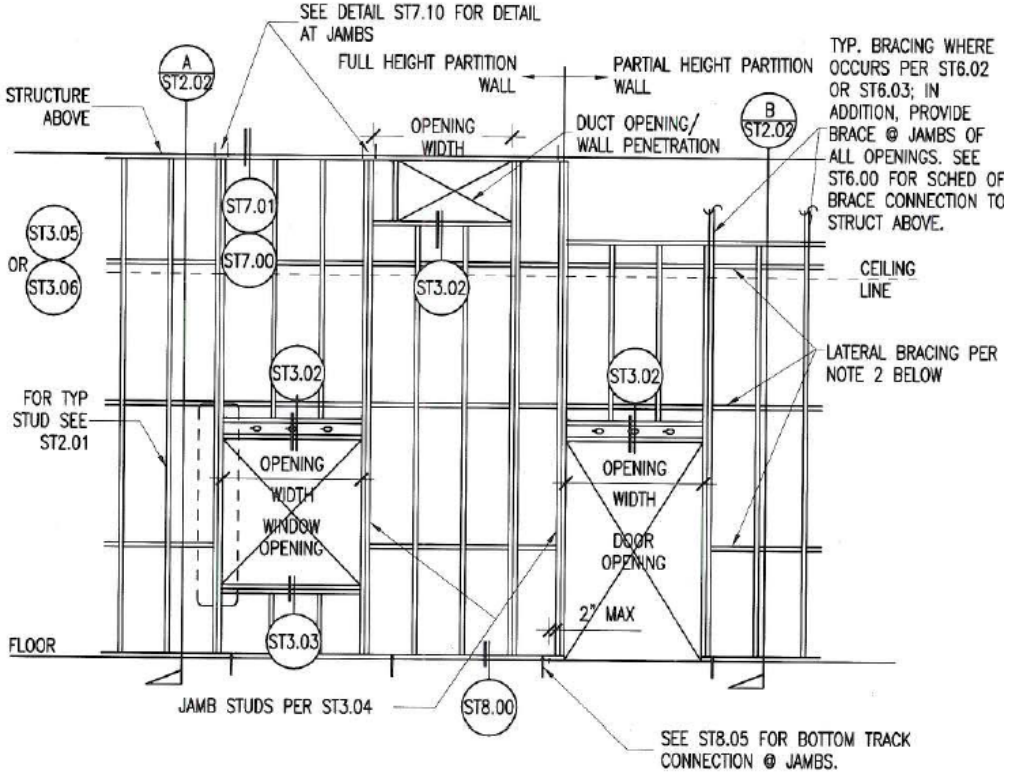

PARTITION WALL ELEVATION

NOTES:

1. ATTACHMENT OF CEILING, EQUIPMENT, ETC. TO THE JAMB, HEADER OR STUD ABOVE THE HEADER IS NOT PERMITTED WITHOUT THE APPROVAL OF THE RDP IN RESPONSIBLE CHARGE & OSHPD.
2. LATERAL BRACING PER ST4.00 & ST4.01 @ 4'-0" O.C. MAX. LATERAL BRACING NOT REQUIRED WHERE GYP. BOARD OCCURS ON BOTH SIDES OF PARTITION WALL. LATERAL BRACING NOT REQUIRED WHERE GYP. BOARD IS ON AT LEAST ONE FACE AND WALL LENGTH BETWEEN JAMB OR CORNER STUDS IS <=32" OR UNBRACED VERTICAL FRAMING IS <=48".
3. SEE ST2.07 FOR CONDITION AT OVERLAPPING OPENINGS.

Suspended Ceiling Details

2010 CBC
STANDARD
SUSPENDED CEILING
DETAILS
FOR
ACOUSTICAL TILE OR
LAY-IN PANEL CEILINGS

Suspended Ceiling Details

- 2010 & 2013 Code Cycles
- 33 Details

Suspended Ceiling Details

Detail #1-
Ceiling at Cove Light

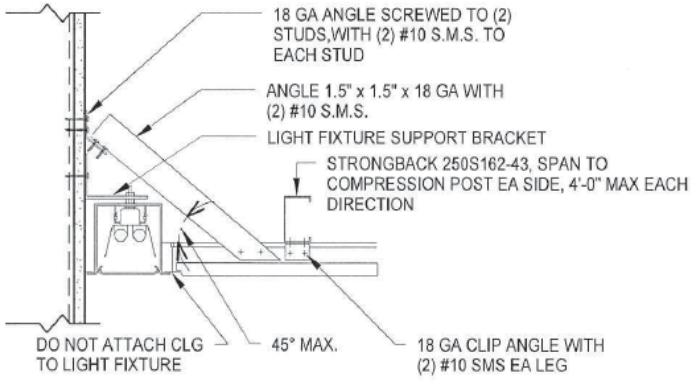

LOCATIONS WITHOUT CROSS JOISTS

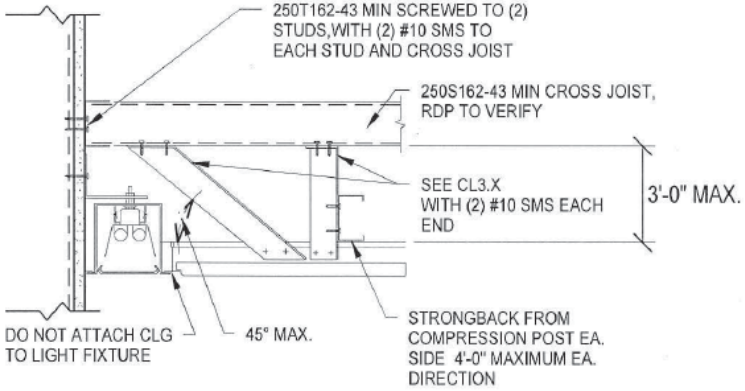

LOCATIONS WITHOUT CROSS JOISTS

Suspended Ceiling Details

Detail #2-
Channel
Compression Post

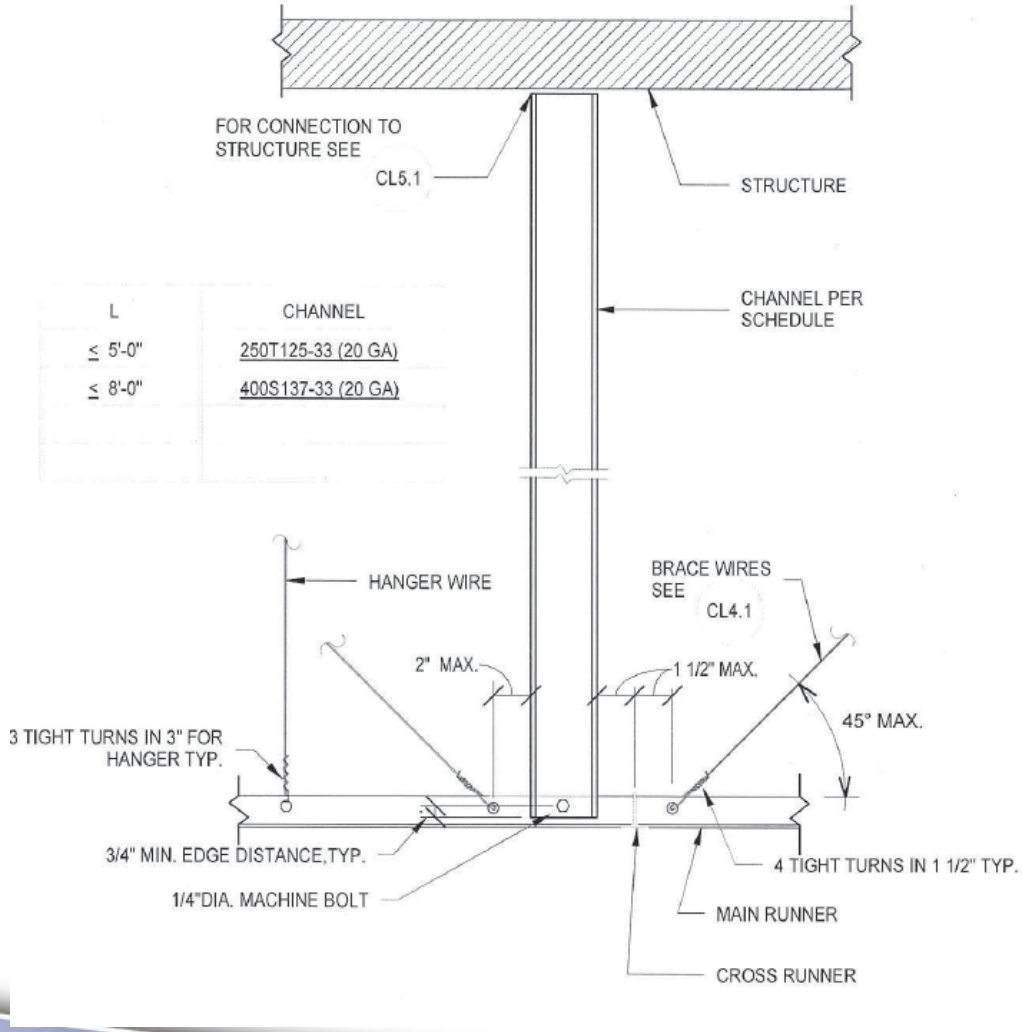

Suspended Ceiling Details

Detail #3- Obstruction at Splay Wire

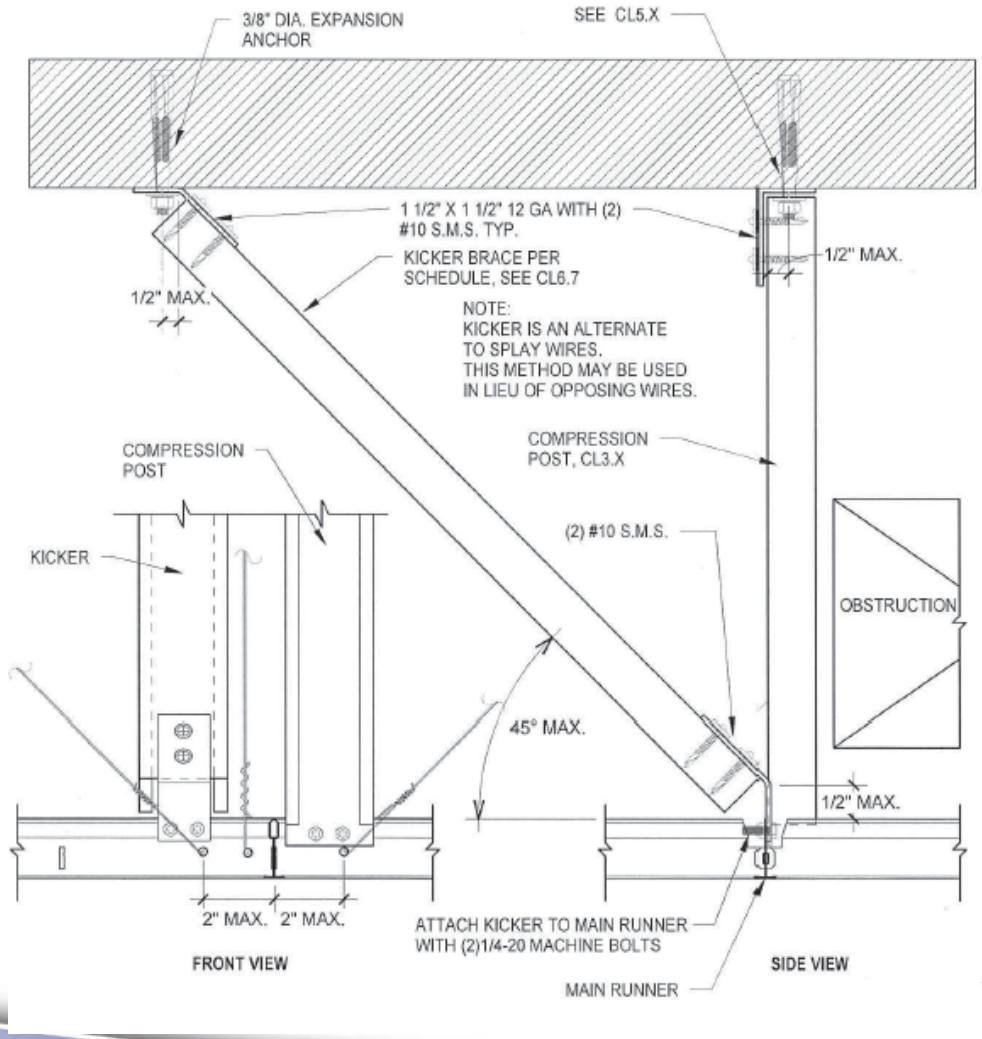

T-BAR CEILING - WIRE OBSTRUCTION DETAIL W/STUD BRACE, LESS BRACING WIRES, TO DECK.

Gypsum Board Ceiling Details

2013 CBC

STANDARD

GYPSUM BOARD

CEILING DETAILS

FOR

SUSPENDED AND JOIST

FRAMING CONSTRUCTION

(NON-ACCESSIBLE, SINGLE LAYER GYPSUM BOARD CEILING)

Gypsum Board Ceiling Details

- 2013 Code Cycle
- 39 Details

Gypsum Board Ceiling Details

Detail #1-
Bracing Wire to
Metal Stud

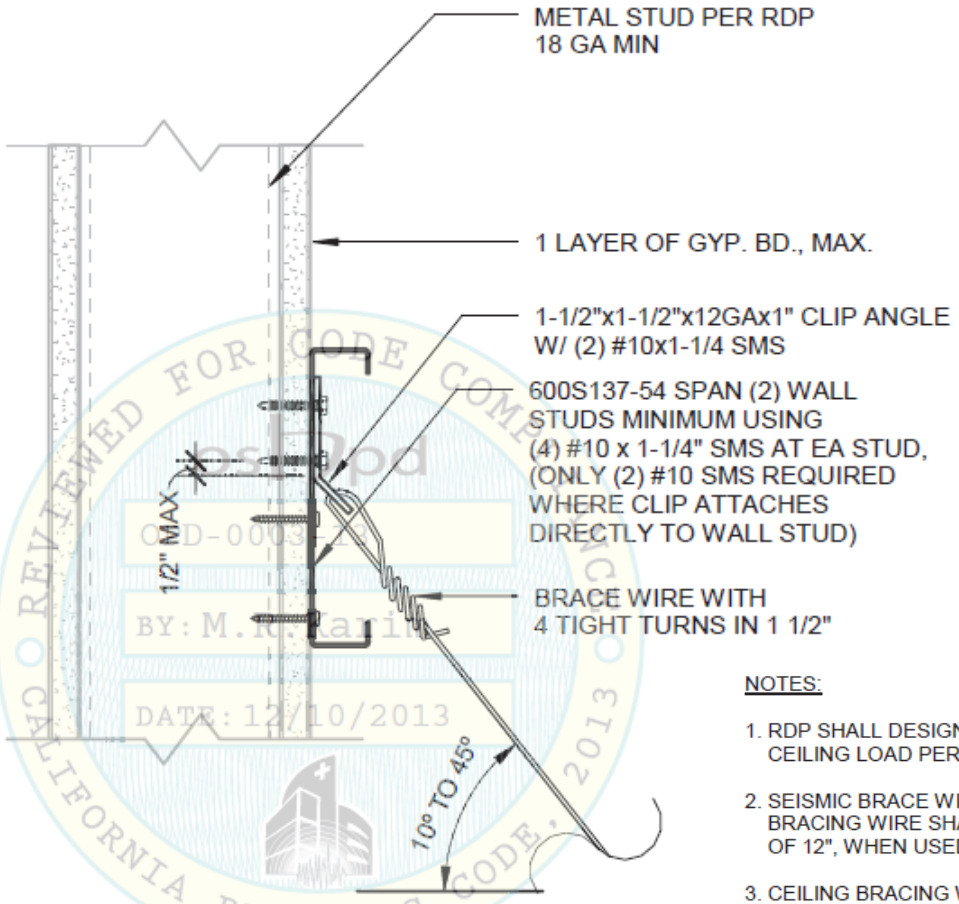

NOTES:

1. RDP SHALL DESIGN FRAMING WALL TO CARRY THE CEILING LOAD PER NOTE#2.
2. SEISMIC BRACE WIRE FORCE = 473 LBS (ASD LEVEL). BRACING WIRE SHALL HAVE A MINIMUM STRETCH LENGTH OF 12", WHEN USED AT FREE JOINT.
3. CEILING BRACING WIRE SHALL NOT BE ATTACHED TO WALL ON "FREE JOINT" SIDE OF CEILING.

REVIEWED FOR CODE COMPLIANCE
OSHPD
CCD-0003
BY: M.R.Karim
DATE: 12/10/2013
CALIFORNIA BUILDING CODE 2013

Gypsum Board Ceiling Details

Detail #2-
Suspended
Ceiling Bracing

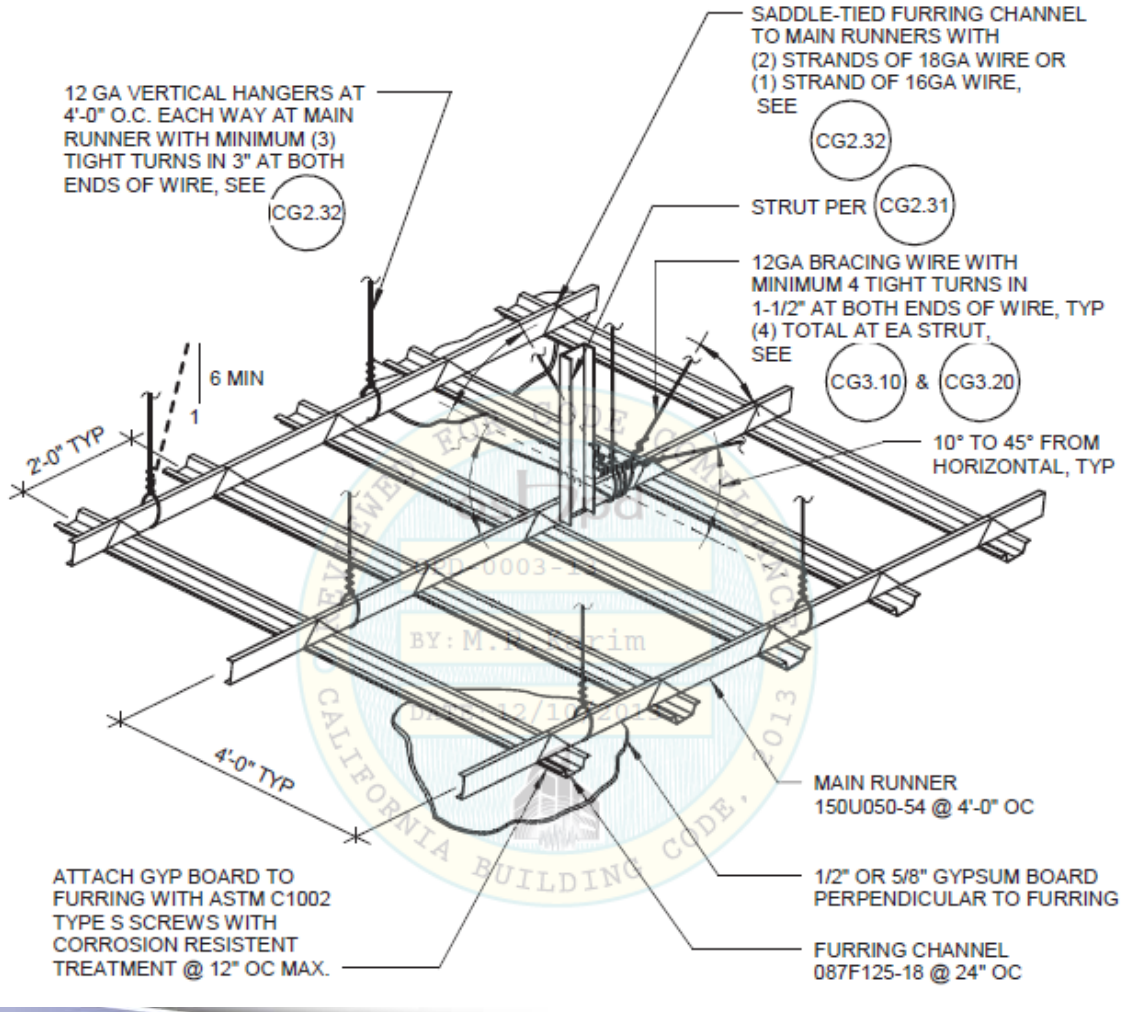

Gypsum Board Ceiling Details

Detail #3-
Strut to Timber Supports

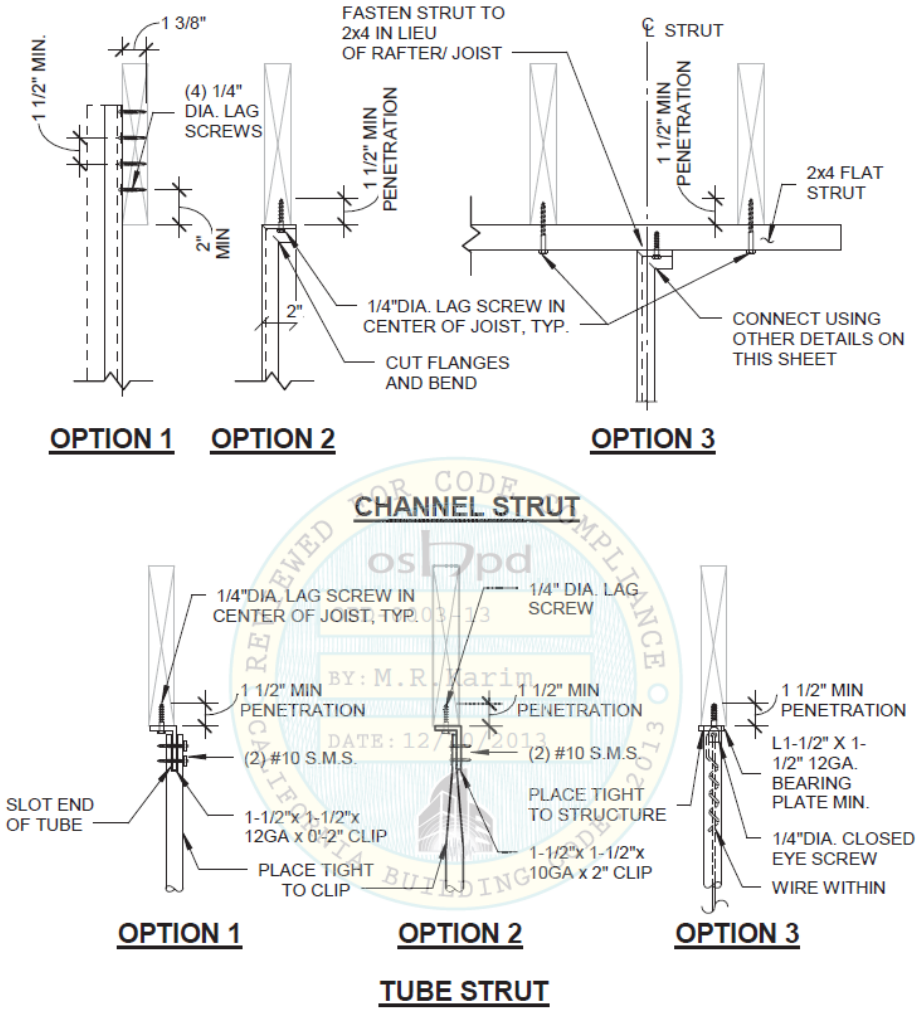

Fire-Resistive Details

2013 CBC
FIRE-RESISTIVE
STANDARD
DETAILS

Fire-Resistive Details

- 2013 Code Cycle
- 39 Details

Fire-Resistive Details

Detail #1-
5 Sided Box

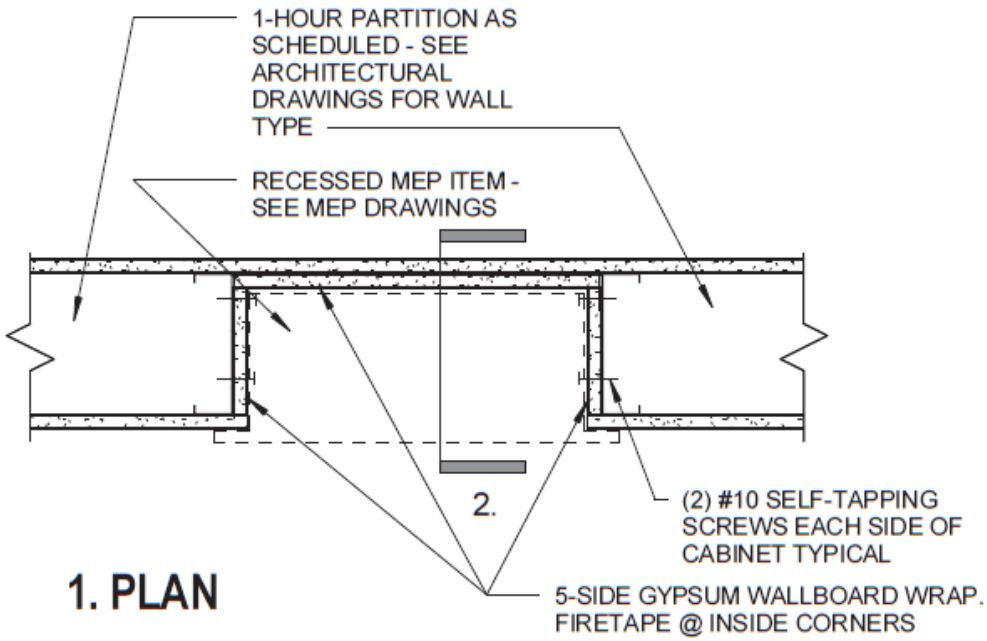

Fire-Resistive Details

Detail #1-
5 Sided Box

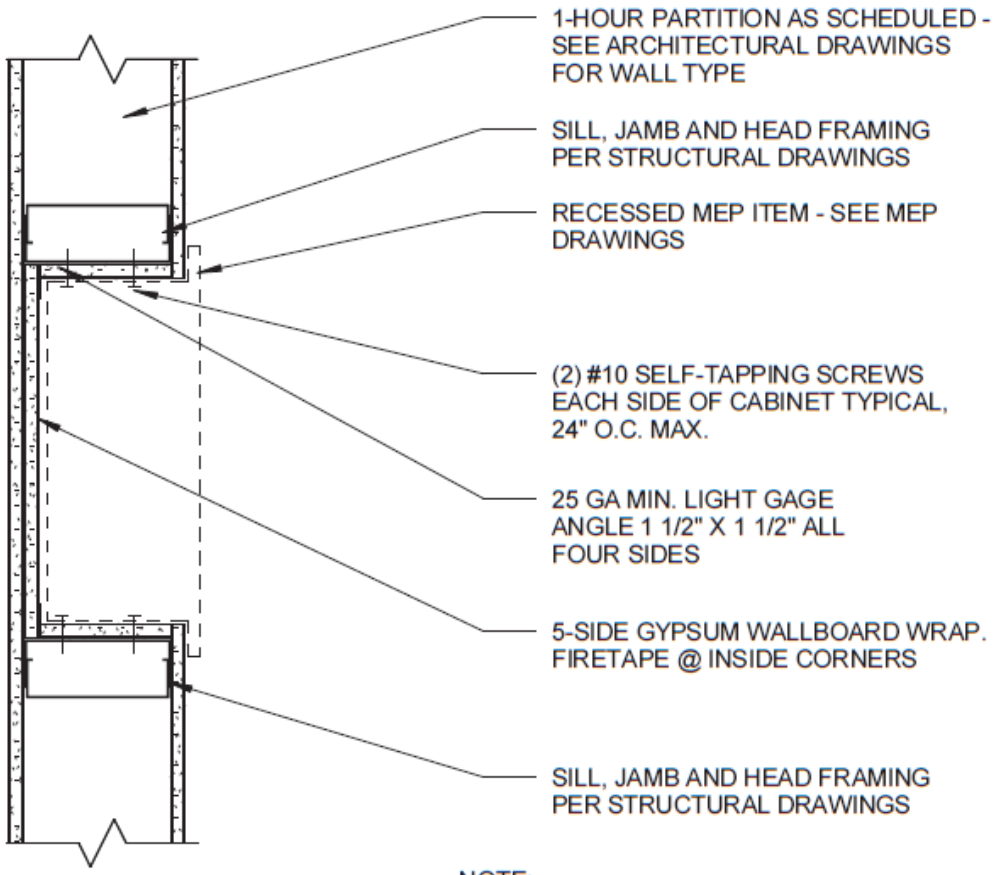

NOTE:
ALL PENETRATIONS TO MEET UL LISTING FOR PENETRATIONS.

2. SECTION

Fire-Resistive Details

Detail #2-
Column Wall
Interface

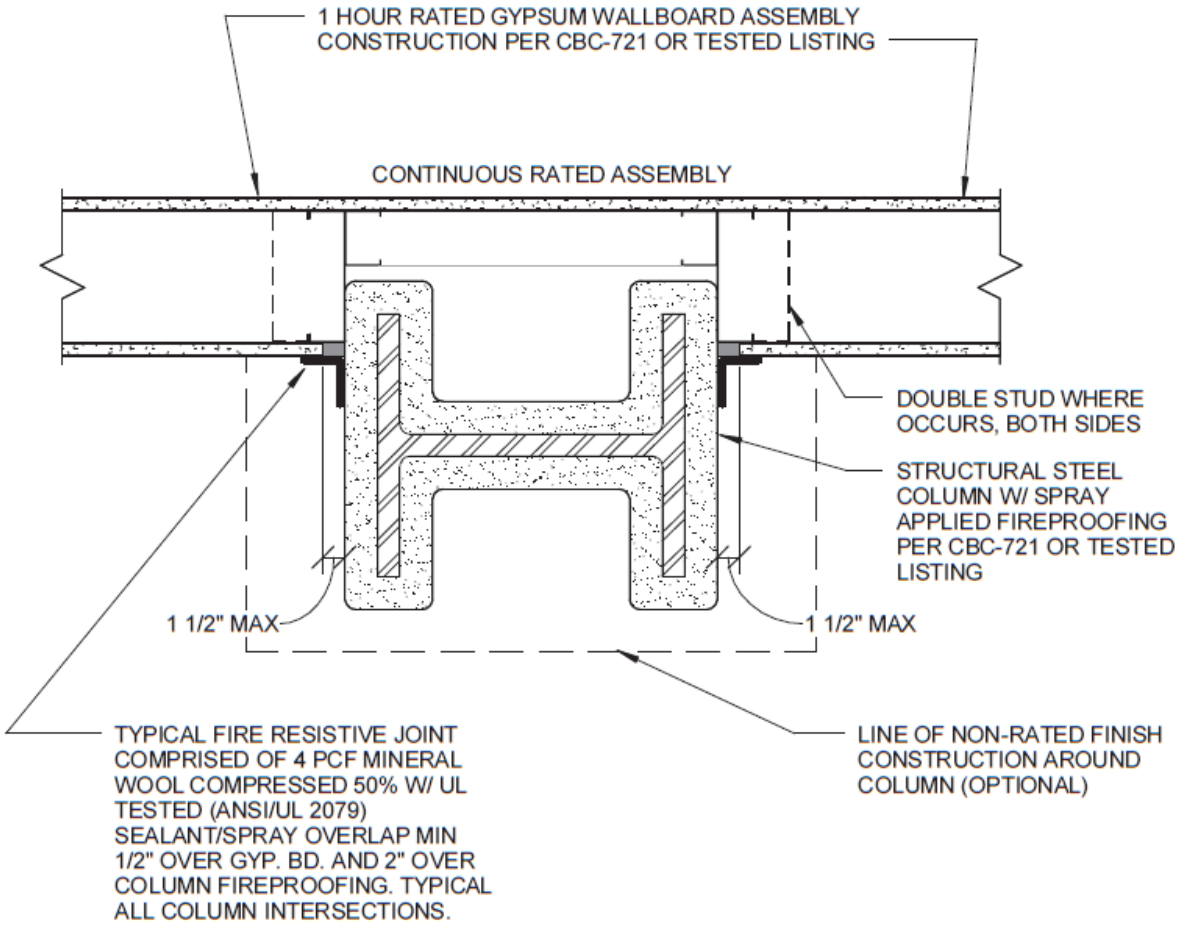

Fire-Resistive Details

Detail #3-
Toilet T Rating

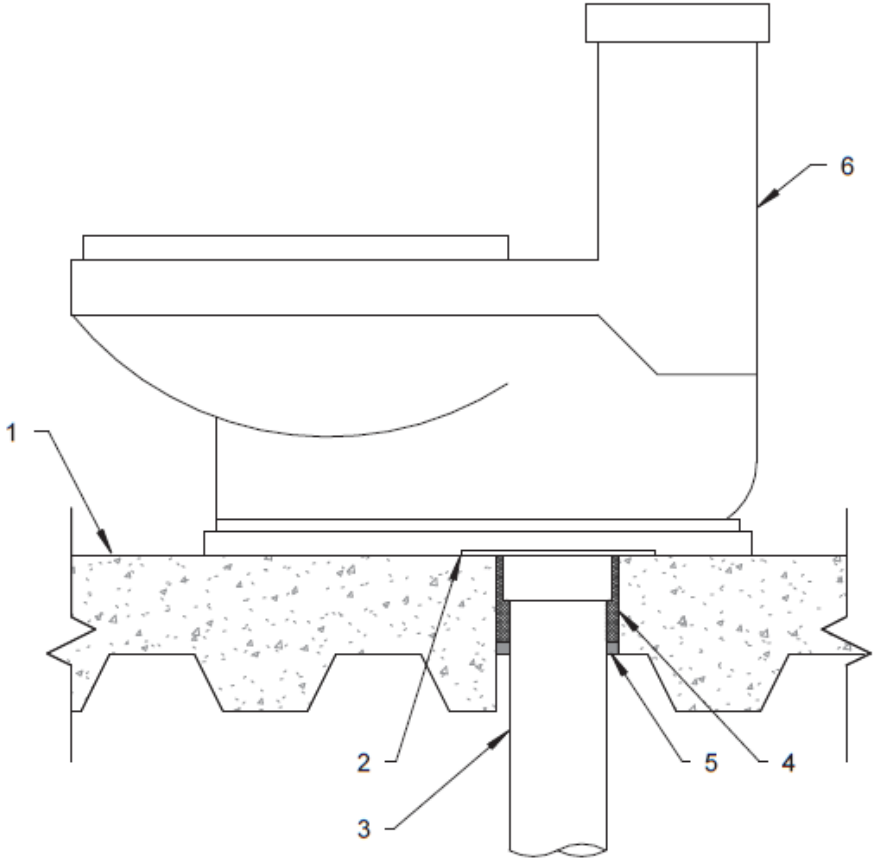

OSHPD
Office of Statewide Health Planning and Development

The Hospital Building Safety Board and the Office of Statewide Health Planning & Development
Facilities Development Division presents:

Hot Topics!

The Seminar

Session #2

Standard Details and Preapproved Certifications
What are OPMs, OSPs, OPDs, and OPLs ?
What are they, how can they can be used in your project?

Facilities Development Division

Topics

1. Nonstructural Components, Supports, and Attachments – Code Requirements

2. OSHPD Preapproval of Manufacturer's Certification (OPM) Program

3. OSHPD Special Seismic Certification Preapproval (OSP) Program

4. OSHPD Preapproved Laboratory (OPL) Program

Nonstructural Components

- Nonstructural **Components, Supports,** and **Attachments** Code Requirements

What are Components, Supports, and Attachments?

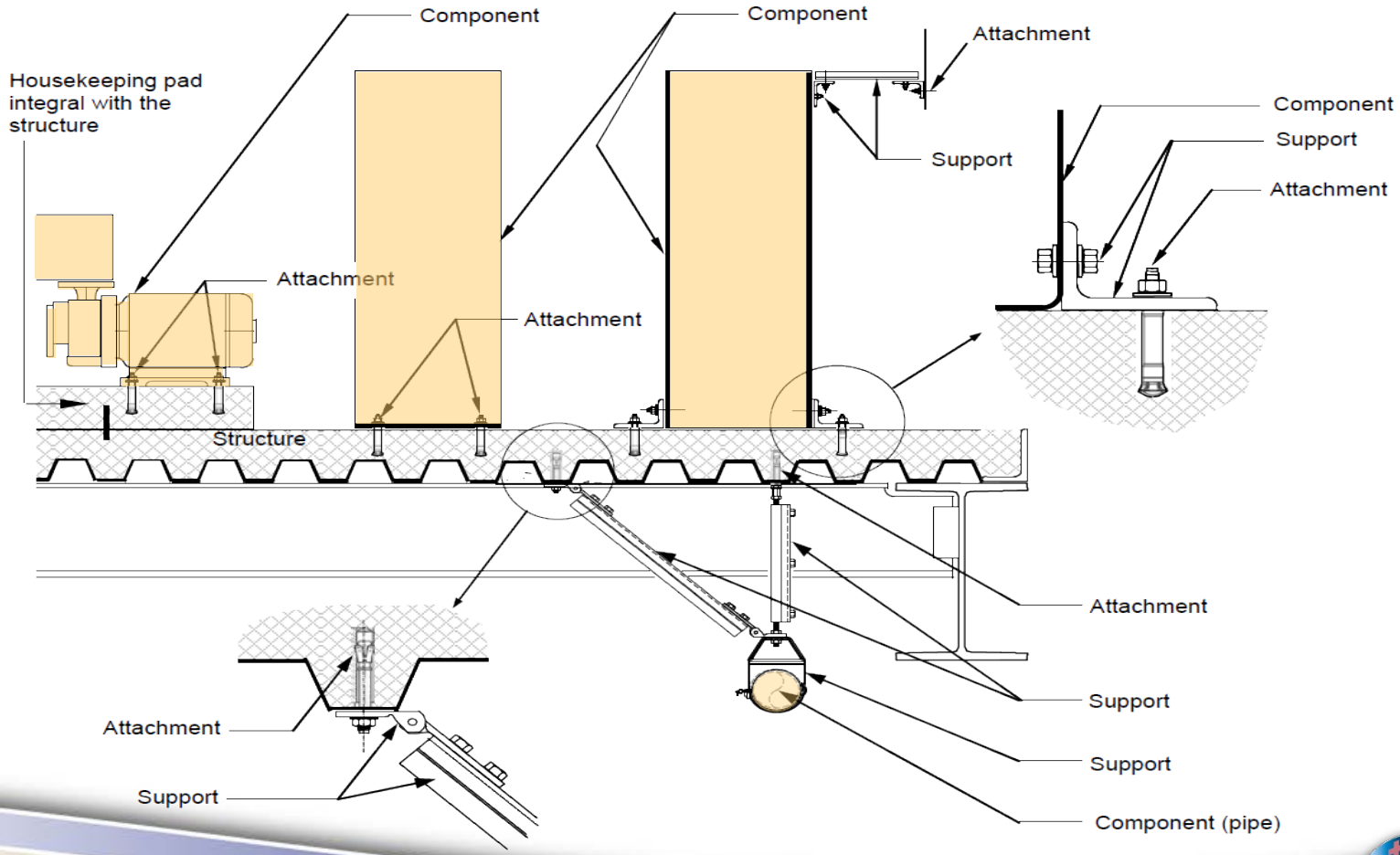

What is a Component?

COMPONENT: A part of an architectural, electrical, or mechanical system (e. g. equipment, component, sub-component, sub-assembly, etc.).

Nonstructural Component: A part of an architectural, mechanical, or electrical system **within or without a building or nonbuilding structure**.

What are Supports?

SUPPORTS: Those members, assemblies of members, or manufactured elements, including braces, frames, legs, lugs, snubbers, hangers, saddles, or struts, and associated fasteners **that transmit loads <u>between nonstructural components and their attachments</u> to the structure.**

What are Attachments?

ATTACHMENTS: Means by which components or supports of nonstructural components are secured or connected to the seismic force-resisting system of the structure. Such **attachments include anchor bolts, welded connections, and mechanical fasteners.**

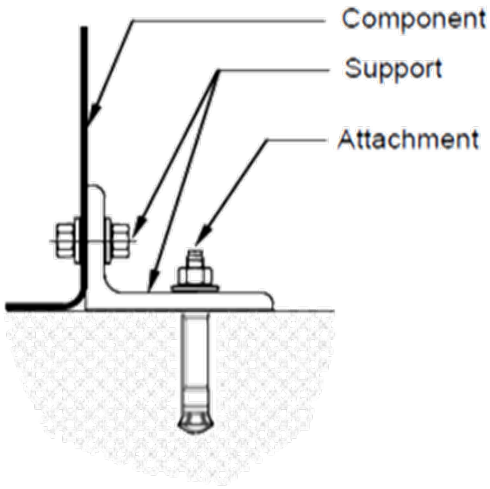

Position Retention vs. Special Seismic Certification

General Seismic Design Requirements for Nonstructural Components ASCE/SEI 7-10 Section 13.2 and CBC 2013 Section 1613A/1616A

Requirements for Position Retention (Design of Supports and Attachments) ASCE/SEI 13.2.1 and CBC 2013 Section 1705A.12.3

OSHPD Preapproval of Manufacturer's Certification (OPM) Program

Special Seismic Certification of Designated Seismic System ASCE/SEI 7-10 Section 13.2.2 and CBC 2013 Section 1705A.12.4

OSHPD Special Seismic Certification Preapproval (OSP) Program

OSHPD Preapproval of Manufacturer's Certification

OPM PROGRAM

Position Retention/Manufacturer's Certification

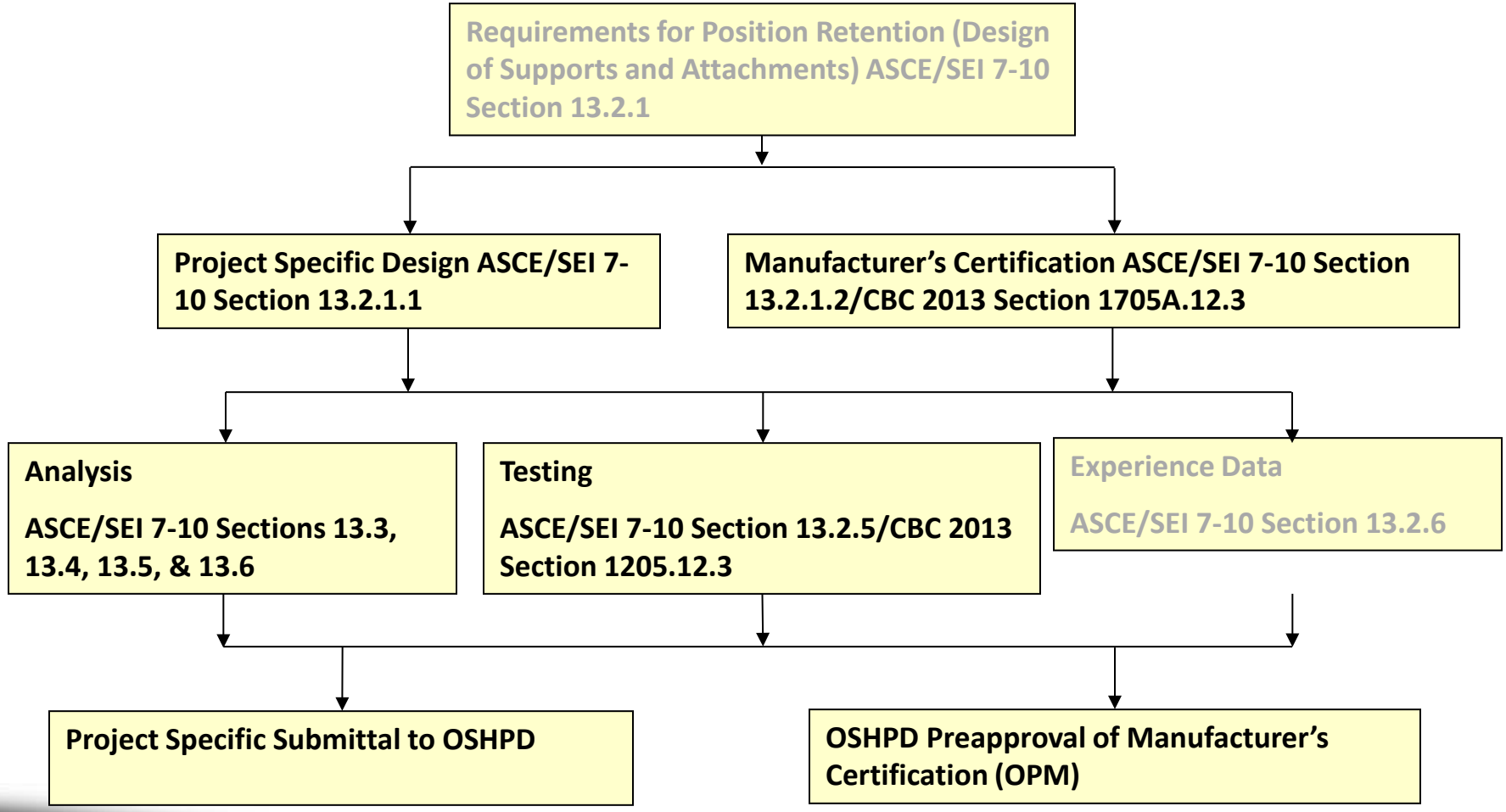

OSHPD Preapproval of Manufacturer's Certification (OPM)

OSHPD **Pre-approval** of Manufacturer's Certification (OPM) is a **voluntary** program.

Scope of OSHPD Preapproval of Manufacturer's Certification (OPM)

- OSHPD Preapproval of Manufacturer's Certification (OPM) is **limited** to:
  1. Seismic design of supports and attachments for nonstructural components,
  2. Seismic bracing of distribution systems,
  3. Interior partition walls and suspended ceilings seismic bracing.

Scope of OPM is limited to Seismic Design ONLY!

- OPM is **NOT** a product/components approval program.
- OPM is **NOT** for Gravity, Wind, Flood, Snow, or other Environmental Forces.
- OPM is limited to Seismic Design for Interior Conditions ONLY.

ASCE 7-10, Section 13.2.1

Requirements for **Architectural, Mechanical, and Electrical Components, Supports, and Attachments** shall be satisfied by one of the following methods:

1. Project specific design and documentation …

2. Submittal of the **manufacturer's certification** that the component is seismically qualified by at least one of the following:

   a. Analysis, or

   b. Testing in accordance with the alternative set forth in Section 13.2.5, or

   c. Experience data in accordance with the alternative set forth in Section 13.2.6.

Typical OPM Scope for Attachments and Supports

- OPM Scope applies to the Entire load path (from Component to Structure).
  1. **Connection between Component & Supports**
  2. **Supports**
  3. **Attachments**
- OSHPD verifies the consistency with Manufacturer's Certified Outline Drawings (COD).
- Most OPMs are based on analysis only.

Piping Stand Attachments and Supports

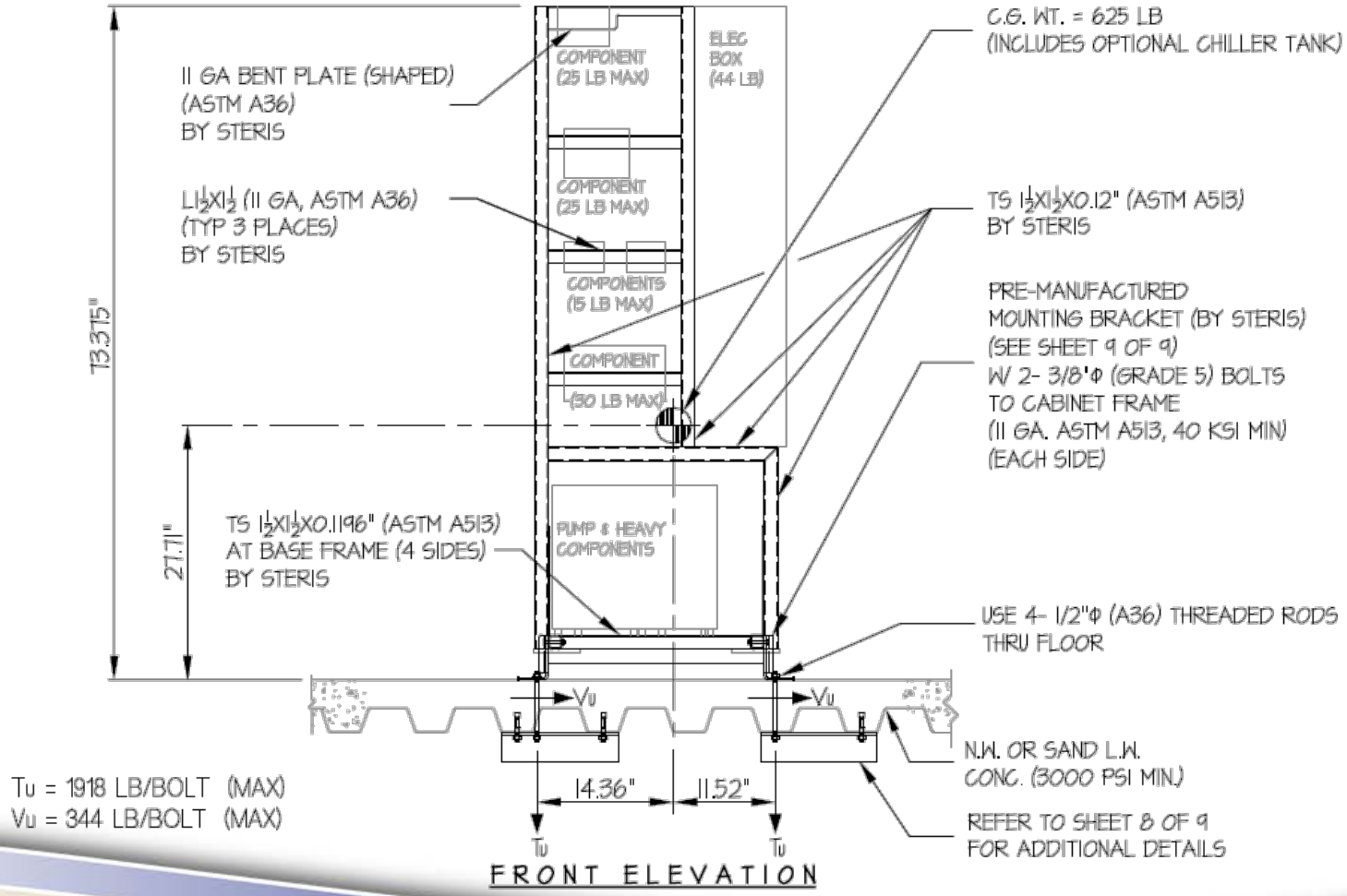

Biosafety Cabinet Supports and Attachments

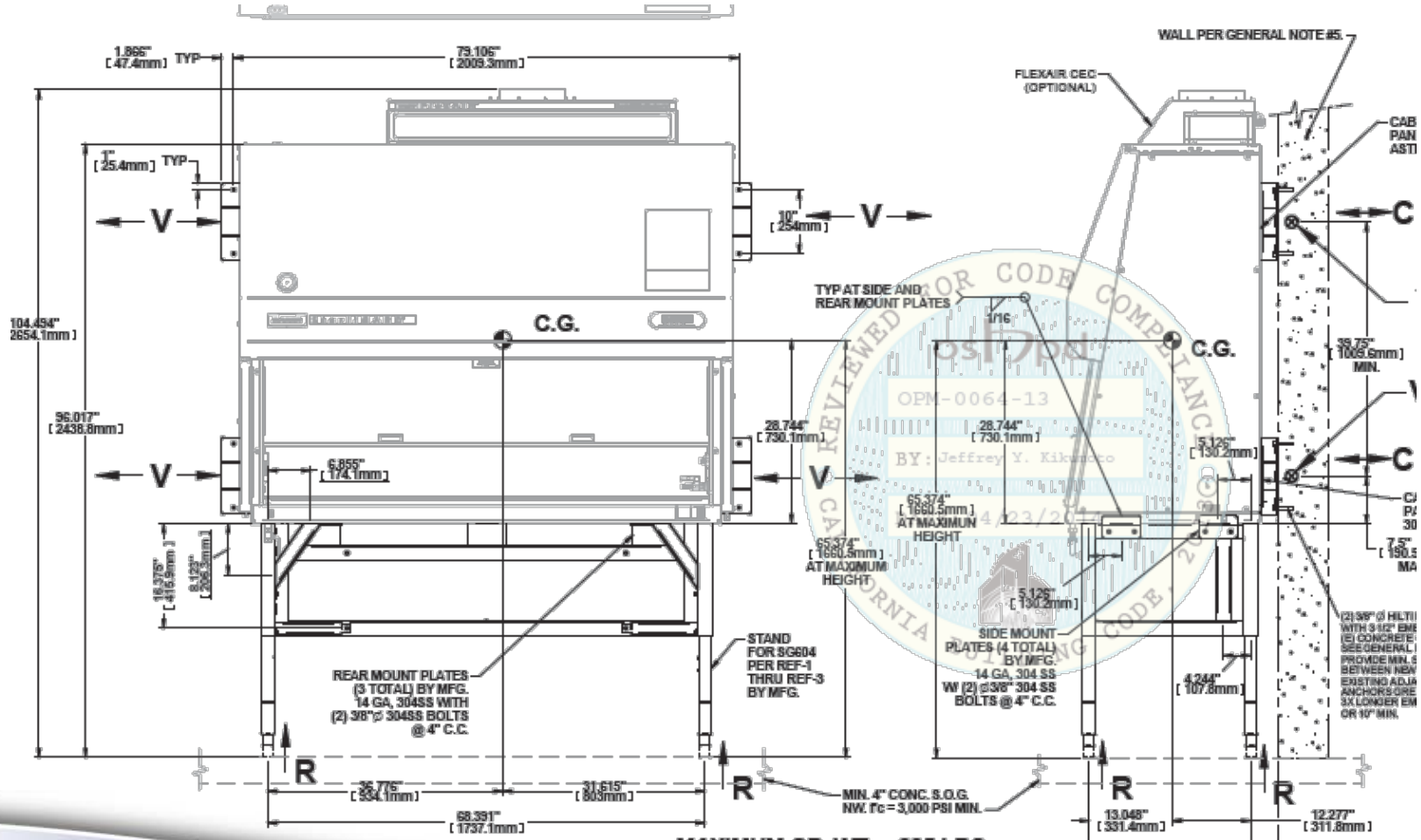

Distribution Systems Bracing and Attachments

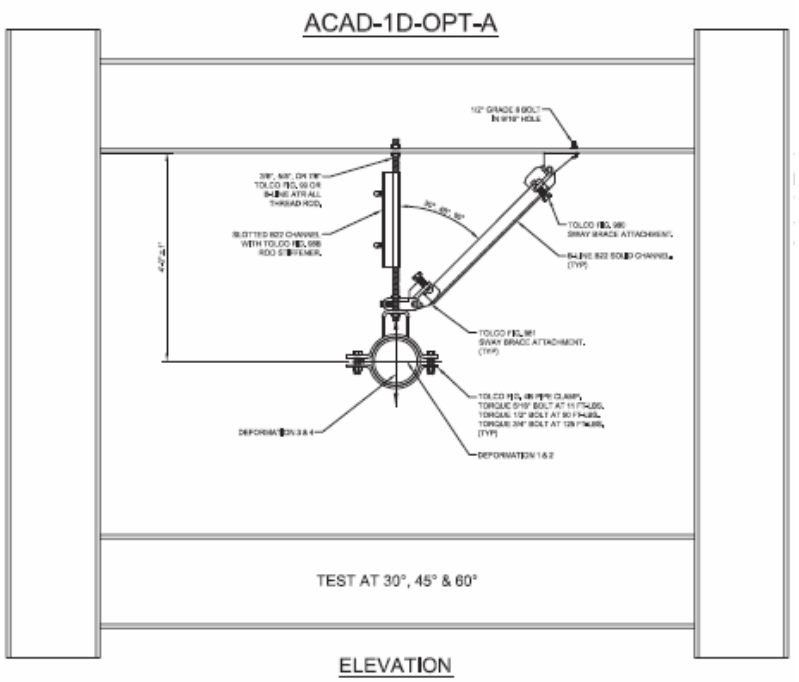

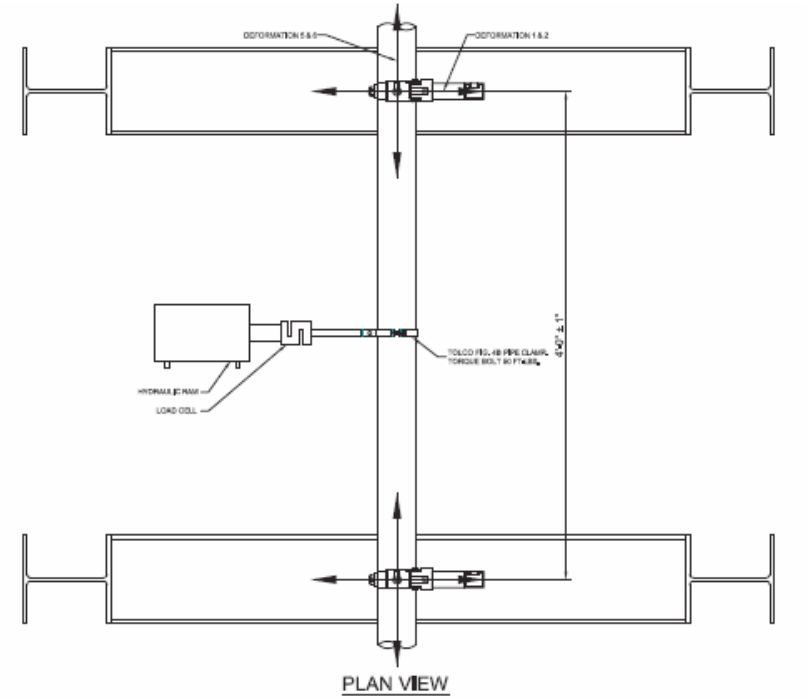

Distribution System Seismic Bracing based on Capacities Established by **Cyclic Tests** in Accordance with FM 1950

OPM Details are at OSHPD Website

- OPM Program details are posted at:

http://www.oshpd.ca.gov/FDD/Pre-Approval/index.html

Pre-Approval Programs

OSHPD Facilities Development Division has three distinct preapproval programs that operate under the Structural Support Unit (SSU).

OSHPD PREAPPROVAL OF MANUFACTURER'S CERTIFICATION (OPM)

The **OSHPD Preapproval of Manufacturer's Certification (OPM)** is a voluntary program for review and preapproval of seismic design of supports and attachments for nonstructural components to be used in health facilities construction in California.

- Application for OSHPD Preapproval of Manufacturer's Certification (OPM)
- OSHPD Preapproval of Manufacturer's Certification (OPM) Triage Check List
- List of OSHPD Preapproval of Manufacturer's Certification (OPM) based on the CBC 2013

OSHPD Special Seismic Certification Preapproval

OSP PROGRAM

CBC 2013 Section 1705A.12.4/ASCE 7-10 Section 13.2.2: Special Seismic Certification

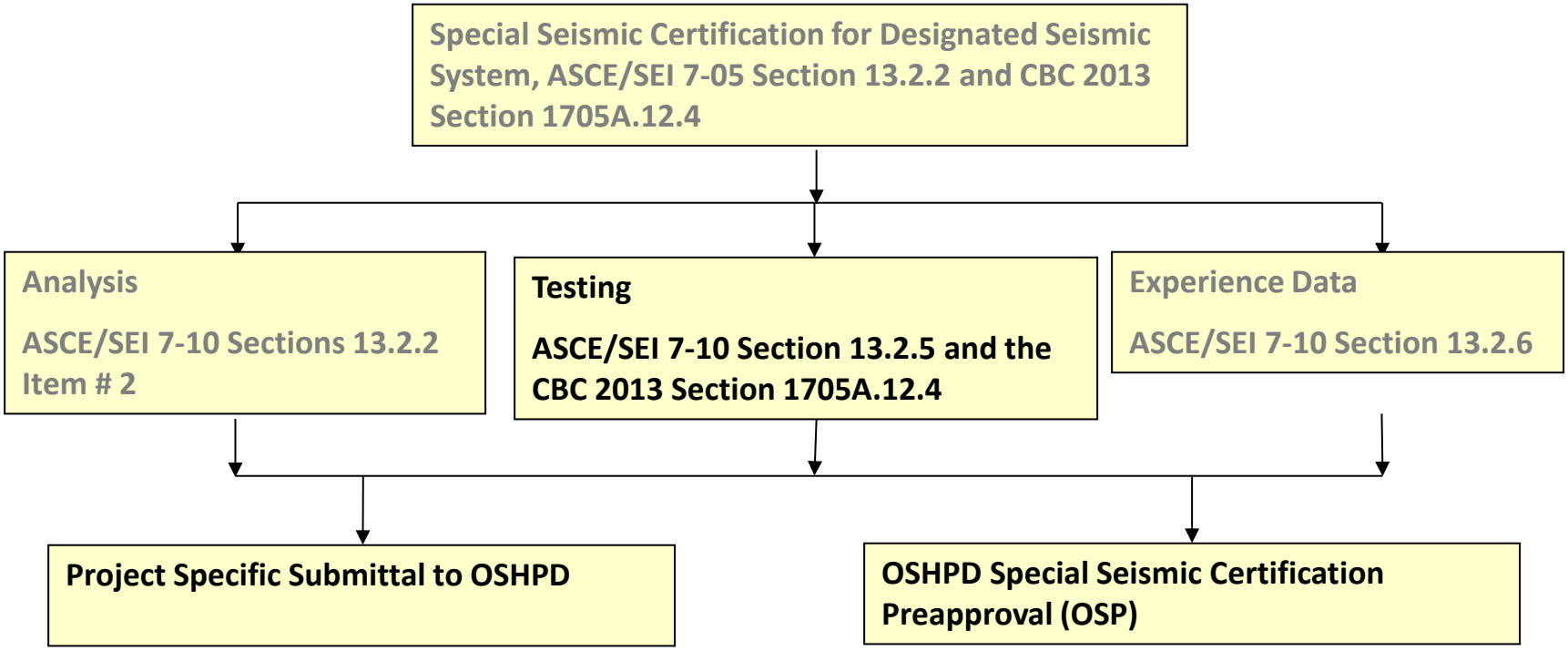

OSHPD Special Seismic Certification Preapproval (OSP)

Preapproval of Special Seismic Certification by OSHPD is a **voluntary** program for Equipment Manufacturers!

What is Special Seismic Certification?

- **<u>"Certificate of Compliance" provided by Manufacturer</u>** with assurances that after a Design Earthquake (DE) Equipment or Component shall maintain:

  1. Structural Integrity, and
  2. Functionality.

Special Seismic Certification Manufacturer's Responsibility

ASCE 7-10 Section 13.2.2:

- The Manufacturer shall submit a **"Certificate of Compliance"**:
  - For review and acceptance by the RDP;
  - For approval by the building official.
- Manufacturer shall provide a label on each Component.

Who Specifies Special Seismic Certification Requirements?

- The **Registered Design Professional (RDP)** shall specify Special Seismic Certification requirements on Construction Documents.
  - Required by the CBC 2013 Section 1705A.12.4.
  - OSHPD shall verify as part of construction documents review.

What does a Special Inspector Need to Verify in the Field for Special Seismic Certification?

The Special Inspector shall verify:

1. ***Label*** *for conformance with the certificate of compliance.*

2. **Anchorage and mounting** for *conformance with the certificate of compliance and* ***construction documents****.*

IBC 1703A.5.3 Label information

- The label shall contain the manufacturer's or distributor's identification, model number, serial number or definitive information describing the product or material's performance characteristics and approved agency's identification.

Sample Certificate of Compliance and Label for Components with OSPs to Satisfy the CBC

Certificate of Compliance
Seismic Certification Label
California Building Code

OSHPD Special Seismic Certification Preapproval: OSP-0XXX-10
Product Name: XXXX
Product Type: XXX
Anchorage: XXXXX
Seismic Performance Characteristics: SDS(g) =x.xx, z/h = 1.0, I_p = 1.5

Manufacturer's Identification Number: XXXXXXXXXXX

Company Logo Label Tracking Number (IF any)

IBC 1703A.5.4 Method of labeling

- Information required to be permanently identified on the product shall be acid etched, sand blasted, ceramic fired, laser etched, embossed or of a type that, once applied, cannot be removed without being destroyed.

Typical OSP Labels

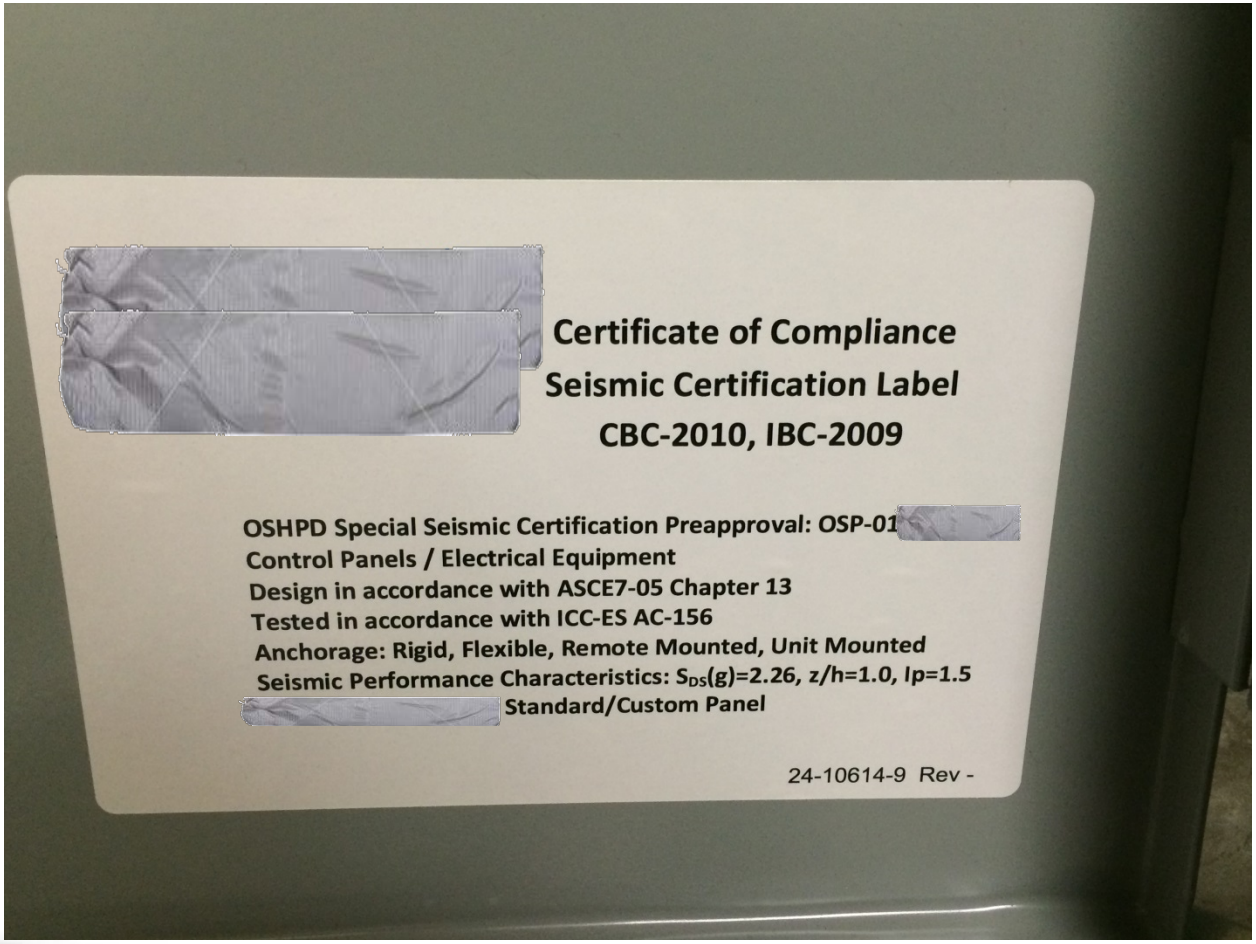

Typical OSP Labels

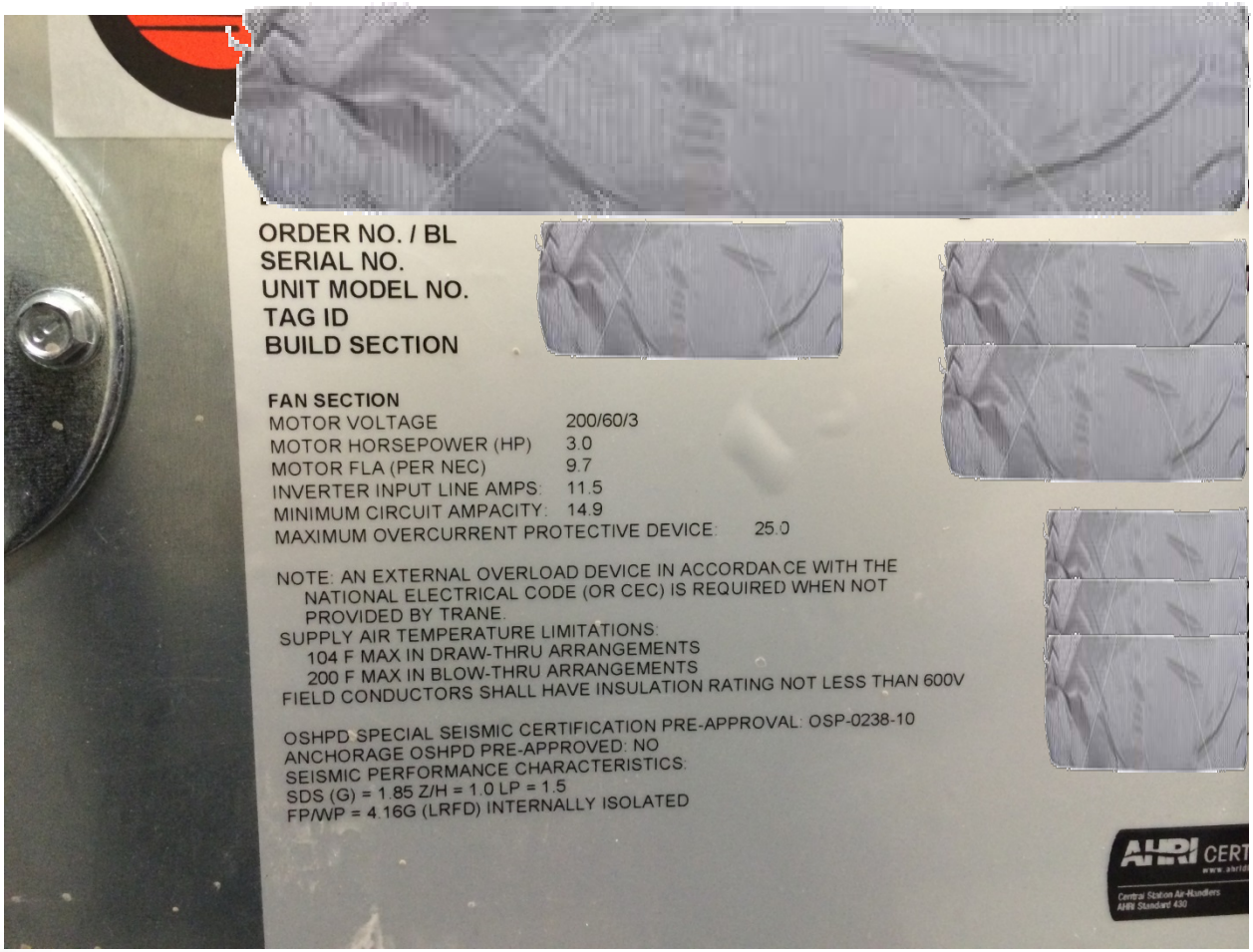

Seismic Certification by Testing

Acceptance Criteria for Special Seismic Certification after Shake Table Test

- Component/Equipment shall:
  - ✓ Retain Position
  - ✓ Not be Life-Safety hazard
  - ✓ Maintain structural integrity of component force resisting system
  - ✓ Maintain functionality equivalent to pre-test functionality.

OSP Info on the OSHPD Web Site

- **OSHPD website shows current OSP list at:**
  - http://www.oshpd.ca.gov/FDD/Pre-Approval/index.html
  - http://www.oshpd.ca.gov/FDD/Pre-Approval/special_seismic_cert_pre-approval.html
  - http://www.oshpd.ca.gov/FDD/Pre-Approval/OSP-List-by-Category.pdf

OSHPD SPECIAL SEISMIC CERTIFICATION PREAPPROVAL (OSP)

The **OSHPD Special Seismic Certification Preapproval (OSP)** is a voluntary program for review and preapproval of Special Seismic Certifications to be used in health facilities construction in California.

- PIN 55: OSHPD Special Seismic Certification Preapproval (OSP)
- Application for OSHPD Special Seismic Certification Preapproval (OSP)
- List of Equipment / Components with OSHPD Special Seismic Certification Preapproval (OSP)
  - OSHPD Special Seismic Certification Preapproval (OSP) by Category

OSHPD Preapproved Laboratory

OPL PROGRAM

The Foundation Pillars for Achieving the Higher Levels of Performance for Hospitals

Higher standards and codes alone are not sufficient

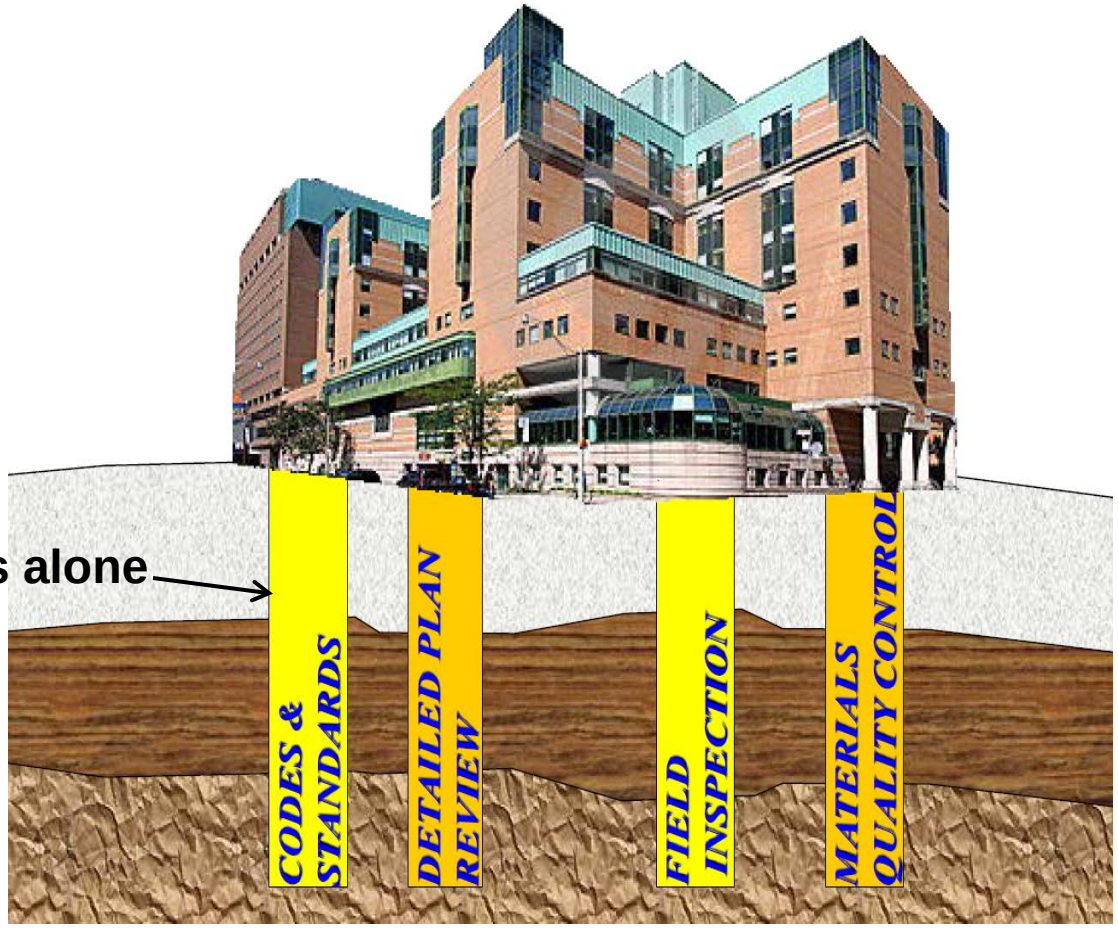

CBC Requirements

- 2013 CBC Section 1703A.4 requires:
  - Test reports based on tests conducted by **approved testing agency**(ies) in accordance with **appropriate reference standards** be provided for the building official to determine that construction materials meet the applicable code requirements.

Tests Requiring Approval

CBC requires three types of structural testing:

1. Tests by manufacturer to determine design capacity (seismic certification of equipment, trial batches for concrete mix design, etc.);
2. Tests by manufacturer to establish/verify materials properties (mill certificates); and
3. Tests by owner's lab to verify material properties (concrete cylinders, rebar, etc.)

Civil Engineering

THE MAGAZINE OF THE AMERICAN SOCIETY OF CIVIL ENGINEERS

NYC Concrete

By Kevin Wilcox

"Testing Lab is accused of submitting thousands of fraudulent test reports, skipping safety tests, and creating false reports to offer the impression that tests were performed. The allegedly false reports span more than 10 years."

OSHPD Preapproved Laboratory (OPL)

OSHPD Preapproved Laboratory (OPL) is a **Voluntary** Program to Approve Testing Agency/Laboratory for Structural Tests.

Scope of OSHPD Preapproved Laboratory (OPM) Program

- OSHPD Preapproved Laboratory (OPL) Program is Limited to:
  - Laboratories Accredited to ISO 17025 or Equivalent,
  - Laboratories Approved under the California Division of State Architect (DSA) Laboratory Evaluation and Acceptance (LEA) Program.

Basis of OSHPD Preapproved Laboratory (OPL)

- OSHPD Preapproved Laboratory (OPL) Program is based on PIN 58:
  http://oshpd.ca.gov/FDD/Regulations/PINs/58.pdf

Facilities Development Division
Office of Statewide Health Planning and Development
400 R Street, Suite 200 • Sacramento, CA 95811 • (916) 440-8300
700 N. Alameda Street, Suite 2-500 • Los Angeles, CA 90012 • (213) 897-0166

POLICY INTENT NOTICE (PIN)

SUBJECT

Approved Testing Agency/Laboratory for Structural Tests

PIN: 58

Effective: 7/20/2014

PURPOSE

2013 California Building Code (CBC) Section 1703A.4 requires that test reports based on tests conducted by **approved testing agency** (ies) in accordance with **appropriate reference standards** be provided for the building official to determine that construction materials meet the applicable code requirements. CBC Chapter 35 adopts International

Scope of PIN 58

- Applies to *structural* testing only (not special inspection).
- It addresses “construction material testing” by the owner’s test lab during construction as well as “design justification” testing done by the manufacturer’s test lab prior to construction.

Scope of PIN 58

- All tests shall be done in accordance with applicable standards.
  - PIN 58 establishes requirements for the test lab.
    - As an alternative, a CA licensed engineer may supervise testing and sign reports (except for foreign labs).
  - All test reports shall be reviewed and accepted by SEOR or named delegate or alternate

Why OPL (CBC Requirements)?

- Test shall be conducted by an **approved testing agency** (Section 1703A.4)
- An **approved** testing agency shall be **Competent** (Section 1701A.1.1)
- Approved Agency is an established and recognized agency **approved by the Building Official** (Section 202)

US Test Facility Requirements
(CBC 2013 Section 1705A.12.4)

- **Testing Laboratory shall have ISO 17025 Accreditation**,

or

- Testing shall be under the Responsible Charge of an Independent California Licensed Engineer.

Why Accept Tests Under the Responsible Charge of an RDP?

- Most University and Manufacturer's Labs are not Accredited
  - However they are Qualified.
- Field Tests are Usually Not in the Scope Labs Accreditation:
  - Steel Non-Destructive Tests
  - Pile Tests
  - Anchor Bolt Tests
  - Material Tests for Seismic Evaluation

Test Report Requirements
(CBC 2013 Section 1705A.12.4)

- Test Reports shall be **Reviewed and Accepted by an Independent California Licensed Structural Engineer**

- OSHPD Updated Testing, Inspection, and Observation (TIO) Form and Verified Compliance Report Form **to Align** with Approved Laboratory Requirements

Can non-US Labs Obtain an OPL?

- **Yes!**
  - Provided Test facility has ISO 17025 accreditation.
  - Test reports shall be available in English.
  - Test reports shall be prepared under the responsible charge of a California Licensed Structural Engineer.

Minimum Requirements for an OPL

- Accreditation in Accordance with ISO 17025 or Equivalent,

and/or

- DSA-LEA Approval.

Acceptable Accreditation Standards and Accreditation Bodies

- A Complete List of Acceptable Accreditation Standards Equivalent to ISO 17025 is Provided in PIN 58
- ISO 17025 Requires that Accreditation Bodies be Qualified under ISO 17011
- A List of Acceptable Accreditation Bodies is Provided in PIN 58.

OPL Program is Accessible & Transparent!

- A Complete List of Approved OPLs are at:
  - http://www.oshpd.ca.gov/FDD/Pre-Approval/preapprovedLaboratory-dtaTable.html
- OPL Flyer is at:
  - http://www.oshpd.ca.gov/FDD/Pre-Approval/OSHPD-PreapprovedLaboratory(OPL).pdf
- OPL Application and Additional Information are at:
  - http://www.oshpd.ca.gov/FDD/Pre-Approval/index.html

Is the OPL Program Limited to Structural Tests Only?

- **Yes!**
  - Non Structural Tests shall be Addressed in Future.

Are the Mill Certs still Acceptable, where Specifically Permitted by CBSC?

- **Yes!**
  - OPL program focuses on **Quality Assurance Testing** Provided by the Owners and **Qualification Testing** by the Manufacturers
  - Quality Control Tests, such as Mill Certs, where **specifically permitted** by the Code are Not Regulated through the OPL Program.

Are the Special Inspection Agencies Approved through OPL Program?

- **No!**
  - Special Inspection Agency Approval shall be Addressed in Future.
  - ISO 17020 is the Acceptable Standard for Inspection Agency Approval & NOT ISO 17025.

OPL Submittal Requirements

1. Completed **application in word format with signature attached**.
2. Application or Renewal filing fee.
   - For credit card, use payment form at webpage below:

   http://oshpd.ca.gov/FDD/Forms/eSPForms/OSH-AD_367%20Facilities%20Development%20Division%20Payment%20Form.pdf
3. Supporting documents to verify accreditation or DSA-LEA approval (see application for details).
4. All documents shall be **submitted electronically to OPL@ OSHPD.CA.GOV**.

Major Benefits of Preapproval Programs

1. May be Used on OSHPD Projects without Plan Review for Approved Scope.
2. Standardizing Design and Construction for the Industry.
3. Greatly Improving Post-Earthquake Performance of Equipment.
4. Reducing Design & Construction Cost.
5. Reducing Plan Review Time & Improving Overall Project Schedule.

The Hospital Building Safety Board and the Office of Statewide Health Planning & Development Facilities Development Division presents:

Hot Topics! The Seminar

Session #1:

Functional Program and Materially Alter

- Learn more about OSHPD's Functional Program requirement. Presenters will review PIN 57 and answer your questions!
- Are you having difficulty determining what changes are considered to materially alter the scope of your project? Presenters will review CAN 2-107.4, and give examples of what does and what does not materially alter your project!

Session #2:

Standard Details and Preapproved Certifications

Are you curious about what OPMs, OSPs, OPDs, and OPLs are? Do you already know what they are but have questions about how they can be used in your project? Come listen to OSHPD experts and HBSB's Standard Details Committee members as they explain and answer your questions!

Session #3:

The Electronic Services Portal (eSP)— Gateway to OSHPD Services

OSHPD Expert, Gary Dunger, will walk you through the eSP's project tracking capabilities, recent upgrades and enhancements, and the new Citizen Access component.

Session #4:

OSHPD Developing Processes; CANs & PINs; Building Code Highlights; Checklists

FDD Deputy Director, Paul Coleman, and other OSHPD experts will discuss new processes which have recently been employed, plus what's in the works. Participate in a live demonstration of the new technology being utilized to streamline the plan review process!

Facilities Development Division (FDD)

Facilities Development Division (FDD) is the Building Department for California's Hospitals

FDD

Seven areas of FDD responsibility:

- Develop Building Standards for hospitals, skilled nursing, clinics, and Correctional Treatment Centers
- Plan review and approval of hospital and skilled nursing construction projects
- Building permit and construction observation of hospital and skilled nursing construction projects
- Hospital Seismic Retrofit Program (SB 1953)
- Hospital Building Safety Board (Advisory and Appeals Board)
- Emergency response after an earthquake or other disaster
- Research: earthquake engineering; new & advanced technologies; computer analyses

FDD

6 Geographical Regions

Sacramento Office

- Central Region
- Coastal Region
- North Region

Los Angeles Office

- North Los Angeles Region
- South Los Angeles Region
- South Region

http://oshpd.ca.gov/FDD/Plan_Review/maps/AllRegions.pdf

Higher Performance Required

Higher Standards for Performance of Hospital Buildings in California

- Commercial buildings may not be repairable or functional following a catastrophe (fire,
  earthquake, etc.)
- Hospitals must function following an incident
- Health philosophy:
  - Ventilation systems must provide comfortable healing environment
  - Does not facilitate the spread of contagious diseases
  - Does not adversely affect immune suppressed patients
- Earthquake philosophy:
  - Hospitals must be reasonably capable of providing services to the public
  - Limited damage
  - Critical equipment and systems remain operational
  - Requires hospitals to be built 1 ½ times stronger than most other buildings
- Fire philosophy:
  - Patients may be too ill to evacuate
  - "Defend in Place" by moving patients to adjacent "compartments"

Higher Performance Required

- **Sustained Operations philosophy:**
  - Adequate sanitation
  - Adequate lighting
  - Emergency power systems
  - Medical Gas Systems

- **Achieving this high performance in hospital construction requires:**
  - Comprehensive building codes that are more complex
  - Thorough plan review requires more time than for other types of buildings
    - FDD has California licensed Architects, Structural Engineers, Mechanical Engineers, and Electrical Engineers and Fire Marshals which review hospital construction drawings
  - Continuous construction inspection and quality assurance which is more demanding on contractors and inspectors

Higher Performance Required

Why is hospital safety important?

- Safety of patients and staff
- Evacuation of seriously ill patients can be fatal
- Patients may be exposed to additional risks due to the time needed to evacuate them
- Hospitals are needed to provide medical assistance to disaster victims
- Hospitals serve as a beacon of life and hope for a community following a catastrophic event
- Important to protect taxpayer, community, and investor dollars
- Replacing a hospital building after it is destroyed can take a decade or longer
- Prolonged earthquake recovery inhibits an area's long-term economic & social renewal, as well as its healthcare access

Higher Performance Required

2103 CBSC w/o Reference Documents

Today the building codes are much more complex than ever, and include both performance and prescriptive requirements as well as many reference documents.

Higher Performance Required

In addition to the CBSC, FDD has C.A.N.s and P.I.N.s

What is a C.A.N. (Code Application Notice)

- HFSSA § 129851
- Code Application Notice – formal, enforceable interpretation of the California Building Standards Code

What is a P.I.N. (Policy Intent Notice)

- Preliminary/proposed regulations to enact a new statutory requirement or program prior to formal adoption of a building standard or regulation
- Also used to formalize a voluntary program such as OSHPD Seismic Certification program (OSP), Phased Plan Review (PPR), etc.

Building Codes

OSHPD's policy for adoption of building codes, standards, and regulations:

- Adopt national codes, standards, and regulations unless there is an identifiable and justifiable basis for California to have a different building code, standard, or regulation based on the following criteria:
  - Statutory requirement(s)
  - Geological
  - Geographical
  - Climatological
- Involve stakeholders to the extent possible in the development and adoption process(es):
  - Bring proposed building codes, standards, and regulations before a public meeting of the appropriate committee of the HBSB
  - Post proposed building codes, standards, and regulations on its website for public notification and comments
  - Building codes, standards, and regulations will go through the Building Standards Commission's public hearing and adoption process(es)

CAN 1-0 Enforceable Codes

Facilities Development Division
Office of Statewide Health Planning and Development
400 R Street, Suite 200 • Sacramento, CA 95811 • (916) 440-8300
700 N. Alameda Street, Suite 2-500 • Los Angeles, CA 90012 • (213) 897-0166

CODE APPLICATION NOTICE (CAN)
H&S Code §129851

SUBJECT
Enforceable Codes

CAN: 1-0

Effective: 9/05/1989
Revised: 11/05/2013

Enforceable Codes

The following are the enforceable codes for facilities under the authority of the Alfred E. Alquist Hospital Facilities Seismic Safety Act of 1983:

Application means the submission of a Preliminary or Final Application for Plan Review.

Code means the official compilation and publication of the adoptions, amendments and repeal of administrative regulations to *California Code of Regulations, Title 24*, also referred to as the *California Building Standards Code*.

APPLICATION		CODE
All applications submitted on or after January 1, 2014	**2013**	**California Administrative Code (CAC)** Part 1, Title 24, California Code of Regulations (CCR)
	2013	**California Building Code (CBC)** Part 2, Title 24, CCR *Based on the 2012 International Building Code (IBC)*

CAN 2-0 OSHPD Jurisdiction

Facilities Development Division
Office of Statewide Health Planning and Development
400 R Street, Suite 200 • Sacramento, CA 95811 • (916) 440-8300
700 N. Alameda Street, Suite 2-500 • Los Angeles, CA 90012 • (213) 897-0166

CODE APPLICATION NOTICE (CAN)
H&S Code §129851

SUBJECT
OSHPD Jurisdiction
(formerly CAN 1-7-103)

CAN: **2-0**
Effective: **7/15/2013**
Revised: **2/19/2014**

OSHPD is the Building Department for Hospitals

Preempts local jurisdictions from the enforcement of all building standards published in the California Building Standards Code relating to the regulation of:

- hospital buildings
- acute psychiatric hospitals
- skilled nursing facilities, intermediate-care facilities
- under certain circumstances, some clinics as codified in the California Health and Safety Code

CAN 2-0 OSHPD Jurisdiction

OSHPD only preempts the local building official and recognizes the authority of other local agencies that retain their respective jurisdictions.

Planning and Zoning Departments
Local Health Departments
Public Works Departments
Fire and Police Departments
ALL retain the jurisdictional authority with which they are normally charged

Items outside building enclosure subject to OSHPD review:

- Accessibility for Entrances, Exits and Paths of Travel Site Accessibility
  1. Verification may be: Standard OSHPD review and observation
  2. Evidence of review and certification by an independent Certified Access Specialist (CASp) retained by the health facility, for CBC compliance (inspection to be performed by project Inspector of Record)
  3. Evidence of plan review, construction inspection, and approval by the local building authority for CBC compliance.

CAN 2-0 OSHPD Jurisdiction

Items outside building enclosure subject to OSHPD review continued:

- Fire/Life Safety
  1. Fire water piping from the backflow preventer to the building
  2. Proximity of adjacent structures
  3. Fire Apparatus Access Roads
  4. Fire Department Connections
  5. Location of valves, post indicator valves, backflow prevention assemblies and hydrants
  6. Exterior means of egress to public way, including site elements such as slope stabilization, retaining walls, pedestrian bridges and other features that could impact egress, required lighting under emergency power illuminating such egress, etc.
- Utilities
  1. Electrical service from the service point (utility vault, transformer or meter) to the point it enters a building or structure under OSHPD jurisdiction
  2. Essential electrical system (emergency power) including required on-site fuel supply
  3. Water service routing from the service meter to the point it enters a building or structure under OSHPD jurisdiction
  4. Utilities from a central plant, or mechanical yard, to any building under OSHPD jurisdiction.

     Note: Grading associated with site drainage related to such utilities remains under local jurisdiction
  5. Wastewater lines from the sewer lateral connection to the point it enters a building or structure under OSHPD jurisdiction

CAN 2-0 OSHPD Jurisdiction

OSHPD requires documentation of the following before issuing a plan approval or a building permit:

- Certification of payment of any School District Fee prior to issuance of a permit (refer to OSHPD PIN 48, *School District Fee Compliance*) for projects that increase the area of an existing building and for all new buildings.
- Local planning/zoning approval, including any conditional use permit and California Environmental Quality Act (CEQA) approvals, for all new buildings and for projects that increase the area of an existing building.
- Any conditions of planning approval and/or more restrictive building standards adopted by the local authority. For example, OSHPD will only enforce equipment screening standards if notified by a local authority's requirements in writing. It is the hospital's responsibility to be aware of, and comply with, all local ordinances and requirements.
- Local authority's review of underground fuel storage tanks (refer to OSHPD PIN 2, *Installation of Underground Fuel Storage Tanks*).
- Local health department approval and approval from the California Department of Public Health, for OSHPD 1 projects that include dietary service.
- Local fire authority acceptance of any Alternate Method of Protection.

CAN 2-108 Temporary Stuff

108.1 General. The *building official* is authorized to issue a *permit* for temporary structures and temporary uses. Such *permits* shall be limited as to time of service, but shall not be permitted for more than 180 days. The *building official* is authorized to grant extensions for demonstrated cause.

Utilities and Equipment

- Provides a temporary service to the hospital to allow a unit shutdown, replacement, etc. with 3 levels of criteria:
  - Temporary equipment for a period of less than 24 hours.
  - Temporary equipment for a period of less than 120 hours (one week)
  - Temporary equipment for a period of less than six months
- Any equipment that will be on site greater than six months shall be required to meet the requirements of permanent construction.
- All Temporary Installations for electrical work shall comply with Article 590 of the California Electrical Code.
- Temporary use of gas shall comply with the California Plumbing Code § 1208.
- Temporary heating equipment shall comply with the California Fire Code § 1403.

CAN 2-108 Temporary Stuff

COMPARISON CHART

	Short-Term Temporary Permit 7-day maximum	**Mid-Term Temporary Permit** 30-day maximum	**Long-Term Temporary Permit** 180-day maximum
Temporary Equipment	Short-term temporary use equipment may be mobile (truck mounted w/ blocked tires and guyed corners) or skid mounted and set on the ground or roof.	Mid-term temporary use equipment may be mobile (truck mounted w/ blocked tires and guyed corners) or skid mounted and set on the ground or roof.	Long-term temporary use equipment may be mobile (truck mounted) or set on the ground or roof.
Seismic Design	Seismic design for supports, attachments and special seismic certification are not required.	Seismic design for supports, attachments and special seismic certification are not required.	Temporary equipment shall be anchored and braced in accordance with ASCE 7 Chapter 13; however the calculated F_p may be reduced by 50%. Special Seismic Certification of temporary equipment per CBC Section 1705A.12.4 is not required.
Seismic bracing of temporary piping, conductors and ductwork	Short-term temporary piping, conductors and ductwork do not require seismic bracing.	Mid-term temporary piping, conductors and ductwork do not require seismic bracing.	Long-term temporary piping, conductors and ductwork shall be secured/supported. Seismic design for supports and attachments of long-term temporary piping, conductors and ductwork is not required.
Protective barriers	Barriers shall be provided for pipes, ducts and conductors associated with temporary equipment to protect them from physical damage. Short-term temporary utilities shall not be subjected to vehicular traffic.	Barriers shall be provided for pipes, ducts and conductors associated with temporary equipment to protect them from physical damage. Temporary utility lines subject to vehicular traffic shall be placed in trenches covered with traffic-rated plates. Temporary fuel gas service shall be protected against damage per CPC Section 1207.0.	Barriers shall be provided for pipes, ducts and conductors associated with temporary equipment to protect them from physical damage. Temporary utility lines subject to vehicular traffic shall be placed in trenches with backfill and covered with traffic-rated plates. Temporary fuel gas service shall be protected against damage per CPC Section 1207.0.

CAN 2-102.6 Remodel

Facilities Development Division
Office of Statewide Health Planning and Development
400 R Street, Suite 200 • Sacramento, CA 95811 • (916) 440-8300
700 N. Alameda Street, Suite 2-500 • Los Angeles, CA 90012 • (213) 897-0166

CODE APPLICATION NOTICE (CAN)
H&S Code §129851

SUBJECT

Remodel

(formerly CAN 2-3403A)

CAN: 2-102.6

Effective: 6/19/2008
Revised: 3/3/2014

CODE SECTIONS

Section 102.6
California Building Code (CBC)

Sections 102.1 and 102.3
California Mechanical Code (CMC)

Sections 101.11 and 101.11.3
California Plumbing Code (CPC)

CAN 2-102.6 Remodel

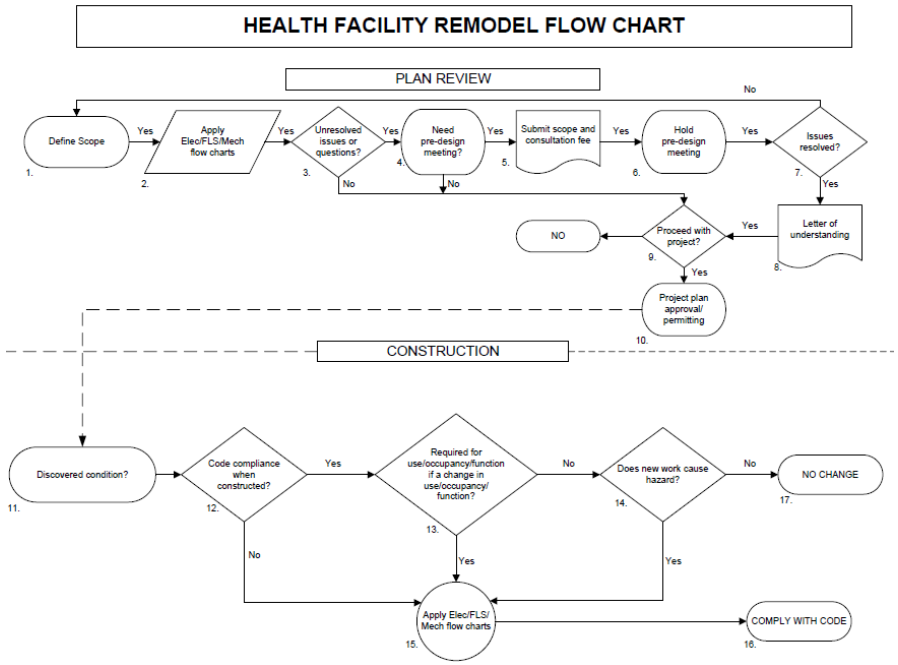

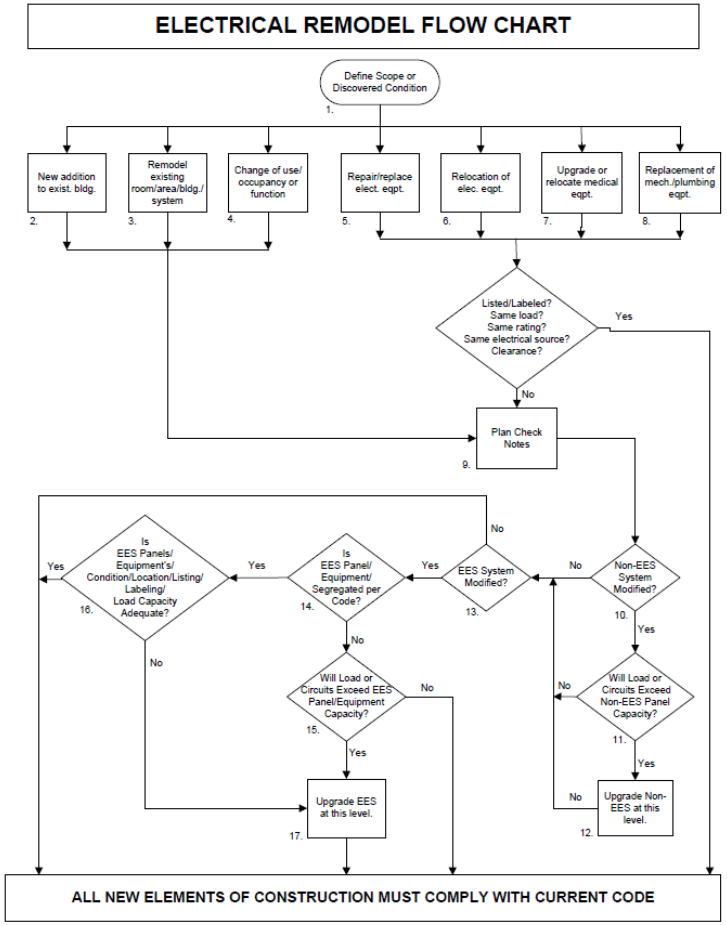

CAN 2-102.6 Remodel

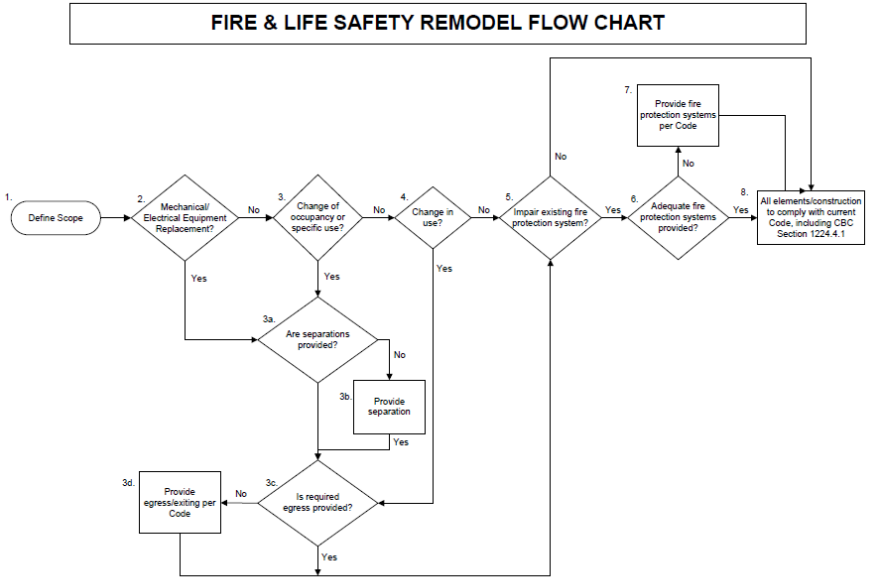

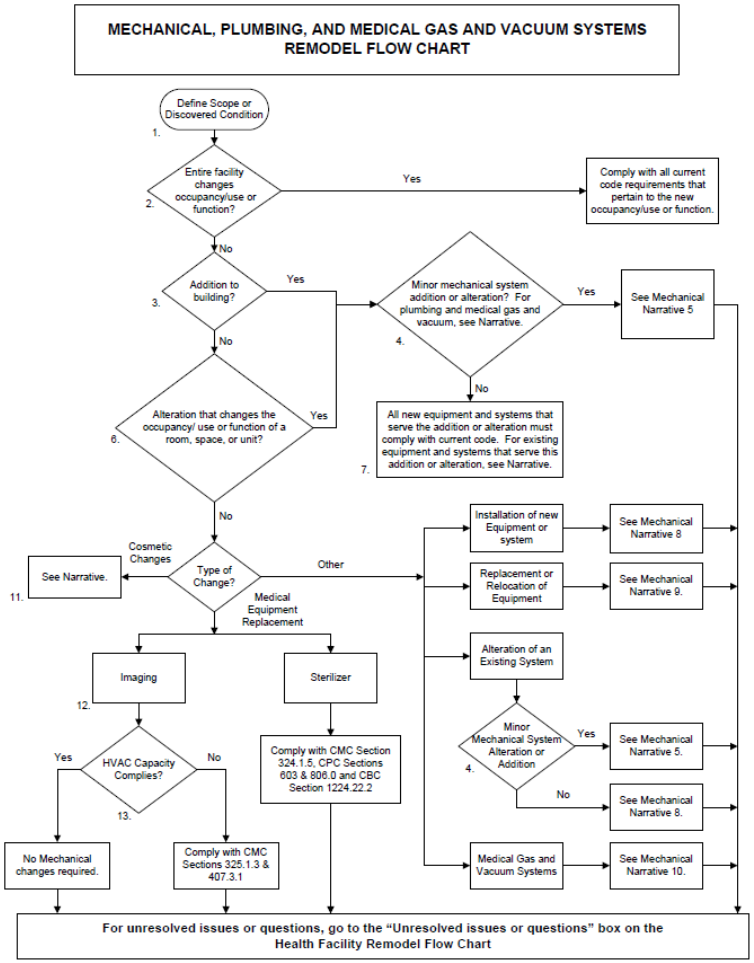

CAN 2- 11B Accessibility

Paradigm Shift

The Glass was **Half Full** but is now **Half Empty**.

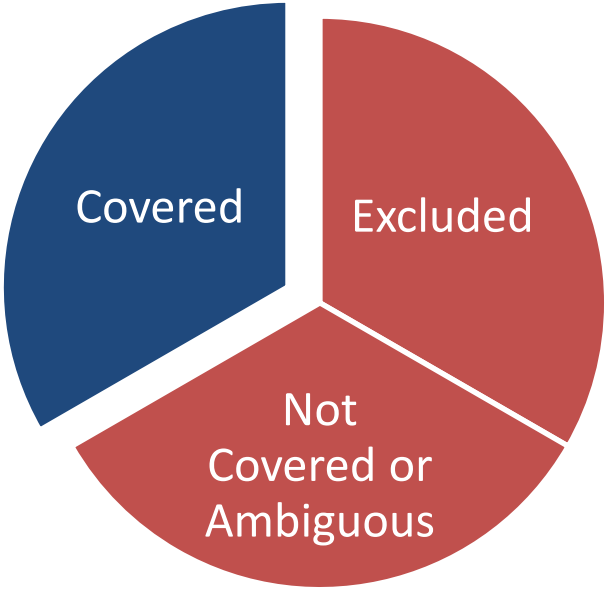

Before
(2010 CBC)

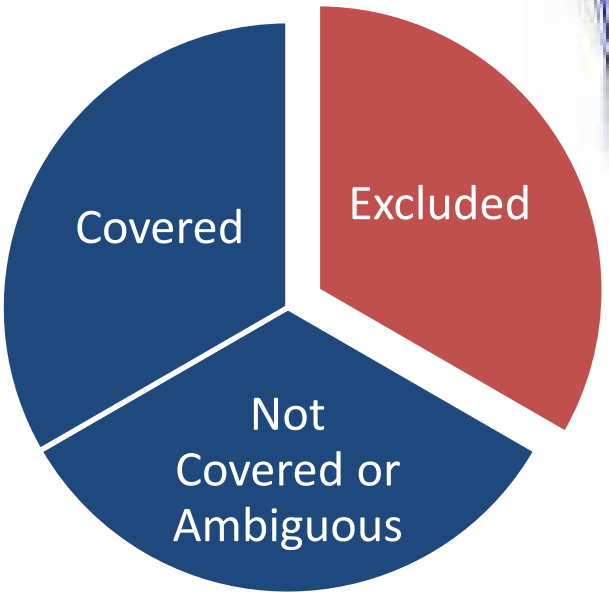

Now
(2013 CBC)

CAN 2- 11B Accessibility

Paradigm Shift

California Accessibility Standards in the **2013 CBC**

"**All** areas of newly designed and newly constructed buildings and facilities, and altered portions of existing buildings, shall comply with these requirements."

General Approach: Everything must be accessible unless specifically noted otherwise. Hard to argue with the term "**ALL**".

"When a site, building, facility, room or space contains more than one use, **each portion** shall comply with the applicable requirements for that use."

Occupancy Groups are no longer used in Chapter 11B. Specific accessibility requirements shall be applied to each and every use in each and every room.

PIN 58

Facilities Development Division
Office of Statewide Health Planning and Development
400 R Street, Suite 200 • Sacramento, CA 95811 • (916) 440-8300
700 N. Alameda Street, Suite 2-500 • Los Angeles, CA 90012 • (213) 897-0166

POLICY INTENT NOTICE (PIN)

SUBJECT

Approved Testing Agency/Laboratory for Structural Tests

PIN: 58

Effective: 7/20/2014

PURPOSE

2013 California Building Code (CBC) Section 1703A.4 requires that test reports based on tests conducted by **approved testing agency** (ies) in accordance with **appropriate reference standards** be provided for the building official to determine that construction materials meet the applicable code requirements. CBC Chapter 35 adopts International Standards Organization (ISO) Accreditation Standard 17025 (ISO 17025) as one of the reference standards for accreditation of the laboratories (labs). Therefore, an Approved Testing Agency is any laboratory (lab) or testing agency (the words lab and testing agency are used interchangeably in this PIN) accredited under the ISO 17025 for specific tests listed in the scope of the accreditation.

PIN 58

http://oshpd.ca.gov/FDD/Pre-Approval/preapprovedLaboratory-dtaTable.html

OSHPD Preapproved Laboratory (OPL) Number	Approved Laboratory Name	City	County	State (Use Country Name for non-US Labs)	ZIP Code	Approval Expiration Date	Comments
OPL-0001-14	Dynamic Certification Laboratories	Sparks	Washoe	Nevada	89431	08/12/2020	See Attachment
OPL-0002-14	CHJ	Colton	San Bernardino	California	92324	02/23/2017	See Attachment
OPL-0003-14	CHJ	Victorville	San Bernardino	California	92392	03/30/2016	See Attachment
OPL-0004-14	Caltech Labs	Brea	Orange	California	92821	03/25/2018	See Attachment
OPL-0005-14	Applied Technical Services	Marietta	Cobb	Georgia	30062	01/31/2016	See Attachment
OPL-0006-14	Consolidated Engineering Laboratories (CEL)	Oakland	Alameda	California	94606	10/16/2015	See Attachment
OPL-0007-14	Construction Testing & Engineering, Inc. (CTE)	Escondido	San Diego	California	92026	In Review	In Review
OPL-0008-14	CTE South, Inc.	Oxnard	Ventura	California	93033	In Review	In Review
OPL-0009-14	CTE South, Inc.	Riverside	Riverside	California	92518	In Review	In Review

PIN 58

ACCREDITATION

This laboratory currently holds accreditation by: *(Attach a copy of current accreditation details.)*

- ☒ AASHTO Accreditation Program (AAP)
- ☐ International Accreditation Service (IAS)
- ☐ Laboratory Accreditation Program (LAB)
- ☐ Other _____
- ☐ National Voluntary Laboratory Accreditation Program (NVLAP)
- ☐ American Association of Laboratories Program (A2LA)
- ☐ Construction Materials Engineering Council (CMEC)

Latest Expiration Date *(if any)* _____

Is this laboratory accepted in the Division of the State Architect Laboratory Evaluation and Acceptance Program, DSA-LEA? ☐ No ☒ Yes Expiration Date: **02-23-2017**

Basis for accreditation:

- ☐ ISO/IEC 17025: General requirements for competence of testing and calibration laboratories
- ☐ NISTIR 7012: Technical requirements for construction materials testing
- ☒ AASHTO R18: Standard Recommended Practice for Establishing and Implementing a Quality System for Construction Materials Testing Laboratories
- ☒ ASTM E 329: Specification for Agencies Engaged in the Testing and/or Inspection of Materials Used in Construction
- ☒ ASTM C 1077: Practice for Laboratories Testing Concrete and Concrete Aggregates for Use in Construction and Criteria for Laboratory Evaluation
- ☒ ASTM D 3666: Specification for Minimum Requirements for Agencies Testing and Inspecting Bituminous Paving Materials
- ☐ ASTM D 3740: Practice for Evaluation of Agencies Engaged in Testing and/or Inspections of Soils and Rock as Used Engineering Design and Construction
- ☒ ASTM C 1093: Practice for Accreditation of Testing Agencies for Unit Masonry
- ☐ ASTM E 1212: Practice for Quality Management Systems for *Nondestructive Testing (NDT)* Agencies
- ☐ ASTM E 543: Specification for Agencies Performing *Nondestructive Testing (NDT)*

PIN 58

STANDARDS

By checking "yes" in Tables 1 through 6 below, the applicant verifies that the laboratory has the equipment and qualified personnel to perform the indicated testing. ***ONLY mark tests that are listed in accreditation certificate or DSA-LEA.***

1	SOIL AND ROCK						
	Tests						
Yes	**Standard**		**Test Procedure**	**Yes**	**Standard**		**Test Procedure**
☒	a.	ASTM D 2487	Classification of Soils	☒	k.	ASTM D 1140	No. 200 Wash
☒	b.	ASTM D 422	Particle Size Analysts	☒	l.	ASTM D 4829	Expansion Index
☒	c.	ASTM D 2216	Moisture Content	☒	m.	ASTM D 2419	Sand Equivalent Value
☒	d.	ASTM D 4318	Liquid / Plastic Limit	☒	n.	ASTM D 1557	Soil Compaction - Modified
☐	e.	ASTM D 2850	Unconsolidated, Undrained Triaxial	☒	o.	ASTM D 3080	Direct Shear
☐	f.	ASTM D 4767	Triaxial Compression	☒	p.	ASTM D 6938	Density of Soils - Nuclear Gage
☒	g.	ASTM D 2166	Unconfined Compressive Strength	☒	q.	ASTM D 1556	Density of Soils - Sand Cone
☐	h.	ASTM D 7012	Triaxial Compressive Strength of Rock Core Specimens	☐	r.	ASTM D 1143	Deep Foundations – Static Compression
				☐	s.	ASTM D 4945	Deep foundations – Dynamic Testing
☐	i.	ASTM D 5778	Friction Cone and Pizocone Penetration Test	☐	t.	ASTM D 3689	Deep Foundations – Axial Tension
				☐	u.	ASTM D 3966	Deep Foundations –Lateral Loads
☐	j.	ASTM D 3441	Cone Penetration Test (CPT)				

Tests that are in the lab's scope but are not listed above should be provided in the space(s) below.

Yes	**Standard**		**Test Procedure**	**Yes**	**Standard**		**Test Procedure**
☐	aa.			☐	dd.		
☐	bb.			☐	ee		
☐	cc.			☐	ff		

2016 CBSC Update

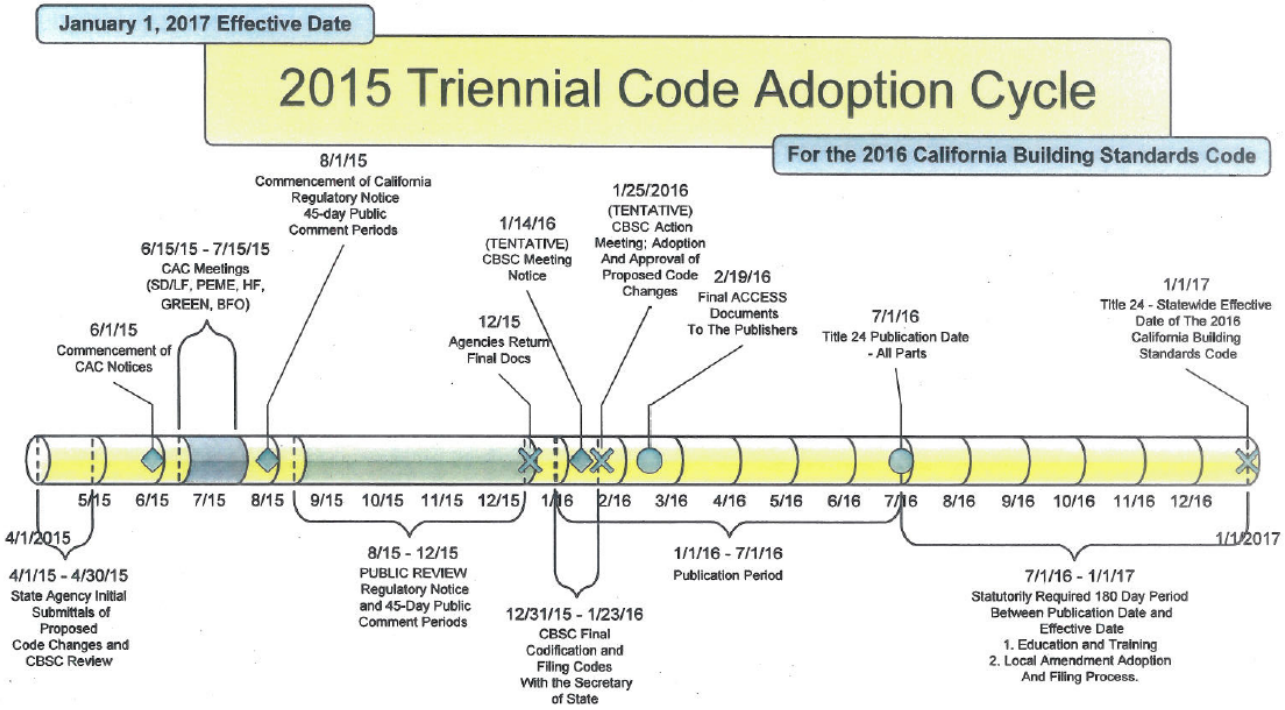

CAC Committees:
SDLF – Structural Design/ Lateral Forces
PEME – Plumbing, Electrical, Mechanical & Energy
HF – Health Facilities
GREEN – Green Building
BFO – Building, Fire & Other
ACCESS – Accessibility

*** All dates are subject to change**

The Future of Building Codes

- A mix of prescriptive and performance-based building standards will continue
- Costly declared emergencies will bring pressure for more existing building retrofits
- Use national standards to extent possible – ICC codes, FGI, etc.
- More economic impact assessments to ensure cost-effective codes and regulations
- Codes, standards, and regulations are subject to CEQA – environmental impact assessment
- New standards will be need to be developed to regulate technology-driven building components and systems
- Incorporation of reference standards will continue
- Incorporation of new materials and construction methods, such as fuel cells, etc.
- More involvement of Legislature in code change and development as a result of Lobbyists
- Less frequent code change cycles

The Future of Building Codes

Keeping the code responsive to current medical practice – OSHPD - FDD - *BSU*

The Future of Building Codes

***"New concepts of design"* reviewed by FDD in plan review**

are acknowledged through regular updates to California Building Code language

The Future of Building Codes

***"The latest medical equipment"* reviewed by FDD in plan review**

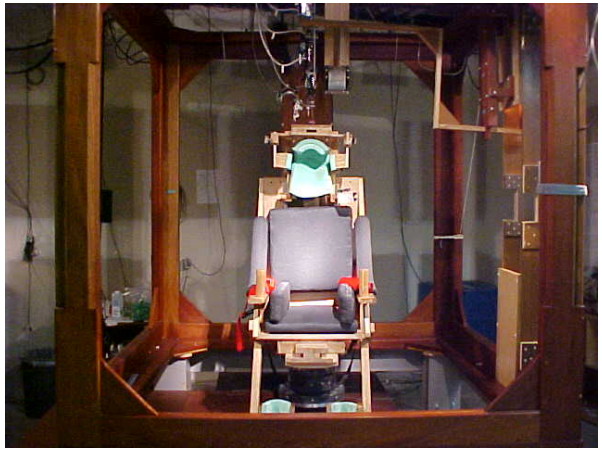

is acknowledged through regular updates to California Building Code language

Information Technology Building Standards?

HBSB Information Technology Committee:

Discuss / establish committee goals for 2014. Some potential goals for discussion:

- Poll vendors to see what new technologies might be developed and potentially used in hospital systems
- Request CISCO systems explain their redundancies on critical hospital systems
- Ensure current code and regulations do not prevent the use of emerging technology in hospital systems
- FDD staff share with the committee what they are seeing in electronic plan review
- Discuss the potential for Fire & Life Safety systems that utilize emerging technology
- Emerging technology for structural systems
- Assist FDD in determining how technology can be used to improve plan review processes
- Request “guest speakers” from hospital IT representatives

Information Technology Building Standards?

Buildings Codes:

Regulated Systems

- Hardened Systems
- Redundant Systems
- Integrated Systems

Unregulated Systems

Design/Review/Construction:

- 3D/BMI
- eSP (Electronic Services Portal)
  - eClient Access
  - eDocument Processing
  - ePermits
  - eProject Tracking
  - eInspection Services
  - eCodes
- Virtual OTCs
- Virtual Plan Review

Planning Today for the Future

What Will The Hospital of the Future Look Like?

Objectives and Opportunities

Objectives and Opportunities:

FDD's Top 3 Objectives for 2014

1. Continue to expand electronic plan review capabilities
2. Continue to expand the standard details, especially those for skilled nursing facilities
3. Continue to develop over-the-counter/computer capabilities and opportunities

FDD's Expansion of IT Solutions

Limitations:
Budget
Procurement Rqmts.
Limited IT Support
Slow Pace of Gov't.
Controls
Security

Possible Solutions:
Partnering
Pilot Programs
R&D by Others
Lower Expectations

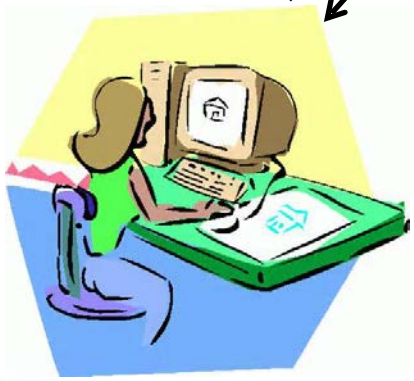

Cloud Issues:
Security
Controls
Reliability
Credibility
Manageability
Survivability
Authenticity
Archives
Ownership

Facilities Development Division

Sutter Pilot Using Blue Beam Program

Objectives and Opportunities

Objectives and Opportunities:

FDD's Top 3 Objectives for 2014

1. Continue to expand electronic plan review capabilities
2. Continue to expand the standard details, especially those for skilled nursing facilities
3. Continue to develop over-the-counter/computer capabilities and opportunities

Standard Details

- 2007 CBC Standard Partition Wall Details
- 2010 CBC Standard Partition Wall Details
- 2010 CBC Standard Suspended Ceiling Details

OSHPD PREAPPROVED DETAILS (OPD) VALID FOR PROJECTS BASED ON THE CALIFORNIA BUILDING STANDARDS CODE, 2013 (CBSC 2013) AND EARLIER CODES*		
OPD Number	Description	Comments
OPD-0001-13 TO OPD-0025-13		
OPD-0001-13	2013 Standard Partition Wall Details	
OPD-0002-13	2013 CBC Standard Suspended Ceiling Details	
OPD-0003-13	2013 CBC Standard Gypsum Board Ceiling Details	
		• *Return to top*

In Progress: Standard Fire Life Safety Details

Standard Details

Facilities Development Division
Office of Statewide Health Planning and Development
400 R Street, Suite 200 • Sacramento, CA 95811 • (916) 440-8300
700 N. Alameda Street, Suite 2-500 • Los Angeles, CA 90012 • (213) 897-0166

POLICY INTENT NOTICE (PIN)

SUBJECT
Use of OSHPD Pre-Approved Details

PIN: 51
Effective: 8/16/2011
Revised: 12/5/2013

Follow PIN 51 to incorporate a preapproved detail during design or during construction

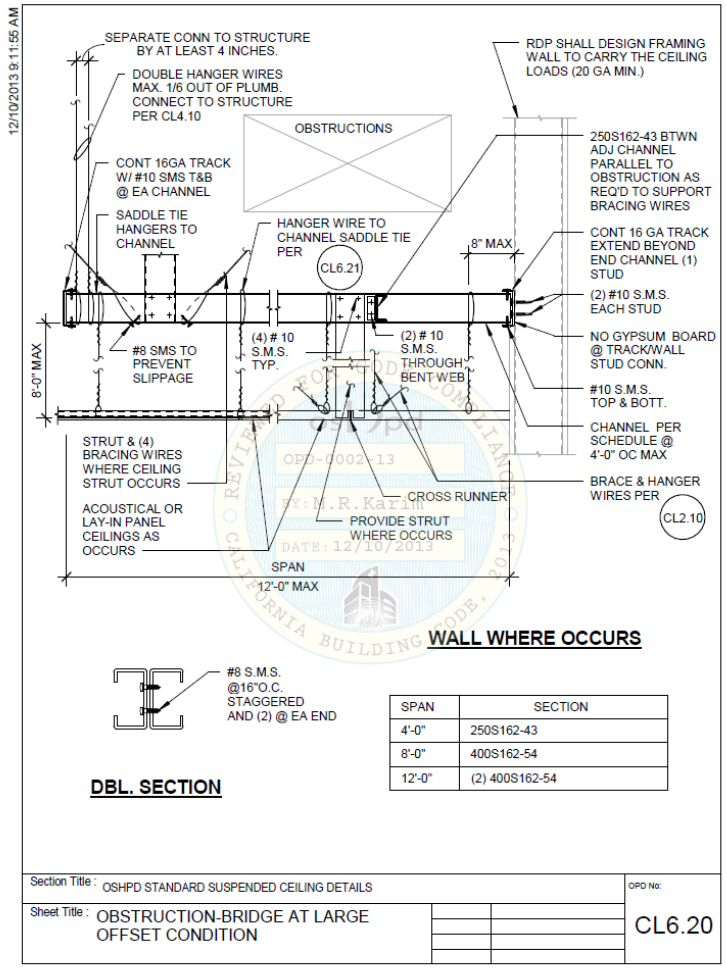

The "How To Guide" Series

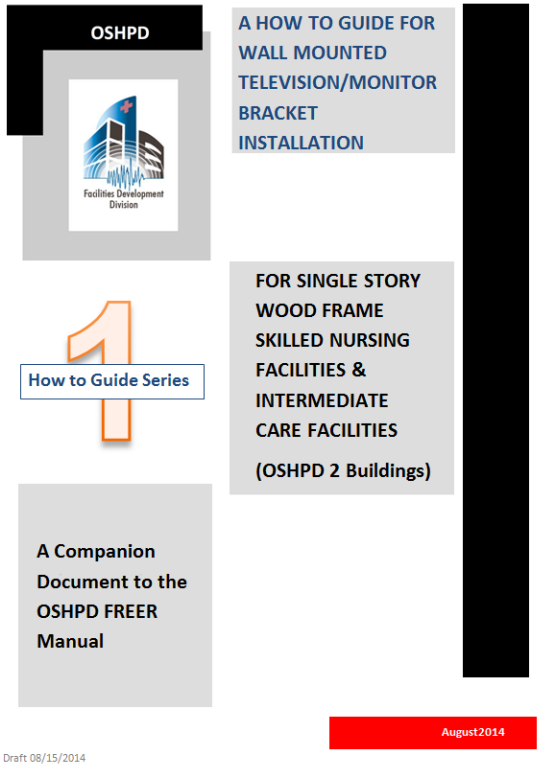

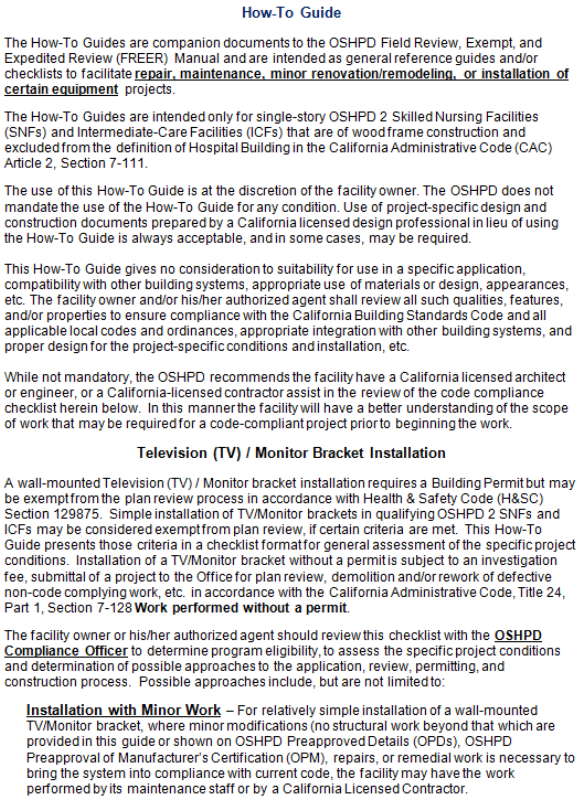

How-To Guide

The How-To Guides are companion documents to the OSHPD Field Review, Exempt, and Expedited Review (FREER) Manual and are intended as general reference guides and/or checklists to facilitate **repair, maintenance, minor renovation/remodeling, or installation of certain equipment** projects.

The How-To Guides are intended only for single-story OSHPD 2 Skilled Nursing Facilities (SNFs) and Intermediate-Care Facilities (ICFs) that are of wood frame construction and excluded from the definition of Hospital Building in the California Administrative Code (CAC) Article 2, Section 7-111.

The use of this How-To Guide is at the discretion of the facility owner. The OSHPD does not mandate the use of the How-To Guide for any condition. Use of project-specific design and construction documents prepared by a California licensed design professional in lieu of using the How-To Guide is always acceptable, and in some cases, may be required.

This How-To Guide gives no consideration to suitability for use in a specific application, compatibility with other building systems, appropriate use of materials or design, appearances, etc. The facility owner and/or his/her authorized agent shall review all such qualities, features, and/or properties to ensure compliance with the California Building Standards Code and all applicable local codes and ordinances, appropriate integration with other building systems, and proper design for the project-specific conditions and installation, etc.

While not mandatory, the OSHPD recommends the facility have a California licensed architect or engineer, or a California-licensed contractor assist in the review of the code compliance checklist herein below. In this manner the facility will have a better understanding of the scope of work that may be required for a code-compliant project prior to beginning the work.

Television (TV) / Monitor Bracket Installation

A wall-mounted Television (TV) / Monitor bracket installation requires a Building Permit but may be exempt from the plan review process in accordance with Health & Safety Code (H&SC) Section 129875. Simple installation of TV/Monitor brackets in qualifying OSHPD 2 SNFs and ICFs may be considered exempt from plan review, if certain criteria are met. This How-To Guide presents those criteria in a checklist format for general assessment of the specific project conditions. Installation of a TV/Monitor bracket without a permit is subject to an investigation fee, submittal of a project to the Office for plan review, demolition and/or rework of defective non-code complying work, etc. in accordance with the California Administrative Code, Title 24, Part 1, Section 7-128 **Work performed without a permit**.

The facility owner or his/her authorized agent should review this checklist with the **OSHPD Compliance Officer** to determine program eligibility, to assess the specific project conditions and determination of possible approaches to the application, review, permitting, and construction process. Possible approaches include, but are not limited to:

Installation with Minor Work – For relatively simple installation of a wall-mounted TV/Monitor bracket, where minor modifications (no structural work beyond that which are provided in this guide or shown on OSHPD Preapproved Details (OPDs), OSHPD Preapproval of Manufacturer's Certification (OPM), repairs, or remedial work is necessary to bring the system into compliance with current code, the facility may have the work performed by its maintenance staff or by a California Licensed Contractor.

Companion Documents to FREER Manual

The "How To Guide" Series

New Project/Building Permit Application Requirements

Step 1. Verify that the project is eligible for this program. Consultation with the OSHPD Compliance Officer is recommended.

Step 2. Download and print the How-To Guide and complete the **Wall-mounted TV/Monitor Bracket Code Compliance Checklist** beginning on page 4 of this Guide and complete the **Application for New Project/Building Permit** beginning on page 12 of this Guide.

Step 3. Prepare a plan/sketch showing the location(s) and elevation(s) of where the TV/Monitor bracket(s) will be installed.

Step 4. Print two (2) complete sets of the entire package (the "How to" Guide with completed checklist and applications, and the plan/sketch), sign and date where required, and mail or deliver to:

For construction in Northern California, submit to:

Office of Statewide Health Planning and Development
Facilities Development Division
400 R Street, Suite 200
Sacramento, CA 95811
(916) 440-8300 phone
(916) 324-9188 fax

For construction in Southern California, submit to:

Office of Statewide Health Planning and Development
Facilities Development Division
700 North Alameda Street, Suite 2-500
Los Angeles, CA 90012
(213) 897-0166 phone
(213) 897-0168 fax

Upon written approval of the project by the Office, you may begin installation of the TV/Monitor bracket(s).

Wall-mounted TV/Monitor Bracket Code Compliance Checklist:
(**Note:** The Compliance Officer will field verify compliance with this checklist and additional work may be required to bring the installation into code compliance if found to be deficient.)

		Compliance		
A.	***Project Description***	***Yes***	***No***	***N/A***
1.	The project is for a single-story skilled nursing or intermediate care facility building of wood frame construction (OSHPD 2 Buildings).	❑	❑	
2.	The project is only for wall-mounted TV/Monitor Bracket(s) installation.	❑	❑	
3.	The Estimated Construction Cost (excluding equipment cost) or Contract Amount does not exceed $50,000.	❑	❑	
4.	Sketch of floor plan and wall elevation indicating area(s) of work and location(s) where the TV/Monitor Bracket(s) is/are to be installed is provided.	❑	❑	
5.	The details for installation are similar to those provided in this Guide or an OSHPD approved bracket will be used (OPM). (To be verified by the OSHPD Compliance Officer for applicability).	❑	❑	
B.	***General Requirements***			
6.	**Contractor.** When applicable, every contractor shall be licensed in the state of California.	❑		❑
C	***TV/Monitor Bracket Installation Requirements***			
7.	Supporting wall has full height studs supported at top by ceiling or roof framing members and anchored at the floor/slab. This program may not be used for installation of TV/monitor brackets to walls that are not full height from floor to ceiling. Wall mounting surface should have a maximum 5/8" thick drywall.	❑	❑	
8.	If installed in a corridor, the TV/monitor will not project horizontally from either side of a corridor more than 1-1/2 inches into the required width of an exit access corridor (corridors serving patient areas require an exit width of 8 ft.).	❑		❑
9.	The Flat Display Mounting Hardware is coordinated with the TV/Monitor to be installed (e.g. VESA Mounting Interface Standard, etc.) and any electrical/communication systems. If monitors will be used for access to an existing Medical Records (EMR) system, they must comply with the requirements in item no. 10 below. Monitors associated with the introduction of a new ERM system are not qualified for this program and must be a part of that project and be subject to office review.	❑	❑	

Companion Documents to FREER Manual

The "How To Guide" Series

10. The leading edge of the TV/monitor, more than 27 inches and not more than 80 inches, above the finish floor or ground will not protrude more than 4 inches horizontally into the circulation path of any room. ❑ ❑

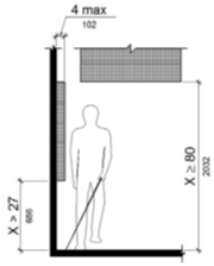

11. If the installation includes a monitor intended for interactive communication either by the patient or by medical staff (e.g. Electronic Medical Records) it will comply with either 11(a) or 11(b) as indicated below: (If yes, check the box for the applicable requirements) ❑ ❑

11(a) The installation includes a non-interactive display and a keyboard and/or other input interface. This installation will allow the centerline of the display to be adjusted to a height of 54", or less, above the floor level. The keyboard interface may be part of the unit and retractable to meet the conditions of item #8, when not in use, or be wireless. If the keyboard interface is part of the unit, it can be adjusted to accommodate use by those seated in a mobility device (e.g. wheelchair, scooter, etc.). Retractable keyboards may not be used to meet the conditions of Item no. 10 above. ❑

OR

-5-

12. TV/Monitor Bracket's support and attachments are pre-approved by OSHPD through OSHPD Preapproval of Manufacturer's Certification (OPM). Check the applicable OPM to be used below. (To be verified by the OSHPD Compliance Officer for applicability). ❑ ❑

The following are currently approved OPMs for TV/Monitor Brackets:
http://www.oshpd.ca.gov/FDD/Pre-Approval/OPM-0049-13.pdf ❑
http://www.oshpd.ca.gov/FDD/Pre-Approval/OPM-0061-13.pdf ❑
http://www.oshpd.ca.gov/FDD/Pre-Approval/OPM-0075-13.pdf ❑
http://www.oshpd.ca.gov/FDD/Pre-Approval/OPM-0084-13.pdf ❑

Future approval of OPMs for TV/Monitor brackets shall be posted at:
http://www.oshpd.ca.gov/FDD/Pre-Approval/preapproval_of_manufacturer_certification.html OPM # _____ ❑

Requirements for and verification responsibilities of a Structural Engineer, as required in the OPM Certification, shall not apply to projects that qualify for projects that qualify for "Installation with Minor Work" under the How-To Guide.

13. The TV/Monitor bracket wall plate will be anchored to two wood studs or wood blocking in accordance with the details below ❑ ❑

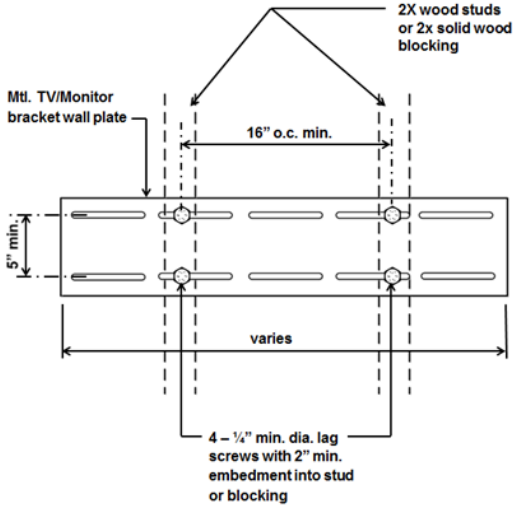

-7-

Companion Docume

The "How To Guide" Series

OFFICE OF STATEWIDE HEALTH PLANNING AND DEVELOPMENT
FACILITIES DEVELOPMENT DIVISION

RECEIVED

OFFICE USE ONLY
Project #

Application for New Project/Building Permit

Facility

Facility # _____ Facility Name _____
OSHPD Building # BLD - _____ Building Name _____
Type of Facility ☒ Skilled Nursing or Intermediate Care Facility

Record Detail

Record/Project Name WALL MOUNTED TELEVISION/MONITOR BRACKET INSTALLATION
Detailed Description

Application Specific Information

Submittal Type ☒ Final
Kind of Project ☒ Remodel/Alteration
Use Annual Building Permit ❍ Yes ❍ No

Contact Information

❍ Primary Type Legal Owner / Administrator (Required for all applications)
First Name_____ M.I.____ Last Name _____
Organization Name _____
Street Address _____
Address Line 2 _____
City_____ State_____ Zip Code _____
Phone_____ Phone 2_____ Fax _____
Signature_____ Date_____ Email _____

❍ Primary Type Authorized Agent (Authorization must be attached)
First Name_____ M.I.__ Last Name _____
Organization Name _____
Street Address _____
Address Line 2 _____
City_____ State_____ Zip Code _____
Phone_____ Phone 2_____ Fax _____
Signature_____ Date_____ Email _____

STATE OF CALIFORNIA – HEALTH AND HUMAN SERVICES AGENCY
OSH-FD-XXX- TV/MONITOR BRACKET (Rev 08/06/14)

oshpd "Equitable Healthcare Accessibility for California"

OFFICE OF STATEWIDE HEALTH PLANNING AND DEVELOPMENT FACILITIES
DEVELOPMENT DIVISION

Application Specific Information – Inspector of Record

OSHPD Certification Number_____ Class ❑ A ❑ B ❑ C
Are you engaged in a business or other employment that requires a portion of your time? ❑ Yes ❑ No If yes, describe

CERTIFICATION OF APPLICANT for INSPECTOR OF RECORD
I hereby certify that all answers to the questions on this form are true, and I agree and understand that any misstatement of material fact contained in this application will be sufficient cause for my dismissal on this project, and possible suspension or revocation of my Hospital Inspector Certification. If I undertake additional work other than stated herein, I will notify the owner, the Architect, and/or Engineer, and the Office of Statewide Health Planning and Development, without delay. If appointed, I will accept the responsibilities of Inspector of Record on the above mentioned project and will discharge the duties imposed upon me by all applicable sections of the Health and Safety Code.

Signature_____ Date _____

LEGAL OWNER
This person is being employed by the hospital subject to the approval of the architect, structural engineer, or other applicable professional engineer, and OSHPD, and is qualified and able to provide competent, adequate and continuous inspection during construction of this project.

Printed Name_____ Title _____

Signature_____ Date _____

PROFESSIONAL
This person known to me, is qualified, and is satisfactory to me as an Inspector of Record on this project.

Signature of Architect or Engineer in Responsible Charge_____ Date _____
Signature of Structural Engineer_____ Date _____
(Required on projects that include primary gravity and/or lateral load elements/systems)

OFFICE USE ONLY

OSHPD APPROVAL

Printed Name_____ Title _____

Enclosures

Number of Copies	Enclosure Type	Number of Copies	Enclosure Type
2	How-To Guide #2 with Compliance Checklist completed	2	Plans or sketch showing the locations and elevations of tv/monitor bracket(s) to be installed
2	Certificate of Insurance from a California licensed contractor or		

For construction in Northern California, submit to:

Office of Statewide Health Planning and Development
Facilities Development Division
400 R Street, Suite 200
Sacramento, CA 95811
(916) 440-8300 phone
(916) 324-9188 fax

For construction in Southern California, submit to:

Office of Statewide Health Planning and Development
Facilities Development Division
700 North Alameda Street, Suite 2-500
Los Angeles, CA 90012
(213) 897-0166 phone
(213) 897-0168 fax

STATE OF CALIFORNIA – HEALTH AND HUMAN SERVICES AGENCY
OSH-FD-XXX- TV/MONITOR BRACKET (Rev 08/06/14)

oshpd "Equitable Healthcare Accessibility for California"

Companion Documents to FREER Manual

Objectives and Opportunities

Objectives and Opportunities:

FDD's Top 3 Objectives for 2014

1. Continue to expand electronic plan review capabilities
2. Continue to expand the standard details, especially those for skilled nursing facilities
3. Continue to develop over-the-counter/computer capabilities and opportunities

Over-the-Counter Schedules

Offices:

Sacramento Office			Los Angeles (L.A.) Office	
Tuesdays	North Region	Click here to schedule an OTC Review w/the North Region.	North L.A. Region	Click here to schedule an OTC Review w/the North L.A. Region.
Wednesdays	Coastal Region	Click here to schedule an OTC Review w/the Coastal Region.	South L.A. Region	Click here to schedule an OTC Review w/the South L.A. Region.
Thursdays	Central Region	Click here to schedule an OTC Review w/the Central Region	South Region	Click her to schedule an OTC Review w/the South Region

Off-site Locations:

San Diego: 3rd Monday and Tuesday, Monthly

Santa Rosa State Building	Fresno CalFire Headquarters
2nd & 4th Tuesdays, Monthly	1st and 3rd Wednesday, Monthly*

2012 Briefing to the HBSB

Moving Forward Together - Electronic Plan Review

OSHPD is moving forward with electronic document processing:

- Applications (eServices Portal Client Access)
- Plan Review

Benefits:

- Reduces cost of printing, shipping, and handling
- Allows all disciplines to review plans concurrently
- Reduces turnaround time as comments can be sent electronically instead of packaging and shipping plans out
- Allows Virtual OTCs

oshpd
Office of Statewide Health Planning & Development

2012 Briefing to the HBSB

Paul's Vision!

Moving Forward Together - Virtual OTCs

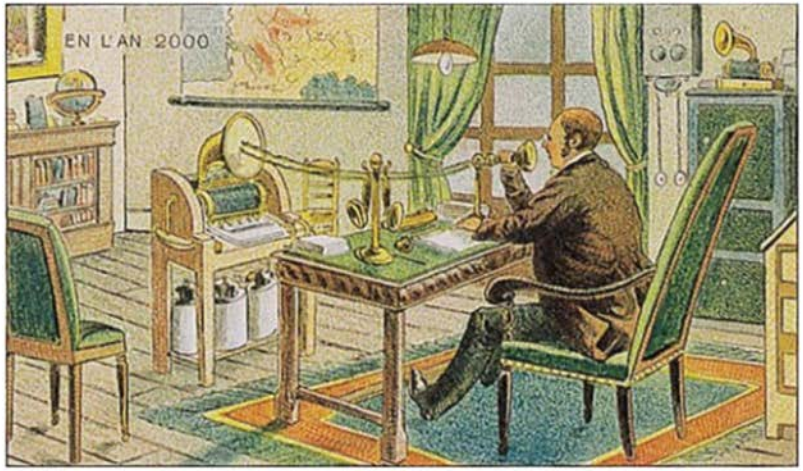

- Design team can be in different locations
- Reduces travel for design teams
- Reduces back checks

oshpd
Office of Statewide Health Planning & Development

Facilities Development Division

FDD's Operational/Strategic Planning

Objectives and Opportunities:

- Safe and functional hospital buildings through more efficient, timely, and quality reviews and construction observation
- Improve staff efficiency and effectiveness
- Invest in technology to keep pace with industry standard of development and design/construction
- Reduce costly business processes by utilizing technology to the extent possible
- Regular training for staff and industry to ensure knowledgeable, consistent code enforcement
- Simplify processes – improve workflow
- Optimize business processes based on project type
- Develop new cost effective building standards as the approaches to healthcare delivery changes/evolves
- Develop and implement meaningful performance objectives

FDD's Operational/Strategic Planning

Objectives and Opportunities:

FDD's Top 3 Objectives for 2014

1. Continue to expand electronic plan review capabilities
2. Continue to expand the standard details, especially those for skilled nursing facilities
3. Continue to develop over-the-counter/computer capabilities and opportunities

HBSB Information Technology Committee

Discuss / establish committee goals for 2014. Some potential goals for discussion:

- Poll vendors to see what new technologies might be developed and potentially used in hospital systems
- Request CISCO systems explain their redundancies on critical hospital systems
- Ensure current code and regulations do not prevent the use of emerging technology in hospital systems
- FDD staff share with the committee what they are seeing in electronic plan review
- Discuss the potential for Fire & Life Safety systems that utilize emerging technology
- Emerging technology for structural systems
- Assist FDD in determining how technology can be used to improve plan review processes
- Request "guest speakers" from hospital IT representatives

FDD's 2014 Objectives - Progress To Date

1. Continue to expand electronic plan review capabilities

- A purchase order for storage for eSP Electronic Document Review, at the cost of $259,238.64, is in progress
- Stanford is interested in pursuing a pilot program for FDD field staff using tablets. MOU to be developed
- Sutter has provided additional training for plan review staff regarding performing back checks using the "Blue Beam" program
- Use of eCA has now exceeded 75% of new applications
- Business processes/procedures for using the Smart Boards for virtual OTCs are in development

Virtual OTC's

OSHPD & Designer(s)
Two Contact Points

Virtual OTC's

Multiple Contact Points

Virtual OTC Software

- Any Video & Web Conferencing or Online Meetings platform
  - MS Live Meeting
  - MS Lyc
  - Web Ex
  - etc.

Virtual Over-the-Counters

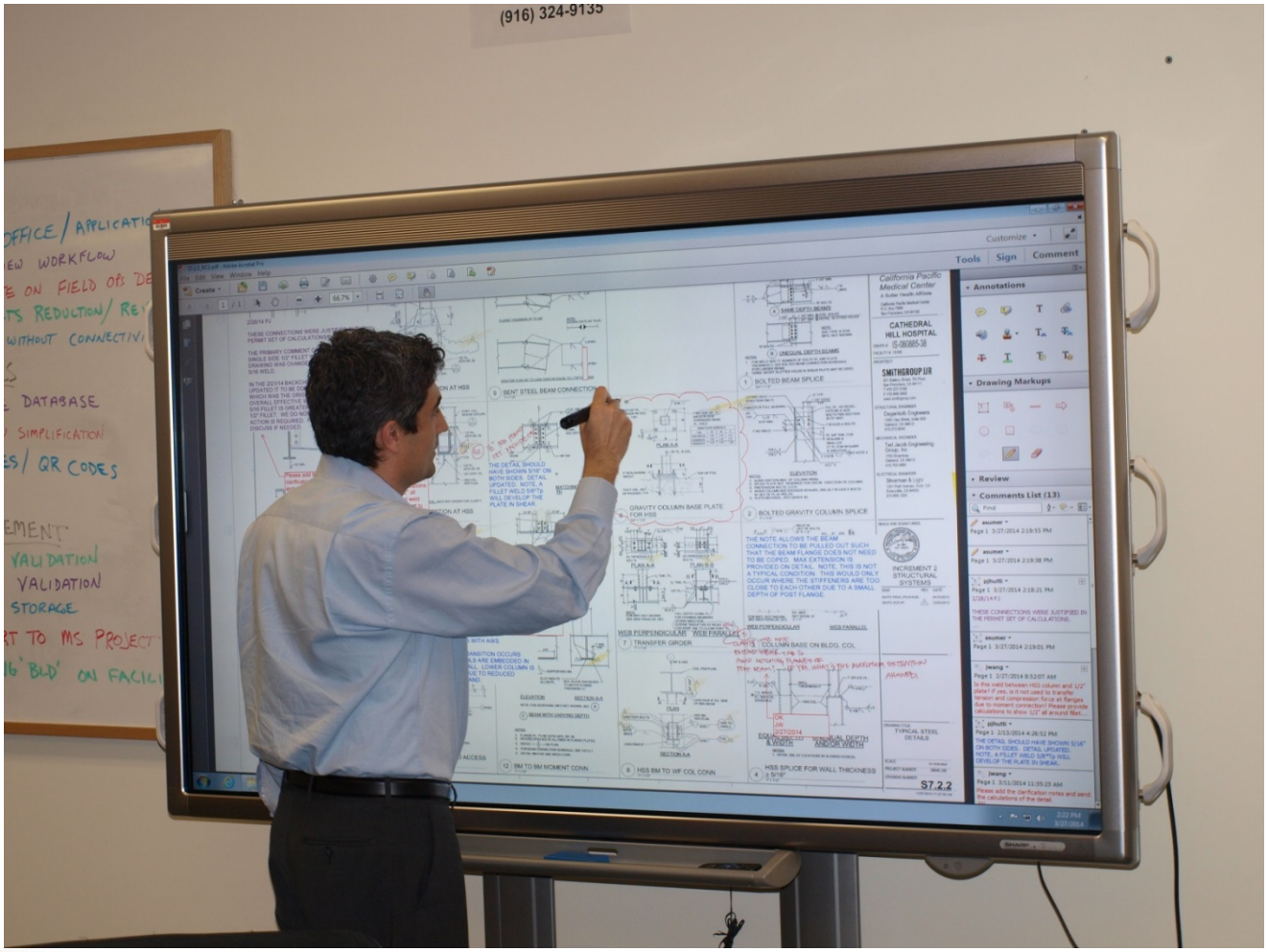

Virtual Over-the-Counters

Virtual Over-the Counter Demonstration Using Smart Board Technology

Hospitals in Google Earth

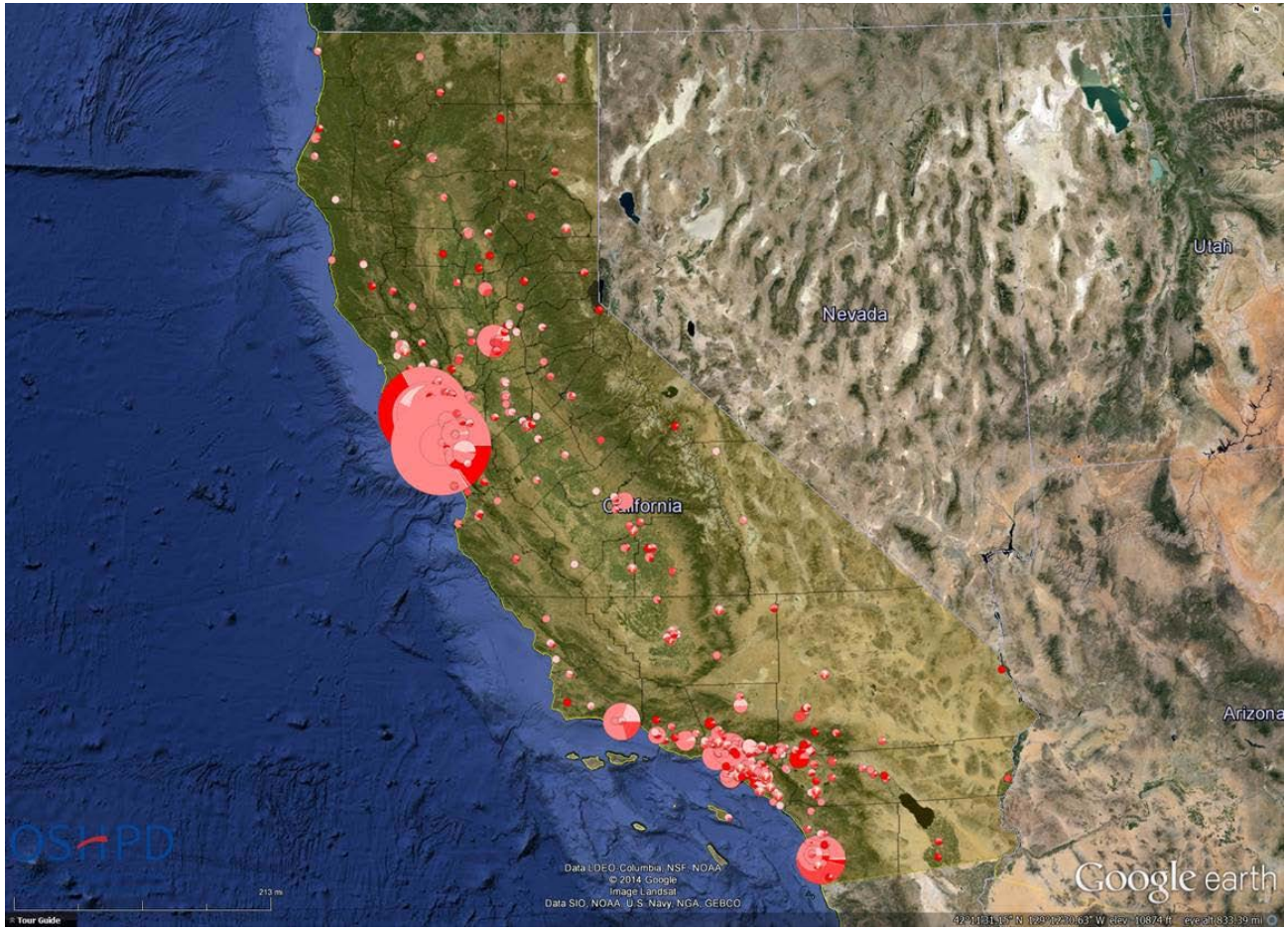

OSHPD
Office of Statewide Health Planning and Development

Information for Acute Care Hospitals and Skilled Nursing Facilities via Maps

Hussain Bhatia, Ph.D., S.E., Supervisor, Seismic Compliance Unit, OSHPD/FDD

Facilities Development Division

Mapping Resources Available

- All general acute care hospital facilities are mapped and available at http://oshpd.ca.gov/fdd/seismic_compliance/FacGoogle/index.html
  - Number and costs of active projects at a facility
  - List of buildings with SPC and NPC ratings
  - Links to site maps
  - Links to facility and building pages in the eCA portal
  - Access all related projects for facility or any specific building

Mapping Resources Available

- All skilled nursing and intermediate care facilitates are mapped and available at http://oshpd.ca.gov/FDD/SNF-ICF/SNF-ICFgoogle.html
  - Number and costs of active projects at SNF/ICF
  - Links to facility page in the eCA portal

Emergency Operations Uses

- Shakemaps for recent earthquakes available at http://earthquake.usgs.gov/earthquakes/shakemap/
- Fault traces available from http://earthquake.usgs.gov/hazards/qfaults/google.php

Update Frequency/Future Revisions

- Updated approximately every other week – studying ways to make the data live
- Adding new features and information that may be useful
- Any suggestions are welcome

Auto Codes

- AutoCodes – What is it?
  - The transformation of the building code review process, leveraging digital data to change the industry from a manual paper-dependent process to a digital review method.
- AutoCodes objectives:
  - Consistency and accuracy of code review / approval.
  - Transparency throughout the code review process.
  - Expedited code review approvals.
  - Reduced code review process costs.
  - Reduced resource needs for code review process.

Auto Codes

Fiatech™

TARGET

KAISER
PERMANENTE®

SOLIBRI

avolve
software

MADCAD.com

Auto Codes

Design and Building Process ***Today***

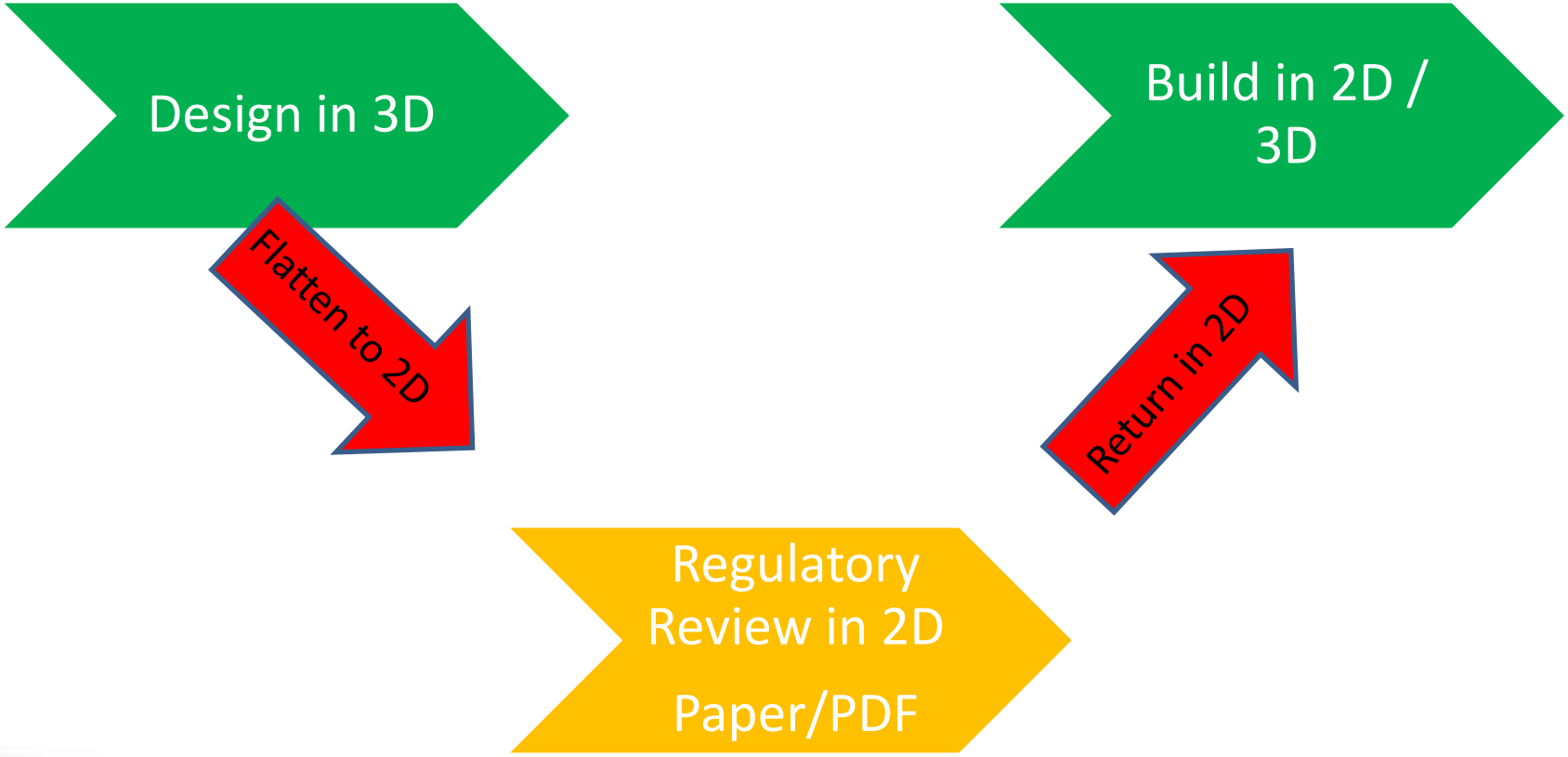

Auto Codes

Design and Building Process ***Future***

Auto Codes

Model Protocol Guidelines: The modeling matrix

IBC 2009				OSHPD - CBC Title 24				ICC/ANSI A117.1 (2009)	Lead	MODEL REQUIREMENT	
Chapter	Section Number	Section Name	Exception	Chapter	Section Number	Section Name	Exception			Model Object (Element)	Parameter / Operation: LOD 300
Chapter 10 - Means of Egress				Chapter 10 - Means of Egress				N/A			
Chapter 10	SECTION 1001 ADMINISTRATION								N/A		
Chapter 10	SECTION 1002 DEFINITIONS								N/A		
Chapter 10	1002.1	Definitions		Chapter 10	1002.1	Definitions				Room	Occupiable space
Chapter 10	SECTION 1003 GENERAL MEANS OF EGRESS								Swetha		
Chapter 10	1003.2									Ceiling	Clear height
Chapter 10	1003.2		2							Building	Room or Project Information
Chapter 10	1003.2		3	Chapter 10	1003.2		3			Ceiling attached objects	Dimensions of the object
Chapter 10	1003.2		4	Chapter 10	1003.2		4			Stair	Headroom clearance
Chapter 10	1003.2		5	Chapter 10	1003.2		5			Door	Clear height
Chapter 10	1003.2		6	Chapter 10	1003.2		6			Ramp	Headroom clearance
Chapter 10	1003.2		7	Chapter 10	1003.2		7			Slab	Clear height
Chapter 10	1003.2		7	Chapter 10	1003.2		7			Ceiling	Clear height
Chapter 10	1003.2		7	Chapter 10	1003.2		7			Room	Type
Chapter 10	1003.2		8	Chapter 10	1003.2		8			Room	Type
Chapter 10	1003.2		8	Chapter 10	1003.2		8			Room	Height
Chapter 10	1003.3.1			Chapter 10	1003.3.1						
Chapter 10	1003.3.1		x	Chapter 10	1003.3.1		x			Door	Door closer and stops
Chapter 10	1003.3.2		x	Chapter 10	1003.3.2		x			Door	Door closer and stops
Chapter 10	1003.3.1		x	Chapter 10	1003.3.1		x			Stair	Guardrail/ Wall
Chapter 10	1003.3.2			Chapter 10	1003.3.2					Signage	Object mounted on posts
Chapter 10	1003.3.3			Chapter 10	1003.3.3					Wall	Dimensions of the object
Chapter 10	1003.3.3			Chapter 10	1003.3.3					Space	Projections into sides of space
Chapter 10	1003.3.3		x	Chapter 10	1003.3.3		x			Handrail	Dimensions of the handrail
Chapter 10	1003.3.4		x	Chapter 10	1003.3.4		x			Handrail	Dimensions of the handrail
Chapter 10	1003.3.4			Chapter 10	1003.3.4					Room	Identify type Accessible Route
Chapter 10	1003.3.5			Chapter 10	1003.3.5					Room	Width of Accessible Route
Chapter 10	1003.4										

Auto Codes

Egress Analysis & Occupancy Rules

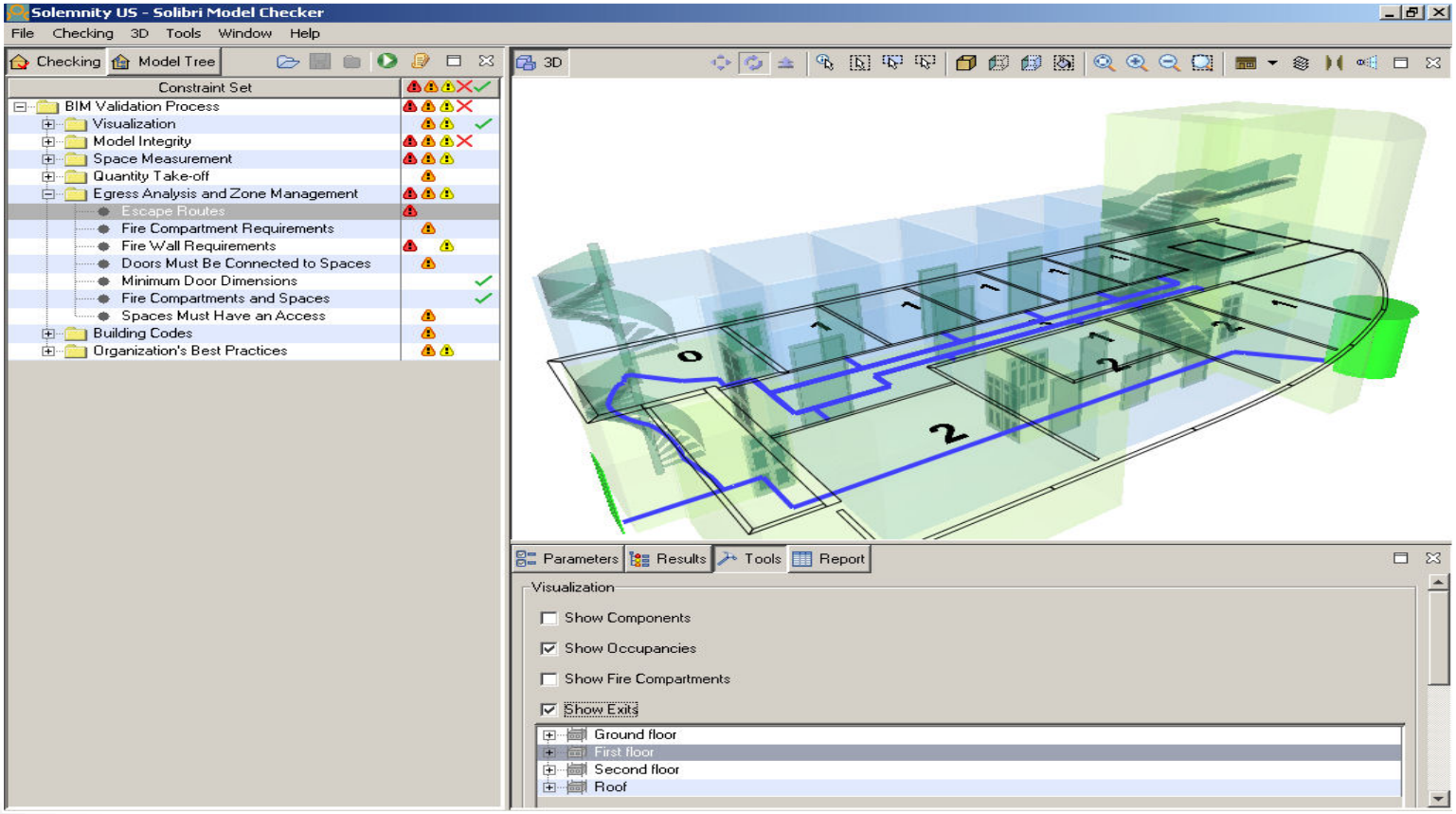

Video overview of the AutoCodes project

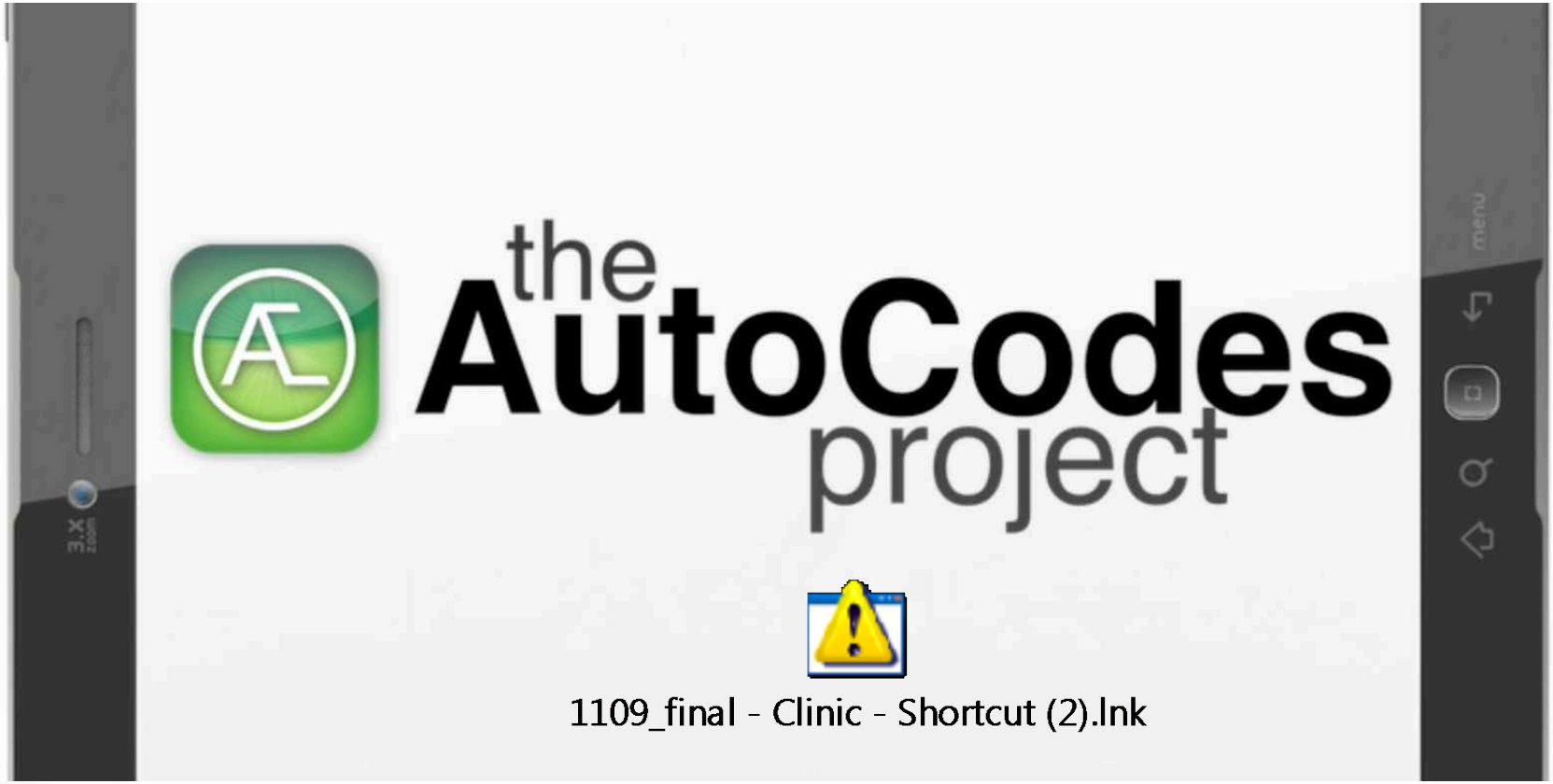

OSHPD Office of Statewide Health Planning and Development

Hospital Building Safety Board
400 R Street, Suite 200
Sacramento, California 95811-6213
(916) 440-8453
Fax (916) 324-9118
www.oshpd.ca.gov/Boards/HBSB/index.html

HOSPITAL BUILDING SAFETY BOARD
Education and Outreach Committee

Wednesday, September 10, 2014
10:00 a.m. - 4:00 p.m.

Office of Statewide Health Planning and Development
400 R Street, Suite 452
Sacramento, CA 95811
(916) 440-8453

and

Metropolitan Water District Headquarters
700 N. Alameda Street, Suite 2-546
Los Angeles, CA 90012
(213) 897-0166

Committee Members Present
Arlee Monson, Chair
Eric Johnson, Vice-Chair
Burt Hurlbut
John Egan
Scott Karpinen

HBSB Staff
Linda Janssen, Executive Director
Cathy Kane
Evett Torres

OSHPD Staff
Paul Coleman, FDD Deputy Director
Hussain Bhatia
Glenn Gall
Mohammad Karim
Lorin Neyer
Kim Rhodes
Chris Tokas
Elizabeth Wied, Legal Counsel

1. Welcome and Introductions

Committee Chair Arlee Monson called the meeting to order. He welcomed everyone and invited them to introduce themselves. Ms. Janssen introduced Kim Rhodes, the newest manager in the Facilities Development Division.

Mr. Coleman reported briefly regarding the Napa earthquake: the Queen of the Valley Medical Center had received three yellow tags. Mr. Tokas stated that the hospital was built in the '70s, making it an SPC-3 building.

2. Review and approve the draft August 13, 2014 Meeting Report

Mr. Monson summarized that the August meeting was mainly focused on the upcoming seminar with the same agenda as today's meeting.

> **MOTION**: (M/S/C/) [Hurlbut/Karpinen]
>
> The committee voted unanimously to approve the August 13, 2014 Meeting Report.

3. "Hot Topics" Seminar Logistics Update

- **Review of Dates, Venues and Logistics**

Ms. Janssen stated that the dates are set for October 9 in Anaheim and October 30 in Concord. Internet landlines and connectivity for the laptop to the sound system were added to the hotel contracts; this has increased the registration fee by $10. Ms. Janssen noted that registration has been sluggish, but if it follows the same pattern as the last seminar, it will increase during the last two weeks.

Ms. Kane stated that hotel reservations must be made by September 17 for Anaheim and October 8 for Concord, in order to get the state rate.

Mr. Monson stated that Joe La Brie will be the facilitator for both seminars, and he needs bios from all presenters for the Introductions.

Ms. Janssen emphasized that the presentations will go to print on Monday morning, September 15. Presenters can make last-minute changes after that if they wish, but will have to specify during their presentations when slides are not found in the handouts.

- **Discussion and Public Input**

Mr. Gall suggested using electronically formatted handouts in the future. Mr. Coleman requested the inclusion of a question on the end-of-seminar survey, asking whether people would prefer hardcopy or electronic handouts.

4. Preview of Seminar Presentations and Discussions

Mr. Monson stated that the four sessions would each last about 90 minutes with a short break. He listed the speakers. Q & A will be held at the end of each session.

- **Session #1 – Functional Program and Materially Alter (2013 CAC)**

Mr. Gall, the first speaker, said that he had a PowerPoint presentation he had given to the American Medical Association (AMA) the previous week; he will pare it down for the upcoming seminar. The slides will focus on PIN 57 to explain how to get to the Functional Program, per the California Administrative Code (CAC).

Mr. Gall sought to address the disconnects between the project OSHPD approves, and what tries to get licensed at the end – the physical plan issues and operational issues.

Mr. Monson asked if Mr. Gall will go through the CAC's requirements point by point; Mr. Gall replied that he would not have time during the allotted 10 minutes.

Mr. Hurlbut suggested presenting the Functional Program as a value-added process. Mr. Gall explained that the PIN is a paring-down of the process normally used by Kaiser and Sutter for development of new projects – it wasn't looked at as newly-conceived regulatory requirements. Put in the code context, it is beneficial in terms of the licensing end of the spectrum to match up with what is being designed and approved. That is really the message.

Mr. Gall will address the purpose of the Functional Program: it is not a document that is approved; it informs what OSHPD is engaged in on its side of the table. Mr. Monson felt that the emphasis on licensing is wise.

Mr. Monson said that his portion will take about 15 minutes. He and Mr. Gall will leave about 30 minutes at the end for Q & A.

An Interested Party said that he would not want to assume that there will be two types of documents that the architects have to present – one that satisfies OSHPD and one that satisfies the owners' programs. Mr. Gall explained that OSHPD does not typically get an owner's program. He will be explaining what the PIN says as to a Functional Program; it is not a typical architectural program. It looks at the physical space in context and also how it is staffed in providing the service. It informs Licensing as well.

Mr. Monson went through the PowerPoint in detail for the committee. The slides addressed the following.

- The Owner's Program
- The Programming Process
- The Complete Program "Picture"
- Narratives that Support the Design
- Some Considerations:
  - The ICU Bedroom
  - The LDR/LDRP Bedroom
  - The Med Surg Bedroom
- "Recommended" Guidelines and Special Considerations

Mr. Monson told an Interested Party that he would not be addressing PIN 57 – Mr. Gall would take care of that. Mr. Gall added that it did not relate directly with Mr. Monson's slides, which would be describing a process actually more involved than Functional Program, that OSHPD is looking for as a submittal.

Mr. Coleman explained one of the drivers behind the whole program: a project had involved converting a courtyard into an operating room. The facility did not go through a program to determine if the support spaces for the new surgery were adequate, but the project went through plan review and was approved, then built. The facility could not get the surgery licensed and had to go back and do the project over.

Mr. Coleman emphasized that this program matches everything up for a project – function, operation, purpose, support spaces, staffing, etc. – to produce a viable result.

Mr. Johnson noted that the floor plan schematics contain a lot of information; Mr. Monson might want to pull them.

An Interested Party suggested having Mr. Monson and Mr. Gall trade off talking about the regulations, with Mr. Monson perhaps demonstrating how they impact the owner. Mr. Gall pointed out that when he presents with Mr. Monson, some members of the audience may become confused between best practices (Mr. Monson) and code requirements (Mr. Gall).

Mr. Coleman added that design professionals are doing things above and beyond what OSHPD is asking for. In designing a program for the owner, they are presenting only certain elements to OSHPD.

Ms. Neyer commented on the value of italicizing content derived from the PIN.

Mr. Monson noted that he had not covered small projects, as they are not used to any program whatsoever; there is no analysis of interrelationship, need, or operation. He also did not cover the design professional's expectation of the reviewer's use of the Functional Program.

Mr. Karpinen said that he and Gordon Oakley would give the presentation on Materially Alter. He provided a brief review of the high-level slides. In answer to a question from Mr. Tokas, Mr. Karpinen said that he will be speaking from the perspective of the code, and will cover material extracted from the CAN.

Ms. Wied suggested including a caveat that if a project has numerous changes that are non-materially alter, the cumulative result may be that the whole project has actually been materially altered.

The PowerPoint presentation includes:

- Definition of Materially Alter
- Amended Construction Documents (ACDs)
- Application for ACD
- Changes That Do NOT Materially Alter (*several examples*)
- Architectural Examples
- Fire and Life Safety Examples
- Structural Examples
- Mechanical Examples
- Electrical Examples
- Alternate Solution Examples
- Documenting Non-Materially Alter Changes

Mr. Coleman requested for Mr. Karpinen to point out that if the intent is to have the ACD reviewed in the field, it needs to be submitted electronically.

Mr. Monson suggested picking out key slides of examples that represent the list and breaking them down, and letting the attendees read the rest. The group suggested including an appendix.

Mr. Coleman suggested including an example log for the last section on documenting.

The group established that this section would be 30 minutes long.

- **Session #2 – Standard Details and Pre-approved Certifications (OPD, OPM, OPL and PIN 58)**

Mr. Hurlbut said that he would begin the session with a game: he would give the audience an answer, and they must supply the question. The PowerPoint will continue with the following slides.

  - Standard Details – *definition*
  - PIN 51 – *it established Standard Details*

  Mr. Hurlbut will cover some of the Standard Details:

  - Partition Wall Details
  - Suspended Ceiling Details
  - Gypsum Board Ceiling Details
  - Fire-Resistive Details

Mr. Hurlbut will give information on PIN 51/incorporating details into a project. This will include applicability of details to individual projects. He will emphasize the General Notes and flowcharts at the beginning of each section.

Dr. Karim requested for Mr. Hurlbut to state that any code can be used for details; it does not have to be 2013 code.

Mr. Tokas will cover OPMs, OSPs, OPDs, and OPLs.

- He will begin with a brief discussion on nonstructural components, supports, and attachments.
- He will clarify components, supports, and attachments.
- He will clarify the issue between anchors and bracing vs. functionality: Position Retention vs. Special Seismic Certification.

He will explain how the programs work:

- OPM scope; what it is not; limits; ASCE-7 requirements; examples of piping stand, cabinet supports and attachments, and distribution systems; where to find OPM details.
- OSP components and systems; specifics of what it does; manufacturer's responsibility; who is involved; label information; seismic certification by testing; and where to find information. (The audience will be aware that this is for 2013 code going forward.)
- OPL foundation pillars; CBC requirements; tests requiring approval; OPL scope and basis; scope of PIN 58; CBC requirements; U.S. test facility requirements; the responsible charge of RDPs; test report requirements;

OPLs for non-U.S. labs; OPL requirements; acceptable accreditation; quality assurance; special inspection agencies; OPL submittal requirements; major benefits of preapproved programs.

Mr. Coleman requested Mr. Tokas to stress that it is to the laboratory's advantage to be on the OSHPD list so that designers can select the laboratory as pre-approved. He added that the Division of the State Architect (DSA) Laboratory Evaluation and Acceptance (LEA) program on the structural test usually limits the tests for which they will check for qualification.

Mr. Tokas said that he would add a slide regarding responsibilities of the plan review staff and field staff. Mr. Coleman requested information on conflict of interest as well. Mr. Tokas said that he would also add a slide on minimum requirements to be included on the design documents pertaining to OPM.

- **Session #3 – Gateway to OSHPD Services (e-Services Demonstration)**

Mr. Coleman stated that Mr. Dunger may do a live demonstration. He has PowerPoint slides he has used at a number of different venues, and he will be stressing recent updates to eSP.

- **Session #4 – OSHPD Developing Processes (OTC Smart Board Demonstration)**

Mr. Coleman told the group that Session 4 will include:

  - A background of FDD and its responsibilities

- Reasons for higher standards in hospitals
- Direction of future codes and policies for adoption of codes
- CANs and PINs
- The 2016 code cycle
- Keeping code responsive to current medical practice
- The Information Technology Committee
- Objectives and opportunities for this year
- Standard Details
- The “How-To Guide” series

Mr. Tokas will present:

- Over-the-Counter (virtually over-the-computer) capabilities and opportunities
- Progress to date on FDD’s 2014 objectives
- Virtual OTCs with live demonstration

Dr. Bhatia will present:

- Hospitals in Google Earth with live demonstration (Mr. Johnson suggested linking SB 499 back through Google Earth, and addressing the topics of security and hackers.)

Mr. Coleman will present:

- Auto Codes, including a short video

- **Discussion and Public Input**

The group discussed having enough time to test the Internet connectivity and sound system in the venue before the seminar starts; Mr. Johnson pointed out that firewalls present possible issues in venues.

5. Comments from the Public/Board Members on Issues not on this Agenda

There was no further discussion from the public or board members.

6. Adjournment

Mr. Monson adjourned the meeting at 12:58 p.m.

Instrumentation Committee

OSHPD Office of Statewide Health Planning and Development

Hospital Building Safety Board
400 R Street, Suite 200
Sacramento, California 95811-6213
(916) 440-8453
Fax (916) 324-9118
www.oshpd.ca.gov/Boards/HBSB/index.html

10/15/14

HOSPITAL BUILDING SAFETY BOARD
Instrumentation Committee

MEETING NOTICE
Wednesday, October 29, 2014
10:00 a.m. — 4:00 p.m.

at the
Office of Statewide Health Planning and Development
400 R Street, Suite 452
Sacramento, CA 95811
(916) 440-8453

And, at the
Metropolitan Water District Headquarters
700 N. Alameda Street, Suite 2-546
Los Angeles, CA 90012
(213) 897-0166

Board Members: Lou Gilpin, Chair; John Egan, Vice-Chair; Rami Elhassan; Trailer Martin; Simin Naaseh; Brian Spindler

Consulting Members: Moh Huang; Donald Jephcott; Tony Shakal

OSHPD Staff: Chris Tokas; Roy Lobo

HBSB Staff: Linda Janssen, Executive Director; Cathy Kane; Evett Torres

MEETING AGENDA
NOTE: Agenda order is tentative and subject to change without prior notice. All times are approximate and subject to change. A 30-minute to one-hour lunch will be taken sometime during the day.

1. **Welcome and Introductions**

2. **Review the October 29, 2013 Meeting Report**
   - Discussion and Public Input

3. **Reports and Briefings**
   - OSHPD Briefing
     - C. Tokas and R. Lobo, OSHPD
   - Annual Report - OSHPD/California Strong Motion Instrumentation Program (CSMIP) Hospital Instrumentation Project
     - M. Huang
   - Review of any newly proposed candidate hospital buildings to add to the current candidate list:
     - D. Jephcott
     - Review candidate hospital building documentation
   - Discussion and Public Input

4. **Selection and Prioritization of New Hospital Buildings for instrumentation, 2014-2015 Fiscal Year**
   - Discussion and Public Input

5. **Set Next Meeting Date/Agenda**
   - Discussion and Public Input

6. **Comments from the Public/Board Members on Issues not on this Agenda:**
   The Board will receive comments from the public/members at this time on matters not on the agenda. Matters raised at this time will be taken under consideration for placement on a subsequent agenda.

7. **Adjournment**

REMINDER: Please call (916) 440-8453 on Tuesday, October 28th after 3:00 p.m. to confirm that the meeting will be taking place as scheduled. The recording will verify the meeting date and location.

<u>NOTE:</u> Meeting facilities and restrooms are accessible to the physically disabled. If any special accommodations (assistive listening device, sign language interpreter, etc.) are needed, please contact Board Staff at (916) 440-8453. Requests should be made as soon as possible but no later than 10 business days prior to the meeting.

Parking:
Sacramento—There are garages at 500 R Street and CalPERS Plaza. CalPERS Plaza has two entrances: one on Fifth Street, north of R Street, which charges $2./hour or $8/day; and another on Q Street, between Fourth and Fifth Streets, which charges $2.50/hour or $12/day. There are also 10-hour parking meters and stations around the perimeter of the building.

Los Angeles—There is valet service at the Metropolitan Water District Building that is available 8 am to 5 pm and they charge between $6 and $14. There is also Five Star Parking lot on Cesar Chavez Avenue and Alameda Street that charge $14/day or $2.00 every 20 minutes.

Questions? Call Board Staff at the above phone number.

This page left intentionally blank.

OSHPD
Office of Statewide Health Planning and Development

California Strong Motion Instrumentation Program (CSMIP)

OSHPD Briefing,

HBSB Instrumentation Committee

October 29, 2014

Facilities Development Division

2013 - 2016 OSHPD/CGS Contract

- OSHPD/CSMIP Hospital Instrumentation Program 2013-2016 Contract Renewed in July 2013
- Contract Duration
  - Three (3) Years
  - July 1, 2013 through June 30, 2016
- Contract Value
  - $798,900.00 Total
  - $266,300.00 per Year (Approximately)

FY 2013-2014 Activities

- Maintenance of Strong Motion Instrumentation (58 Hospitals, 63 Bldgs) and Instrumentation of New Buildings Cost
- Current Expenditures = $189,600
- Balance = $609,400

Instrumented Hospital Buildings Completed - FY 2013 -2014

- San Francisco General – New Trauma Center
- Sharp Memorial Hospital – South Tower
- Community Hospital of Redlands – Radiology addition

Instrumentation reference in 2013 CBC

- CBC 104.11.4
  - Buildings with alternate systems for the lateral force resisting system.
- CBC 1616A.1.41
  - LFRS with Seismic Isolation, Damping, systems not listed in ASCE 7 Table 12.2-1
- *CBC 3415A*
  - Owners of existing structures, selected by the enforcement agency for the installation of earthquake-recording instruments.
- CBC Appendix L
  - S1 > 0.4, and either
    - exceeds 6 story in height and floor area > 60,000 sq,ft.
    - Exceeds 10 story in height regardless of floor area

Instrumentation requirements

- CBC 1616A.1.41
  - Sufficient number of instruments to characterize the building response. Must have one tri-axial free field instrument or equivalent.
  - *The instruments shall be interconnected for common start and common timing. Each instrument shall be located so that access is maintained at all times and is unobstructed by room contents. A sign stating "MAINTAIN CLEAR ACCESS TO THIS INSTRUMENT" shall be posted in a conspicuous location.*

Hospital Instrumentation Rqt's

CBC Required Instrumentation

OSHPD Req'd Instrumentation (HSSA)

§129840. Post-earthquake studies

Subsequent to the occurrence of any earthquake, the office may make, or cause to be made, studies of health facilities within the area involved.

- HBSB Recommendation for Instrumentation
  - OSHPD to require Owner's to Instrument Buildings approved thru the Alternate Means of Compliance (Design Criteria) process.
    - OSHPD is enforcing HBSB Recommendation
- Instrumented by Owner,
  - CSMIP is responsible for Maintenance, Data Retrieval and Processing.

Instrumented Hospital Buildings

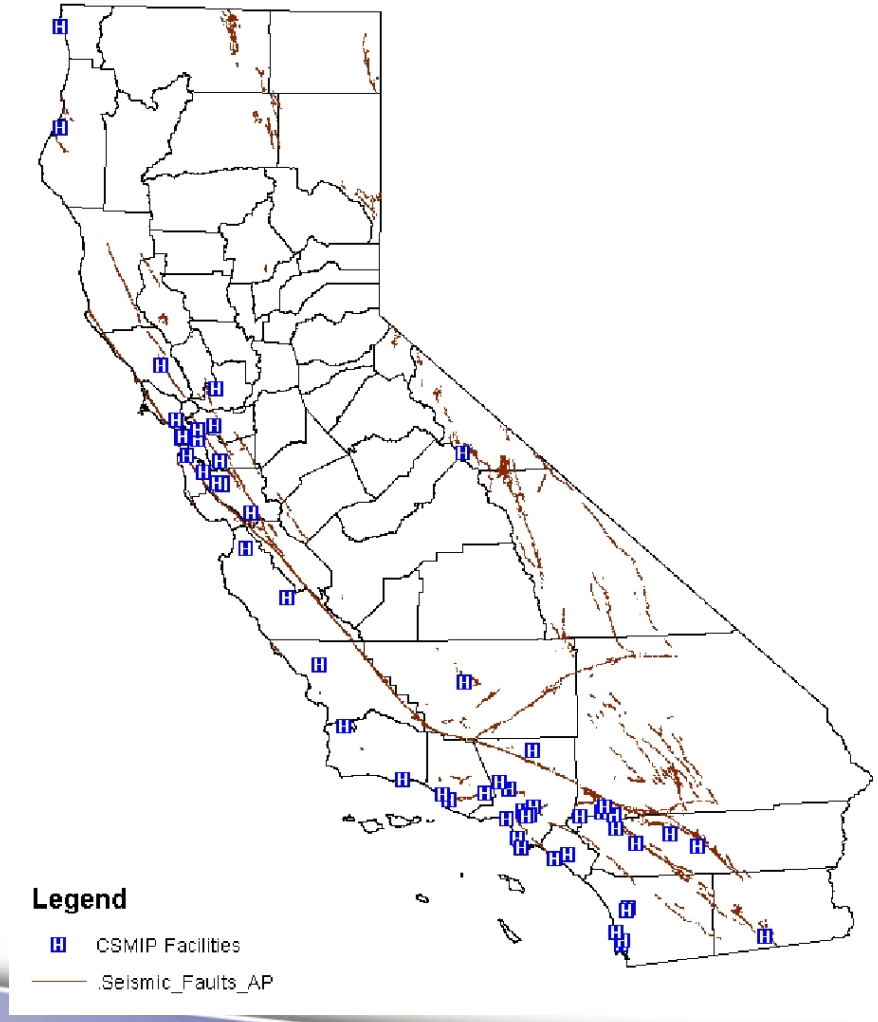

Lateral Seismic Resistant Systems in Hospitals, Instrumentation reqd. by Owner

- Common Seismic Resistant Systems Requiring Design Criteria for OSHPD approval:
  - Structures with Passive Energy Dissipation Systems
  - Structures with Seismic Isolation Systems
  - Other structures of conventional LFRS systems with alternate methods of compliance.

Other Criteria for HBSB Instrumentation Selection

- Proximity to fault capable of generating earthquake M>6.5
- Non Standard structural systems
- Adjacent to other buildings with pounding probability
- Buildings with irregularities
- Seismically retrofitted buildings (VSI) & HAZUS
- Soil type (soft soils)

Buildings for Owner paid Instrumentation

- CPMC Cathedral Hill, Viscous Wall Dampers – In construction
- Century City Hospital, VSI - Completed
- Lathrop PARC, Lead rubber base isolated – No activity on construction – site abandoned.
- Barlow Respiratory Hosp, Side plate conn – In Review.

Possible Candidates

- Loma Linda University Medical Center - 10677 – Base isolated building.
- St John's Pleasant Valley – 13181 – 3 story Hospital Addition.
- Henry Mayo Newhall Hospital – 13333 – 5 story inpatient tower with helipad and basement. –Moment Frame.
- Casa De Las Campanas San Diego – 26080 – 72 Bed SNF – one story wood.

OSHPD/CSMIP

HOSPITAL INSTRUMENTATION

Annual Report

July 2013 through June 2014

OSHPD Agreement 13-4097
(DOC No. 1013-960R)

California Strong Motion Instrumentation Program
California Department of Conservation
California Geological Survey

801 K Street, MS 13-35
Sacramento, California 95814-3531

October 15, 2014

Annual Report

OSHPD/CSMIP Hospital Instrumentation by the

California Strong Motion Instrumentation Program

July 2013 through June 2014

I. INTRODUCTION

The California Strong Motion Instrumentation Program (CSMIP) of the California Geological Survey, Department of Conservation, performs installation, maintenance and data recovery for strong motion instrumentation in hospitals through an interagency agreement with the Office of Statewide Health Planning and Development (OSHPD). Funding strong motion instrumentation of hospitals through the interagency agreement is in lieu of normal building-permit fee funding referenced in Chapter 8 of the Public Resource Code.

Hospital buildings have been instrumented under eight previous Interagency Agreements: 89-0046 (DOC 1089-025R), 92-3187 (DOC 1092-541R), 95-6011 (DOC 1095-570R), 98-9034 (DOC 1098-701R), 01-2069 (DOC 1001-753R), 04-5072 (DOC 1004-790R), 07-7071 (DOC 1007-911R), and 10-1266 (DOC 1010-930R). These agreements extend from July 1989 through June 2013, each covering a period of three fiscal years. The ninth and current interagency agreement 13-4097 (DOC 1013-960R) is also for a period of three years, from July 1, 2013 through June 30, 2016. This Annual Report covers activities performed during the first fiscal year of the Agreement, July 1, 2013 through June 30, 2014.

During July 2013 through June 2014 (FY13-14) the new Trauma Center of the San Francisco General Hospital was instrumented. The building reference free-field will be installed before the hospital opens in 2015. In addition, instrumentation of two hospital buildings with Voluntary Seismic Improvement (VSI) projects was completed. These two buildings are the South Tower at Sharp Memorial Hospital in San Diego and the Radiology Addition/Building 7 at Community Hospital in Redlands. A reference free-field station was also installed at each of these two hospitals. The instrumentation of these three hospital buildings were installed with owner-paid instrumentation and CSMIP's guidance and assistance. Like most other hospitals instrumented by CSMIP, these stations have near-real-time data communication capability, which allows the recorded motion to be automatically transmitted to Sacramento immediately after an earthquake to be processed for use by OSHPD and the hospital owners. The three hospital buildings instrumented during the first year of the current contract are listed in Tables 2 and 3.

OSHPD-funded Instrumentation of Hospitals

During FY13-14, CSMIP worked on the instrumentation of three hospital buildings that will be funded by OSHPD. These three buildings are listed in Table 1. The instrumentation of Santa Clara Valley Hospital's Replacement Bed Building 1 in San Jose has been significantly impacted by construction delays. The initial marking of the sensor locations was performed in July of 2012; the sensor marking was repeated in March of 2014 as the project move forward after delays. The field installation was necessarily delayed to 2015 due to delays in construction. In contrast the instrumentation of a new building at UCSF Hospital at Mission Bay has moved forward more smoothly and is expected to be completed before the hospital opens in February 2015. The initial engineering work is underway on the Kaiser Replacement Hospital in Oakland, and the owner's permission has been obtained.

Owner-paid Instrumentation of Hospitals

In addition to the hospital instrumentation funded under the OSHPD/CSMIP contract, a significant addition to CSMIP hospital instrumentation work involves detailed technical guidance and assistance for hospital instrumentation projects for which the owner absorbs the capital cost of instrumentation under OSHPD regulations.

There are a total of 13 CSMIP-assisted hospital instrumentation projects that are currently underway or were completed during FY13-14. Seven are new hospital buildings (Table 2) which are either base-isolated, with energy dissipation devices, or use an Alternate Means of Compliance in their design, requiring instrumentation during construction per OSHPD regulations. Another six are existing hospital buildings that have been or will be retrofitted under the Voluntary Seismic Improvement (VSI) regulations and therefore require instrumentation at owner expense (Table 3).

CSMIP guidance and assistance for these hospitals includes, first, determining effective sensor locations after study of the structural plans, in conjunction with the structural engineer of record and an OSHPD engineer. The second step is the development of an instrumentation plan that reflects a consensus among OSHPD staff, the owner's representative and CSMIP staff. This is followed by the development, by CSMIP staff, of a detailed technical design for the system to be installed, called the Technical Specification Letter (TSL). The TSL is provided to the owner, their contractors and to OSHPD, and included in the plans. It specifies acceptable instrument options to be procured as well as approved installation practices and details for the location and interconnection of the system components. This is followed by an on-site field visit by CSMIP staff accompanied by a construction contractor representative, an OSHPD representative and others, during which sensor locations are marked in the building. During the contractor's work CSMIP staff assists with instrumentation issues as they arise. The final step, some months or years later, is on-site testing and acceptance, when warranted, of the instrumentation system. With acceptance of the instrumentation system, CSMIP takes on long-term maintenance of the instrumentation as well as data recovery and processing, supported by OSHPD. This program provides significant benefit to the owner, OSHPD and earthquake engineering specialists.

Though beneficial overall, it represents a significant impact to CSMIP ongoing work. The instrumentation status for each of the 13 buildings of this type is included in Tables 2 and 3.

Summary of Instrumented Hospitals

A total of 64 hospital buildings have been instrumented in the OSHPD/CSMIP project. (One was demolished, Eden Hospital in Castro Valley). Instrumentation of the three hospital buildings completed during FY13-14 is described in Section II. Ongoing maintenance was performed during FY13-14 on the 60 previously instrumented hospital buildings listed in Section III. Strong-motion records were obtained from several of these instrumented hospital buildings and their reference free-field sites during FY13-14, but most were of low level, as listed and highlighted in Section IV. All significant recordings can be viewed online and downloaded at **http://www.strongmotioncenter.org**. Records from most recent earthquakes, such as the M6.0 South Napa earthquake of August 24, 2014, can be accessed there. The fiscal status of the Agreement is reported in Section V.

TABLE 1

Regular Hospital Buildings
Instrumented under OSHPD/CSMIP Hospital Building Instrumentation Project (OSHPD Funded – HBSB Instrum. Comm. Recommended)

Hospital Name	CSMIP Sta. No.	OSHPD Approval No.	Year Built	No. of Stories	No. of Sensors	Installation Date
Instrumentation Underway						
1. San Jose – Santa Clara Valley Hospital (Replacement Bed Bldg. 1)						
	57537	IS 080219-43	ca. 2015	7/1	20+FF	FY14-15 est.
	Steel moment frames, with Side Plate connections					
(Includes reference free-field station:						
	San Jose – Santa Clara Valley Hospital Grounds, CSMIP Sta. 57xxx)					
1. San Francisco – UCSF Medical Center at Mission Bay (New Hospital)						
	58572	IS 080619-38	ca. 2015	6/0	18+FF	FY 14-15
	Steel buckling-restrained braced frames and moment frames					
(Includes reference free-field station:						
	San Francisco – UCSF Mission Bay Hospital Grounds, CSMIP Sta. 58xxx)					
3. Oakland – Kaiser Permanente Medical Center (New Replacement Hospital)						
	58nnn	IS 080551	2014	12/1	tbd	FY15-16
	Steel buckling-restrained braced frames and moment frames					

TABLE 2

New Hospital Buildings
Base-Isolated or Alternate Means of Compliance
(Owner-Funded with CSMIP Assistance and Guidance)

Hospital Name	CSMIP Sta. No.	OSHPD Approval No.	Year Built	No. of Stories	No. of Sensors	Installation Date
Completed during FY13-14						
1. San Francisco – General Hospital						
	58574	IS 071795	ca. 2015	7/2	24+FF	07/25/14
	Steel moment frames isolated with friction pendulum bearings (includes 4 relative displacement sensors)					
(Includes reference free-field station: **San Francisco – Marian & Palisade**, CSMIP Sta. 58575)						
Instrumentation Underway						
2. La Jolla – UCSD Jacobs Medical Center Bed Tower						
	03nnn	IL 092778-37	ca. 2016	10/2	24	tbd
	Steel moment frames above ground level and concrete shear walls below ground level (AMOC)					
3. Ventura – Community Memorial Hospital						
	25nnn	IS 082255-56	ca. 2015	6/1	15+2 arrays	tbd
	Steel concentrically-braced frames on CDSM improved ground					
(Includes one geotechnical array under the building and one geotech array outside the building)						
4. Stanford – New Stanford Hospital						
	58nnn	IS 081923-43	ca. 2017	7/1	36+FF	tbd
	Steel moment frames isolated with friction pendulum bearings at the base					
(Includes a reference free-field station)						
5. Stanford – Lucile Packard Children's Hospital						
	58nnn	IS 091547-43	ca. 2017	5/3	tbd	tbd
	Steel moment frames in the EW direction and steel BRB braced frames in the NS direction above First Level; Concrete shear walls below First Level (AMOC)					
6. Fremont – Washington Hospital						
	57nnn	HS 051385-01	ca. 2016	3/1	24+FF	tbd
	Steel moment frames isolated with friction pendulum bearings and viscous dampers					
(Includes a reference free-field station)						
7. San Francisco – Cathedral Hill Hospital						
	58nnn	IS 080885-38	ca. 2019	12/2	24	tbd
	Steel moment frames with viscous wall dampers					

TABLE 3

Existing Hospital Buildings
Voluntary Seismic Improvement (VSI) Projects
(Owner-Funded with CSMIP Assistance and Guidance)

Hospital Name	CSMIP Sta. No.	OSHPD Approval No.	Year Design	No. of Stories	No. of Sensors	Installation Date
Completed during FY13-14						
1. San Diego – Sharp Memorial Hospital (South Tower)						
	03546	HL 100694-37	1952	8/1	15+FF	07/22/2013
	Concrete shear walls (retrofit: add concrete shear walls and wrap columns)					
(Includes reference free-field station: **San Diego – I805 & Mesa College**, CSMIP Sta. 03544)						
2. Redlands – Community Hospital (Radiology Addition/Bldg. #7)						
	23548	HL 101386-36	1971	2/1	9+FF	07/17/2013
	Concrete shear walls (retrofit: add concrete shear walls)					
(Includes reference free-field station: **Redlands – Terracina & W Fern**, CSMIP Sta. 23547)						
Instrumentation Underway						
3. Santa Ana – Western Medical Center (Admin Bldg)						
	13xxx	HL 101526-30	1971	1/0	6+FF	tbd
	Steel x-braced frame (retrofit: replace steel x-braces)					
(Includes a reference free-field station)						
4. Los Angeles - Hollywood Presbyterian Medical Center (South Wing)						
	24xxx		1957	4/1	12+FF	tbd
	Concrete shear walls (retrofit: add concrete shear walls and wrap columns)					
(Includes a reference free-field station)						
5. Los Angeles - Hollywood Presbyterian Medical Center (Doctor's Tower)						
	24xxx		1971	10/2	15	tbd
	Concrete shear walls (retrofit: add concrete shear walls and wrap columns)					
6. Riverside – Community Hospital (Building B)						
	13xxx		1965	6/1	12+FF	tbd
	Concrete shear walls (retrofit: add concrete shear walls and FRP wrap columns)					

II. HOSPITAL INSTRUMENTATION DURING FY13-14

The hospital buildings instrumented during July 2013 through June 2014 include the San Francisco General Hospital (Trauma Center), the Sharp Memorial Hospital (South Tower) in San Diego, and the Redlands Community Hospital (Building 7/Radiology Addition). Reference free-field stations were also installed at the Sharp Memorial Hospital and Redlands Community Hospital. The building reference free-field at San Francisco General Hospital will be installed before the hospital opens in December 2015. The instrumentation systems of these three hospital buildings are described below:

General Hospital (Trauma Center), San Francisco – Appendix A

The new Trauma Center of the San Francisco General Hospital is a 9-story (7-story above ground and 2-story below) steel moment structure isolated and supported on 115 triple pendulum bearings. The building is scheduled to open in December 2015. The building is required to be instrumented as required by the California Building Code. The instrumentation plan was developed at a meeting between the design structural engineer and architect, OSHPD structural engineer and CSMIP staff on July 28, 2011. The instrumentation includes 20 accelerometers and 4 relative displacement sensors in the building plus 3 accelerometers at a reference free-field site. CSMIP provided the design architect with technical specifications for the instrumentation on December 12, 2011. The sensor locations and technical specifications were incorporated in the design plans which was approved by OSPHD on March 26, 2013. CSMIP staff performed the pre-installation sensor marking and survey of the building on May 2, 2013. The instrumentation was purchased by the owner according to CSMIP's specifications and installed by the contractor with CSMIP's guidance during construction. The instrumentation in the building was commissioned and accepted by CSMIP on July 25, 2014. The reference free-field station will be installed at a later date when the site is ready in 2015.

Documentation of the building and instrumentation is included in Appendix A of this report:

1) Photo of building	pg.	15
2) Sensor locations drawing		16
3) Building description		17

Sharp Memorial Hospital (South Tower), San Diego – Appendix B

The South Tower of the Sharp Memorial Hospital in San Diego is an 8-story concrete shear wall structure with a basement. The building was designed in 1952. The building was retrofitted under the voluntary seismic improvement (VSI) project. The retrofit was designed in according with the 2010 California Building Code in 2010 with "alternate means of compliance" and was required to be instrumented. The sensor locations were developed by the design structural engineer on June 30, 2010, and reviewed by OSHPD structural engineers and CSMIP staff. The instrumentation includes 15 sensors in the building and 3 at a free-field site south of the building. CSMIP developed a Technical Specification Letter for the instrumentation project and provided it to the design structural engineer on October 7, 2011. The instrumentation plans were approved by OSHPD on December 23, 2011. The instrumentation was purchased by the owner according to CSMIP's specifications and installed by the contractor with CSMIP's guidance during construction. The instrumentation was commissioned and accepted by CSMIP on July 22, 2013.

The building photos, the sensor locations, and the building description are included in Appendix B of this report:

1) Photo of buildings and reference free-field station pg. 19
2) Sensor locations drawing 20
3) Building description 21

Community Hospital (Radiology Addition/Building 7), Redlands – Appendix C

The 1971 Radiology Addition (Building 7) of the Redland Community Hospital is a 2-story concrete shear wall structure with a basement. The building was designed in 1971 and built in 1972. The building was retrofitted under the voluntary seismic improvement (VSI) project. The retrofit was designed in according with the 2010 California Building Code in 2011 with "alternate means of compliance" and was required to be instrumented. The sensor locations were developed at a conference call between the design structural engineer, OSHPD structural engineers and CSMIP staff on November 1, 2011. The instrumentation includes 9 sensors in the building and 3 at a free-field site northwest of the buildings. CSMIP developed a Technical Specification Letter for the instrumentation and provided it to the design structural engineer on November 18, 2011. The instrumentation plans were approved by OSHPD on December 20, 2011. CSMIP staff performed the pre-installation sensor marking and survey of the building on November 7, 2012. The instrumentation was purchased by the owner according to CSMIP's specifications and installed by the contractor with CSMIP's guidance during construction. The instrumentation was commissioned and accepted by CSMIP on July 17, 2013.

The building photos, the sensor locations, and the building description are included in Appendix C of this report:

1) Photo of buildings and reference free-field station pg. 23
2) Sensor locations drawing 24
3) Building description 25

III. HOSPITAL INSTRUMENTATION MAINTENANCE

During the period covered by this report, CSMIP technical staff performed periodic maintenance of the strong-motion instrumentation installed in the 60 previously-instrumented hospital buildings, 45 of which have an associated free-field instrument. With the addition of the three new instrumented hospitals, a total of 63 hospital buildings are instrumented and being maintained at of the start of FY14-15.

The 60 hospital buildings instrumented at the beginning of FY13-14 are listed alphabetically by city below (an asterisk indicates that the instrumentation at the facility includes a reference free-field station):

1. Alameda - Alameda Hospital *
2. Bakersfield - Kern County Hospital *
3. Berkeley - Alta Bates Hospital
4. Burlingame - Mills Peninsula Hospital *

5. Castro Valley - Sutter Eden Medical Center *
6. Colton - Arrowhead Regional Medical Center (base-isolated) *
7. Crescent City - Sutter Coast Hospital *
8. El Centro - El Centro Regional Medical Center *
9. Escondido - Palomar West Medical Center, Main Tower *
10. Escondido - Palomar West Medical Center, Central Plant
11. Eureka - St. Joseph Hospital *
12. Fairfield - North Bay Medical Center *
13. Fremont - Kaiser Hospital *
14. Gilroy - St. Louise Hospital *
15. Hemet - Hemet Valley Medical Center
16. Indio - JFK Memorial Hospital *
17. Irvine - Kaiser Sand Canyon Hospital *
18. King City - Mee Hospital *
19. La Jolla - Scripps Memorial Hospital *
20. La Jolla - UCSD Hospital *
21. Lancaster - Antelope Valley Hospital *
22. Los Angeles - Childrens Hospital
23. Los Angeles - Good Samaritan Hospital
24. Los Angeles - LAC+USC Hospital (D&T, base-isolated) *
25. Los Angeles - LAC+USC Hospital (Inpatient)
26. Los Angeles - MLK Hospital (base-isolated) *
27. Los Angeles - USC Hospital (base-isolated)
28. Los Angeles - USC Hospital Addition
29. Mammoth Lakes - Mammoth Hospital *
30. Moreno Valley - Riverside County Hospital *
31. Newport Beach - Hoag Hospital (West Tower) *
32. Newport Beach - Hoag Hospital East Tower (base-isolated)
33. Novato - Community Hospital *
34. Ontario - Kaiser Hospital *
35. Oxnard - St. John's Medical Center *
36. Palm Springs - Desert Hospital
37. Palmdale - Palmdale Regional Medical Center *
38. Salinas - Natividad Medical Center *
39. San Bernardino - San Bernardino Community Hospital
40. San Diego - UCSD Medical Center *
41. San Francisco - Kaiser Hospital
42. San Francisco - UCSF Hospital *
43. San Jose - O'Connor Hospital *
44. San Jose - Santa Clara Valley Hospital (Bldg K)
45. San Pedro - Providence Little Company of Lady Medical Center (Bldg. 1T)*
46. San Pedro - Providence Little Company of Lady Medical Center (Bldg. 2)
47. San Rafael - Marin General Hospital *
48. Santa Barbara - Cottage Hospital *
49. Santa Clara - Kaiser Hospital *
50. Santa Maria - Marian Hospital *

51. Santa Monica - St. John's Hospital (base-isolated) *
52. Santa Rosa - Kaiser Hospital *
53. Simi Valley - Simi Valley Hospital *
54. Stanford - University Hospital *
55. Sylmar - Olive View Hospital *
56. Templeton - Twin Cities Hospital *
57. Torrance - Providence Little Company of Lady Medical Center *
58. Valencia - Mayo Hospital *
59. Ventura - Ventura County Hospital *
60. Walnut Creek - Kaiser Hospital

The locations of these 60 hospital buildings plus the three hospital buildings instrumented this fiscal year are shown on the probabilistic seismic hazard map in Appendix D. Details on the structural systems of these hospital buildings are listed in the table in Appendix E.

In addition, CSMIP staff performed monitoring and data recovery for the code-type instrumentation systems (3 triaxial instruments) in the following four hospitals at CSMIP expense:

1. Los Angeles – White Memorial Hospital (7-story)
2. Pasadena – Huntington Memorial Hospital (7-story)
3. Downey – Kaiser Hospital (6-story)
4. Los Angeles – Kaiser LAMC Sunset Hospital (7-story)

IV. STRONG-MOTION RECORDS FROM HOSPITALS

During the period from July 1, 2013 to June 30, 2014 a total of eight earthquakes with magnitude 3.8 or larger were recorded at instrumented hospitals. The hospitals and the maximum accelerations recorded in the hospital building (base and structure) and at its reference free-field station (ground) if it exists, are listed below for these eight earthquakes.

M4.5 Humboldt Hill Earthquake of August 2, 2013

Name of Hospital	Type of Structure	Epicentral Distance (km)	Max. Horizontal Acceleration (%g)		
			Ground	Base	Structure
Eureka – St. Joseph Hospital	4-story concrete shear wall	22.1	0.015	0.011	0.034

M4.9 Bayview Earthquake of October 11, 2013

Name of Hospital	Type of Structure	Epicentral Distance (km)	Max. Horizontal Acceleration (%g)		
			Ground	Base	Structure
Eureka – St. Joseph Hospital	4-story concrete shear wall	55.0	0.034	0.018	0.063

M3.8 Mammoth Lakes Earthquake of October 21, 2013

Name of Hospital	Type of Structure	Epicentral Distance (km)	Max. Horizontal Acceleration (%g)		
			Ground	Base	Structure
Mammoth Lakes – Mammoth Hospital	1-story steel CBF frame	17.5	---	0.010	0.049

M4.1 Ferndale Earthquake of December 17, 2013

Name of Hospital	Type of Structure	Epicentral Distance (km)	Max. Horizontal Acceleration (%g)		
			Ground	Base	Structure
Eureka – St. Joseph Hospital	4-story concrete shear wall	35.4	0.007	0.006	0.031

M6.8 Ferndale Earthquake of March 9, 2014

Name of Hospital	Type of Structure	Epicentral Distance (km)	Max. Horizontal Acceleration (%g)		
			Ground	Base	Structure
Eureka – St. Joseph Hospital	4-story concrete shear wall	83.9	0.041	0.027	0.114
Crescent City - Sutter Coast Hospital	1-story steel CBF frame	131.2	0.013	0.014	0.021

M4.4 Encino Earthquake of March 17, 2014

Name of Hospital	Type of Structure	Epicentral Distance (km)	Max. Horizontal Acceleration (%g)		
			Ground	Base	Structure
Santa Monica – St. John's Hospital	5-story steel braced frame/concrete shear walls with isolation	11.6	---	0.107	0.135
Los Angeles – Good Samaritan Hospital	8-story concentrically-braced steel frame	22.2	No FF	0.015	0.039
Los Angeles – LAC+ USC Hospital (IP)	9-story eccentrically-braced steel frame	27.2	No FF	0.046	0.066
Los Angeles - USC Hospital Addition	9-story concentrically-braced steel frames	27.5	No FF	0.032	0.043
Los Angeles - USC Hospital	7-story steel braced frames with isolation	27.5	No FF	0.014	0.029
Simi Valley - Simi Valley Hospital	2-story steel moment frames	29.4	---	0.020	0.071
Pasadena – Huntington Hospital	7-story steel moment frames	30.6	No FF	0.011	0.027
Oxnard – St. John's Hospital	4-story steel moment frames	62.3	---	0.004	0.019

M5.1 La Habra Earthquake of March 28, 2014

Name of Hospital	Type of Structure	Epicentral Distance (km)	Max. Horizontal Acceleration (%g)		
			Ground	Base	Structure
Los Angeles – USC Hospital	7-story steel braced frames with isolation	30.0	No FF	0.011	0.052
Los Angeles – LAC+ USC Hospital (IP)	9-story eccentrically-braced steel frame	30.1	No FF	0.025	0.093
Ontario – Kaiser Hospital	5-story steel BRB frames	30.6	0.042	0.032	0.116
Newport Beach – Hoag Hospital East Tower	7-story steel moment frames with isolation	34.1	No FF	0.013	0.052

M4.1 Rowland Heights Earthquake of March 29, 2014

Name of Hospital	Type of Structure	Epicentral Distance (km)	Max. Horizontal Acceleration (%g)		
			Ground	Base	Structure
Los Angeles - USC Hospital Addition	9-story concentrically-braced steel frames	30.7	No FF	0.012	0.015
Los Angeles – LAC+ USC Hospital (IP)	9-story eccentrically-braced steel frame	30.9	No FF	0.020	0.033

The strong-motion records are available after an earthquake as part of the Internet Quick Reports at the web site of the Center for Engineering Strong Motion Data (CESMD) at **http://www.strongmotioncenter.org**.

The largest ground acceleration, 10.7% g, was recorded at the base of the 5-story base-isolated St. John's Hospital in Santa Monica, during the M4.4 Encino earthquake of March 17, 2014. The peak roof acceleration was 13.5% g. Figure 1 shows an interactive map with the locations of the earthquake epicenter and the stations that were near the earthquake. Records from a total of eight hospital buildings were obtained during this earthquake. Some of the acceleration records from this base-isolated structure are shown in Figure 2, and the displacement records are shown in Figure 3.

V. FISCAL REPORT

Expenditures and Department of Conservation billings to OSHPD are summarized in the following:

Total amount of Interagency Agreement (July 1, 2013 - June 30, 2016)		$798,900.00
1)	Budget for Year 1 (July 20130 - June 2014, FY 13/14)	$266,300.00
	Billed for Year 1	$189,500.00
	Remaining amount to be billed for Year 1	$76,800.00
2)	Budget for Year 2 (July 2014 – June 2015, FY 14/15)	$266,300.00
3)	Budget for Year 3 (July 2015 – June 2016, FY 15/16)	$266,300.00

The remaining amount for Year 1 will be expended when the hospital building at UCSF Mission Bay is instrumented in Year 2.

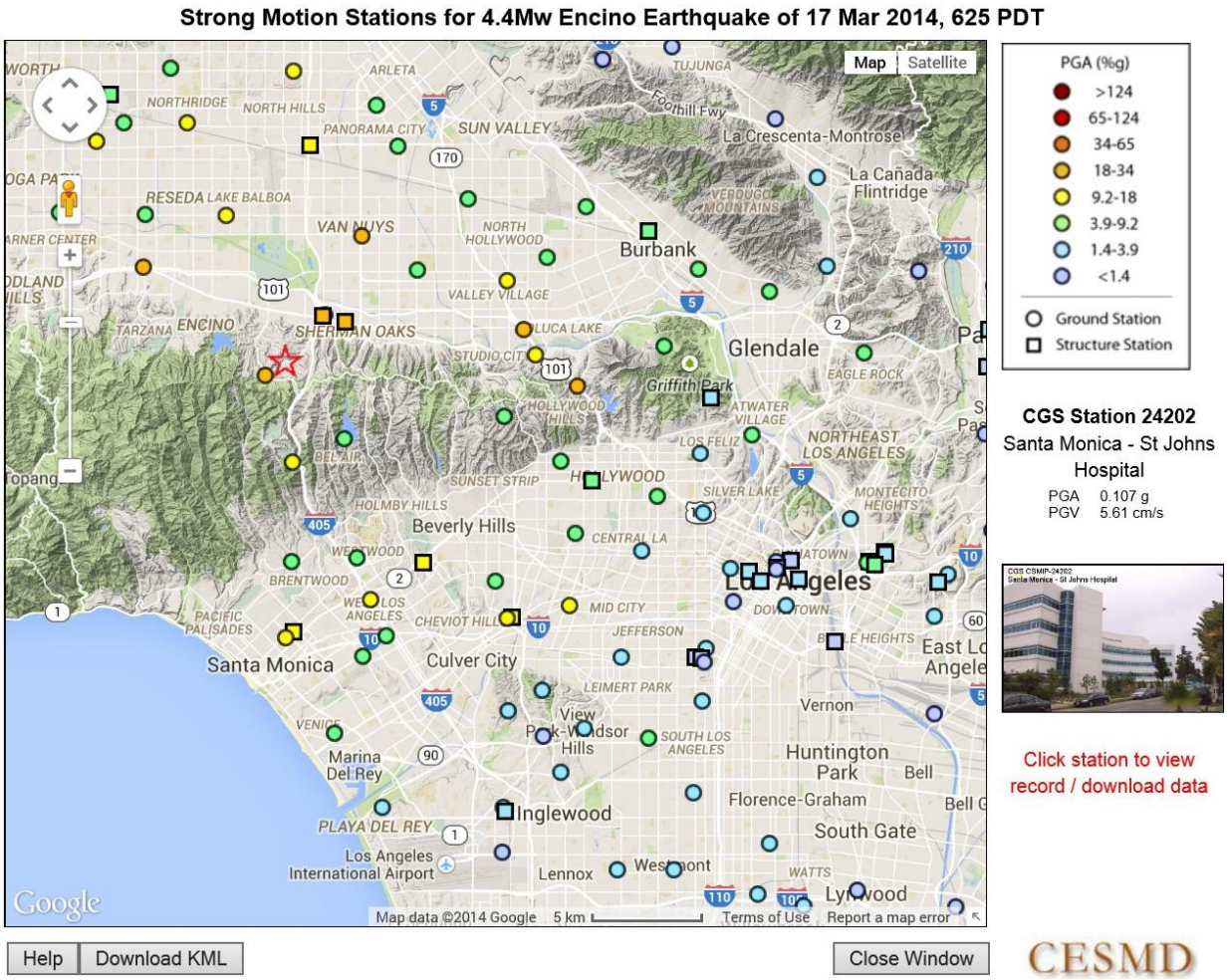

Figure 1. The interactive map at the CESMD, at **www.strongmotioncenter.org,** showing the location of the epicenter and of the strong-motion stations that recorded the M4.4 Encino earthquake of March 17, 2014. The colors of the dots or squares indicate the level of peak ground accelerations. The photo and recorded PGA and PGV at St. John's Hospital in Santa Monica are shown on the right side of the map by moving the mouse cursor over the square for the Hospital on the map.

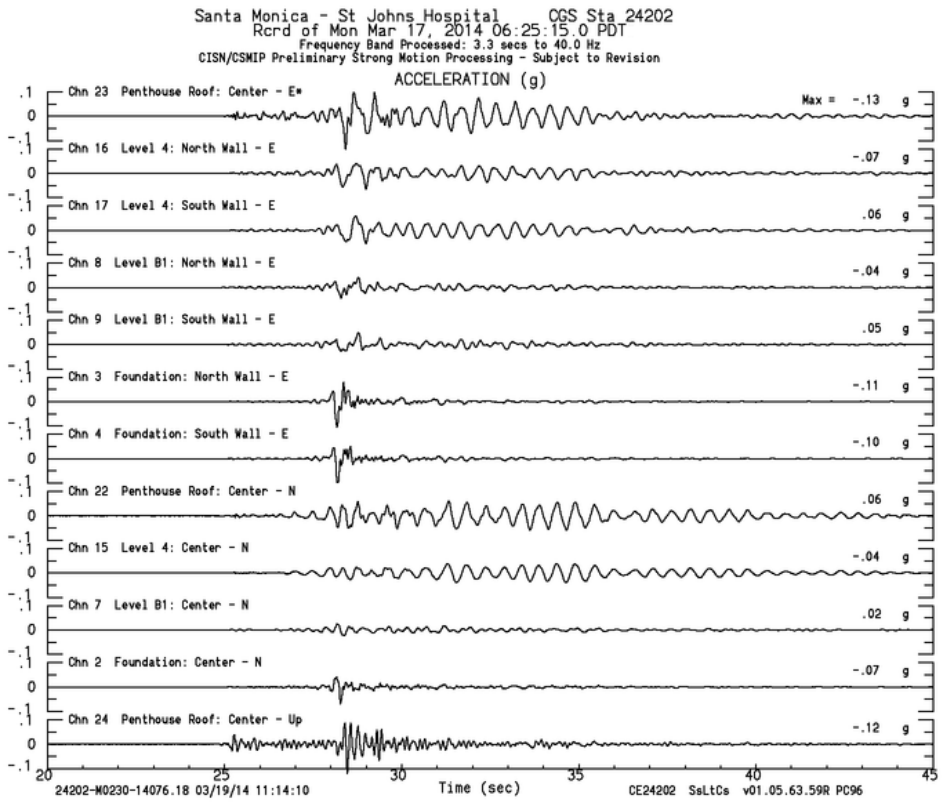

Figure 2. Acceleration records from the St. John's Hospital in Santa Monica during the 4.4 Encino earthquake of March 17, 2014. Reduction of accelerations from the foundation to Level B1 by the isolators can be seen from the record.

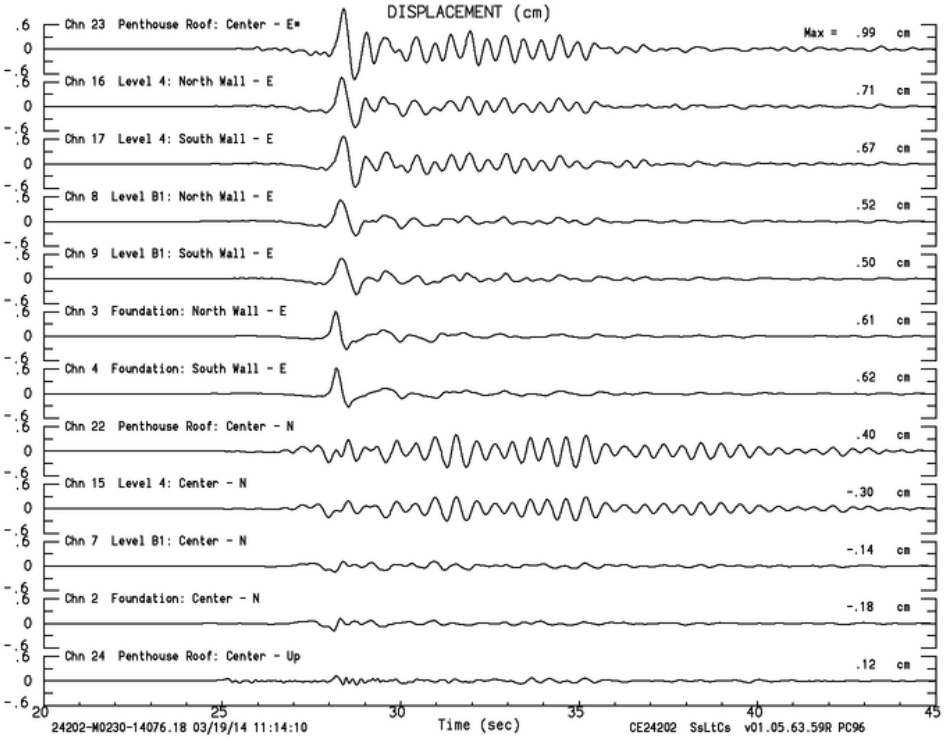

Figure 3. Displacement records corresponding to the acceleration records in Figure 2, from St. John's Hospital in Santa Monica during the M4.4 Encino earthquake of March 17, 2014.

Appendix A

Instrumentation

of

General Hospital

in

San Francisco

Station No. 58574 – Trauma Center
Station No. 58575 – Reference Free-Field

San Francisco – General Hospital (Trauma Center)
(CSMIP Station No. 58574)

Aerial view of the instrumented building (from **www.webcor.com**).
The instrument at free-field location will be installed in 2015.

View of west side of the instrumented building from Potrero Ave.
(from **www.sfexaminer.com**)

San Francisco - 7-story Hospital

(CSMIP Station No. 58574)

SENSOR LOCATIONS

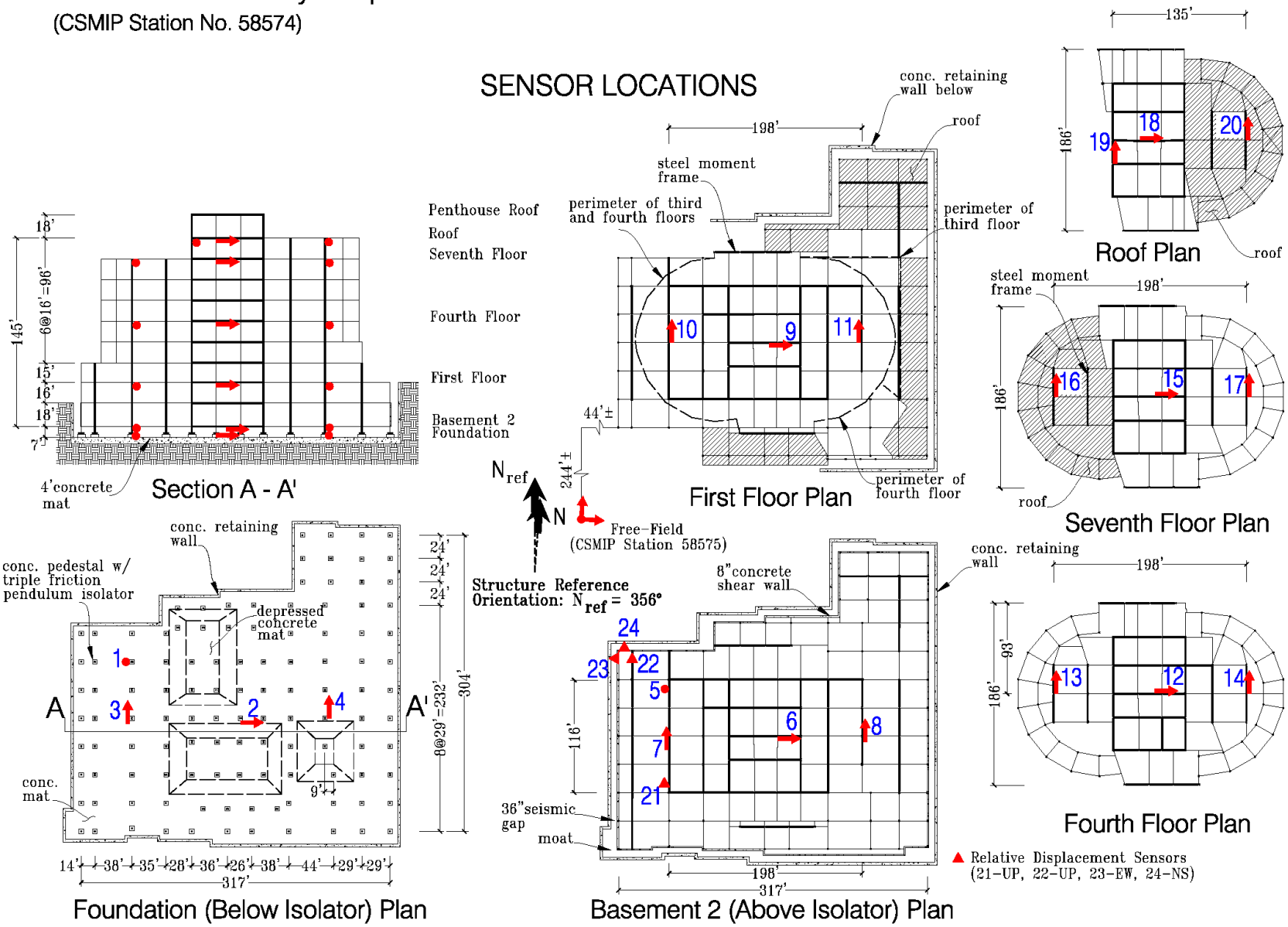

CSMIP
INSTRUMENTED BUILDING DESCRIPTION

Station Name : San Francisco – General Hospital **Station No:** 58574
Building Address : 1001 Potrero Ave, San Francisco, CA 94110 **Building Category (7/85):** Q2/28
Material Category: Steel

Coordinates: 37.7556°**N,** 122.4057°**W** **No. of stories above/below ground:** 7/2

Base plan shape: Rectangular (irregular) **Dimensions:** 320'x 230'

Typical floor shape: Elliptical **Dimensions:** 274'x 186'

Vertical load carrying system: (include floor decking system) 4.5" thick normal weight concrete fill over 3" steel deck at the First Floor and two basement floors and 3.25" thick light weight concrete fill over 3" steel deck at the upper floors and penthouse roof, supported by steel beams and columns. The steel structure is supported on 115 friction pendulum bearings.

Lateral force resisting system: (include element locations) Intermediate moment resisting steel frames with semi-rigid diaphragms at perimeter and interior locations at each level. Concrete shear walls at Basement 2 (lowest story). Steel ordinary concentric braced frames at the mechanical penthouse. The steel-framed structure is isolated and supported on 115 triple pendulum bearings (2 types with a maximum displacement capacity of 33 and 32.6 inches, respectively. R=88 inches, design period=3 seconds; 3-ft wide moat).

Foundation Type: 4 ft. thick concrete mat foundation; mat is thickened to 6 ft. at the elevator shaft. Concrete mat is sloped in some areas and has pedestals to support the bearings.

Unusual architectural features: The building has four interior open-air courtyards. The two on the east side of the building occur at the Fifth Floor, while the two on the west side of the building occur at the Third Floor. At the Seventh Floor the western side of the building is a courtyard and has no roof. A large mechanical penthouse above the roof level covers the central portion of the building. A pedestrian bridge and underground tunnel link the building to the adjacent Building 5.

Design date: 2010 (IS-071795) **Construction date:** 2010-2015

Design Engineer: (Name and Address) ARUP, 560 Mission St., Ste. 700, San Francisco, CA 94105

Architect: (Name and Address) Fong & Chan Architects, 1361 Bush Street, San Francisco, CA 94109

Geotechnical Engineer: (Name and Address) Treadwell & Rollo Inc., 555 Montgomery St., Ste. 1300, San Francisco, CA 94111

Site class: C (2007 CBC)

Remarks: The building was designed in accordance with the 2007 California Building Code. Funding for instrumentation was provided by the owner as required by OSHPD. CSMIP provided assistance in instrumentation.

AFS, Rev. 4/88

Appendix B

Instrumentation

of

Sharp Memorial Hospital
in

San Diego

Station No. 03546 – South Tower
Station No. 03544 – Reference Free-Field

San Diego – Sharp Memorial Hospital (South Tower)
(CSMIP Station No. 03546)

View of the instrumented building at Sharp Memorial Hospital.

San Diego – I805 & Mesa College
(CSMIP Station No. 03544)

View of the reference free-field site at Sharp Memorial Hospital.

San Diego - 8-story Hospital

(CSMIP Station No. 03546)

SENSOR LOCATIONS

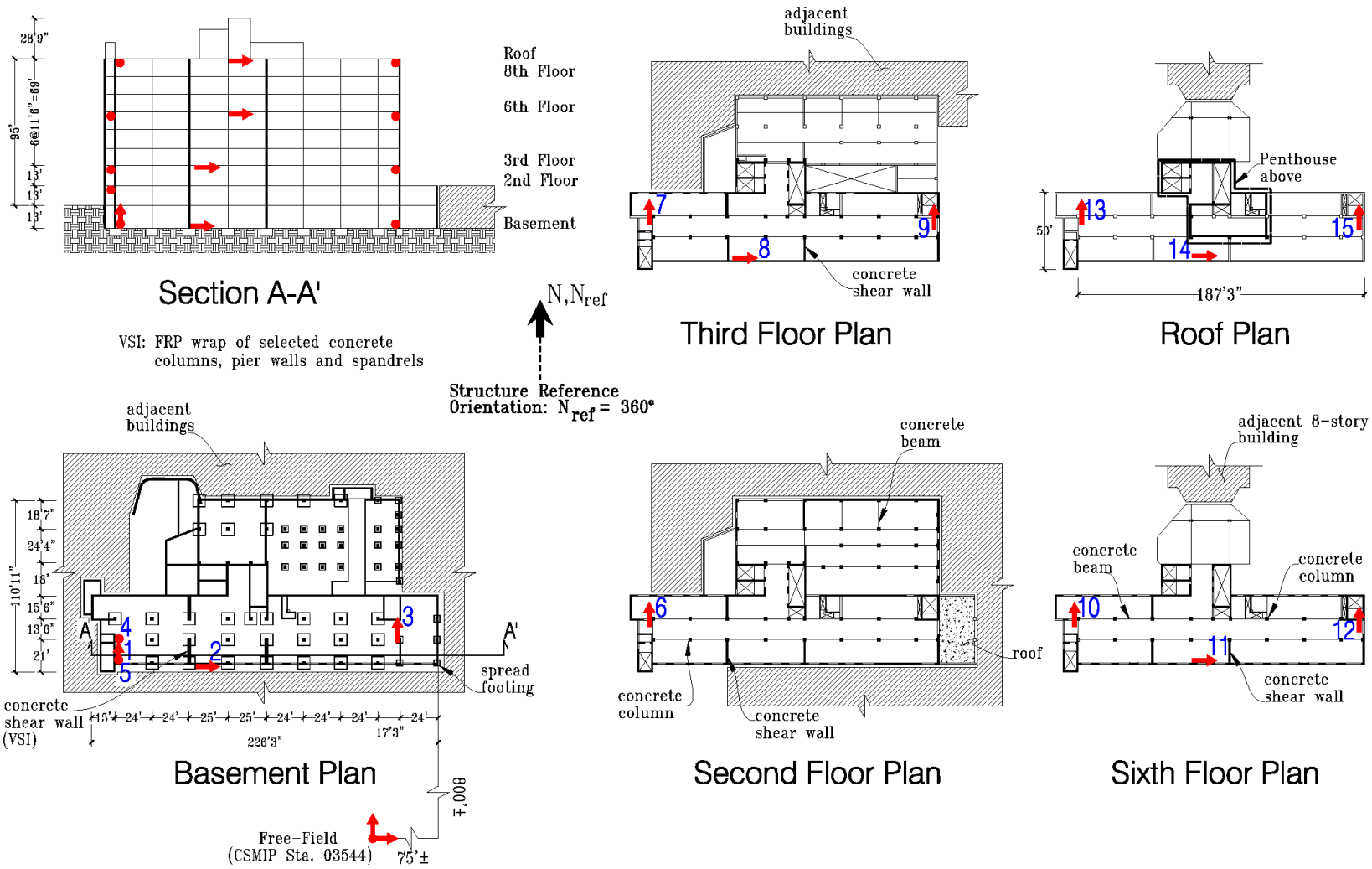

CSMIP
INSTRUMENTED BUILDING DESCRIPTION

Station Name : San Diego – Sharp Memorial Hospital **Station No:** 03546
Building Address : 7901 Frost Street, San Diego, CA 92123 **Building Category (7/85):** H3b/28
Material Category: concrete

Coordinates: 32.7992°**N,** 117.1546°**W** **No. of stories above/below ground:** 8/1

Base plan shape: Rectangular (irregular) **Dimensions:** 223'x 63'

Typical floor shape: Rectangular (irregular) **Dimensions:** 200'x 63'

Vertical load carrying system: (include floor decking system) Cast-in-place concrete flat slab supported by concrete beams, columns and walls at each level. Retrofit (2012): Strengthening of selected existing concrete spandrels, columns and piers with FRP wrap. Addition of new concrete infill walls.

Lateral force resisting system: (include element locations) Reinforced concrete shear walls at each level and in each direction. Concrete shear walls are located at both perimeter and interior locations. Retrofit (2012): Strengthening of select existing concrete spandrels, columns and piers with FRP wrap. Addition of new concrete infill walls.

Foundation Type: Continuous concrete footings at basement walls, and isolated concrete spread footings at interior columns. Retrofit (2012): Concrete footings added at new concrete infill wall locations.

Unusual architectural features: This building is encompassed on all sides by other multiple story hospital buildings and separated by seismic joints from each. Setback occurs at Third Floor level.

Design date: 1952, 2011 (retrofit) (HL 100694-37) **Construction date:** 1952, 2012 (retrofit)

Design Engineer: (Name and Address) KPFF (retrofit), 6080 Center Drive, Ste. 300, Los Angeles, CA 90045

Architect: (Name and Address) Childs Mascari Warner (retrofit), 1717 Kettner Blvd, Ste. 100, San Diego, CA 92101

Geotechnical Engineer: (Name and Address) Van Beveren & Butelo (retrofit), 706 West Broadway, Ste. 201, Glendale, CA 91204

Site class: C (2010 CBC, retrofit)

Remarks: The voluntary seismic improvement was designed in accordance with the 2010 California Building Code. Funding for instrumentation was provided by the owner as required by OSHPD. CSMIP provided assistance in instrumentation.

AFS, Rev. 4/88

Appendix C

Instrumentation

of

Community Hospital

in

Redlands

Station No. 23548 – Radiology Addition/Bldg #7
Station No. 23547 – Reference Free-Field

Redlands – Community Hospital
(CSMIP Station No. 23548)

View of the instrumented building at Redlands Community Hospital.

Redlands – Terracina & W Fern
(CSMIP Station No. 123547)

View of the reference free-field site at Redlands Community Hospital.

Redlands - 2-story Hospital

(CSMIP Station No. 23548)

SENSOR LOCATIONS

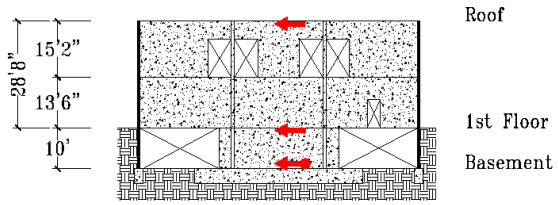

Section A - A'

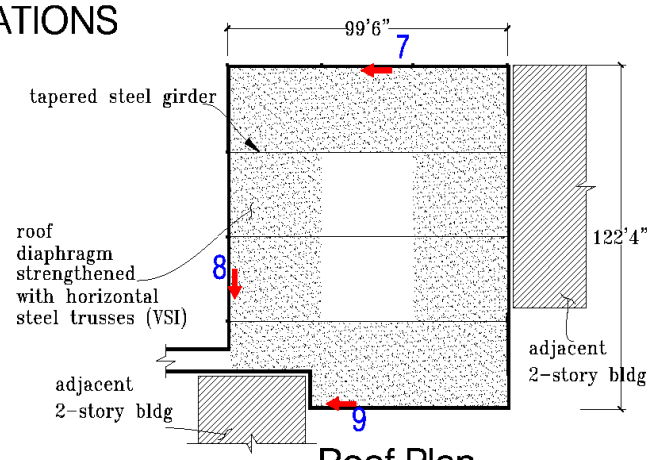

Roof Plan

N, N_{ref}

Structure Reference Orientation: N_{ref} = 360°

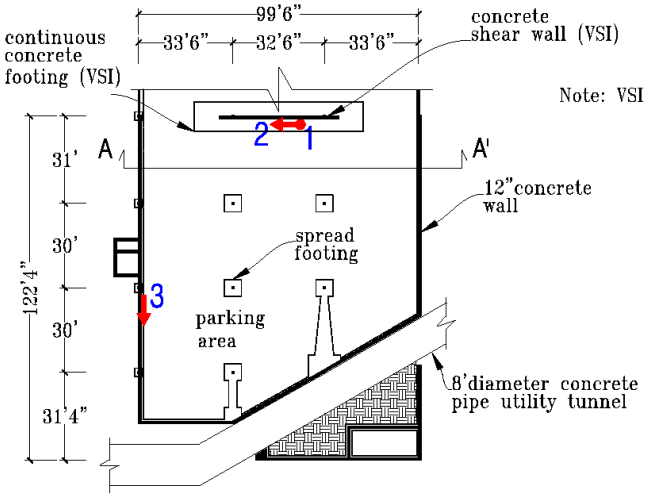

Basement Plan

Note: VSI – Voluntary Seismic Improvement

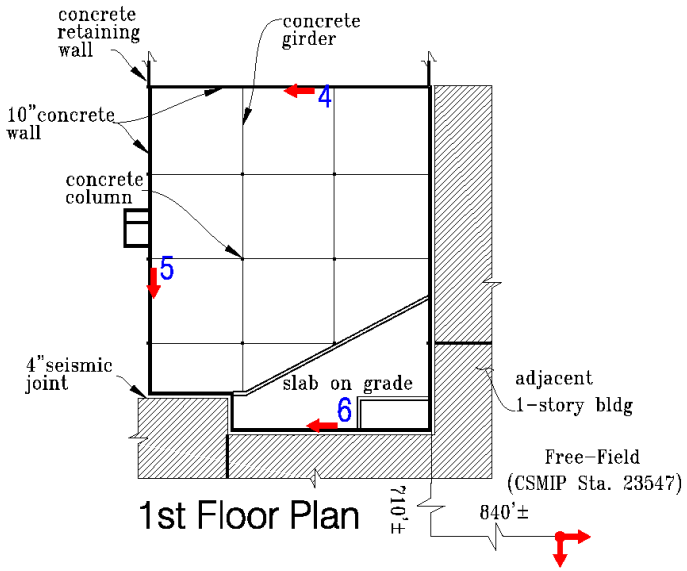

1st Floor Plan

CSMIP
INSTRUMENTED BUILDING DESCRIPTION

Station Name : Redlands – Community Hospital **Station No:** 23548
Building Address : 350 Terracina Blvd, Redlands, CA 92373-0742 **Building Category (7/85):** H1c/28
Material Category: Concrete

Coordinates: 34.0363°**N,** 117.2049°**W** **No. of stories above/below ground:** 2/1

Base plan shape: Rectangular **Dimensions:** 122'x 100'

Typical floor shape: Rectangular **Dimensions:** 122'x 100'

Vertical load carrying system: (include floor decking system) 1'-10" deep concrete pan joist and girder framing (6.5" thick slab at 1st Floor level, 1'-8" deep concrete pan joist and girder framing (4.5" thick slab) at 2nd Floor level, and 2.25" min. insulating concrete fill over steel deck supported by tapered steel girders (100-ft span) in the E-W direction with intermediate steel beams at Roof level. Each level is supported by concrete walls and columns.

Lateral force resisting system: (include element locations) Ordinary reinforced concrete shear walls at perimeter in both directions. Retrofit (2012): Addition of concrete shear wall at basement level, and strengthening of roof diaphragm with steel tubular trusses.

Foundation Type: Continuous concrete footings at perimeter walls and isolated concrete spread footings at interior columns. Retrofit (2012): Addition of concrete footing for new shear walls.

Unusual architectural features: There is an 8 ft. diameter concrete pipe utility tunnel that runs through the basement level of the building, but is separate from the basement. This building is encompassed on two sides by other hospital buildings and separated by seismic joints from each. No interior columns on the second floor

Design date: 1971, 2011 (retrofit) (HL-101386-36) **Construction date:** 1972, 2012 (retrofit)

Design Engineer: (Name and Address) KPFF (retrofit), 6080 Center Dr., Ste. 300, Los Angeles, CA 90045

Architect: (Name and Address) Lee, Burkhart, Liu, Inc. (retrofit), 13335 Maxella Avenue, Marina del Rey, CA 90292

Geotechnical Engineer: (Name and Address) C.H.J. Inc. (retrofit), 1355 E. Cooley Dr., Colton, CA 92324

Site class: D (2010 CBC, retrofit)

Remarks: The voluntary seismic improvement (VSI) of the 1971 Radiology Addition (Bldg 7) was designed in accordance with the 2010 California Building Code. Funding for instrumentation was provided by the owner as required by OSHPD. CSMIP provided assistance in instrumentation.

AFS, Rev. 4/88

Appendix D

Hospitals Instrumented by CSMIP/OSHPD

Probability of Apk > 0.2 g in 20 Years

Alluvial Soil Conditions

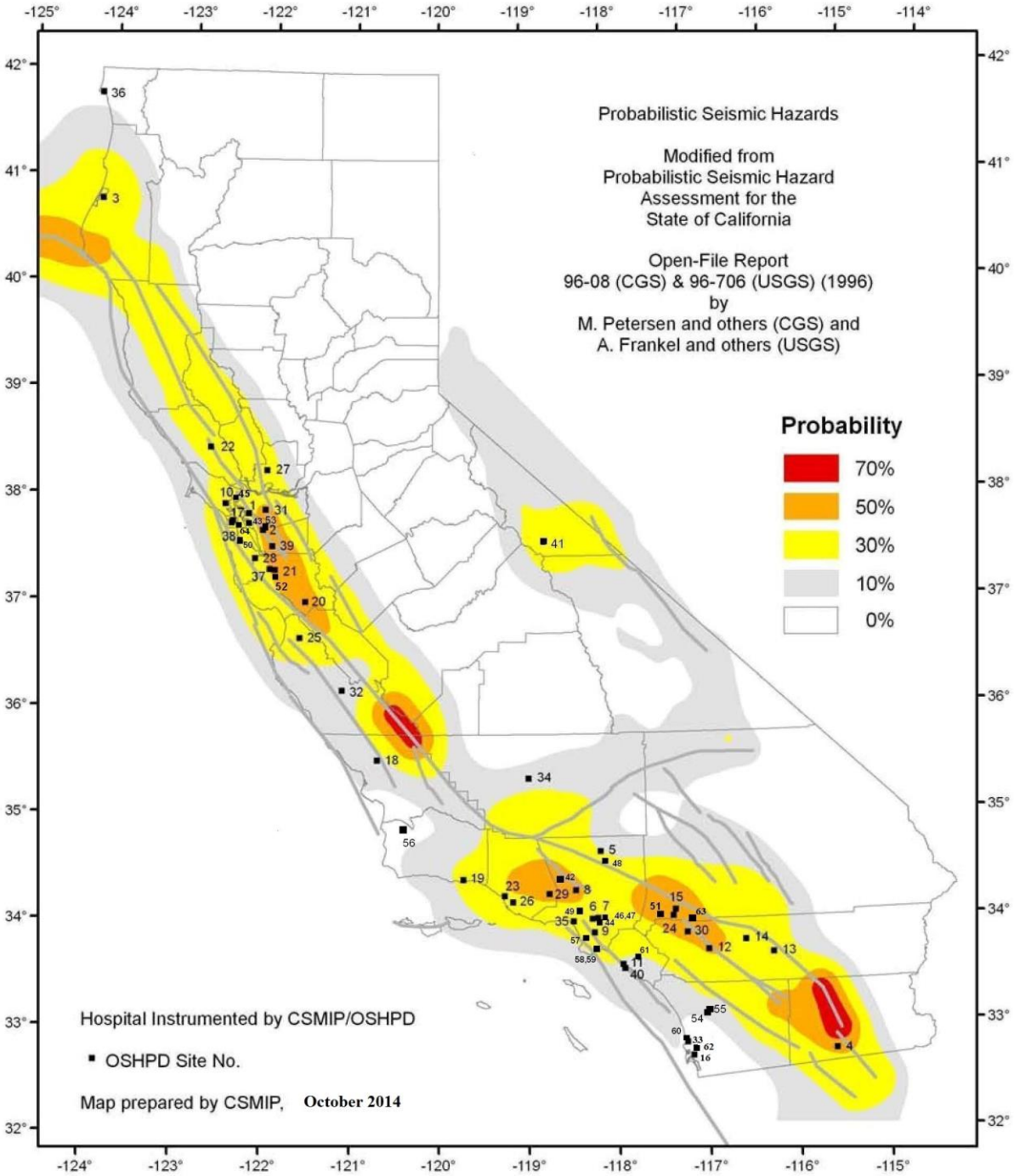

Appendix E

HOSPITAL BUILDINGS INSTRUMENTED BY CSMIP/OSHPD (as of 10/15/2014)

OSHPD Site #	CSMIP Sta. No.	Station Name	No. of Stories	FEMA-310 Bldg Type	SMIAC Bldg Type	No. of Sensors
1	58496	Berkeley - Alta Bates Hospital	2/1	S2L	I1c	12
2	58661	Castro Valley - Eden Hospital (demolished March 2013)	2/1	S1L	K1	11
3	89770	Eureka - St. Joseph Hospital	4/1	C2M	G2d	11+FF
4	01699	El Centro - Community Hospital	1/0	S2L	I1b	12+FF
5	24609	Lancaster - Antelope Valley Hospital	5/0	S1M	K2	12+FF
6	24713	Los Angeles - Good Samaritan Hospital	8/1	S2H	I3b	15
7	24605	Los Angeles - USC Hospital	7/1	IH	Q3	24
8	24514	Sylmar - Olive View Medical Center	6/0	UM	R	13+FF
9	14724	Los Angeles - MLK Hospital	5/1	IM	Q2	21+FF
10	58755	San Rafael - Marin General Hospital	5/1	S1M	J2b	12+FF
11	13589	Newport Beach - Hoag Hospital West Tower	11/0	C2H	H3a	18+FF
12	12267	Hemet - Valley Hospital	4/1	C2M	G2d	10
13	12759	Indio - JFK Hospital	1/0	W1	A1	8+FF
14	12299	Palm Springs - Desert Hospital	4/1	S1M	K2	13
15	23634	San Bernardino - Community Hospital	5/0	S1M	K2	12
16	03743	San Diego - UCSD Hospital	11/1	C1H	M3	12+FF
17	58718	San Francisco - Kaiser Hospital	6/0	C2M	H2d	18
18	36695	Templeton - Twin Cities Hospital	1/0	W1	A1	9+FF
19	25777	Santa Barbara - Cottage Hospital	3/1	C2L	H1e	9+FF
20	57200	Gilroy - St. Louise Hospital	2/0	S1L	K1	10+FF
21	57594	San Jose - O'Connor Hospital	5/0	S2M	I2c	16+FF
22	68669	Santa Rosa - Kaiser Hospital	4/1	S1M	K2	13+FF
23	25744	Ventura - County Hospital	4/1	C2M	H2b	12+FF
24	23788	Colton - San Bernardino Co. Med. Center	6/0,4/0,2/0	IM	Q2	27+FF
25	47796	Salinas - Natividad Medical Center	3/0	S2L	I1b	15+FF
26	25949	Oxnard - St. Johns Hospital	4/1	S1M	K2	18+FF
27	68032	Fairfield - NorthBay Medical Center	3/0	S2L	I1d	12+FF
28	58055	Stanford - University Hospital	3/1	S1L	K1	12+FF
29	24104	Simi Valley - Simi Valley Hospital	2/1	S1L	K1	12+FF
30	13213	Moreno Valley - Riverside County Hospital	3/1	S1L	K1	12+FF
31	58199	Walnut Creek - Kaiser Hospital	3/1	S1L	K1	16
32	47231	King City - Mee Hospital	2/0	S2L	I1c	10+FF
33	03233	La Jolla - UCSD Hospital	2/0	S1L	J1b	16+FF
34	34234	Bakersfield - Kern County Hospital	4/1	C2M	H2b	12+FF
35	24202	Santa Monica - St. John's Hospital	5/1	IM	Q2	18+FF
36	99261	Crescent City - Sutter Hospital	1/0	S2L	I1c	10+FF
37	57251	Santa Clara - Kaiser Hospital	3/1	S2L	I1b	18+FF
38	58257	San Francisco - UCSF Hospital	15/1	U	U	16+FF
39	57301	Fremont - Kaiser Hospital	2/0	S1L	K1	15+FF
40	13291	Newport Beach - Hoag Hospital East Tower	7/1	IM	Q3	27+FF
41	54331	Mammoth Lakes - Mammoth Hospital	1/0	S2L	I1b	10+FF
42	24344	Valencia - Mayo Hospital	2/partial	S1L	K1	12+FF
43	58396	Alameda - Alameda Hospital	3/0	S1L	K1	12+FF
44	24250	Los Angeles - LAC+USC Hospital D&T Bldg	6/0	IM	Q2	20+FF
45	68430	Novato - Community Hospital	2/0	S2L	I1b	12+FF
46	24260	Los Angeles - USC Hospital Addition	9/1	S2H	I3b	12
47	24248	Los Angeles - LAC+USC Hospital IP Bldg	9/0	S2H	I3b	12
48	24457	Palmdale - Palmdale Regional Hospital	5/0	C2M	H2d	16+FF
49	24397	Los Angeles - Childrens Hospital	7/1	S1M	K2	12
50	58390	Burlingame - Mills Peninsula Hospital	6/0	IM	Q2	27+FF
51	23416	Ontario - Kaiser Hospital	5/partial	S2M	I2b	18+FF
52	57495	San Jose - Santa Clara Valley Hospital (Bldg K)	4/1	S1M	K2	15
53	58494	Castro Valley - Sutter Eden Medical Center	6/1	S2M	I2a	19+FF
54	13473	Escondido - PMC West Hospital (Main Tower)	11/1	S1H	K3a	12+FF
55	13476	Escondido - PMC West Hospital Central Plant	2/0	C2L	H1f	6
56	26470	Santa Maria - Marian Hospital	4/partial	S2M	I2c	12+FF
57	14529	Torrance - Providence Little Company of Mary MC(VSI)	4/2	C2M	H2d	21+FF
58	14535	San Pedro - PLCOM MC (Bldg 1T; VSI)	5/partial	S2M	I2d	12+FF
59	14536	San Pedro - PLCOM MC (Bldg 02, VSI))	4/1	C2M	H2d	12
60	03538	La Jolla - Scripps Memorial Hospital (VSI)	7/1	S1M	J2b	12+FF
61	13439	Irvine - Kaiser Sand Canyon Hospital	6/partial	S2M	I2b	15+FF
62	03546	San Diego - Sharp Memorial Hospital (VSI)	8/1	C2H	H3b	15+FF
63	23548	Redlands - Community Hospital (VSI)	2/1	C2L	H1c	9+FF
64	58574	San Francisco - General Hospital	7/2	IM	Q2	24+FF

This page left intentionally blank.

10/17/2013

CANDIDATE HOSPITAL BUILDINGS FOR OSHPD SUPPLIED INSTRUMENTATION

Priority	Hospital Name	City	Zip	County	Building Name	OSHPD App. No.	Bldg Permit	Field Accepted	CBC Year	ASCE 31 Building Type	Vertical Frame	Lateral System	Abv/Bel Stories	Ft Print Dimensions	Found. Type	Remarks	Fac No
1	Santa Clara Valley Medical Center	San Jose	95128	Santa Clara	Bed Building one	IS080219			2007	S1	Steel	SMRF	7/0		Drilled Piers		10935
2	Kaiser Oakland Replacement	Oakland	94611	Alameda	Main Building Replace	IS080551	8/17/2009		2007	S2M	Steel	BRBF & LFRS	12/1	320 X 230			11296
3	UCSF Medical Center	San Francisco	94158	San Francisco	UCSF Medical Center	IS080619			2007	S2M	Steel	BRBF	6/0		Drilled Piers		18181
4	Miller Children's Hospital	Long Beach	90801	Los Angeles	Pediatric Inpatient Add.	IL050398		Dec-09	2001	S2M	Steel	SMRF	4/0		Mat		17562
5	SW Healthcare System - Murrieta	Murrieta	92362	Riverside	Women's Center & ER	HS030959	3/20/2006	10/8/2009	1998	C2	Conc.	Conc-DMRF	2/0	126 X 310			16681
6	Presbyterian Int. Comm.	Whittier	90602	Los Angeles	Ed Shannon Tower	HL000304		6/9/2005	1998	S2M	Steel	SMRF	4/1	275 X 350			11968
7		Loma Linda															
8	Alta Bates Hospital	Berkeley	94705		1985 Buildings				1979							FF ONLY	11214
9	Hamet Valley Medical Cenrer	Hemet	92543		Tower 1				1964							FF ONLY	10541
10	San Bernardino Community Hos.	San Branerdino	92411		North Hospital				1985							FF ONLY	10697
11																	

= Instrumentation Plan is Approved by OSHPD/CSMIP

CANDIDATE HOSPITAL BUILDINGS FOR OWNER SUPPLIED INSTRUMENTATION

Priority	Hospital Name	City	Zip	County	Building Name	OSHPD App. No.	Bldg Permit	Field Accepted	CBC Year	ASCE 31 Building Type	Vertical Frame	Lateral System	Abv/Bel Stories	Ft Print Dimensions	Found. Type	Remarks	Fac No
1	Washington Hospital	Fremont	94538	Alameda	CC / ER Building	HS051385			2001	IM	Steel	@-ST Braced Frame	3/1	160 X 350		@=Pendulum Base Isolated	11366
2	Calif. Center for Healthcare	San Jose	95101	Santa Clara	Main Building	IS070505			2001	S2M	Steel	BRBF	??	??			18174
3	San Francisco General	San Francisco	64110	San Francisco	Main Building	IS071795	7/1/2010		2007	S1H	Steel	@-SMRF	7/2			@=Pendulum Base Isolated	12463
4	CPMC Cathedral Hill	San Francisco	94109	San Francisco	Main Building	IS080885			2007			@-SMRF				@=Viscous Wall Dampers	18165
5	New Stanford Hospital	Palo Alto	94305	Santa Clara	Main Building	IS-081923-43			2007			@-SMRF	7/1			@=Pendulum Base Isolated	10943
6	Century City Hospital	Los Angeles	90067	Los Angles		IL101930			1972	S1	Steel	SMRF	8/0	435'x157'	Shallow		12874
7	Sharp Memorial Hospital	San Diego	92123	San Diego	South Tower	HL-100694-37			1952	C2	Conc	Conc-SW	8/1		Shallow		12364
8	Community Memorial Hospital	Ventura	93303	Ventura	Hospital Building	HS-082255-56			2010	S2	Steel	SCBF	6/1	440'x110'	Mat		11159
9	Lathrop PARC	Redwood City	94063	San Mateo	PARC	HS091689			2007	S1	Steel	@-SIMRF	5/0		Mat	@=Lead Rubber Base Isolated	28203
10	Lucile Packard Children's Hospital	Palo Alto	94304	Santa Clara	LPCH Expansion	IS091547			2007	S1	Steel	SMRF/BRBF	6/1		Pile		16477
11	Western Medical Center	Santa Ana	92705	Santa Ana	Bldg. 4	HL-101526-30			1967	S1	Steel	BF	1/0		Shallow		18007
12	Barlow Respiratory Hospital	Los Angeles	90026	Los Angles	Hospital Building	IL-082945-19A			2007	S1	Steel	SMRF	3/0		Shallow	SidePlate Connection	11417
13	UCSD Jacobs Medical Center	La Jolla	92037	San Diego	Bed Tower	IL-092778-37			2007	S1	Steel	SMRf	10/2		Shallow	SidePlate Connection	11659
14	Hollywood Presbyterian Med. Ctr.	Los Angeles	90027	Los Angles	South Wing	P-2011-00626			1957	C1	Conc	SW	4/1		Shallow		11722
15	Hollywood Presbyterian Med. Ctr.	Los Angeles	90027	Los Angles	Doctor's Tower	P-2011-00625			1971	C1	Conc	SW	10/2		Shallow		11722
16																	
17																	
18																	

= Instrumentation Plan is Approved by OSHPD/CSMIP

= Buildings mounted on seismic isolation systems or using a unique design not covered by CBC to be instrumented by owner.

Fac No	Supplier
18152	OSHPD
17672	OSHPD
16681	OSHPD
18141	OSHPD
11968	OSHPD
18167	OSHPD
11296	OSHPD
12006	Owner
10804	Owner
17905	Owner
11366	Owner
18174	Owner
18173	Owner
18173	Owner
10838	Owner
12463	Owner
18165	Owner
10943	Owner

Hospitals Instrumented by CSMIP/OSHPD

Probability of Apk > 0.2 g in 20 years

Alluvial Soil Conditions

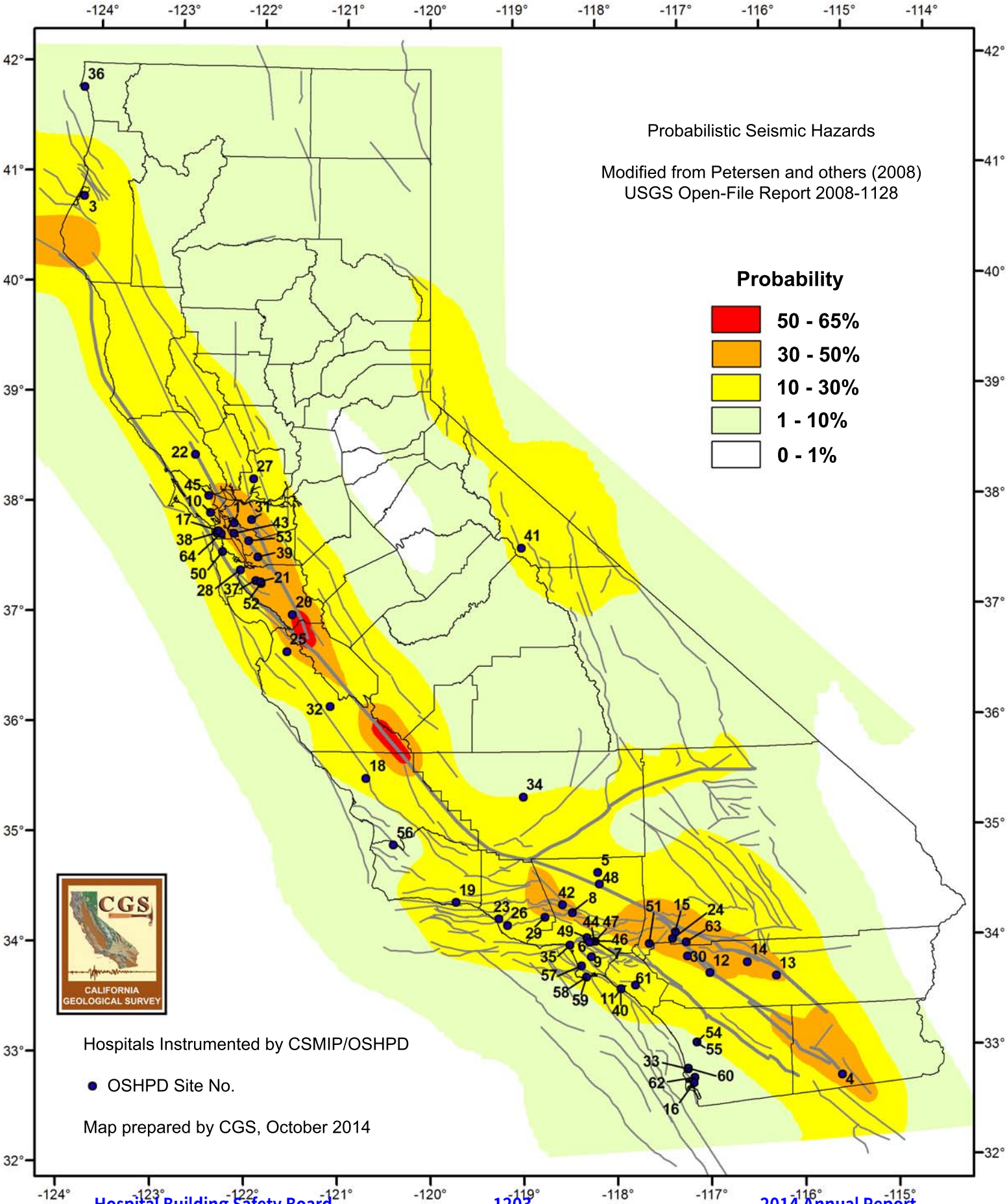

This page left intentionally blank.

OSHPD Office of Statewide Health Planning and Development

Hospital Building Safety Board
400 R Street, Suite 200
Sacramento, California 95811-6213
(916) 440-8453
Fax (916) 324-9118
www.oshpd.ca.gov/Boards/HBSB/index.html

HOSPITAL BUILDING SAFETY BOARD
Instrumentation Committee

Wednesday, October 29, 2014
10:00 a.m. - 4:00 p.m.

Office of Statewide Health Planning and Development
400 R Street, Suite 452
Sacramento, CA 95811
(916) 440-8453

and

Metropolitan Water District Headquarters
700 N. Alameda Street, Suite 2-546
Los Angeles, CA 90012
(213) 897-0166

Committee Members Present
Lou Gilpin, Chair
John Egan, Vice-Chair
Rami Elhassan
Trailer Martin
Simin Naaseh
Moh Huang, Consulting Member
Tony Shakal, Consulting Member

OSHPD Staff
Paul Coleman, Deputy Director
Hussain Bhatia
Glenn Gall
Roy Lobo
Chris Tokas
Elizabeth Wied

HBSB Staff
Linda Janssen, Executive Director
Cathy Kane
Evett Torres

1 **1. Welcome and Introductions**

2 Committee Chair Lou Gilpin opened the meeting and reviewed the agenda.

3

2. Review the October 29, 2013 Meeting Report

There were no comments on the October 29, 2013 meeting report.

3. Reports and Briefings

- **OSHPD Briefing**
    - **C. Tokas and R. Lobo, OSHPD**

Mr. Lobo gave a presentation for the committee.

He reviewed the 2013-2016 OSHPD/California Geological Survey (CGS) contract. The three-year total contract is for just under $800,000. For FY 2013-14 only $189,600 has been spent; the balance, $609,400, will be spent on UCSF Mission Bay.

The three completed hospital buildings for this FY are San Francisco General–New Trauma Center; Sharp Memorial Hospital–South Tower; and Community Hospital of Redlands–Radiology addition.

Mr. Lobo reviewed the instrumentation references in the 2013 California Building Code (CBC) as well as OSHPD's instrumentation requirements and recommendations.

He displayed a map of the 58 hospitals in California that are currently instrumented.

He explained the common seismic resistant systems requiring design criteria for OSHPD approval, then other criteria for HBSB instrumentation selection.

He listed the buildings with owner-paid instrumentation and possible candidates for instrumentation. The group discussed the Loma Linda University Medical Center – it has a quadruple pendulum bearing system, and there are three structures on the common base.

- **Annual Report – OSHPD/California Strong Motion Instrumentation Program (CSMIP) Hospital Instrumentation Project**
    - **M. Huang**

Mr. Shakal and Mr. Huang reviewed the Annual Report with the committee.

Mr. Shakal stated that last year they finished the San Francisco General Trauma Center, as well as two Voluntary Seismic Improvement (VSI) projects.

The OSHPD-funded instrumentation of the Santa Clara Valley Hospital's Replacement Bed Building has been significantly affected by delays. In addition, the UCSF Hospital at Mission Bay instrumentation has recently been affected by union delays.

Thirteen owner-paid instrumentation projects were completed or are underway during FY 13-14: seven new buildings and six existing buildings. A five-step procedure is now in place which Mr. Shakal explained as follows.

1. Determination of effective sensor locations after study of structural plans.
2. Development of an instrumentation plan.
3. Development of a detailed technical design for the system called the Technical Specification Letter.

4. An on-site field visit to mark sensor locations.
5. On-site testing and acceptance.

Mr. Tokas asked about San Francisco General; Mr. Huang stated that the inside of the building is done. Displacement sensors are installed.

Mr. Shakal explained the three tables listing the instrumentation projects completed and underway.

Mr. Huang described the progress of the Cathedral Hill project in Table 2. Currently they are waiting for the instrumentation plan to come back so OSHPD can approve it. Mr. Bhatia stated that the general location has been agreed upon. Mr. Huang noted that the structure is steel moment frames with viscous wall dampers – the first of its kind in the country.

Mr. Huang stated that the framing of the Lucile Packard Children's Hospital is almost all the way up. A meeting will be scheduled to determine the location of the sensors. Mr. Shakal said that the hospital was almost topping out before they began to think about instruments; what can be done differently next time? Mr. Tokas responded that the minute OSHPD issues approval, there is a step that should come in; in this case someone had not followed up on the design side and the process had to be jump-started.

Ms. Naaseh noted that this one was mandated because of the Alternate Means of Compliance. We have the buckling-restrained braces (BRBs) at UCSF and Kaiser – this is another BRB in at least one direction. What was the Alternate Means of Compliance for? Mr. Tokas replied that there are many factors, including the 12 stories; it is a challenging building.

Mr. Tokas stated that the VSI projects in Table 3 are winding down – VSIs will no longer trigger the requirement (unless the VSI includes some kind of Alternate Method of Compliance).

Mr. Huang described the progress of the San Francisco General Hospital and Sharp Memorial Hospital projects.

Ms. Naaseh asked about developments in displacement measuring: is there a way to measure actual drift as opposed to back-calculating from measured accelerations? Mr. Shakal responded that at San Francisco General they are measuring actual small displacement with the sensors, to a hundredth of an inch. The committee discussed drift measurement.

Mr. Huang referred to the “Strong-Motion Records from Hospitals” for the last fiscal year, in particular the M4.4 Encino Earthquake on March 17 and the M5.1 La Habra Earthquake on March 28. The strong-motion records are available at the Center for Engineering Strong Motion Data website.

Mr. Huang referred to an interactive map available at the same website, showing the location of the epicenter and the strong-motion stations that recorded the Encino earthquake. Mr. Shakal added that it is a cooperative data center between the Applied Technology Council (ATC) and the United States Geological Survey (USGS). The map is an increasingly useful tool.

Mr. Huang explained the Acceleration and Displacement Records for St. John's Hospital in Santa Monica during the Encino earthquake.

Mr. Huang and Mr. Shakal explained the coordination between the map entitled "Hospitals Instrumented by CSMIP/OSHPD" (Appendix D) and the list entitled "Hospital Buildings Instrumented by CSMIP/OSHPD" (Appendix E).

Mr. Gilpin stated that last year, the committee had discussed updating the 1996 shake hazard map for the hospital-plotting exercise. Tim McCrink of the CGS had accomplished the update. He presented the map. The substantial changes he saw were that some of the high probability zones – the red areas from the 1996 model, now on the 2008 ground motion model – are more subdued. At the same time, some of the medium probability areas have increased in size (for example, the Lake Tahoe area).

- **Review of any newly proposed candidate hospital buildings to add to the current candidate list:**
    - **D. Jephcott**

Mr. Gilpin directed the committee to the Candidate Hospital Buildings table. He stated that the hospitals Mr. Jephcott had recommended for upgrades on the OSHPD-supplied list were Miller Children's Hospital in Long Beach and Whittier Presbyterian Hospital. Mr. Huang stated that Oakland Kaiser was already in process; they could try to obtain permission to move something into this year.

The committee decided to switch SW Healthcare System – Murrieta (#5 on the list) with Whittier Presbyterian Hospital (#6).

Mr. Gilpin asked about a hospital in the Fairfield area, the location of the Green Valley fault – was there any instrumentation there? Mr. Tokas stated that OSHPD has been staying away from that area, but since the Napa earthquake the Bay Area probabilities are going to be recalculated; maybe it should be revisited. Mr. Gilpin suggested adding the hospital to the list. Tim McCrink said that the USGS is now looking at the pressure transfer to the Green Valley fault.

Mr. Gilpin stated that Mr. Egan had looked up the Newport Inglewood fault, and it runs within the Miller Children's Hospital campus.

Mr. Gilpin also proposed adding the North Bay Medical Center (addressing Fairfield) as #11 on the list. Mr. Huang observed that it was already #27 on the map of instrumented hospitals.

Mr. Gilpin moved to the list of Owner-Supplied Instrumentation. Mr. Huang pointed out that the list is in no particular order – it just depends on the phase of construction. Mr. Tokas stated that the hospitals of high importance are the OSHPD-instrumented ones – the priorities affect money allocation.

- **Review candidate hospital building documentation**

The committee established that this agenda item was a carryover from a couple of years ago. Currently the committee has an MOU and a process in place.

MOTION: (M/S/C/) [Martin/Egan]

The committee voted unanimously to switch the positions of hospitals #5 and #6 on the list of OSHPD-Supplied Instrumentation.

At Ms. Gilpin's request, Mr. Shakal provided background information on the Early Warning System.

- It is in pilot mode.
- Its origin of development is Berkeley and CalTech.
- California earthquakes are "underfoot" – they occur where the cities are, and not much warning time is possible.
- The Napa earthquake provided the first real test of a 5-second warning at Berkeley, 10 seconds in San Francisco, and longer in San Jose.
- The network's focused areas are around the Bay Area and Pasadena. The next step is to expand the number of stations outward – a station must be near where the fault is rupturing.

- The goal is to put the system in place and develop ways to use a very short warning time effectively.
- The federal government is stepping up: members of Congress have sent a letter to the President, requesting that $16.1 million be added to this year's budget. It would be a five-year package.
- The system imports several technologies including one from Japan.
- Three systems are competing to see which operates best. The Napa earthquake was a good test.

Mr. Gilpin asked if hospitals could be candidate sites. Mr. Shakal replied that the free fields could conceivably be part of a sensing system that would feed into the system.

Mr. Tokas addressed the two different types of networks, public and private, that the host can use in order to take advantage of the benefits of the Early Warning System. The public network has all kinds of other problems, while the private network has high reliability – but what instruments are going to be incorporated onto it? Mr. Shakal replied that a company in Southern California says they can do it without any other networks. They use sensors directly on fire stations. That methodology is different from a system that recognizes an earthquake coming at a distance by measuring the difference between the speeds of the p wave and the s wave.

Mr. Egan asked if there has been any examination of the amount of warning time that is effective for people to be able to respond. Mr. Shakal replied that it is actively being

looked at; they are separating the response into those things that can be done automatically and those that require human action.

Mr. Shakal mentioned that BART was an early adopter of the system – they have tapped into the signal coming from Berkeley. The speed of the trains reduces automatically, then humans intercede and decide whether to stop the trains.

Mr. Coleman and Mr. Tokas had recently attended a hearing on Early Warning Systems. Mr. Coleman commented that the purpose of the hearing was actually to determine sources of funding. The hearing had three different panels: Health Care, BART/Public Transportation, and Utilities (electrical, water, and gas).

As a member of the Health Care panel, Mr. Coleman had covered the advantages of Early Warning Systems for hospitals.

- Postponement of elective surgical procedures.
- Shutoff of MRIs and other highly sensitive medical equipment.
- Time to brace patients and remove instruments, especially robotic and laser.
- Elimination of the 10-second delay for the essential electrical system.
- Maintaining pressure relationships and differentials for infection control.
- Elevators could return to the first floor ahead of time.
- Integration of mechanical and other electrical systems, for example, shutting off the gas valves.

Disadvantages of the system:

- Panic and overreaction.
- False alarms may make the system untrustworthy.
- The warning time may still not be adequate for many beneficial preventive steps.
- Cost may be a problem for hospitals, particularly as they are trying to comply with seismic deadlines and safety requirements.

Mr. Coleman continued that the Office of Emergency Services (OES) had stated that the Early Warning System would have 100% reliability, by saturating the state with over 300 sensors. Mr. Coleman felt that the reliability of the system was going to be important for it to be effective.

He had posed the questions, “Can the free field stations at the hospitals be converted or modified in such a way that they could actually become a part of the Earthquake Early Warning System? If so, would OSHPD have to pick up the cost for those stations it has paid for, installed, and currently maintains?”

Mr. Egan commented on two aspects the hospitals would need: having the instrumentation there, and then being linked in to the network so they can receive a warning signal and respond.

Carl Scheuerman from Sutter Health commented that their operators do not understand or see any results from the instruments. The operators need to understand what happened to their buildings following the generation of the data.

Mr. Bhatia said that there are ways of actively monitoring the instruments at the hospital – but that means extra cost for the hospitals.

Mr. Elhassan asked if the Early Warning System signal also carries the intensity of the data coming in. Mr. Tokas responded that it does carry a prediction of the intensity, although it may not be totally accurate. Mr. Bhatia added that the demonstrations they had seen involved an app on a phone; the signal told the magnitude of the earthquake and the predicted level of shaking at the site of the phone.

4. Selection and Prioritization of New Hospital Buildings for Instrumentation, 2014-2015 Fiscal Year

(Covered in #3 above; updated priority table below)

Candidate Hospital Buildings for OSHPD-Supplied Instrumentation

Priority	Hospital Name	City	Zip	County
1	Santa Clara Valley Medical Center	San Jose	95128	Santa Clara
2	Kaiser Oakland Replacement	Oakland	94611	Alameda
3	UCSF Medical Center	San Francisco	94158	San Francisco
4	Miller Children's Hospital	Long Beach	90801	Los Angeles
5	Presbyterian Int. Comm.	Whittier	90602	Los Angeles
6	SW Healthcare System - Murrieta	Murrieta	92362	Riverside
7		Loma Linda		
8	Alta Bates Hospital	Berkeley	94705	
9	Hamet Valley Medical Center	Hemet	92543	
10	San Bernardino Community Hospital	San Bernardino	92411	

5. Set Next Meeting Date/Agenda

The committee decided on October 29, 2015 for the next meeting.

6. Comments from the Public/Board Members on Issues not on this Agenda

There were no further comments.

7. Adjournment

Mr. Gilpin adjourned the meeting at 11:47 a.m.

This page left intentionally blank.

STANDARD DETAILS COMMITTEE

oshpd Office of Statewide Health Planning and Development

Hospital Building Safety Board
400 R Street, Suite 200
Sacramento, California 95811-6213
(916) 440-8453
Fax (916) 324-9118
http://www.oshpd.ca.gov/Boards/HBSB/index.html

2/6/14

HOSPITAL BUILDING SAFETY BOARD
Standard Details Committee

MEETING NOTICE
Wednesday, February 19, 2014
10:00 a.m. — 4:00 p.m.

at the
Office of Statewide Health Planning and Development
400 R Street, Suite 452
Sacramento, CA 95811
(916) 440-8453

And, at the
Metropolitan Water District Headquarters
700 N. Alameda Street, Suite 2-546
Los Angeles, CA 90012
(213) 897-0166

Board Members: Bert Hurlbut, Chair; Michael O'Connor, Vice-Chair; Rami Elhassan; Henry Huang; Eric Johnson; Scott Karpinen; Bruce Macpherson; Arlee Monson;

Consulting Member: Mark Hershberg

OSHPD Staff: Brett Beekman; Roy Lobo

HBSB Staff: Linda Janssen, Executive Director; Cathy Kane; Evett Torres

MEETING AGENDA
NOTE: Agenda order is tentative and subject to change without prior notice. All times are approximate and subject to change. A 30-minute to one-hour lunch will be taken sometime during the day.

1. **Welcome and Introductions**

2. **Review the November 6, 2013 Meeting Report**
    - Discussion and public input

3. **Standard Drywall Ceiling Program** — Bruce Macpherson
    - Discussion and public input

4. **Review Industry Comments Regarding Acoustical Ceilings**
    - Discussion and public input

5. **Review the draft Fire Life Safety Details** — Arlee Monson
    - Discussion and public input

6. **Discuss Electrical Standard Details** — Eric Johnson
    - Discussion and public input

7. **Comments from the Public/Board Members on Issues not on this Agenda:** The Board will receive comments from the public/members at this time on matters not on the agenda. Matters raised at this time will be taken under consideration for placement on a subsequent agenda.

8. **Adjournment**

REMINDER: Please call (916) 440-8453 on Tuesday, February 18th, after 3:00 p.m. to confirm that the meeting will be taking place as scheduled. The recording will verify the meeting date and location.

NOTE: Meeting facilities and restrooms are accessible to the physically disabled. If any special accommodations (assistive listening device, sign language interpreter, etc.) are needed, please contact Board Staff at (916) 440-8453. Requests should be made as soon as possible but no later than 10 business days prior to the meeting.

Parking:
Sacramento—There are garages at 500 R Street and CalPERS Plaza. CalPERS Plaza has two entrances: one on Fifth Street, north of R Street; and another on Q Street, between Fourth and Fifth Streets. All three charge $1.25/hour or $12/day. There are also 10-hour parking meters around the perimeter of the building.
Los Angeles—There is valet service at the Metropolitan Water District Building that is available 8 am to 5 pm and they charge between $6 and $12. There is also Five Star Parking lot on Cesar Chavez Avenue and Alameda Street that charge $14/day or $2.00 every 20 minutes.

Questions? Call Board Staff at the above phone number.

2013 CBC STANDARD GYPSUM BOARD CEILING DETAILS FOR SUSPENDED AND JOIST FRAMING CONSTRUCTION

(NON-ACCESSIBLE, SINGLE LAYER GYPSUM BOARD CEILING)

REVIEWED FOR CODE COMPLIANCE
OPD-0003-13
BY: M.R.Karim
DATE: 12/10/2013
CALIFORNIA BUILDING CODE, 2013

DRAWING INDEX

REVISIONS

GXX **DRAWING INDEX, NARRATIVE AND FLOWCHART**

GXX.00 DRAWING INDEX - PAGE 1 OF 2
GXX.01 DRAWING INDEX - PAGE 2 OF 2
GXX.02 NARRATIVE - PAGE 1 OF 3
GXX.03 NARRATIVE - PAGE 2 OF 3
GXX.04 NARRATIVE - PAGE 3 OF 3
GXX.05 FLOWCHART - OVERVIEW OF OPD USE
GXX.06 FLOWCHART - SUSPENDED CEILING: CEILING GRID
GXX.07 FLOWCHART - SUSPENDED CEILING: STRUT & OBSTRUCTIONS
GXX.08 FLOWCHART - SUSPENDED CEILING: CONNECTIONS TO STRUCTURE
GXX.09 FLOWCHART - JOIST FRAME CEILING

GX1 **SUSPENDED CEILING FRAMING COMPONENTS**

GX1.10 POWER ACTUATED FASTENER (PAF) IN CONCRETE OVER METAL DECK OR CONCRETE SLAB - PAGE 1 OF 2

GX1.11 POWER ACTUATED FASTENER (PAF) IN CONCRETE OVER METAL DECK OR CONCRETE SLAB - PAGE 2 OF 2

GX1.12 POWER ACTUATED FASTENER (PAF) IN STEEL
GX1.20 EXPANSION ANCHOR GENERAL NOTES
GX1.21 EXPANSION ANCHOR ALLOWABLE STRENGTHS
GX1.30 SHEET METAL SCREW GENERAL NOTES
GX1.31 SHEET METAL SCREW ALLOWABLE STRENGTHS - PAGES 1 OF 2
GX1.32 SHEET METAL SCREW ALLOWABLE STRENGTHS - PAGES 2 OF 2
GX1.40 METAL STUD PROFILES

GYP-BOARD SUSPENDED CEILING

CG0 **GENERAL NOTES**

CG0.00 GENERAL NOTES - PAGE 1 OF 5
CG0.01 GENERAL NOTES - PAGE 2 OF 5
CG0.02 GENERAL NOTES - PAGE 3 OF 5
CG0.03 GENERAL NOTES - PAGE 4 OF 5
CG0.04 GENERAL NOTES - PAGE 5 OF 5

CG2 **SUSPENDED CEILING BRACING ASSEMBLY**

CG2.10 SUSPENDED CEILING BRACING ASSEMBLY
CG2.20 TYPICAL CEILING PLAN FOR $1.73 < S_{DS} \leq 2.50$ AND $z/h \leq 1.0$
CG2.21 TYPICAL CEILING PLAN FOR $1.15 < S_{DS} \leq 1.73$ AND $z/h \leq 1.0$
CG2.22 TYPICAL CEILING PLAN FOR $S_{DS} \leq 1.15$ AND $z/h \leq 1.0$
CG2.30 CEILING PERIMETER
CG2.31 SPLICE DETAILS
CG2.32 SADDLE TIE DETAILS
CG2.40 EXPANSION JOINT AT INTERSECTIONS
CG2.70 SURFACE MOUNTED FIXTURE
CG2.71 RECESSED LIGHT FIXTURE
CG2.72 RECESSED COVE LIGHT FIXTURE

CG3 **STRUT DETAIL**

CG3.10 STRUT & BRACING WIRE ASSEMBLY - METAL STUD TYPE STRUT
CG3.20 STRUT & BRACING WIRE ASSEMBLY - TUBE TYPE STRUT

REVIEWED FOR CODE COMPLIANCE
oshpd
OPD-0003-13
BY: M.R.Karim
DATE: 12/10/2013
CALIFORNIA BUILDING CODE, 2013

Section Title : OSHPD STANDARD GYPSUM BOARD CEILING DETAILS

OPD No:

Sheet Title : DRAWING INDEX - PAGE 1 OF 2

GXX.00

DRAWING INDEX | REVISIONS

CG4 **HANGER AND BRACING WIRE CONNECTION DETAILS**

CG4.10 HANGER AND BRACING WIRE CONNECTION - TYPICAL WIRE TURNS
CG4.11 HANGER AND BRACING WIRE CONNECTION MATRIX

CG4.21 HANGER WIRE – CONCRETE OVER METAL DECK
CG4.22 HANGER WIRE – CONCRETE SLAB, BEAM, OR JOIST
CG4.23 HANGER WIRE – STRUCTURAL STEEL
CG4.24 HANGER WIRE – SAWN TIMBER
CG4.25 HANGER WIRE – METAL STUD WALL

CG4.31 BRACING WIRE – CONCRETE OVER METAL DECK
CG4.32 BRACING WIRE – CONCRETE SLAB, BEAM, OR JOIST
CG4.33 BRACING WIRE – STRUCTURAL STEEL
CG4.34 BRACING WIRE – SAWN TIMBER
CG4.35 BRACING WIRE – METAL STUD WALL

CG5 **STRUT CONNECTION DETAILS**

CG5.10 STRUT CONNECTION MATRIX
CG5.20 STRUT CONNECTION TO CONCRETE OVER METAL DECK
CG5.30 STRUT CONNECTION TO CONCRETE SLAB, BEAM OR JOIST
CG5.40 STRUT CONNECTION TO STRUCTURAL STEEL
CG5.50 STRUT CONNECTION TO SAWN TIMBER WITH GYPSUM BOARD
CG5.60 STRUT CONNECTION TO SAWN TIMBER WITHOUT GYPSUM BOARD

CG6 **OBSTRUCTION DETAILS**

CG6.10 OBSTRUCTION – TRAPEZE CONDITION
CG6.20 OBSTRUCTION – BRIDGE AT LARGE OFFSET CONDITION
CG6.30 OBSTRUCTION – COUNTER SLOPING STRUTS
CG6.40 OBSTRUCTION – RECESSED LIGHT AT PERIMETER
CG6.50 OBSTRUCTION – STUD KICKER TO OVERHEAD
CG6.60 OBSTRUCTION – STUD KICKER TO WALL

GYP-BOARD CONVENTIONAL JOISTED CEILING

CJ0 **GENERAL NOTES**

CJ0.00 GENERAL NOTES
CJ0.01 GENERAL NOTES
CJ0.02 GENERAL NOTES

CJ2 **JOISTED CEILING ASSEMBLY**

CJ2.10 JOISTED CEILING STRAP BLOCKING DETAIL
CJ2.20 JOISTED CEILING MAXIMUM SPANS
CJ2.30 JOISTED CEILING CONNECTIONS
CJ2.31 JOISTED CEILING AT OPENINGS

REVIEWED FOR CODE COMPLIANCE
opd
BY: M.R.Karim
DATE: 12/10/2013
CALIFORNIA BUILDING CODE, 2013

Section Title : OSHPD STANDARD GYPSUM BOARD CEILING DETAILS

OPD No:

Sheet Title : DRAWING INDEX - PAGE 2 OF 2

GXX.01

NARRATIVE

2013 California Building Code (2013 CBC) Standard Gypsum Board Ceiling Details document contains OSHPD Pre-Approved Details (OPD), which may be incorporated into construction documents. These details have been reviewed for compliance with the 2013 CBC and, when used as shown, without modifications, are deemed to comply with code. They are intended to cover common conditions that occur on many projects. It is anticipated that use of these details will facilitate the design, review, and construction process.

The Narrative and supporting Flowchart, which follows the Narrative, are provided to assist in selecting applicable details from the OPD for incorporation into the construction documents. It is to be used only as a guide and does not provide complete step-by-step instructions for use of the OPD. Narrative comment numbers correspond to the numbered items on the Flowchart.

The following steps apply to the use of OPD:

1. Define Project Parameters

A. Short Period Spectral Response Acceleration (S_{DS}) for project site.

i. The (S_{DS}) identified for use with the OPD shall not be lower than the S_{DS} documented in the project General Notes and/or Specifications.

B. Type of construction.

i. The Registered Design Professional (RDP) in responsible charge shall identify the floor and/or roof framing materials which apply to the use of the OPD under consideration (e.g. wood, concrete, metal deck, etc).

C. Project specific geometry and other conditions.

i. The RDP in responsible charge shall identify the geometry which applies to the use of the OPD under consideration (e.g. floor-to-ceiling height, etc).

ii. The RDP in responsible charge shall identify other unique conditions which apply to the use of the OPD under consideration (e.g. mechanical duct conflicts and other obstructions).

2. Verify Applicability of OPD
Refer to PIN 51.

OPD allow design professionals to incorporate pre-approved details into their construction documents. Projects that utilize OPD shall satisfy the following conditions.

A. The RDP in responsible charge shall verify the applicability of the OPD for their specific project conditions. For example, when designing a fire-rated ceiling, use of the ceiling OPD are acceptable provided the OPD are compatible with the construction requirements for the fire rated assembly.

B. The OPD must be directly applicable to the project conditions. For example, OPD for attachment of a ceiling below a steel deck with concrete fill are not applicable to wood frame construction.

C. Substitutions of items shown in the OPD are not permitted, unless specifically allowed by the OPD. For example, a power-actuated fastener (PAF) may not be substituted in a connection detail that specifies an expansion anchor, unless the OPD specifically permits it. Use of post-installed anchors from different manufacturers is permitted, provided the substituted anchors meet the installation criteria and Allowable Strengths as specified in the OPD. See item #6 of the general notes on CG0.00.

D. Changes to the OPD to accommodate project conditions are not permitted. In such cases, project specific details are required.

REVIEWED FOR CODE COMPLIANCE
OSHPD
OPD-0003-13
BY: M.R.Karim
DATE: 12/10/2013
CALIFORNIA BUILDING CODE, 2013

Section Title : OSHPD STANDARD GYPSUM BOARD CEILING DETAILS			OPD No:
Sheet Title : NARRATIVE - PAGE 1 OF 3			GXX.02

3. Select Appropriate Details from OPD for Suspended Gyp Board Ceilings
Review OPD General Notes before the start of OPD selection process.

A. The GENERAL NOTES section of this OPD document provides detailed specification of the materials and the workmanship associated with the details. The RDP in responsible charge shall confirm the applicability of the OPD details and the specifications noted in this section (CG0.00, CG0.01, CG0.02, CG0.03, CG0.04). Refer to CG2.10 to confirm general configuration requirements.

B. Typical geometric conditions shall be verified from CG2.20 to CG2.22. Refer to Note 10 of the GENERAL NOTES for system component requirements.

C. Ceiling boundary condition shall be provided in conformance with the requirements detailed on CG2.30. Refer to Note 11 of the GENERAL NOTES for system installation requirements.

D. CG2.70 and CG2.71 show the necessary detailing requirements for the support of Fixtures suspended directly from the ceiling system. Refer to Note 15 of the GENERAL NOTES.

E. Hanger and Bracing Wire specifications are shown in Note 9 of the GENERAL NOTES. CG4.10 graphically illustrates the requirements of the specifications at the terminal ends of the wire.

F. Strut requirements are detailed in CG3.10 and CG3.20. Metal Stud and Electrical Metallic Tubing (EMT) are the two types of Struts that are included within the scope of this OPD. Refer to Note 13 of the GENERAL NOTES for system installation requirements:

i. Metal Stud Type Strut details are shown on CG3.10.
ii. Electrical Metallic Tubing (EMT) Strut details are shown on CG3.20.

G. Requirements for detailing at obstructions between the ceiling and the support structure are illustrated in CG6.XX. Different obstruction types require special detailing of Hanger Wires, Bracing Wires, and Struts. Refer to Note 14 of the GENERAL NOTES for system installation requirements.

i. Requirements for detailing at obstructions at Hanger and Bracing Wires are shown on CG6.10, CG6.20, CG6.40, CG6.50, & CG6.60.
ii. Requirements for detailing at obstructions at Struts are shown on CG6.20, CG6.30, CG6.50, & CG6.60.

H. Connection detail requirements for the connection of Hanger and Bracing Wire to support structure are illustrated in Details CG4.XX. Detail requirements for attachment to various structural materials and systems are included in these details. Refer to Note 14 of the GENERAL NOTES for system installation requirements. Refer to Details GX1.XX for fastener design capacities and component properties.

I. Connection detail requirements for the connection of Strut to support structure are illustrated in Details CG5.XX. Detail requirements for attachment to various structural materials and systems are included in these details. Refer to Note 14 of the GENERAL NOTES for system installation requirements. Refer to Details GX1.XX for fastener design capacities and component properties.

OPD-0003-13
Reviewed for Code Compliance by Karim
CALIFORNIA BUILDING CODE, 2

Section Title : OSHPD STANDARD GYPSUM BOARD CEILING DETAILS			OPD No:
Sheet Title : NARRATIVE - PAGE 2 OF 3			GXX.03

4. Select Appropriate Details from OPD for Gyp Board Ceilings with Joist Framing
Review OPD General Notes before the start of OPD selection process.

A. The GENERAL NOTES section of this OPD document provides detailed specification of the materials and the workmanship associated with the details. The RDP in responsible charge shall confirm the applicability of the OPD details and the specifications noted in drawings CJ0.XX. Refer to CJ2.10 and CJ2.20 to confirm general configuration requirements.

B. Typical studs shall be selected based on the corridor span in accordance with CJ2.20.

C. Stud connections are detailed on CJ2.30.

D. Requirements at openings in the ceiling are shown on CJ2.31.

5. Implementation and Use of OPD During Plan Review
Refer to PIN 51.

6. Implementation and Use of OPD During Construction Process
Refer to PIN 51.

A. During construction, OPD are treated as any other detail in the approved construction documents.

B. Pre-approved details submitted after the construction documents have been approved and a building permit has been issued shall be used and/or processed in accordance with Code Application Notice 2-107.4 "Amended Construction Documents." Pre-approved details may be applied as alternates to the approved details shown on the permitted construction documents only on a one for one basis and with written consent of the registered design professional and the registered design professional in responsible charge and in concurrence with OSHPD field staff. Pre-approved details are exempt from additional plan review provided they are incorporated without any modifications. Pre-approved details are subject to field confirmation at which time the applicability of the pre-approved details for specific project conditions shall be evaluated.

C. Changing the scope of a project (adding additional ceilings, for example) does constitute a material alteration to the project, even if OPD can be used for all conditions. In such a case, an Amended Construction Document shall be submitted to OSHPD field staff for review.

REVIEWED FOR CODE COMPLIANCE
OPD-0003-13
BY: M.R.Karim
DATE: 12/10/2013
CALIFORNIA BUILDING CODE, 2013

Section Title : OSHPD STANDARD GYPSUM BOARD CEILING DETAILS			OPD No:
Sheet Title : NARRATIVE - PAGE 3 OF 3			GXX.04

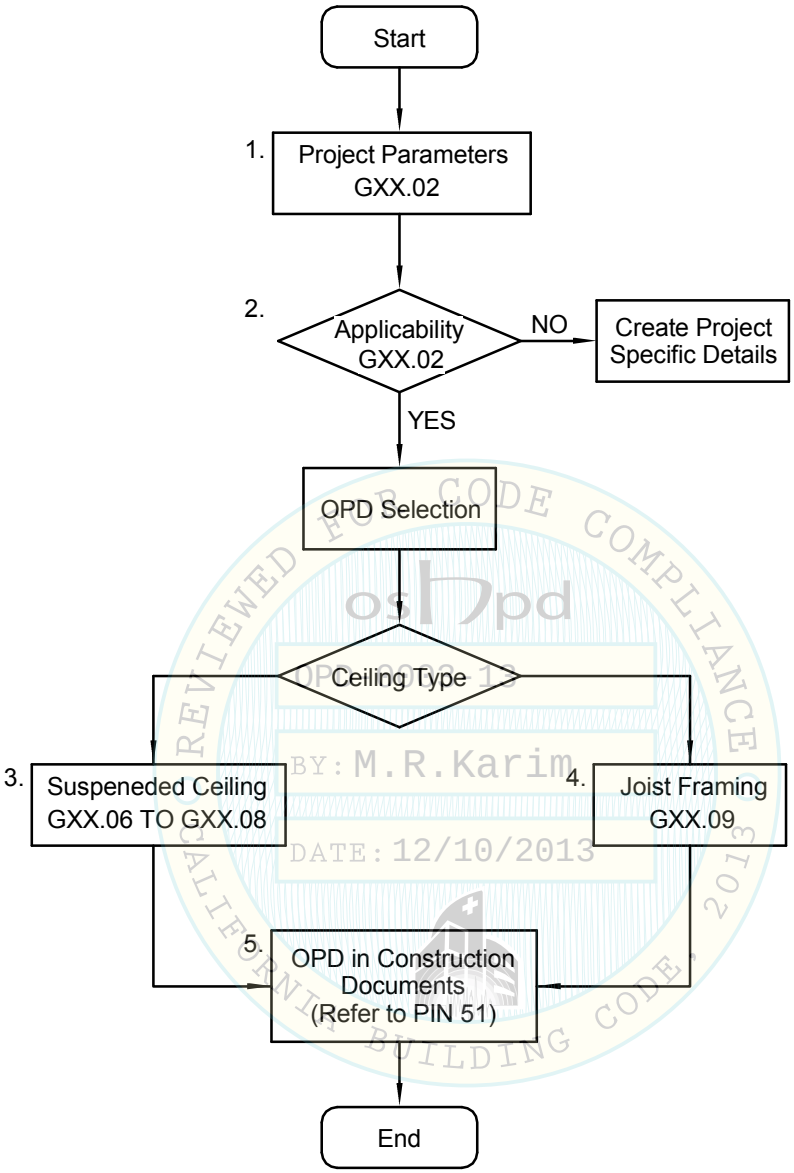

REVIEWED FOR CODE COMPLIANCE
CALIFORNIA BUILDING CODE 2013
oshpd
OPD-0003-13
BY: M.R.Karim
DATE: 12/10/2013

Section Title : OSHPD STANDARD GYPSUM BOARD CEILING DETAILS		OPD No:
Sheet Title : FLOWCHART - OVERVIEW OF OPD USE		GXX.05

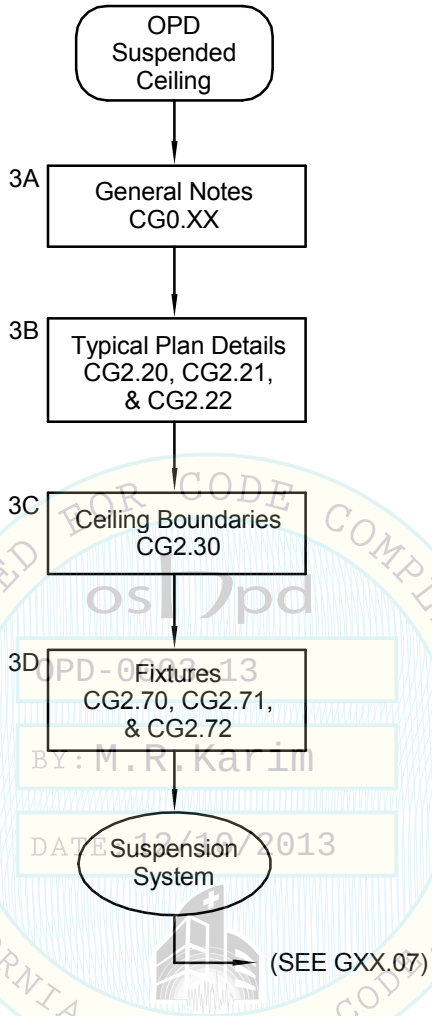

REVIEWED FOR CODE COMPLIANCE
CALIFORNIA BUILDING CODE 2013
OPD-0003-13
BY: M.R.Karim
DATE 12/10/2013

Section Title : OSHPD STANDARD GYPSUM BOARD CEILING DETAILS		OPD No:
Sheet Title : FLOWCHART - SUSPENDED CEILING: CEILING GRID		GXX.06

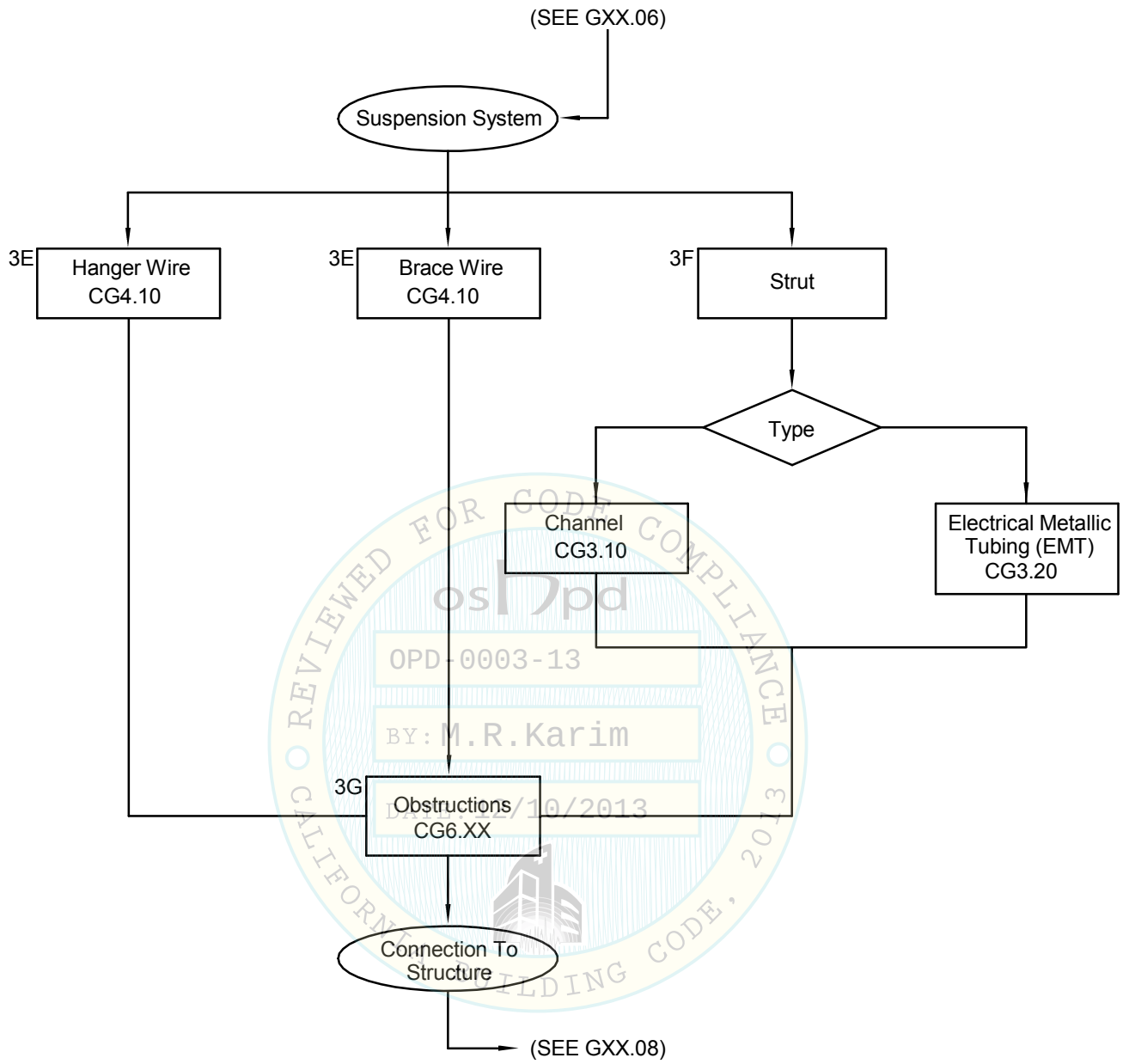

REVIEWED FOR CODE COMPLIANCE
oshpd
OPD-0003-13
BY: M.R.Karim
DATE: 12/10/2013
CALIFORNIA BUILDING CODE, 2013

Section Title : OSHPD STANDARD GYPSUM BOARD CEILING DETAILS		OPD No:
Sheet Title : FLOWCHART - SUSPENDED CEILING: STRUT AND OBSTRUCTIONS		GXX.07

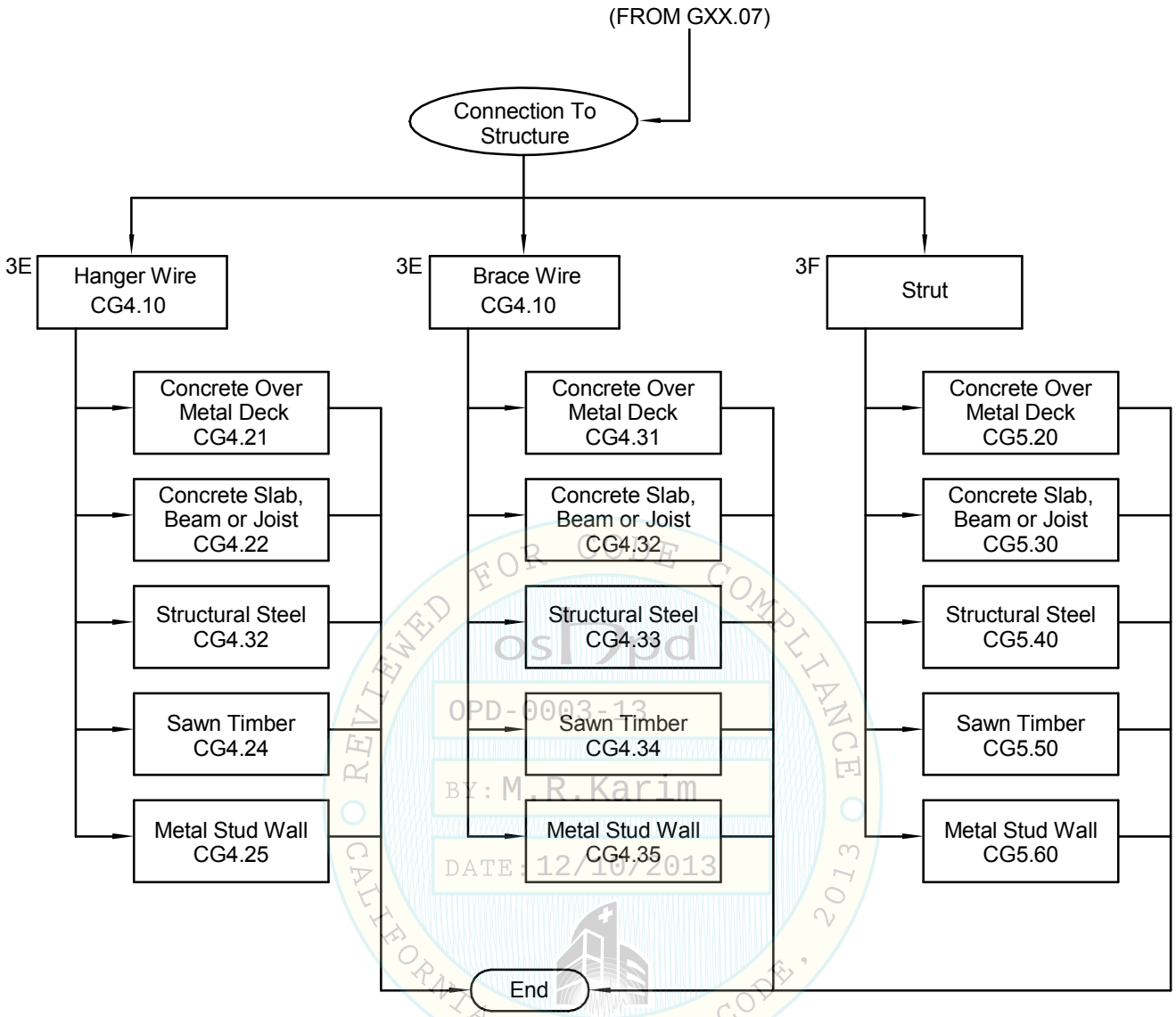

REVIEWED FOR CODE COMPLIANCE
CALIFORNIA BUILDING CODE, 2013
OSHPD
OPD-0003-13
BY: M.R.Karim
DATE: 12/10/2013

Section Title : OSHPD STANDARD GYPSUM BOARD CEILING DETAILS		OPD No:
Sheet Title : FLOWCHART - SUSPENDED CEILING: CONNECTIONS TO STRUCTURE		GXX.08

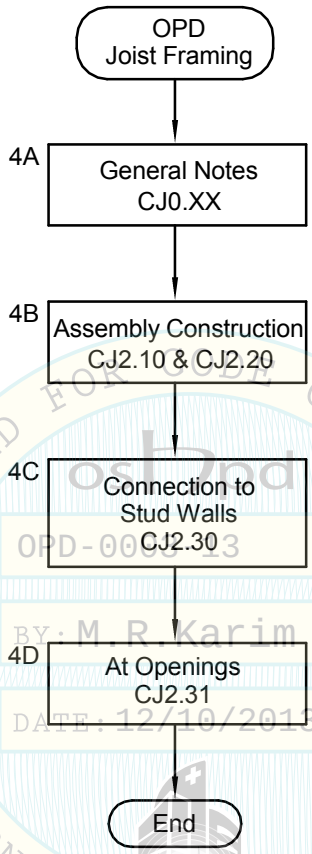

REVIEWED FOR CODE COMPLIANCE
CALIFORNIA BUILDING CODE, 2013
oshpd
OPD-0003-13
BY: M.R.Karim
DATE: 12/10/2013

Section Title : OSHPD STANDARD GYPSUM BOARD CEILING DETAILS	OPD No:
Sheet Title : FLOWCHART - JOIST FRAMING	GXX.09

POWER ACTUATED FASTENER (PAF) GENERAL NOTES
(INSTALLED IN CONCRETE OVER METAL DECK OR CONC SLAB)

1. POWER ACTUATED FASTENER (PAF), POWDER DRIVEN FASTENERS (PDF), POWER DRIVEN PINS (PDP), SHOT PINS ALL REPRESENT THE SAME FASTENER AND WILL HEREAFTER BE REFERRED TO AS POWER ACTUATED FASTENERS (PAF).
2. ALLOWABLE STRENGTHS SHALL BE COMPARED TO ALLOWABLE STRESS DESIGN (ASD) LEVEL DEMAND IN ACCORDANCE WITH THE 2013 CBC SECTION 1605A.3.1.
3. ALLOWABLE STRENGTHS ARE FOR A SINGLE FASTENER WHICH MEET REQUIREMENTS IN SECTIONS BELOW AND TABLES ON GX1.11. THE ALLOWABLE STRENGTHS ARE BASED UPON THE LEAST OF THE ALLOWABLE STRENGTHS LISTED IN THE ICC ESRS 2269 & 1799.
4. MINIMUM CONCRETE STRENGTH f'_c=2000 PSI FOR NORMAL WEIGHT CONCRETE AND f'_c=3000 PSI FOR ALL LIGHT WEIGHT CONCRETE UNLESS OTHERWISE NOTED.
5. POWER ACTUATED FASTENER INSTALLED THROUGH LOW FLUTES OF THE METAL DECK SHALL MEET THE REQUIREMENTS OF THE INSTALLATION CRITERIA AND SECTIONS BELOW.
6. MINIMUM EDGE DISTANCE OF 1 1/8" FROM THE EDGE OF METAL DECK WEB AND 4" FROM THE EDGE OF THE DECK.
7. STEEL DECK TO BE A MINIMUM OF 20GA.
8. CONCRETE FILL DEPTH ABOVE THE TOP OF METAL DECK SHALL BE A MINIMUM OF 3 1/4" LIGHT WEIGHT CONCRETE.
9. PAF SHALL NOT BE USED TO RESIST SEISMIC SHEAR FORCES EXCEPT AT INTERIOR NON-LOAD BEARING, NON-SHEAR WALL PARTITION WALLS (AS PERMITTED BY 2013 CBC SECTION 1908A.1.1) AND COMPONENTS EXEMPT FROM CONSTRUCTION DOCUMENT REVIEW BY 2013 CBC SECTION 1616A.1.18 (NOT PERMITTED TO TAKE SEISMIC SHEAR BY ICC-ES AC70 FOR ANY OTHER CONDITIONS). PAF SHALL NOT BE USED TO CARRY SEISMIC TENSION LOADS (EXCEPT FOR VERTICAL SEISMIC LOAD PRODUCED BY SELF WEIGHT OF THE COMPONENTS) OR IN CRACKED CONCRETE UNLESS APPROVED FOR SUCH LOADING BY OSHPD.
10. PAF SHALL NOT BE USED IN PRE-STRESSED CONCRETE UNLESS NON-DESTRUCTIVE TESTING METHODS ARE USED TO LOCATE STRAND AND REINFORCEMENT PRIOR TO FASTENER INSTALLATION.
11. PAF INSTALLATION SHALL NOT NICK OR DAMAGE EXISTING CONCRETE REINFORCEMENT. SHOULD THIS OCCUR THE RDP IN RESPONSIBLE CHARGE SHALL BE NOTIFIED IMMEDIATELY. PAF SHALL BE INSTALLED 1" CLEAR OF EXISTING REINFORCEMENT. THIS MAY REQUIRE NON-DESTRUCTIVE TESTING.
12. PAF SHALL BE INSTALLED PER CURRENT ICC-ES EVALUATION REPORTS (OR REPORTS FROM OTHER TESTING AGENCIES ACCEPTABLE TO OSHPD).
13. TESTING OF PAF SHALL BE IN ACCORDANCE WITH 2013 CBC SECTION 1913A.7. MINIMUM CONCRETE SUBSTRATE THICKNESS SHALL BE THREE TIMES THE PAF PENETRATION INTO THE CONCRETE SUBSTRATE.
14. TESTING IS NOT REQUIRED OF PAF USED TO ATTACH TRACKS OF INTERIOR NON-SHEAR WALL PARTITIONS FOR SHEAR ONLY WHERE THERE ARE AT LEAST THREE FASTENERS.
15. TOTAL ALLOWABLE LOADS IN TENSION, SHEAR OR TENSION SHEAR COMBINATIONS SHALL NOT EXCEED 90 LBS AS PERMITTED BY EXCEPTION TO ASCE 7-10 SECTION 13.4.5.
16. REFER TO NOTE 6d ON CG0.00 FOR ADDITIONAL PAF REQUIREMENTS.

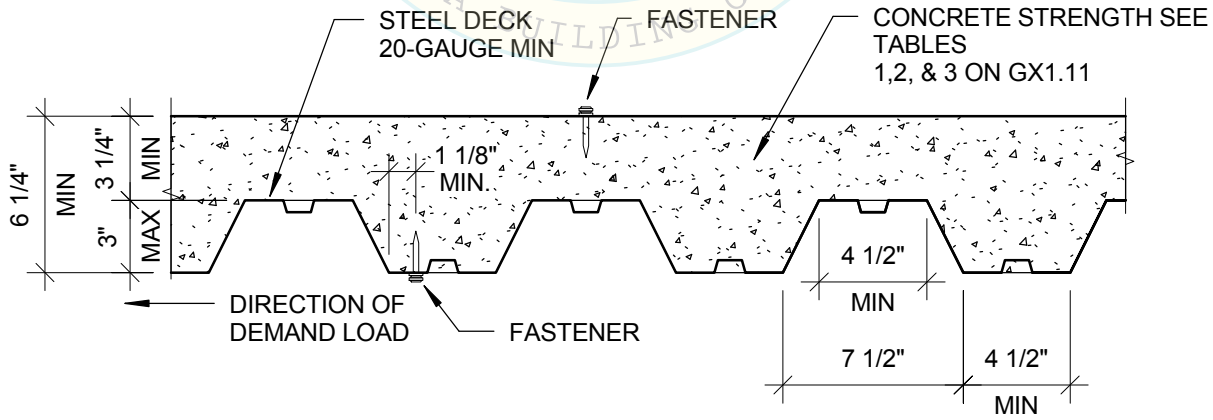

SECTION - COMPOSITE DECK

Section Title : OSHPD STANDARD GYPSUM BOARD CEILING DETAILS		OPD No:
Sheet Title : POWER ACTUATED FASTENER (PAF) IN CONCRETE OVER METAL DECK OR CONCRETE SLAB - PAGE 1 OF 2		GX1.10

POWER ACTUATED FASTENER (PAF) ALLOWABLE STRENGTHS
(INSTALLED IN CONCRETE OVER METAL DECK OR CONC SLAB

TABLE 1

POWER ACTUATED FASTENER INSTALLED IN SAND-LIGHTWEIGHT CONCRETE THROUGH METAL DECK
(f'_c MIN=3000 PSI)

NOMINAL SHANK DIAMETER (IN)	MIN EMBED (IN)	MIN SPACING (IN)	MIN EDGE DISTANCE (IN)	TENSION (LB) (SEE NOTE 15)	SHEAR (LB) (SEE NOTE 15)
0.145 MIN	1 1/4	4	4	90	90

TABLE 2

POWER ACTUATED FASTENERS INSTALLED INTO STRUCTURAL SAND-LIGHTWEIGHT CONCRETE
(f'_c MIN=3000 PSI)

NOMINAL SHANK DIAMETER (IN)	MIN EMBED (IN)	MIN SPACING (IN)	MIN EDGE DISTANCE (IN)	TENSION (LB) (SEE NOTE 15)	SHEAR (LB) (SEE NOTE 15)
0.145 MIN	1 1/4	4	4	90	90

TABLE 3

POWER ACTUATED FASTENER INSTALLED INTO NORMAL-WEIGHT CONCRETE
(f'_c MIN=2000 PSI)

NOMINAL SHANK DIAMETER (IN)	MIN EMBED (IN)	MIN SPACING (IN)	MIN EDGE DISTANCE (IN)	TENSION (LB) (SEE NOTE 15)	SHEAR (LB) (SEE NOTE 15)
0.145 MIN	1 1/4	5.1	4	90	90

REVIEWED FOR CODE COMPLIANCE
oshpd
OPD-0003-13
BY: M.R.Karim
DATE: 12/10/2013
CALIFORNIA BUILDING CODE, 2013

Section Title : OSHPD STANDARD GYPSUM BOARD CEILING DETAILS			OPD No:
Sheet Title : POWER ACTUATED FASTENER (PAF) IN CONCRETE OVER METAL DECK OR CONCRETE SLAB - PAGE 2 OF 2			GX1.11

POWER ACTUATED FASTENER (PAF) GENERAL NOTES (INSTALLED IN STEEL)

1. MINIMUM STEEL TENSILE STRENGTH F_u =58KSI
2. MINIMUM SPACING 1 INCH.
3. MINIMUM EDGE DISTANCE 1/2 INCH.
4. USE KNURLED SHANK.
5. POWER ACTUATED FASTENERS (PAF) SHALL BE INSTALLED PER CURRENT ICC-ES EVALUATION EVALUATION REPORTS OR REPORTS FROM OTHER TESTING AGENCIES ACCEPTABLE TO OSHPD.
6. SEE GENERAL NOTE 6d & 6e ON CG0.00 FOR PAF REQUIREMENTS & ATTACHMENT TO STEEL.
7. POWER ACTUATED FASTENER (PAF), POWEDER DRIVEN FASTENERS (PDF), POWER DRIVEN PINS (PDP), SHOT PINS, ARE COMMON NOMINCLATURES THAT ALL REPRESENT THE SAME FASTENER DESCRIBED HERE IN.
8. ALLOWABLE STRENGTHS SHALL BE COMPARED TO ALLOWABLE STRESS DESIGN (ASD) LEVEL DEMAND IN ACCORDANCE WITH THE 2013 CBC SECTION 1605A.3.1.
9. ALLOWABLE STRENGTHS ARE FOR SINGLE FASTENERS, WHICH MEET THE REQUIREMENTS PER NOTES ABOVE. THE ALLOWABLE STRENGTHS ARE BASED UPON THE LEAST OF THE ALLOWABLE STRENGTHS LISTED IN THE ESRS 2269, 1799 & 2138.
10. TOTAL ALLOWABLE TENSION, SHEAR OR TENSION SHEAR COMBINATION SHALL NOT EXCEED 250 LBS. AS PERMITTED BY THE EXCEPTION TO ASCE 7-10 SECTION 13.4.5.

REVIEWED FOR CODE COMPLIANCE
OSHPD
OPD-0003-13
BY: M.R.Karim
DATE: 12/10/2013
CALIFORNIA BUILDING CODE, 2013

NOMINAL SHANK DIAMETER (IN)	STEEL THICKNESS (IN)							
	3/16		1/4		3/8		1/2	
	TENSION (LB)	SHEAR (LB)	TENSION (LB)	SHEAR (LB)	TENSION (LB)	SHEAR (LB)	TENSION (LB)	SHEAR (LB)
0.145 MIN	155	250	230	250	250	250	190	220

Section Title : OSHPD STANDARD GYPSUM BOARD CEILING DETAILS		OPD No:
Sheet Title : POWER ACTUATED FASTENER (PAF) IN STEEL		GX1.12

EXPANSION ANCHOR GENERAL NOTES

1. ALLOWABLE STRENGTHS SHALL BE COMPARED TO ALLOWABLE STRESS DESIGN (ASD) LEVEL DEMAND IN ACCORDANCE WITH THE 2013 CBC SECTION 1605A.3.1.
2. ALLOWABLE STRENGTHS ARE FOR SINGLE ANCHORS WHICH MEET MIN. REQUIREMENTS IN ACCORDANCE WITH THE TABLE & SECTION BELOW.
3. MINIMUM CONCRETE STRENGTH f'c=3000 PSI.
4. EXPANSION ANCHORS INSTALLED THROUGH UPPER OR LOWER FLUTES OF METAL DECK SHALL MEET THE REQUIREMENTS OF THE INSTALLATION CRITERIA AND SECTION BELOW.
5. STEEL DECK TO BE MIN. 20 GA. W-DECK.
6. MINIMUM CONCRETE FILL DEPTH ABOVE THE TOP OF METAL DECK IN ACCORDANCE WITH THE SECTION AND INSTALLATION CRITERIA BELOW.
7. EXPANSION ANCHORS SHALL NOT BE USED IN PRE-STRESSED CONCRETE UNLESS NON-DESTRUCTIVE TESTING METHODS ARE USED TO LOCATE STRAND & REINFORCING PRIOR TO ANCHOR INSTALLATION.
8. EXPANSION ANCHOR INSTALLATION SHALL NOT NICK OR DAMAGE EXISTING REINFORCEMENT. SHOULD THIS OCCUR THE RDP IN RESPONSIBLE CHARGE SHALL BE NOTIFIED IMMEDIATELY. EXPANSION ANCHORS SHALL BE INSTALLED 1" CLEAR OF EXISTING REINFORCEMENT.
9. EXPANSION ANCHORS SHALL BE INSTALLED PER CURRENT ICC-ES EVALUATION REPORT OR REPORT FROM OTHER TESTING AGENCY ACCEPTABLE TO OSHPD.
10. TESTING OF EXPANSION ANCHORS SHALL BE IN ACCORDANCE WITH 2013 CBC SECTION 1913A.7.
11. EXPANSION ANCHORS SHALL BE INSTALLED TO COMPLY WITH THE MINIMUM SLAB THICKNESS REQUIREMENTS ESTABLISHED BY THE ICC-ESR FOR THE SPECIFIED ANCHOR.
12. REFER TO NOTE 6c ON CG0.00 FOR ADDITIONAL EXPANSION ANCHOR REQUIREMENTS.
13. ALL VALUES IN TABLES ARE FOR CRACKED CONCRETE & INCLUDE REDUCTION BASED ON ACI 318-11 SECTION D.3.3.4.4 REQUIREMENTS. THE ALLOWABLE STRENGTHS ARE BASED UPON THE LEAST OF THE ALLOWABLE STRENGTHS CALCULATED USING THE ICC ESRS 1917, 2427 & 3037 AND USING AN ALLOWABLE STRENGTH CONVERSION FACTOR OF 1.4.
14. ALL VALUES IN THE TABLE REFLECT ALLOWABLE STRENGTHS WITH 20% STRESS INCREASE FOR LOAD COMBINATIONS WITH OVERSTRENGTH FACTOR IN ACCORDANCE WITH ASCE 7-10 SECTION 12.4.3.3.

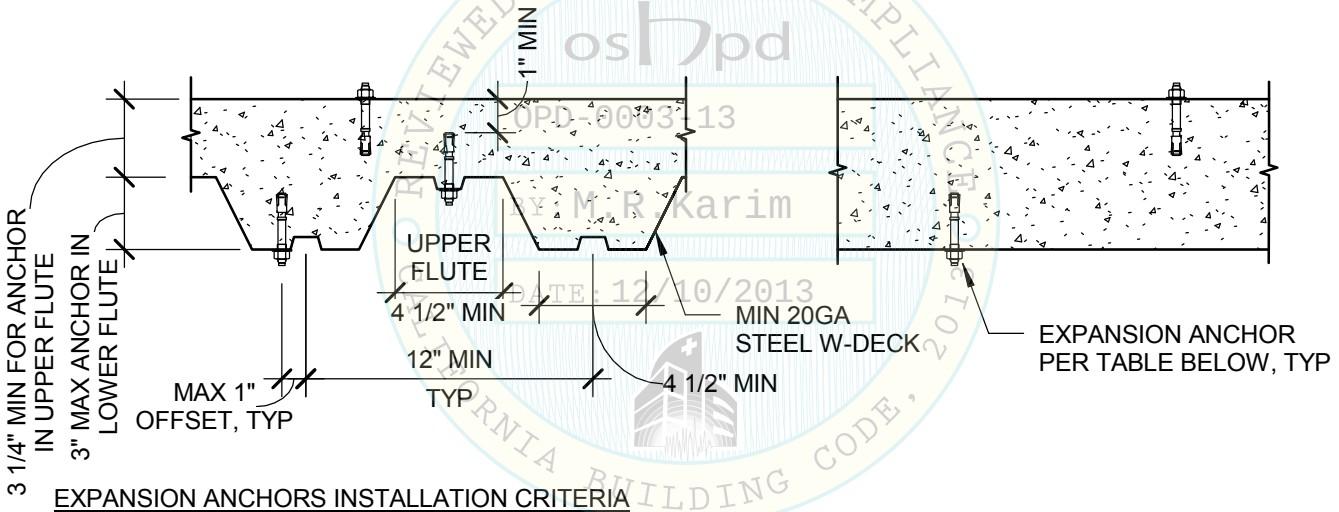

OSHPD
OPD-0003-13
BY: M. R. Karim
DATE: 12/10/2013
REVIEWED FOR CODE COMPLIANCE
CALIFORNIA BUILDING CODE, 2013

EXPANSION ANCHORS INSTALLATION CRITERIA

NOMINAL ANCHOR DIAMETER (IN)					
	3/8	1/2		5/8	
EFFECTIVE MIN EMBEDMENT (IN)	2	2 1/4	3 1/4	3 1/8	4
MIN MEMBER THICKNESS NWC SLAB OR BEAM ONLY (IN)	4.5	4.5	6	6	7 1/4
MIN ANCHOR SPACING (3 x EMBED) (IN)	6 3/4	6 3/4	9 3/4	9 3/8	12
MIN EDGE DISTANCE (IN)	6	7	7 1/2	6 1/2	8 3/4

Section Title : OSHPD STANDARD GYPSUM BOARD CEILING DETAILS

OPD No:

Sheet Title : EXPANSION ANCHOR GENERAL NOTES

GX1.20

EXPANSION ANCHOR ALLOWABLE STRENGTHS

TABLE 1

EXPANSION ANCHORS INSTALLED IN TO THE UNDERSIDE OF STRUCTURAL SAND-LIGHTWEIGHT CONCRETE (f'_c MIN=3000 PSI) OVER METAL DECK

ANCHOR DIA. (IN)	EMBED (IN)	SHEAR (LB)	TENSION (LB)
3/8	2	747	610
1/2	2 1/4	1029	610
1/2	3 1/4	1173	1095
5/8	3 1/8	1353	836
5/8	4	3070	1941

TABLE 2

EXPANSION ANCHORS INSTALLED IN TO THE TOP OF STRUCTURAL SAND-LIGHTWEIGHT CONCRETE (f'_c MIN=3000 PSI) OVER METAL DECK

ANCHOR DIA. (IN)	EMBED (IN)	SHEAR (LB)	TENSION (LB)
3/8	2	948	624
1/2	2 1/4	948	660

TABLE 3

EXPANSION ANCHORS INSTALLED IN NORMAL WEIGHT CONCRETE (f'_c MIN=3000 PSI)

ANCHOR DIA. (IN)	EMBED (IN)	SHEAR (LB)	TENSION (LB)
3/8	2	1020	1039
1/2	2 1/4	1580	1101
1/2	3 1/4	3273	2250
5/8	3 1/8	3020	2150
5/8	4	4469	3113

REVIEWED FOR CODE COMPLIANCE
OSHPD
OPD 0003-13
M.R.Karim
DATE: 12/10/2013
CALIFORNIA BUILDING CODE, 2013

Section Title : OSHPD STANDARD GYPSUM BOARD CEILING DETAILS			OPD No:
Sheet Title : EXPANSION ANCHOR ALLOWABLE STRENGTHS			GX1.21

SHEET METAL SCREW (SMS) GENERAL NOTES

1. THE ALLOWABLE STRENGTHS ARE BASED UPON THE AISI S100-07/S2-10 AND ARE LIMITED BY ACTUAL TESTED STRENGTH OF THE SCREWS IN TENSION AND SHEAR.
2. THE ALLOWABLE STRENGTHS ARE BASED UPON THE LEAST OF THE AVERAGE TESTED TENSILE AND SHEAR STRENGTHS TABULATED FROM ICC ESR'S 1976, 2196, 1730, 1408, AND THE STEEL STUD MANUFACTURER'S ASSOCIATION (SSMA). FASTENER TYPES AND SIZES APPLY TO NON-PROPRIETARY FASTENER TYPES AND SIZES, AND DOES NOT ENDORSE A SPECIFIC MANUFACTURER. WHERE PROPRIETARY FASTENERS ARE SPECIFIED, NO EXCEPTIONS ARE TAKEN TO THE USE OF MANUFACTURER SPECIFIC VALUES THAT ARE BASED UPON THE AISI S100-07/S2-10, SECTION E4. ALL SCREW FASTENERS SHALL SATISFY ICC-ES AC118-ACCEPTANCE CRITERIA FOR SELF TAPPING SCREW FASTENERS.
3. TABLE 1 REPRESENTS ALLOWABLE TENSION AND SHEAR STRENGTHS FOR NON-PROPRIETARY SHEET METAL SCREWS FOR STEEL TO STEEL CONNECTIONS.
4. TABLES 2 AND 3 REPRESENT ALLOWABLE TENSION AND SHEAR STRENGTHS THAT INCORPORATE THE EFFECTS OF EITHER ONE (1) OR TWO (2) LAYERS OF 5/8" GYPSUM BOARD BETWEEN FASTENER HEAD AND CONNECTING STEEL MATERIAL.
5. IN ORDER TO USE THE VALUES IN TABLES 1, 2, AND 3, THE ATTACHMENTS SHALL BE DETAILED IN SUCH A WAY AS TO AVOID PRYING AND THE STUDS MUST BE STABILIZED WITH FULL-DEPTH BLOCKING WITH CONTINUOUS STRAPS ALONG THE FLANGES OR WITH BACKING BARS.
6. PENETRATION OF SCREWS THROUGH JOINED MATERIAL SHOULD NOT BE LESS THAN THREE (3) EXPOSED THREADS.
7. STEEL THICKNESSES JOINED ARE ASSUMED TO BE THE SAME. IF DISSIMILAR THICKNESSES ARE BEING CONNECTED, THE VALUE FOR THE THINNER PART JOINED SHALL BE USED.
8. THE MINIMUM SPACING BETWEEN CENTERS OF FASTENERS SHALL NOT BE LESS THAN 3 X FASTENER DIAMETER. THE MINIMUM EDGE DISTANCE FROM THE CENTER OF A FASTENER TO THE EDGE OF ANY PART SHALL NOT BE LESS THAN 1.5 X FASTENER DIAMETER. WHERE THE END DISTANCE IS PARALLEL TO THE FORCE ON THE FASTENER, THE NOMINAL SHEAR STRENGTH SHALL BE LIMITED BY SECTION E4.3.2 OF THE AISI S100-07/S2-10.
9. GALVANIZED METAL STUDS, TRACK AND SHEET STEEL SHALL CONFORM TO ASTM A653-09a MATERIAL (OR OTHER EQUIVALENT ASTM LISTED MATERIALS IN THE AISI S100-07/S2-10, SECTION A2.1) WITH A MINIMUM YIELD STRENGTH OF 33 KSI FOR 43 MIL (18 GA) AND LIGHTER, AND MINIMUM YIELD STRENGTH OF 50 KSI FOR 54 MIL (16 GA) & HEAVIER.
10. WHERE VALUES ARE NOT GIVEN, SUCH COMBINATIONS OF SCREW SIZES & MATERIAL THICKNESS ARE NOT RECOMMENDED.
11. IF THE ATTACHMENT DETAILS RESULT IN PRYING WITH A MOMENT ARM NOT TO EXCEED 1 5/8", THE VALUES IN TABLE 4 MAY BE USED. IF THE ATTACHMENT DETAILS RESULT IN PRYING WITH A MOMENT ARM THAT EXCEEDS 1 5/8", THE REREGISTERED DESIGN PROFESSIONAL IN RESPONSIBLE CHARGE OF THE PROJECT SHALL DETERMINE THE ALLOWABLE VALUES AND SUBMIT SUBSTANTIATION FOR THEM TO OSHPD FOR REVIEW.
12. INTERACTION OF SHEAR AND TENSION SHALL BE BASED ON $T/T_{ALL} + V/V_{ALL} \leq 1.0$.
13. REFER TO NOTE 6A ON CG0.00 FOR ADDITIONAL SHEET METAL SCREW REQUIREMENTS.

OPD-0003-13 Reviewed for Code Compliance by Karim 12/10/2013 CALIFORNIA BUILDING CODE

Section Title : OSHPD STANDARD GYPSUM BOARD CEILING DETAILS			OPD No:
Sheet Title : SHEET METAL SCREW GENERAL NOTES			GX1.30

SHEET METAL SCREW (SMS) ALLOWABLE STRENGTHS

TABLE 1

SHEET METAL SCREW ALLOWABLE STRENGTHS FOR STEEL TO STEEL CONNECTIONS.

Fy (KSI)	MIL (STEEL GA)	FASTENER SIZE									
		NO. 14		NO. 12		NO. 10		NO. 8		NO. 6	
		0.250 IN		0.216 IN		0.190 IN		0.164 IN		0.138 IN	
		SHEAR (LB)	TENSION (LB)	SHEAR (LB)	TENSION (LB)	SHEAR (LB)	TENSION (LB)	SHEAR (LB)	TENSION (LB)	SHEAR (LB)	TENSION (LB)
50	97 (12)	704	275	525	205	-	-	-	-	-	-
	68 (14)	704	275	525	205	405	159	-	-	-	-
	54 (16)	613	261	525	205	405	159	303	118	-	-
33	43 (18)	302	144	280	124	263	109	244	94	165	79
	33 (20)	-	-	-	-	177	84	164	72	151	61

NOTES:

1. SEE GENERAL NOTES ON GX1.30 FOR ADDITIONAL INFORMATION .
2. WHERE ONE OR TWO LAYERS OF GYP BOARD OCCURS BETWEEN STEEL SURFACES, THE ALLOWABLE VALUES OF TABLE 2 & 3 SHALL BE USED.
3. ALLOWABLE STRENGTH VALUES DO NOT ACCOUNT FOR EFFECTS FROM PRYING. THE RDP IN RESPONSIBLE CHARGE OF THE PROJECT SHALL PROVIDE ADEQUATE BLOCKING/RESTRAINT TO PREVENT PRYING ACTION. WHERE PRYING OCCURS, THE VALUES AND CONSTRAINTS OF TABLE 4 SHALL BE USED.

OSHPD
OPD-0003-13
BY: M.R.Karim
DATE: 12/10/2013
REVIEWED FOR CODE COMPLIANCE
CALIFORNIA BUILDING CODE 2013

TABLE 2 - NON-PRYING CONDITION

SHEET METAL SCREW ALLOWABLE STRENGTHS FOR STEEL TO STEEL CONNECTIONS.
WITH ONE LAYER OF 5/8" GYP BOARD BETWEEN STEEL SURFACES.

Fy (KSI)	MIL (STEEL GA)	FASTENER SIZE									
		NO. 14		NO. 12		NO. 10		NO. 8		NO. 6	
		0.250 IN		0.216 IN		0.190 IN		0.164 IN		0.138 IN	
		SHEAR (LB)	TENSION (LB)	SHEAR (LB)	TENSION (LB)	SHEAR (LB)	TENSION (LB)	SHEAR (LB)	TENSION (LB)	SHEAR (LB)	TENSION (LB)
50	97 (12)	226	275	180	205	-	-	-	-	-	-
	68 (14)	226	275	180	205	140	159	-	-	-	-
	54 (16)	226	261	180	205	140	159	120	118	-	-
33	43 (18)	226	144	180	124	140	109	120	94	60	79
	33 (20)	-	-	-	-	100	84	80	72	60	61

NOTES:

1. SEE GENERAL NOTES ON GX1.30 FOR ADDITIONAL INFORMATION .
2. ALLOWABLE STRENGTH VALUES DO NOT ACCOUNT FOR EFFECTS FROM PRYING. THE RDP IN RESPONSIBLE CHARGE OF THE PROJECT SHALL PROVIDE ADEQUATE BLOCKING/RESTRAINT TO PREVENT PRYING ACTION. WHERE PRYING OCCURS, THE VALUES AND CONSTRAINTS OF TABLE 4 SHALL BE USED.

Section Title : OSHPD STANDARD GYPSUM BOARD CEILING DETAILS	OPD No:
Sheet Title : SHEET METAL ALLOWABLE STRENGTHS - PAGES 1 OF 2	GX1.31

SHEET METAL SCREW (SMS) ALLOWABLE STRENGTHS (CONTINUED)

TABLE 3 - NON-PRYING CONDITION

SHEET METAL SCREW ALLOWABLE STRENGTHS FOR STEEL TO STEEL CONNECTIONS WITH TWO LAYERS OF 5/8" GYP BOARD BETWEEN STEEL SURFACES.

Fv (KSI)	MIL (STEEL GA)	FASTENER SIZE									
		NO. 14		NO. 12		NO. 10		NO. 8		NO. 6	
		0.250 IN		0.216 IN		0.190 IN		0.164 IN		0.138 IN	
		SHEAR (LB)	TENSION (LB)	SHEAR (LB)	TENSION (LB)	SHEAR (LB)	TENSION (LB)	SHEAR (LB)	TENSION (LB)	SHEAR (LB)	TENSION (LB)
50	97 (12)	166	275	130	205	-	-	-	-	-	-
	68 (14)	166	275	130	205	100	159	-	-	-	-
	54 (16)	166	261	130	205	100	159	80	118	-	-
33	43 (18)	166	144	130	124	100	109	80	94	50	79
	33 (20)	-	-	-	-	70	84	50	72	40	61

NOTES:
1. SEE GENERAL NOTES ON GX1.30 FOR ADDITIONAL INFORMATION .
2. ALLOWABLE STRENGTH VALUES DO NOT ACCOUNT FOR EFFECTS FROM PRYING. THE RDP IN RESPONSIBLE CHARGE TO PROVIDE ADEQUATE BLOCKING/RESTRAINT TO PREVENT PRYING ACTION. WHERE PRYING OCCURS, THE VALUES AND CONSTRAINTS OF TABLE 4 SHALL BE USED.

TABLE 4 - PRYING CONDITION (SEE DETAILS BELOW - STRUT CAN BE HORIZONTAL OR VERTICAL)

SHEET METAL SCREW ALLOWABLE STRENGTHS FOR STEEL TO STEEL CONNECTIONS WITH ONE OR TWO LAYERS OF 5/8" GRP BOARD BETWEEN STEEL SURFACES AND MAXIMUM PRYING MOMENT ARM OF 1 5/8"

Fv (KSI)	MIL (STEEL GA)	FASTENER SIZE									
		NO. 14		NO. 12		NO. 10		NO. 8		NO. 6	
		0.250 IN		0.216 IN		0.190 IN		0.164 IN		0.138 IN	
		SHEAR (LB)	TENSION (LB)	SHEAR (LB)	TENSION (LB)	SHEAR (LB)	TENSION (LB)	SHEAR (LB)	TENSION (LB)	SHEAR (LB)	TENSION (LB)
50	97 (12)	40	275	30	205	-	-	-	-	-	-
	68 (14)	40	275	30	205	25	159	-	-	-	-
	54 (16)	40	261	30	205	25	159	20	118	-	-
33	43 (18)	40	144	30	124	25	109	20	94	10	79
	33 (20)	-	-	-	-	15	84	15	15	10	61

REVIEWED FOR CODE COMPLIANCE BY OSHPD
OPD-0003-13
BY: M.R.Karim
DATE: 12/10/2013
CALIFORNIA BUILDING CODE 2010

NOTES:
1. SEE GENERAL NOTES ON GX1.30 FOR ADDITIONAL INFORMATION.
2. ALLOWABLE STRENGTH VALUES LISTED IN TABLE 4 ARE BASED UPON A LIMITED TEST ASSEMBLY WHERE THE ORIGIN AND DIRECTION OF THE LOAD RESULTS IN PRYING UPON THE FASTENER. THE MAGNITUDE OF THIS PRYING EFFECT SHALL BE LIMITED TO A MOMENT ARM OF 1 5/8" FROM THE FASTENER.

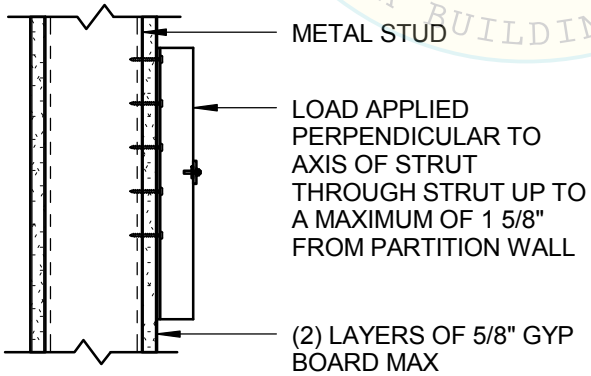

WALL ELEV WITH LOAD APPLIED THROUGH STRUT

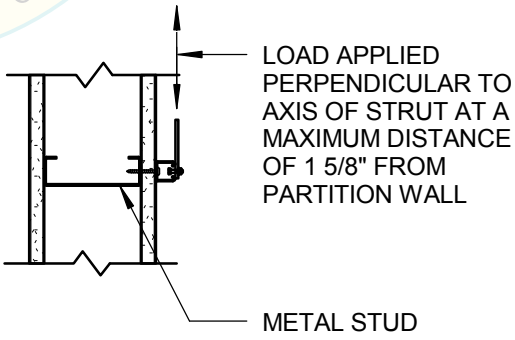

PLAN VIEW

Section Title : OSHPD STANDARD GYPSUM BOARD CEILING DETAILS	OPD No:
Sheet Title : SHEET METAL SCREW ALLOWABLE STRENGTHS - PAGES 2 OF 2	GX1.32

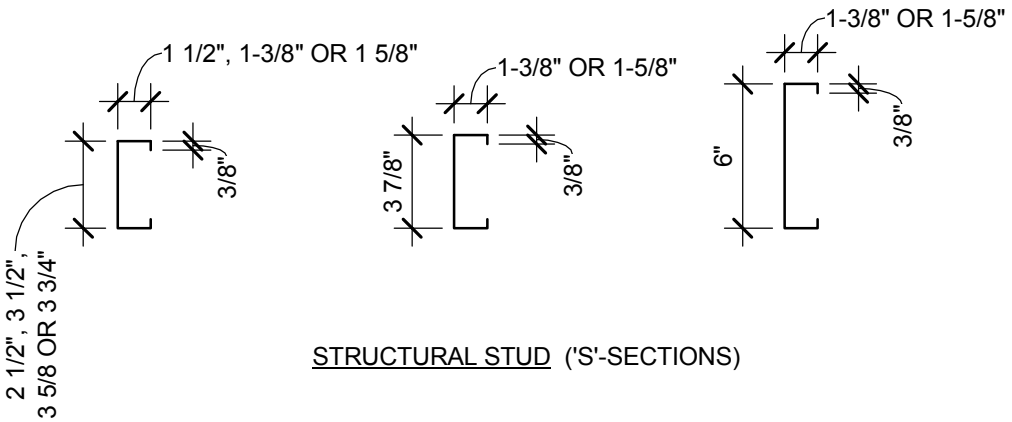

STRUCTURAL STUD ('S'-SECTIONS)

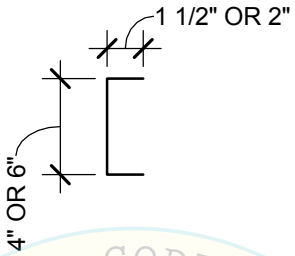

STRUCTURAL TRACK ('T'-SECTIONS)

REVIEWED FOR CODE COMPLIANCE
OSHPD
OPD-0003-13
BY: M.R.Karim
DATE: 12/10/2013
CALIFORNIA BUILDING CODE, 2013

DESIGNATION THICKNESS (MILS)	REFERENCE ONLY GAUGE NO.
18	25
27	22
33	20
43	18
54	16
68	14
97	12
118	10

NOTE:

1. F_y = 50KSI FOR 54 MIL (16GA) & THICKER SECTIONS, AND F_y = 33KSI FOR SECTIONS UP TO & INCLUDING 43 MI (18GA).
2. SIZE AND THICKNESS ARE CONSIDERED MINIMUMS.
3. STRUCTURAL STUDS SHALL NOT BE PUNCHED UNLESS NOTED OTHERWISE.

Section Title : OSHPD STANDARD GYPSUM BOARD CEILING DETAILS			OPD No:
Sheet Title : METAL STUD PROFILES			GX1.40

SUSPENDED GYP BOARD CEILING
GENERAL NOTES

1. CONSTRUCTION, WORKMANSHIP AND MATERIAL SHALL CONFORM TO THE 2013 CALIFORNIA BUILDING STANDARDS CODE (CBSC 2013).

2. THE CONTRACTOR SHALL NOTIFY OSHPD AND THE REGISTERED DESIGN PROFESSIONAL (RDP) IN RESPONSIBLE CHARGE WHERE A CONFLICT OR DISCREPANCY OCCURS BETWEEN THE CONSTRUCTION DRAWINGS AND ANY OTHER PORTION OF THE CONSTRUCTION DOCUMENTS, FIELD CONDITIONS, OR WHERE ANY CONDITIONS ARISE NOT COVERED BY THESE DOCUMENTS WHEREIN WORK WILL NOT COMPLY WITH CODE REQUIREMENTS.

3. THE INTENT OF THE DRAWINGS AND SPECIFICATIONS IS TO CONSTRUCT THE HOSPITAL BUILDING IN ACCORDANCE WITH THE CALIFORNIA BUILDING STANDARD CODE, 2013 (CBSC 2013). SHOULD ANY CONDITION DEVELOP NOT COVERED BY THE APPROVED CONSTRUCTION DOCUMENTS WHEREIN THE WORK WILL NOT COMPLY WITH CBSC 2013, A CHANGE ORDER DETAILING AND SPECIFYING THE REQUIRED WORK SHALL BE SUBMITTED TO AND APPROVED BY OSHPD BEFORE PROCEEDING WITH THE WORK.

4. GALVANIZED METAL STUDS, TRACKS AND SHEET STEEL SHALL CONFORM TO ASTM A653-11 MATERIAL, OR OTHER EQUIVALENT ASTM LISTED MATERIALS IN SECTION A2.1 OF THE AISI SI00-07/S2-10; NORTH AMERICAN SPECIFICATION FOR THE DESIGN OF COLD-FORMED STEEL STRUCTURAL MEMBERS WITH SUPPLEMENT 2, DATED 2010, WITH A MINIMUM YIELD STRENGTH OF 33 KSI FOR 43 MIL (18 GAGE) AND LIGHTER AND MINIMUM YIELD STRENGTH OF 50 KSI FOR HEAVIER GAGES.

   METAL STUDS AND TRACKS SHALL BE OF SIZE, THICKNESS AND SECTION PROPERTIES SHOWN ON TABLES 1-1, 1-2 AND 1-3 OF THE AISI MANUAL, COLD-FORMED STEEL DESIGN, 2008 EDITION. THE RDP IN RESPONSIBLE CHARGE SHALL OBTAIN OSHPD APPROVAL FOR ANY SUBSTITUTIONS.

5. ELECTRICAL METALLIC TUBE (EMT) SHALL BE ANSI C80.3/UL 797 CARBON STEEL WITH G90 GALVANIZING. EMT SHALL HAVE MINIMUM YIELD STRENGTH OF (Fy =) 30 KSI AND MINIMUM ULTIMATE STRENGTH OF (Fu =) 48 KSI.

6. THESE OPD REFER TO FASTENER TYPE AND SIZE BUT DO NOT SPECIFY OR ENDORSE A SPECIFIC MANUFACTURER. THE RDP IN RESPONSIBLE CHARGE SHALL SELECT A MANUFACTURER AND SELECTED FASTENER CAPACITIES SHALL MATCH OR EXCEED THE STRENGTHS LISTED HEREIN. THE FOLLOWING REQUIREMENTS SHALL ALSO BE MET:

   a. SHEET METAL SCREWS SHALL COMPLY WITH ASTM C 1513-10, ASME B18.6.4-98 (R2005) AND ICC-ES AC 118 AND ALLOWABLE STRENGTH SHALL BE BASED ON INFORMATION PROVIDED IN CG1.31 AND CG1.32. PENETRATION OF SCREWS THROUGH JOINED MATERIAL SHALL NOT BE LESS THAN THREE EXPOSED THREADS.

   b. WELDING SHALL BE IN ACCORDANCE WITH AWS D1.3 USING E60XX SERIES ELECTRODES. FIELD WELDING SHALL HAVE SPECIAL INSPECTION IN ACCORDANCE WITH 2013 CBC SECTION 1705A.2.

   c. POST- INSTALLED ANCHORS (E.G. EXPANSION ANCHORS, SCREW ANCHORS AND POWER ACTUATED FASTENERS) SHALL HAVE SPECIAL INSPECTION AND TESTING IN ACCORDANCE WITH THE 2013 CBC SECTIONS 1705A.3 & 1913A.7. FOR QUALIFICATION, DESIGN AND USE OF POST-INSTALLED ANCHORS IN CONCRETE SEE THE 2013 CBC SECTIONS 1616A.1.19 AND 1908A.1.1. LISTING OF CURRENT ICC-ES EVALUATION REPORTS (OR REPORTS FROM OTHER TESTING AGENCIES ACCEPTABLE TO OSHPD) SHALL BE REQUIRED FOR FASTENER USED.

   d. POWER-ACTUATED FASTENERS (PAF), POWDER DRIVEN FASTENERS (PDF), POWER DRIVEN PINS (PDP) AND SHOT PINS ALL REPRESENT THE SAME FASTENER AND WILL HEREAFTER BE REFERRED TO AS POWER ACTUATED FASTENERS (PAF). PAF'S SHALL SATISFY THE CURRENT AC70-ACCEPTANCE CRITERIA FOR FASTENERS POWER-DRIVEN INTO CONCRETE, STEEL AND MASONRY ELEMENTS AND THE 2013 CBC SECTIONS 1908A.1.1. LISTING OF CURRENT ICC ES EVALUATION REPORTS (OR REPORTS FROM OTHER TESTING AGENCIES ACCEPTABLE TO OSHPD) SHALL BE REQUIRED FOR FASTENERS USED.

   e. FOR PAF INSTALLED IN STEEL THE FASTENER PENETRATION SHALL HAVE THE ENTIRE POINTED END OF THE FASTENER DRIVEN THROUGH THE STEEL MEMBER, EXCEPT AS NOTED IN CURRENT REPORTS FROM TESTING AGENCIES ACCEPTABLE TO OSHPD.

CODE COMPLIANCE
OPD-0003-13
BY: M.K.Karim
DATE: 12/10/2013

Section Title : OSHPD STANDARD GYPSUM BOARD CEILING DETAILS		OPD No:
Sheet Title : GYP-BOARD SUSPENDED CEILING PAGE 1 OF 5		CG0.00

7. DESIGN CRITERIA

   a. BUILDING CODE: 2013 CALIFORNIA BUILDING CODE (2013 CBC), ASCE 7-10, AISI S100-07/S2-10, AND ASTM C754-11. FOR LOAD COMBINATIONS, ALLOWABLE STRESS DESIGN SHALL BE IN ACCORDANCE WITH 2013 CBC SECTION 1605A.3.1.

   b. FASTENER CAPACITIES TABLES WERE DEVELOPED BASED ON ICC REPORTS BY SEVERAL MANUFACTURERS.

   c. THE DESIGN ASSUMES THAT BUILDING ELEMENTS AND SUPPORTS, TO WHICH THE COMPONENTS ADDRESSED IN THIS DOCUMENT ARE ANCHORED, HAVE SUFFICIENT CAPACITY TO CARRY THE LOADS IMPOSED BY THE COMPONENTS IN COMBINATION WITH ALL OTHER LOADS. EVALUATION OF THE CAPACITY OF THESE SUPPORTING BUILDING ELEMENTS IS BEYOND THE SCOPE OF THE OPD.

   d. THIS OPD IS LIMITED TO CEILING ASSEMBLIES HAVING MAXIMUM DEAD WEIGHT OF 4 PSF, INCLUDING LIGHTING FIXTURES (LUMINERIES) AND MECHANICAL SERVICES, EACH WEIGHING LESS THAN 56 LBS AND ATTACHED TO CEILING FRAMING SYSTEM. HEAVIER SYSTEM AND THOSE SUPPORTING LATERAL FORCES FROM PARTITION WALLS ARE OUTSIDE THE SCOPE OF THIS OPD AND WILL REQUIRE PROJECT SPECIFIC DESIGN.

8. THE RDP IN RESPONSIBLE CHARGE SHALL VERIFY THE FIRE RESISTENCE AND ACOUSTICAL RATINGS FOR ALL CEILING ASSEMBLIES.

9. "CEILING WIRE" SHALL CONFORM WITH GALVANIZED SOFT ANNEALED MILD STEEL WIRE AS DEFINED IN ASTM A641 (CLASS 1 COATING) WITH 70 KSI MINIMUM TENSILE STRENGTH:

   a. FOUR (4) TWISTS OF WIRE WITHIN 1.5" DEVELOPS THE ALLOWABLE LOAD FOR THE WIRE.

   b. THREE (3) TWISTS WITHIN 3" MAY BE USED TO DEVELOP THE MAXIMUM 50% OF ALLOWABLE LOAD.

10. SUSPENSION SYSTEM COMPONENTS SHALL COMPLY WITH ASTM C754:

   a. MAIN RUNNNERS SHALL CONSIST OF 16 GAGE 1-1/2" COLD ROLLED U-CHANNEL 150U050-54 SPACED AT 4'-0" OC MAX. MAIN RUNNERS SHALL BE SUPPORTED BY HANGER WIRES AT 4'-0" OC MAX AND WITHIN 6" FROM EA END.

   b. FURRING CHANNEL SHALL CONSIST OF 25 GAGE 7/8" (HAT) FURRING CHANNELS (087F125-18) at 2'-0" OC MAX. FURRING CHANNELS SHALL BE SADDLE TIED TO MAIN RUNNERS WITH 16 GAGE TIE WIRE OR A DOUBLE STRAND OF 18 GAGE TIE WIRE.

   c. MAIN RUNNERS SHALL BE SPLICED BY LAPPING IN ACCORDANCE WITH CG2.31.

   d. FURRING CHANNELS SHALL BE SPLICED BY LAPPING IN ACCORDANCE WITH CG2.31.

   e. MAIN RUNNERS AND FURRING CHANNELS ALONG WITH THEIR SPLICES, INTERSECTION CONNECTORS, AND EXPANSION DEVICES SHALL BE DESIGNED AND CONSTRUCTED TO CARRY A MEAN ULTIMATE TEST LOAD OF NOT LESS THAN 270 LBS. IN COMPRESSION & TENSION.

   f. HANGER AND BRACING WIRES SHALL BE #12 GAGE (0.106" DIAMETER), SOFT ANNEALED, AND GALVANIZED STEEL WIRES WITH CLASS 1 COATING. THEY MAY BE USED FOR UP TO AND INCLUDING 4'-0"x 4'-0" GRID SPACING ALONG AND ATTACHED TO MAIN RUNNERS. SPLICES ARE NOT PERMITTED IN ANY HANGER WIRE.

   g. WIRE HANGERS SHALL BE SADDLE-TIED AROUND MAIN RUNNERS SO AS TO PREVENT TURNING OR TWISING OF THE MEMBER.

11. SUSPENSION SYSTEM INSTALLATION SHALL COMPLY WITH ASTM C754:

   a. CEILING GRID MEMBERS SHALL BE ATTACHED TO TWO (2) ADJACENT WALLS. MAIN RUNNERS AND FURRING CHANNEL SHALL BE AT LEAST 1 INCH CLEAR OF OTHER WALL AND FURRING SHALL BE AT LEAST 3/4" CLEAR OF OTHER WALL. IF WALLS RUN DIAGONAL TO THE CEILING GRID SYSTEM RUNNERS, ONE END OF MAIN RUNNER AND FURRING SHOULD BE FREE WITH STANDARD CLEARANCES.

   b. THE WIDTH OF THE PERIMETER SUPPORTING CLOSURE ANGLE SHALL BE NOT LESS THAN TWO (2) INCHES. USE OF ANGLES WITH SMALLER WIDTHS IN CONJUNCTION WITH PERIMETER CLIPS SHALL REQUIRE AN ALTERNATE METHOD OF COMPLIANCE WITH ADEQUATE JUSTIFICATION AND ARE OUTSIDE THE SCOPE OF THIS OPD.

FOR CODE COMPLIANCE
OSHPD
OPD-0003-13
BY: M.R.Karim
OSHPD STRUCTURAL DIVISION
CALIFORNIA BUILDING CODE 2013

Section Title : OSHPD STANDARD GYPSUM BOARD CEILING DETAILS			OPD No:
Sheet Title : GYP-BOARD SUSPENDED CEILING PAGE 2 OF 5			CG0.01

12. EXPANSION JOINTS, SEISMIC SEPARATIONS, AND PENETRATIONS:

a. EXPANSION JOINTS SHALL BE PROVIDED IN THE CEILING AT INTERSECTIONS OF CORRIDORS AND AT JUNCTIONS OF CORRIDORS WITH LOBBIES OR OTHER SIMILAR AREAS.

b. FOR CEILING AREAS EXCEEDING 2500 SQUARE FEET, A SEISMIC SEPARATION JOINT SHALL BE PROVIDED TO DIVIDE THE CEILING INTO AREAS NOT EXCEEDING 2500 SQ. FT.

c. PENETRATIONS THROUGH THE CEILING FOR SPRINKLER HEADS AND OTHER SIMILAR DEVICES THAT ARE NOT INTEGRALLY TIED TO THE CEILING SYSTEM IN THE LATERAL DIRECTION SHALL HAVE A TWO (2) INCH OVERSIZED RING, SLEEVE OR ADAPTER THROUGH THE CEILING TILE TO ALLOW FREE MOVEMENT OF ONE (1) INCH IN ALL HORIZONTAL DIRECTIONS. A FLEXIBLE SPRINKLER HOSE FITTING THAT CAN ACCOMMODATE ONE (1) INCH OF CEILING MOVEMENT SHALL BE PERMITTED TO BE USED IN LIEU OF THE OVERSIZED RING, SLEEVE OR ADAPTER. SUCH FLEXIBLE SPRINKLER HOSE SHALL BE ADEQUATELY SUPPORTED FROM SOFFIT SO AS NOT TO EXCEED THE MAXIMUM TRIBUTARY WEIGHT OF THE CEILING.

13. LATERAL FORCE BRACING:

LATERAL FORCE BRACING IS REQUIRED IN ACCORDANCE WITH THIS SECTION FOR ALL CEILING AREAS, UON.

EXCEPTION: LATERAL FORCE BRACING MAY BE OMITTED FOR SUSPENDED ACOUSTICAL CEILING SYSTEMS WITH A CEILING AREA OF 144 SQ. FT. OR LESS, WHEN PERIMETER SUPPORT ARE PROVIDED AND PERIMETER WALLS ARE DESIGNED TO CARRY THE CEILING LATERAL FORCES.

a. PROVIDE LATERAL-FORCE BRACING ASSEMBLIES CONSISTING OF A STRUT AND FOUR (4) #12 GAGE BRACING WIRES ORIENTED 90 DEGREES FROM EACH OTHER.

b. LATERAL-FORCE BRACING ASSEMBLIES SHALL BE SPACED IN ACCORDANCE WITH CG2.20 THROUGH CG2.22 AND CG2.30 FROM EACH WALL AND AT THE EDGES OF ANY CHANGE OF ELEVATION OF THE CEILING.

c. THE SLOPE OF BRACING WIRES MAY BE FROM 10 TO 45 DEGREES BUT MAY NOT EXCEED 45 DEGREES FROM THE PLANE OF THE CEILING AND WIRES SHALL BE TAUT.

d. STRUTS SHALL BE ADEQUATE TO RESIST THE VERTICAL COMPONENT INDUCED BY THE BRACING WIRES, AND SHALL NOT BE MORE THAN 1 (HORIZONTAL) IN 6 (VERTICAL) OUT OF PLUMB.

14. ATTACHMENT OF HANGER AND BRACING WIRES:

a. FASTEN #12 HANGER WIRES WITH NOT LESS THAN THREE (3) TIGHT TURN IN 3 INCHES. HANGER WIRE LOOPS SHALL BE TIGHTLY WRAPPED AND SHARPLY BENT TO PREVENT ANY VERTICAL MOVEMENT OR ROTATION OF THE MEMBER WITHIN THE LOOPS.

b. FASTEN #12 BRACING WIRES WITH FOUR (4) TIGHT TURNS. MAKE ALL TIGHT TURNS WITHIN A DISTANCE OF 1 1/2" INCHES.

c. HANGER OR BRACING WIRE ANCHORED TO THE STRUCTURE SHOULD BE INSTALLED IN SUCH A MANNER THAT THE DIRECTION OF THE ANCHOR ALIGNS AS CLOSELY AS POSSIBLE WITH THE DIRECTION OF THE WIRE.

d. SEPARATE ALL CEILING HANGER AND BRACING WIRES AT LEAST SIX (6) INCHES FROM ALL UNBRACED DUCTS, PIPES CONDUITS, ETC.

e. HANGER WIRES SHALL NOT BE ATTACHED TO OR BEND AROUND INTERFERING MATERIAL OR EQUIPMENT. PROVIDE TRAPEZE OR OTHER SUPPLEMETARY SUPPORT MEMBERS AT OBSTRUCTIONS TO TYPICAL HANGER SPACING. PROVIDE ADDITIONAL HANGERS, STRUTS OR BRACES AS REQUIRED AT ALL CEILING BREAKS, SOFFITS, OR DISCONTINUOUS AREAS.

f. HANGER WIRES THAT ARE MORE THAN 1 (HORIZONTAL) IN 6 (VERTICAL) OUT OF PLUMB SHALL REQUIRE PROJECT SPECIFIC DESIGN.

g. WHEN DRILLED-IN CONCRETE ANCHORS OR PAF ARE USED IN REINFORCED CONCRETE FOR HANGER WIRES, 1 OUT OF 10 WIRE/ANCHOR ASSEMBLIES SHALL BE FIELD TESTED FOR 200 LBS. IN TENSION. WHEN DRILLED-IN CONCRETE ANCHORS ARE USED FOR BRACING WIRES, 1 OUT OF 2 WIRE/ ANCHOR ASSEMBLIES SHALL BE FIELD TESTED FOR 440 LBS. IN TENSION IN THE DIRECTION OF THE WIRE. PAF IN CONCRETE ARE NOT PERMITTED FOR BRACING WIRES.

REVIEWED FOR CODE COMPLIANCE
OSHPD
OPD 0003-13
CALIFORNIA BUILDING CODE 2013
Reviewed by M.R.Karim
DATE: 12/10/2013

Section Title : OSHPD STANDARD GYPSUM BOARD CEILING DETAILS			OPD No:
Sheet Title : GYP-BOARD SUSPENDED CEILING PAGE 3 OF 5			CG0.02

15. CEILING FIXTURES, TERMINALS, AND DEVICES:

    a. ALL LIGHT FIXTURES, AIR TERMINALS/GRILLS, OR OTHER DEVICES (REFERRED TO ALL BY COMMON TERM FIXTURES HEREAFTER) SHALL BE MOUNTED IN A MANNER THAT WILL NOT COMPROMISE CEILING PERFORMANCE.

    b. ALL FIXTURES SHALL BE SUPPORTED DIRECTLY BY MAIN RUNNERS OR BY SUPPLEMENTAL FRAMING WHICH IS SUPPORTED BY MAIN RUNNERS AND POSITIVELY ATTACHED WITH SCREWS OR OTHER APPROVED CONNECTORS.

    c. SURFACE MOUNTED FIXTURES SHALL BE ATTACHED TO A MAIN RUNNER WITH A POSITIVE CLAMPING DEVICE MADE OF MATERIAL WITH A MINIMUM OF 14 GAGE. ROTATIONAL SPRING CLAMPS DO NOT COMPLY.

    d. ACCESS PANELS: ACCESS TO THE SPACE BETWEEN THE CEILING AND THE FLOOR OR ROOF ABOVE SHALL NOT BE ALLOWED. SMALL ACCESS PANELS FOR THE INSPECTION, ADJUSTMENT, OR REPAIR OF UTILITY SWITCHES, VALVES, SENSORS, ETC. MAY BE ALLOWED IF THE PANEL IS LESS THAN 300 SQUARE INCHES. SUCH PANELS SHALL ALSO HAVE A PERMANENT WARNING LABEL AS FOLLOWS:

        WARNING: 1. DO NOT CLIMB, WALK, OR CRAWL ON THE GYPSUM BOARD CEILING.
        2. DO NOT STORE OR STOW ANYTHING ON THE GYPSUM BOARD CEILING.

    e. ALL FIXURES WEIGHING LESS THAN OR EQUAL TO 10 LB. SHALL HAVE ONE NO. 12 GAUGE SAFETY WIRE CONNECTED FROM FIXURE HOUSING TO STRUCTURE ABOVE. IT IS NOT NECESSARY FOR THESE SAFETY WIRES TO BE TAUT.

    f. ALL FIXURES WEIGHING GREATER THAN 10 LB BUT LESS THAN OR EQUAL TO 56 LB. SHALL HAVE TWO NO. 12 GAUGE SAFETY WIRE CONNECTED FROM FIXURE HOUSING TO STRUCTURE ABOVE. IT IS NOT NECESSARY FOR THESE SAFETY WIRES TO BE TAUT.

    g. ALL FIXURES WEIGHING GREATER THAN 56 LB. SHALL BE SUPPORTED DIRECTLY FROM STRUCTURE ABOVE BY APPROVED HANGERS.

    h. PENDENT-HUNG FIXTURES SHALL BE SUPPORTED DIRECTLY FROM THE STRUCTURE ABOVE USING NO LESS THAN N0. 9-GAUGE WIRE OR AN APPROVED ALTERNATE SUPPORT. THE CEILING SUSPENSION SYSTEM SHALL NOT PROVIDE ANY DIRECT SUPPORT.

    i. ALL RECESSED OR DROP-IN FIXURES SHALL BE SUPPORTED DIRECTLY FROM FIXTURE HOUSING TO THE STRUCTURE ABOVE WITH A MINIMUM OF TWO NO. 12 GAUGE WIRES LOCATED AT DIAGONALLY OPPOSITE CORNERS. LEVELLING OR POSITIONING OF FIXURES MAY BE PROVIDED BY CEILING GRID. FIXTURE SUPPORT WIRES MAY BE SLIGHTLY LOOSE TO ALLOW THE FIXTURE TO SEAT IN THE GRID SYSTEM. FIXTURES SHALL NOT BE SUPPORTED FROM MAIN RUNNERS OR FURRING CHANNELS IF THE WEIGHT OF THE FIXURES CAUSES TOTAL DEAD LOAD TO EXCEED THE DEFLECTION CAPABILITY OF THE CEILING SUSPENSION SYSTEM.

16. CEILINGS THAT ARE PART OF A FIRE RATED ASSEMBLY: PROVIDE A DETAIL AND DESIGN NUMBER FOR RATED CEILING ASSEMBLIES FROM AN APPROVED TESTING AGENCY. THE COMPONENTS AND INSTALLATION DETAILS SHALL CONFORM IN EVERY RESPECT WITH THE LISTED DETAIL AND NUMBER. DETAILS SHALL CLEARLY DEPICT ALL COMPONENTS, INCLUDING INSULATION MATERIALS, FRAMING AND ATTACHMENT OF THE DESIGN SO THAT THE ASSEMBLY CAN BE CONSTRUCTED AND INSPECTED ACCORDINGLY. POP RIVETS, SCREWS, OR OTHER ATTACHMENTS ARE NOT ACCEPTABLE UNLESS SPECIFICALLY DETAILED ON THE DRAWINGS AND APPROVED BY OSHPD.

REVIEWED FOR CODE COMPLIANCE
OSHPD
OPD-0003-13
APPROVED

Section Title : OSHPD STANDARD GYPSUM BOARD CEILING DETAILS			OPD No:
Sheet Title : GYP-BOARD SUSPENDED CEILING PAGE 4 OF 5			CG0.03

17. GYPSUM BOARD INSTALLATION SHALL COMPLY WITH ASTM C840-11:

    a. GYPSUM BOARD SHALL CONSIST OF SINGLE-PLY ½" OR 5/8" THICK IN ACCORDANCE WITH ASTM C11-10a.

    b. GYPSUM BOARD SHALL BE INSTALLED PERPENDICULAR TO FURRING WITH SCREWS AT 12" ON CENTER MAXIMUM, IN ACCORDANCE WITH ASTM C840-11.

    c. GYPSUM BOARD SHALL BE ATTACHED TO FURRING/FRAMING WITH ASTM C1002-07 TYPE S (ASTM A568-11b GRADES 1018 TO 1022) SCREWS (NOT LESS THAN, N0. 6, WITH MAJOR DIAMETER NOT LESS THAN 0.136 IN).

REVIEWED FOR CODE COMPLIANCE
oshpd
OPD-0003-13
BY: M.R.Karim
DATE: 12/10/2013
CALIFORNIA BUILDING CODE, 2013

Section Title : OSHPD STANDARD GYPSUM BOARD CEILING DETAILS		OPD No:
Sheet Title : GYP-BOARD SUSPENDED CEILING PAGE 5 OF 5		CG0.04

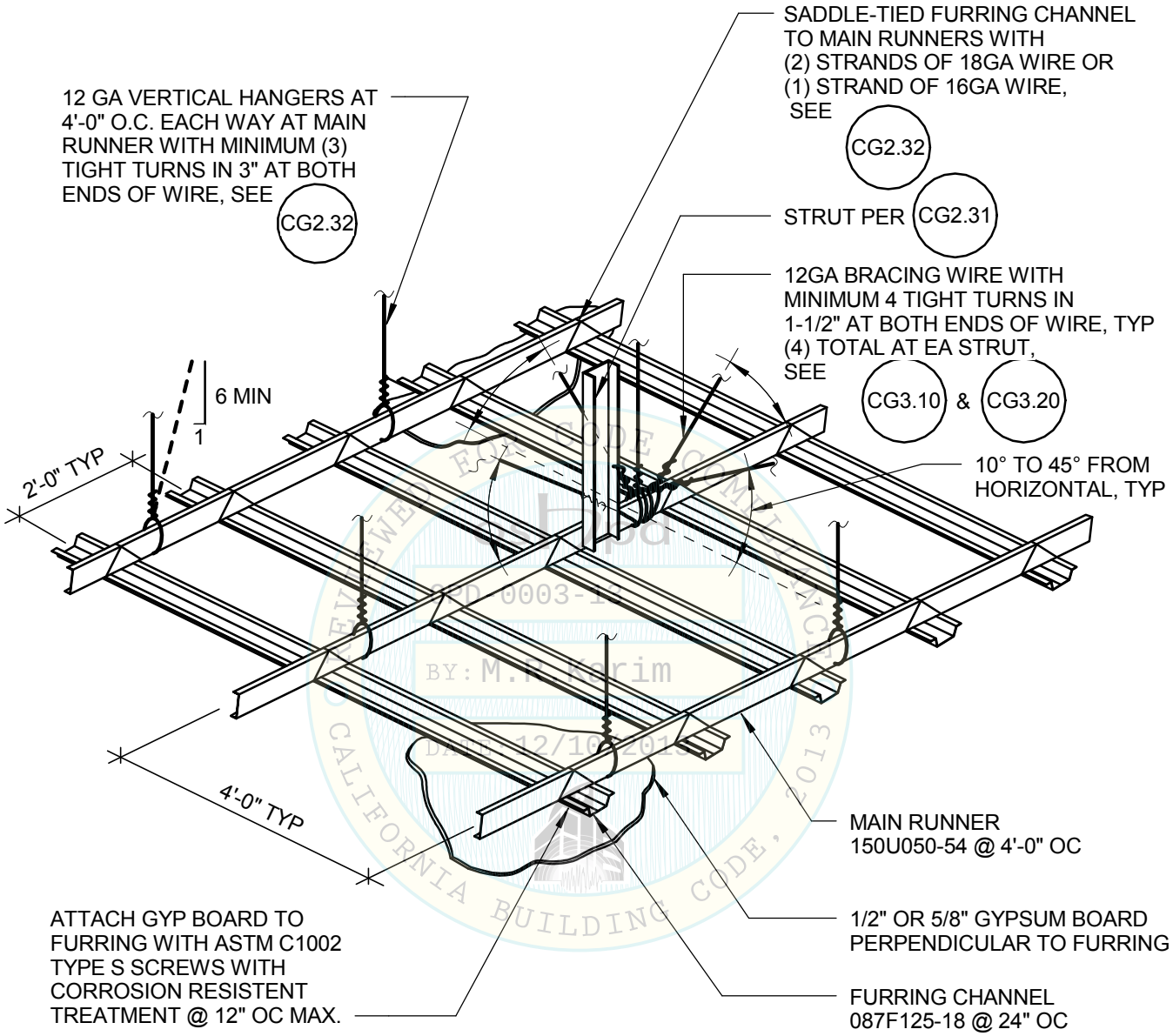

REVIEWED FOR CODE COMPLIANCE
OPD-0003-13
BY: M.R. Karim
DATE: 12/10/2013
CALIFORNIA BUILDING CODE, 2013

NOTES:

1. SEE GENERAL NOTES #13 & #14 ON CG0.02
2. STRUTS SHALL NOT REPLACE HANGER WIRES.
3. FOR CONDITIONS AT CORRIDOR SEE DRAWING NO. CG2.30
4. FOR MAIN RUNNER AND FURRING CHANNEL SPLICE CONNECTIONS, SEE CG2.31

Section Title : OSHPD STANDARD GYPSUM BOARD CEILING DETAILS	OPD No:
Sheet Title : SUSPENDED CEILING BRACING ASSEMBLY	CG2.10

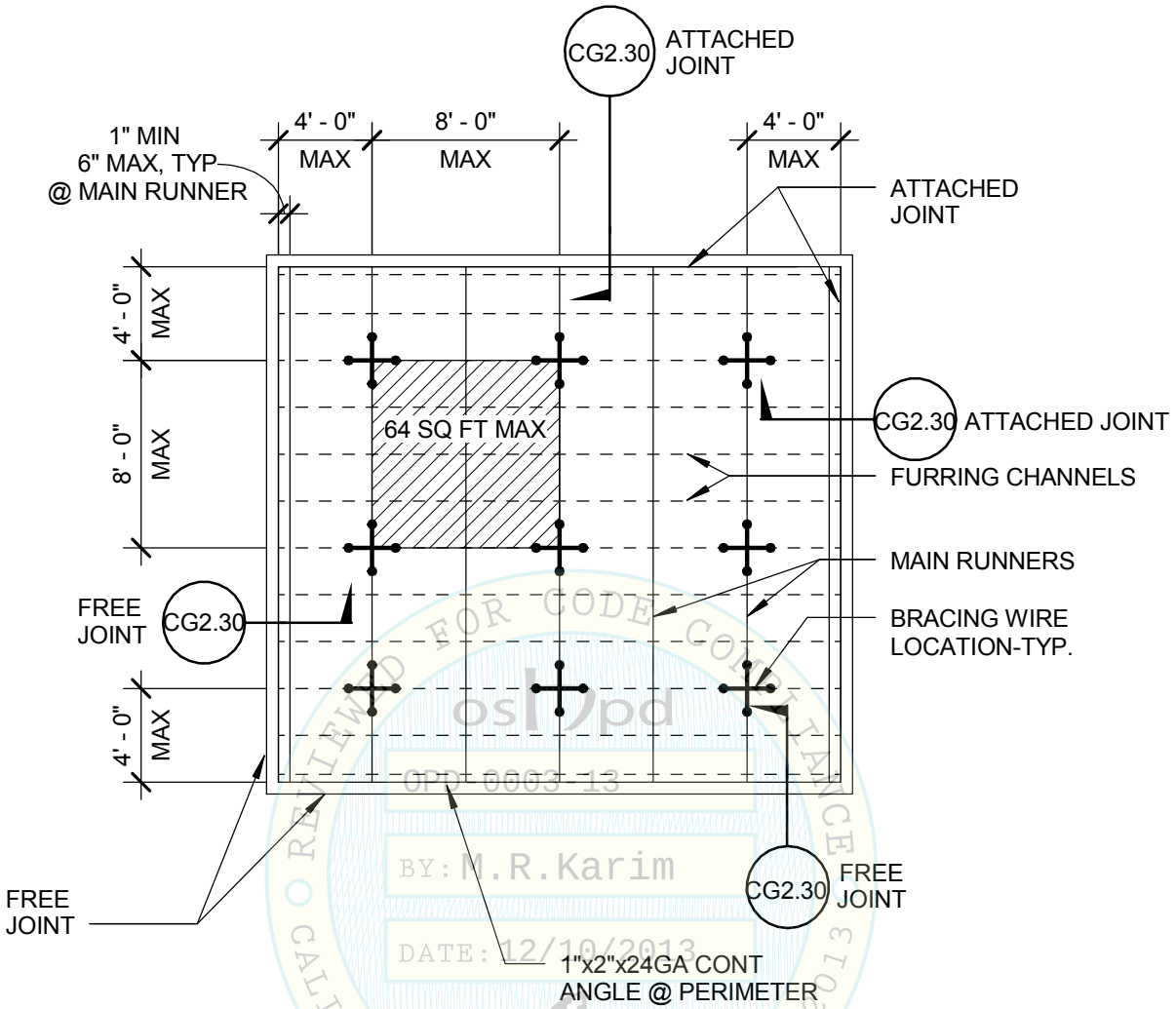

REVIEWED FOR CODE COMPLIANCE
oshpd
OPD-0003-13
BY: M.R.Karim
DATE: 12/10/2013
CALIFORNIA BUILDING CODE, 2013

NOTE:

BRACING WIRES AND COMP. STRUT SHALL OCCUR AT EVERY 64 SQ. FT. MAX. IN ROOMS OVER 64 SQ. FT.

Section Title : OSHPD STANDARD GYPSUM BOARD CEILING DETAILS		OPD No:
Sheet Title : TYPICAL CEILING PLAN FOR $1.73 < S_{DS} \leq 2.50$ AND z/h <= 1.0		CG2.20

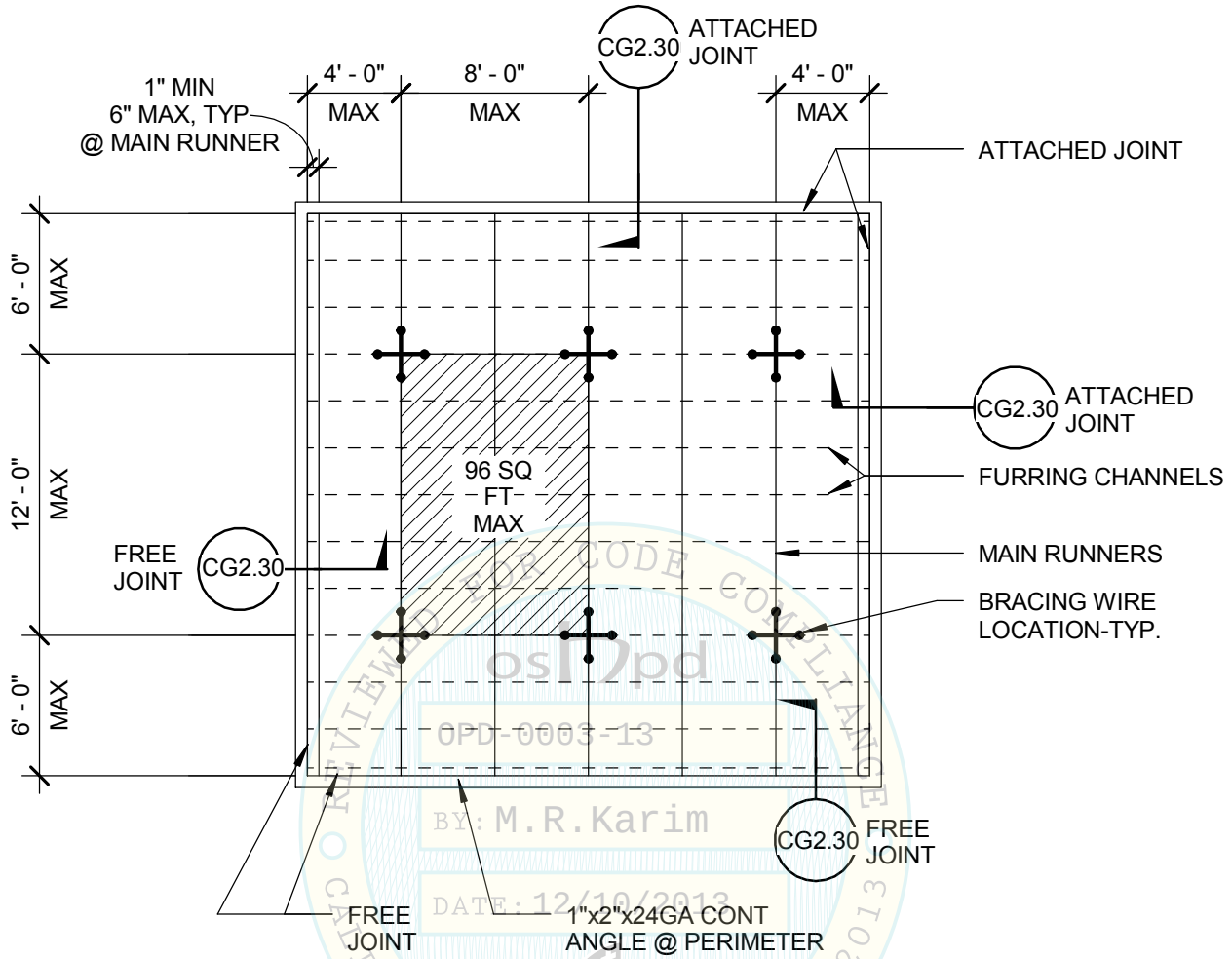

OSHPD
OPD-0003-13
BY: M.R.Karim
DATE: 12/10/2013
FIRE CODE COMPLIANCE
CALIFORNIA BUILDING CODE, 2013

NOTE:

BRACING WIRES AND COMP. STRUT SHALL OCCUR
AT EVERY 96 SQ. FT. MAX. IN ROOMS OVER 96 SQ. FT.

Section Title : OSHPD STANDARD GYPSUM BOARD CEILING DETAILS	OPD No:
Sheet Title : TYPICAL CEILING PLAN FOR $1.15 < S_{DS} \leq 1.73$ AND z/h <= 1.0	CG2.21

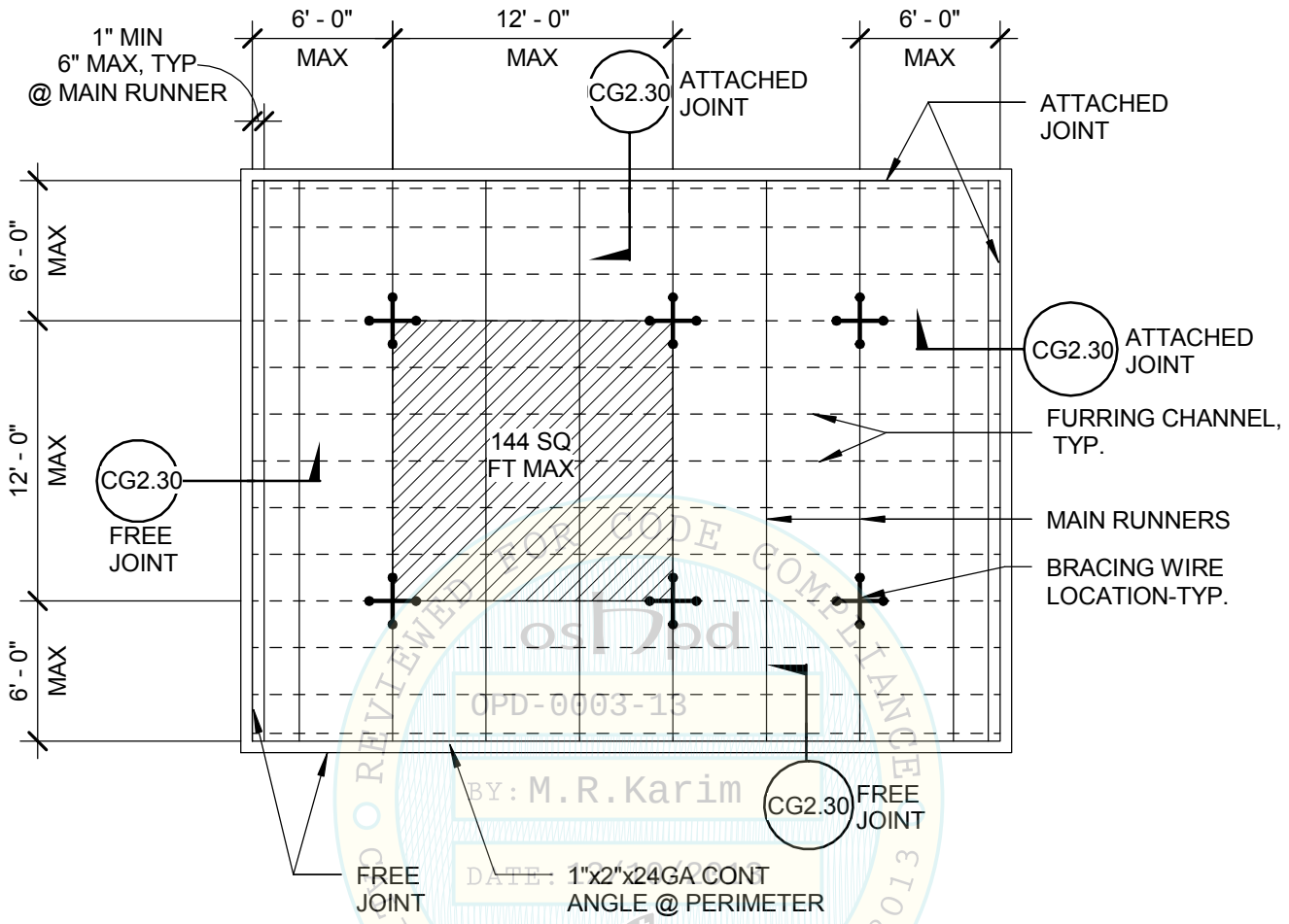

REVIEWED FOR CODE COMPLIANCE
OPD-0003-13
BY: M.R.Karim
DATE: 12/10/2013
CALIFORNIA BUILDING CODE, 2013

NOTE:

BRACING WIRES AND COMP. STRUT SHALL OCCUR
AT EVERY 144 SQ. FT. MAX. IN ROOMS OVER 144 SQ. FT.

Section Title : OSHPD STANDARD GYPSUM BOARD CEILING DETAILS	OPD No:
Sheet Title : TYPICAL CEILING PLAN FOR $S_{DS} \leq 1.15$ AND z/h <= 1.0	CG2.22

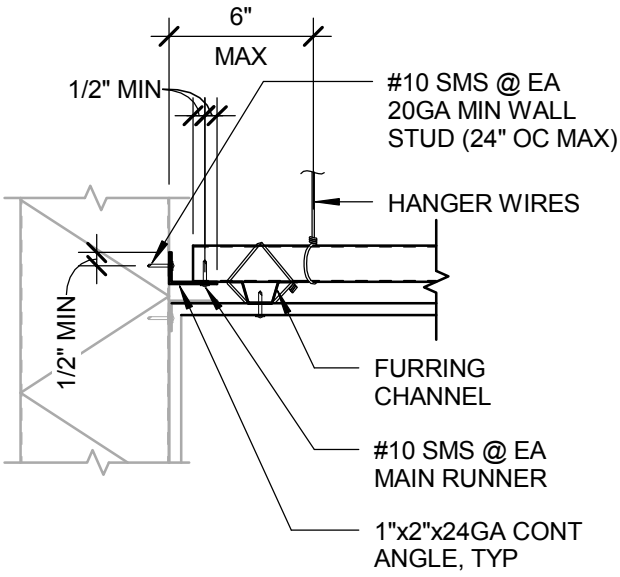

ATTACHED JOINT

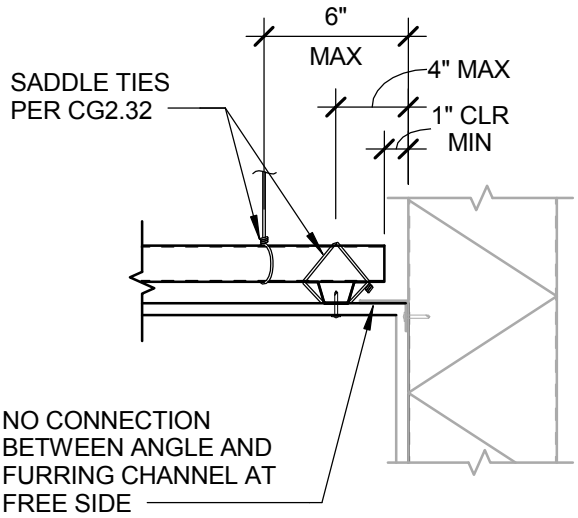

NOTE: FOR CONN. TO WALL, SEE ATTACHED JOINT.

FREE JOINT

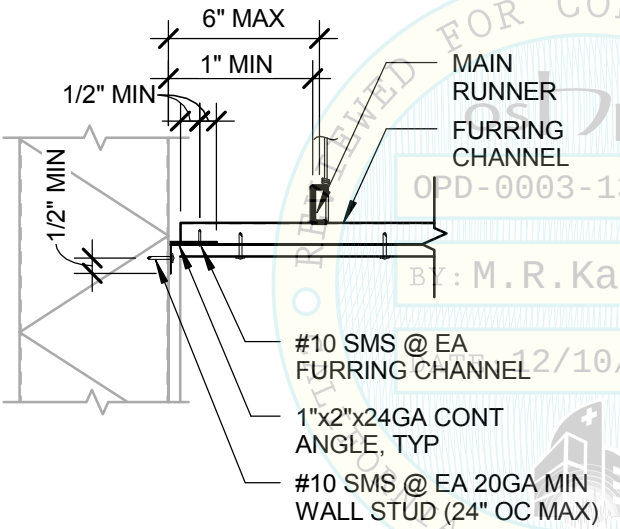

ATTACHED JOINT

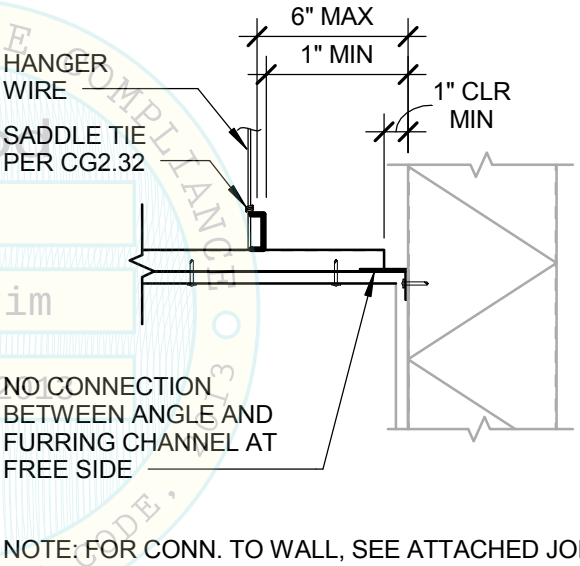

NOTE: FOR CONN. TO WALL, SEE ATTACHED JOINT.

FREE JOINT

REVIEWED FOR CODE COMPLIANCE
OSHPD
OPD-0003-13
BY: M.R.Karim
DATE 12/10/2013
CALIFORNIA BUILDING CODE, 2013

NOTES:

1. PERIMETER WALLS SHALL BE DESIGNED TO CARRY TRIBUTARY LATERAL FORCES PER TABLE BELOW. RDP TO VERIFY. RDP TO SPECIFY CONNECTION OF BACKING TO STUDS

S_{DS} (g)	Fp
$S_{DS} \leq 1.15$	9.3 plf
$1.15 < {}_{DS} \leq 1.73$	14.0 plf
$1.73 < S_{DS} \leq 2.50$	20.9 plf

Section Title : OSHPD STANDARD GYPSUM BOARD CEILING DETAILS	OPD No:
Sheet Title : CEILING PERIMETER	CG2.30

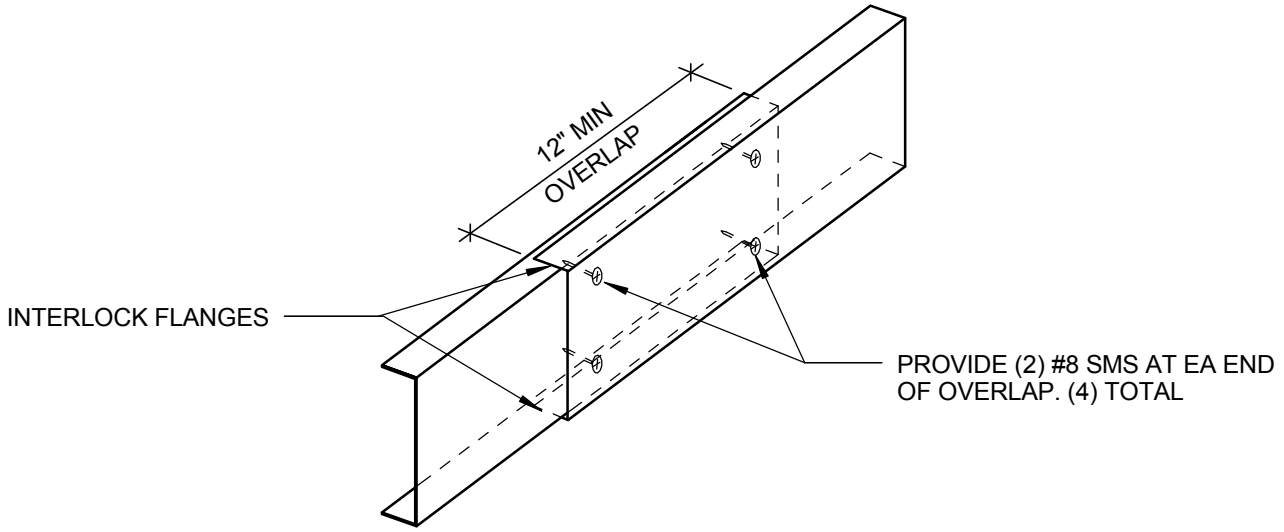

MAIN RUNNER SPLICE

REVIEWED FOR CODE COMPLIANCE
oshpd
OPD-0003-13
BY: M.R.Karim
DATE: 12/10/2013
CALIFORNIA BUILDING CODE 2013

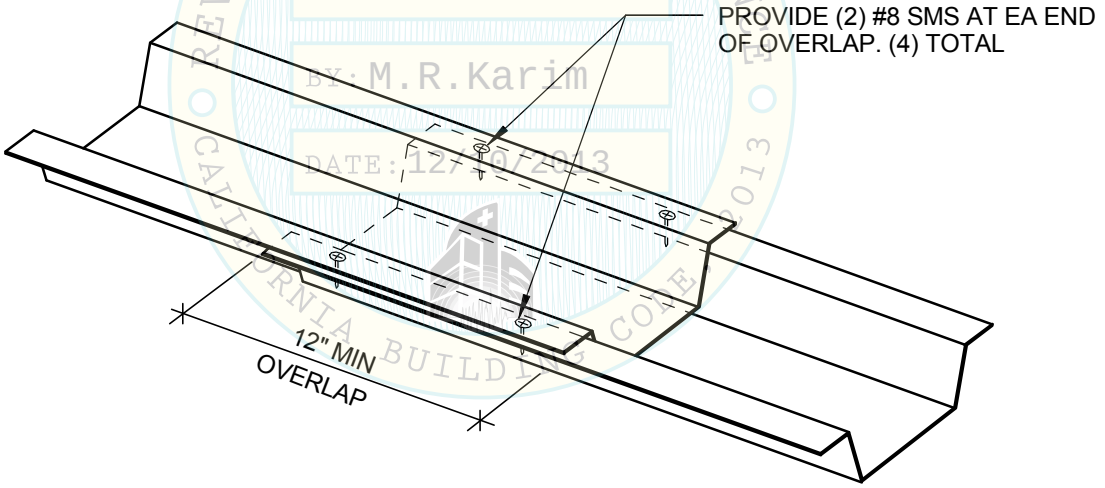

FURRING CHANNEL SPLICE

Section Title : OSHPD STANDARD GYPSUM BOARD CEILING DETAILS		OPD No:
Sheet Title : SPLICE DETAILS		CG2.31

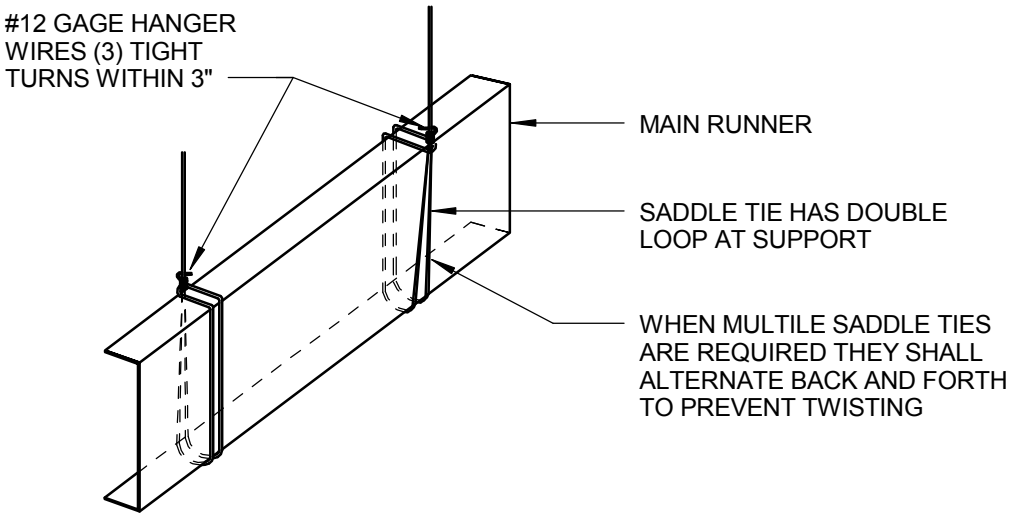

SADDLE TIE AT MAIN RUNNER TO HANGER WIRE

REVIEWED FOR CODE COMPLIANCE
oshpd
OPD-0003-13
BY: M.R.Karim
DATE: 12/10/2013
CALIFORNIA BUILDING CODE, 2013

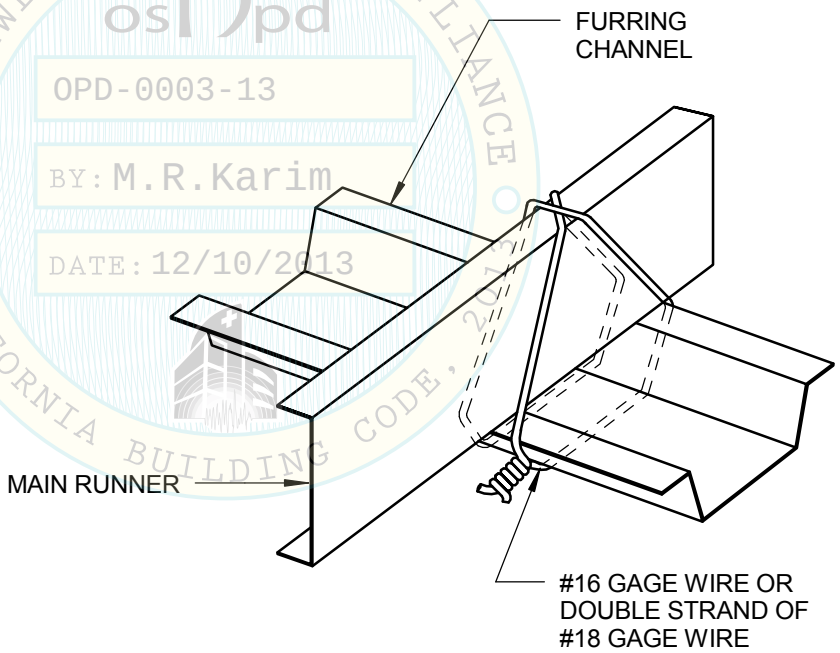

SADDLE TIE AT FURRING CHANNEL TO MAIN RUNNER

NOTE:
REFERENCE ASTM C754 FIGURES 5 & 13

Section Title : OSHPD STANDARD GYPSUM BOARD CEILING DETAILS		OPD No:
Sheet Title : SADDLE TIE DETAILS		CG2.32

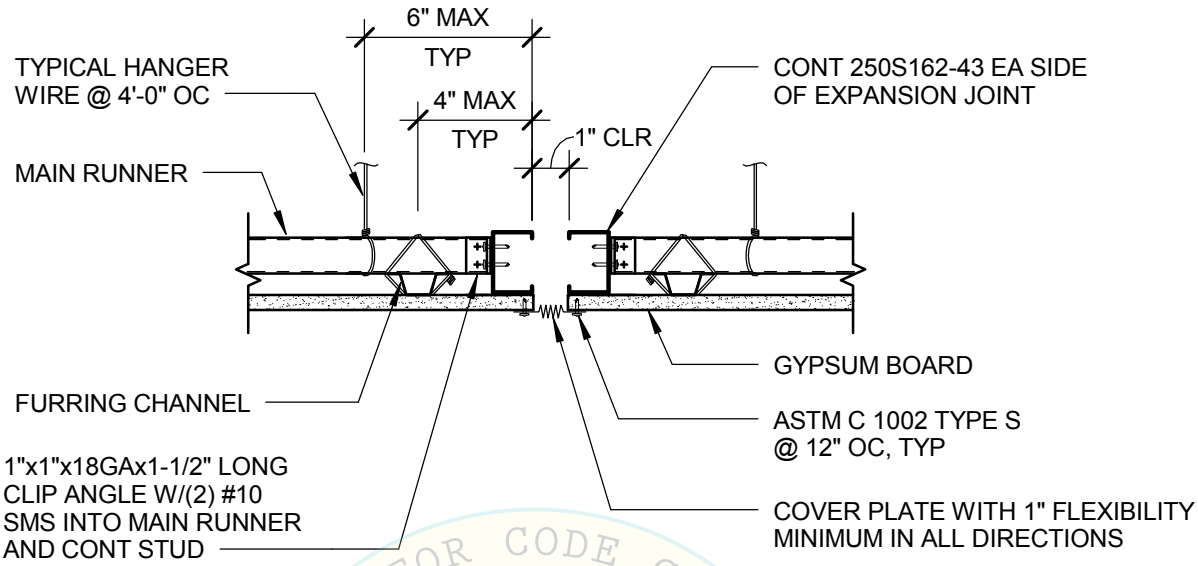

EXPANSION JOINT PARALLEL TO FURRING CHANNEL

REVIEWED FOR CODE COMPLIANCE
OPD-0003-13
BY: M.R.Karim
DATE: 12/10/2013
CALIFORNIA BUILDING CODE, 2013

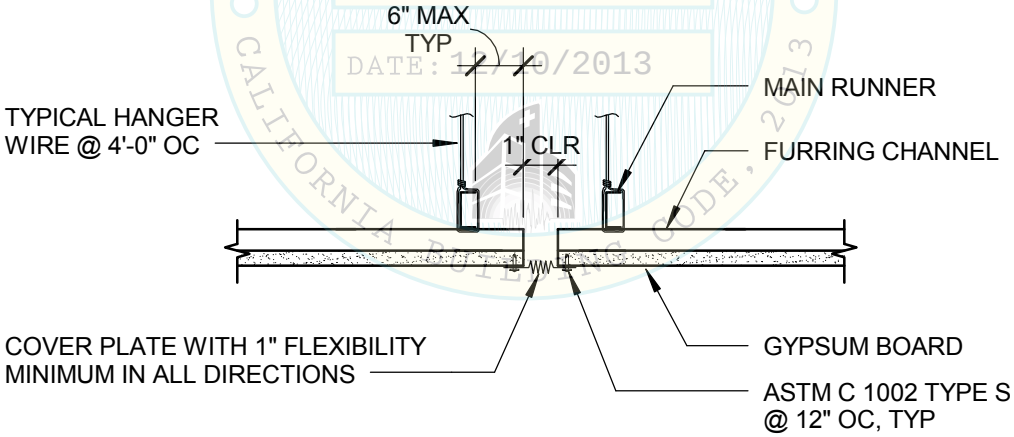

EXPANSION JOINT PARALLEL TO MAIN RUNNER

Section Title : OSHPD STANDARD GYPSUM BOARD CEILING DETAILS		OPD No:
Sheet Title : EXPANSION JOINT AT INTERSECTIONS		CG2.40

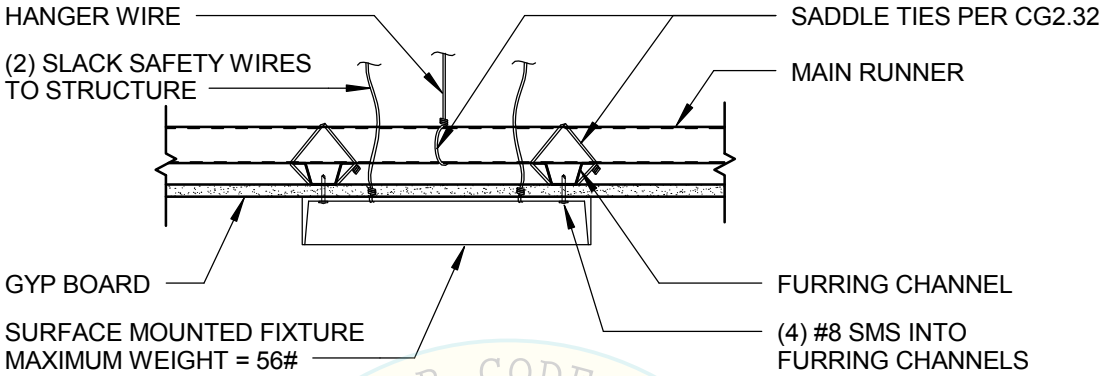

REVIEWED FOR CODE COMPLIANCE
oshpd
OPD-0003-13
BY: M.R.Karim
DATE: 12/10/2013
CALIFORNIA BUILDING CODE, 2013

Section Title : OSHPD STANDARD GYPSUM BOARD CEILING DETAILS		OPD No:
Sheet Title : SURFACE MOUNTED FIXTURE		CG2.70

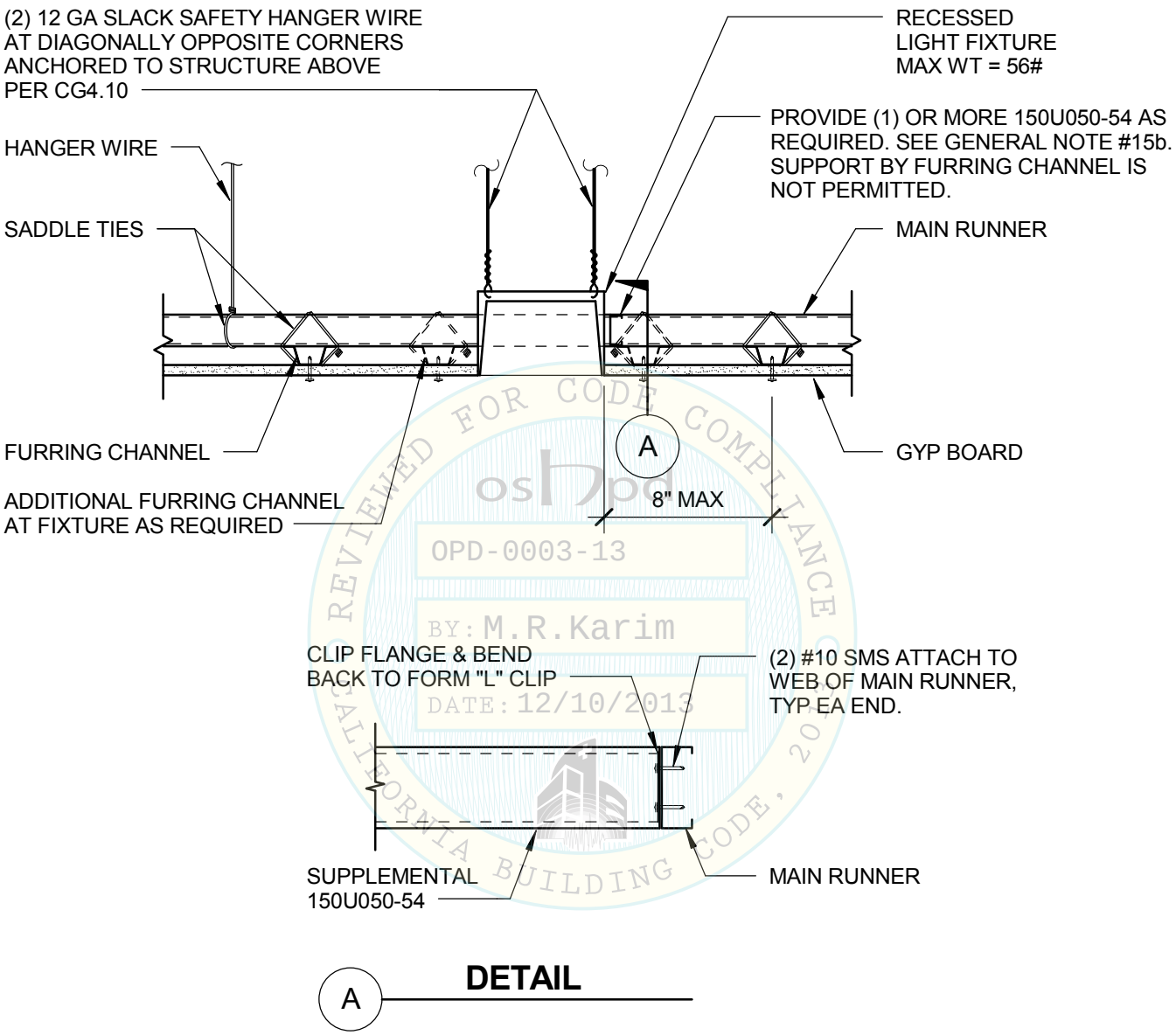

REVIEWED FOR CODE COMPLIANCE
OSHPD
OPD-0003-13
BY: M.R.Karim
DATE: 12/10/2013
CALIFORNIA BUILDING CODE, 2013

A **DETAIL**

NOTE:

IF THE MAIN RUNNER IS CUT DUE TO FIXTURES, RDP SHALL SPECIFY ADDITIONAL HANGER WIRES AND/OR BRACING WIRES, AS REQUIRED TO MAINTAIN STRUCTURAL INTEGRITY.

Section Title : OSHPD STANDARD GYPSUM BOARD CEILING DETAILS		OPD No:
Sheet Title : RECESSED LIGHT FIXTURE		CG2.71

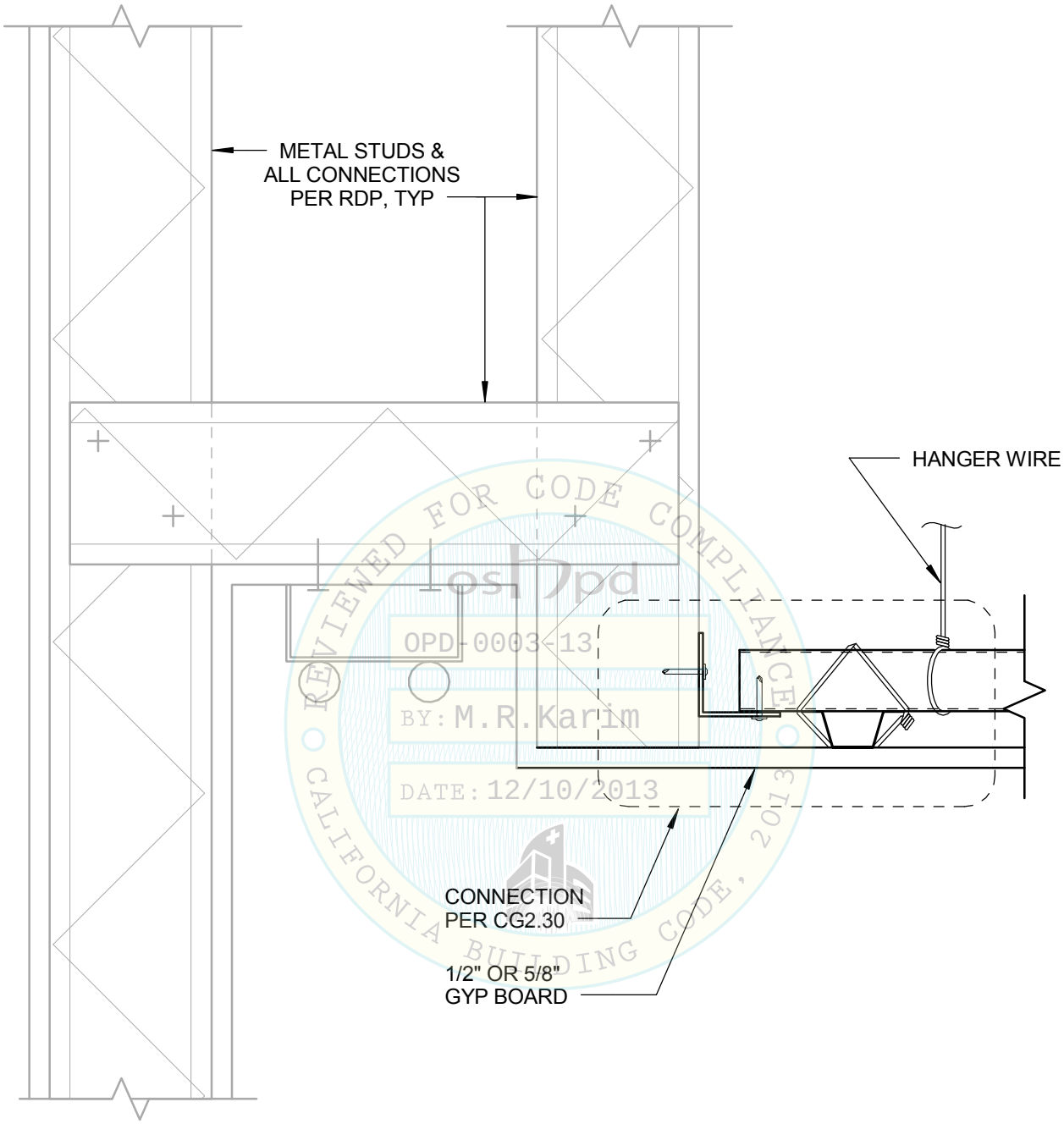

REVIEWED FOR CODE COMPLIANCE
CALIFORNIA BUILDING CODE, 2013
oshpd
OPD-0003-13
BY: M.R.Karim
DATE: 12/10/2013

Section Title : OSHPD STANDARD GYPSUM BOARD CEILING DETAILS		OPD No:
Sheet Title : RECESSED COVE LIGHT FIXTURE		CG2.72

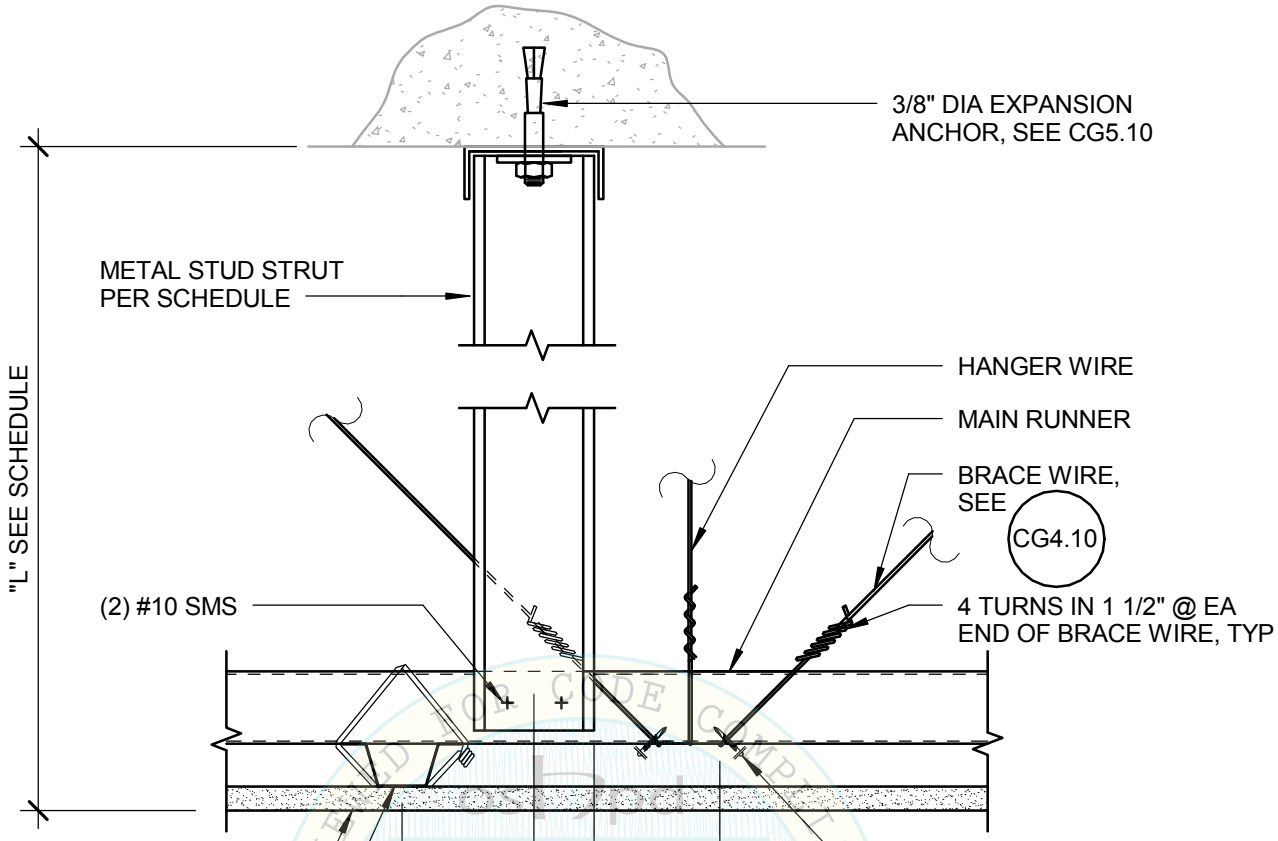

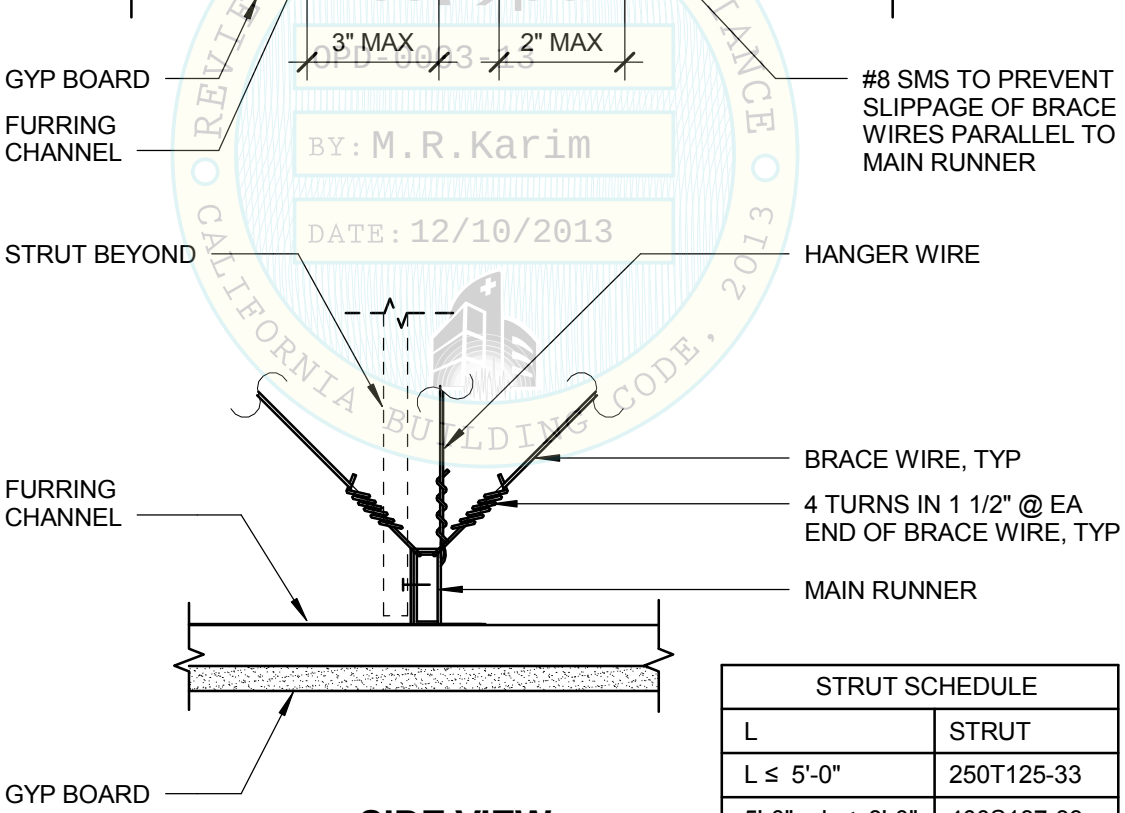

SIDE VIEW

STRUT SCHEDULE	
L	STRUT
L ≤ 5'-0"	250T125-33
5'-0" < L ≤ 8'-0"	400S137-33

REVIEWED FOR CODE COMPLIANCE
OSHPD
OPD-0003-13
BY: M.R.Karim
DATE: 12/10/2013
CALIFORNIA BUILDING CODE, 2013

Section Title : OSHPD STANDARD GYPSUM BOARD CEILING DETAILS	OPD No:
Sheet Title : STRUT & BRACING WIRE ASSEMBLY - METAL STUD TYPE STRUT	CG3.10

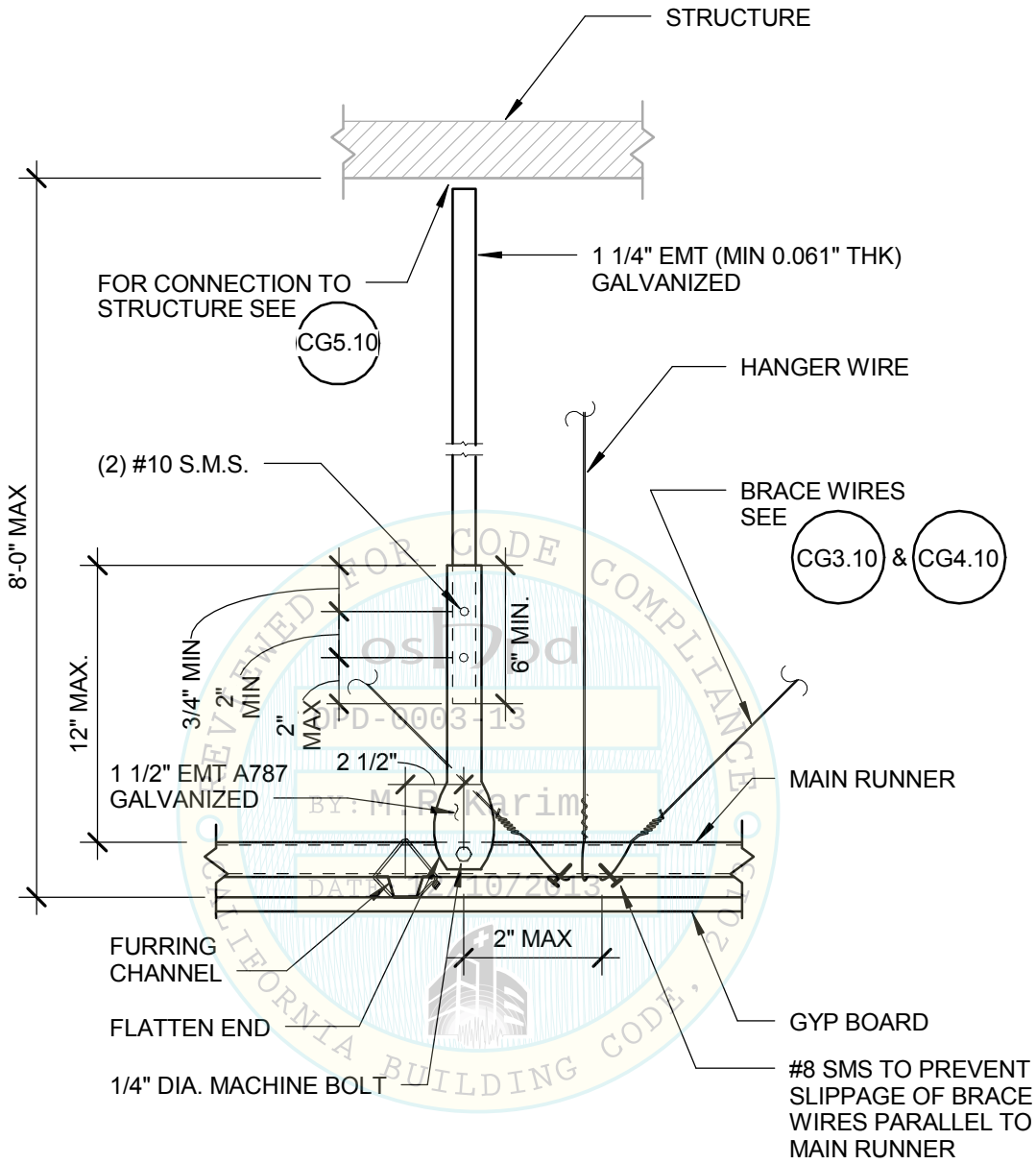

NOTE: FOR INFORMATION NOT SHOWN, SEE CG2.10 AND CG3.10

Section Title : OSHPD STANDARD GYPSUM BOARD CEILING DETAILS		OPD No:
Sheet Title : STRUT & BRACING WIRE ASSEMBLY - TUBE TYPE STRUT		CG3.20

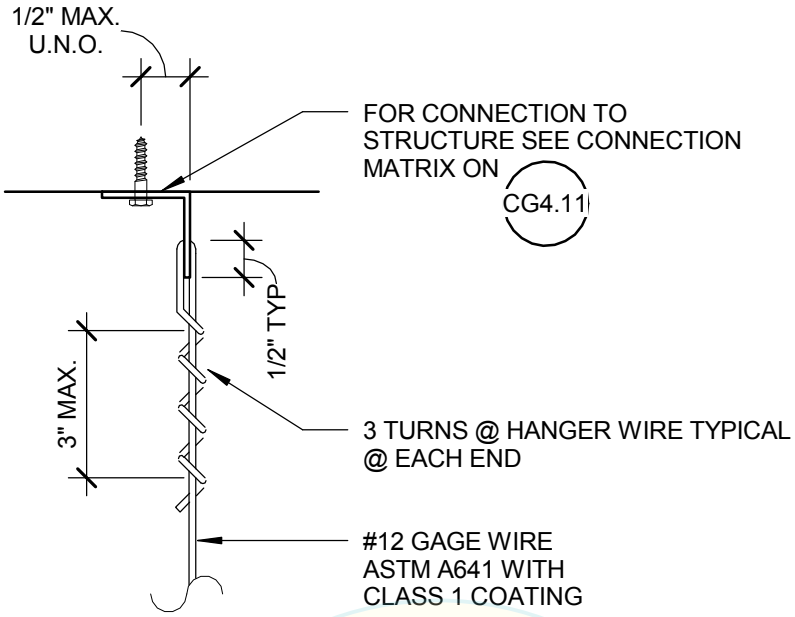

HANGER WIRE

REVIEWED FOR CODE COMPLIANCE
OSHPD
OPD-0003-13
BY: M. R. Karim
DATE: 12/10/2013
CALIFORNIA BUILDING CODE, 2013

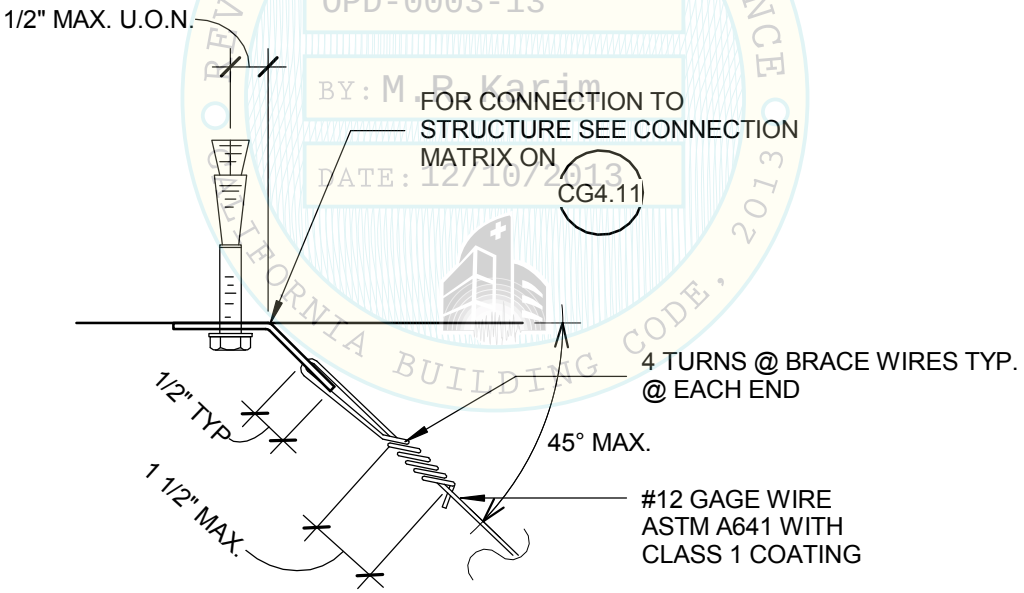

BRACING WIRE

Section Title : OSHPD STANDARD GYPSUM BOARD CEILING DETAILS		OPD No:
Sheet Title : HANGER AND BRACE WIRE CONNECTION - TYPICAL WIRE TURNS		CG4.10

STRUCTURAL CONDITION OF FLOOR/ ROOF ABOVE SUSPENDED CEILING	APPLICABLE HANGER WIRE DETAIL	APPLICABLE BRACING WIRE DETAIL
CONCRETE OVER METAL DECK	CG4.21	CG4.31
CONCRETE SLAB, BEAM, OR JOIST	CG4.22	CG4.32
STRUCTURAL STEEL	CG4.23	CG4.33
SAWN TIMBER	CG4.24	CG4.34
METAL STUD WALL	CG4.25	CG4.35

REVIEWED FOR CODE COMPLIANCE
oshpd
OPD-0003-13
BY: M.R.Karim
DATE: 12/10/2013
CALIFORNIA BUILDING CODE, 2013

Section Title : OSHPD STANDARD GYPSUM BOARD CEILING DETAILS

OPD No:

Sheet Title : HANGER AND BRACING WIRE CONNECTION MATRIX

CG4.11

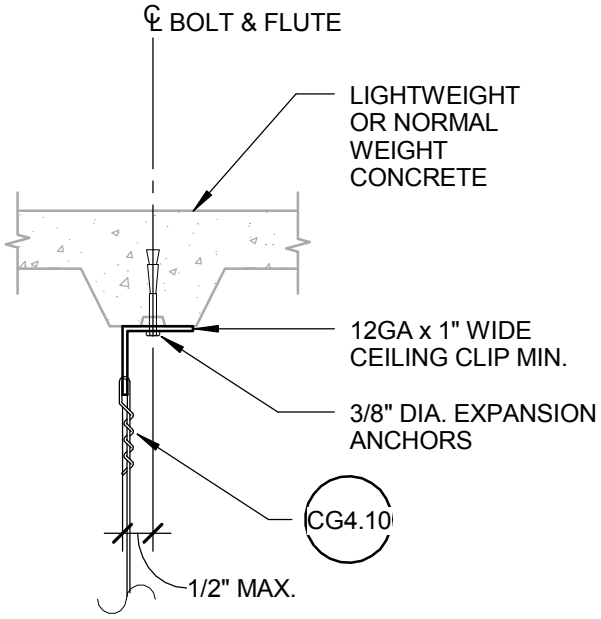

OPTION 1

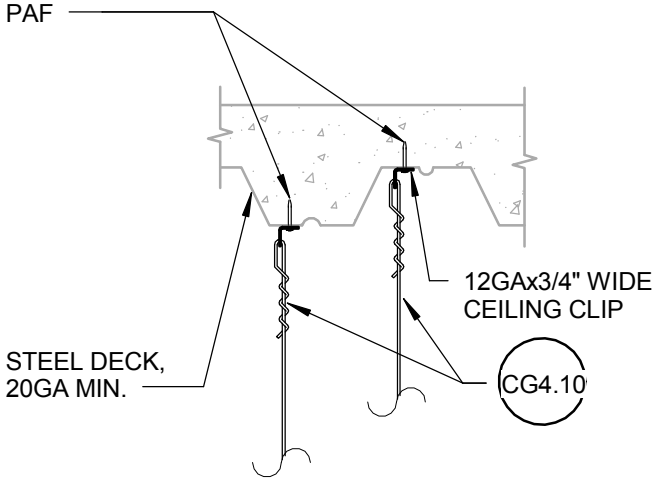

OPTION 2

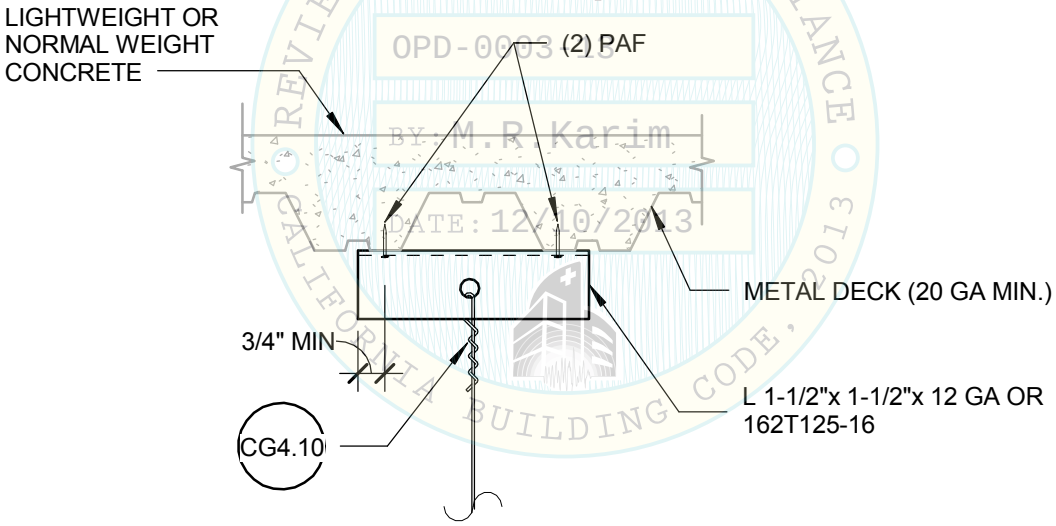

OPTION 3

REVIEWED FOR CODE COMPLIANCE
oshpd
OPD-0003-13
BY: M.R.Karim
DATE: 12/10/2013
CALIFORNIA BUILDING CODE, 2013

NOTES:

1. LOAD TEST IN ACCORDANCE WITH GENERAL NOTE 14(g), PAGE CG0.02 SHALL BE REQUIRED

2. REFER TO CG4.10 FOR ADDITIONAL DETAILS

Section Title : OSHPD STANDARD GYPSUM BOARD CEILING DETAILS		OPD No:
Sheet Title : HANGER WIRE - CONCRETE OVER METAL DECK		CG4.21

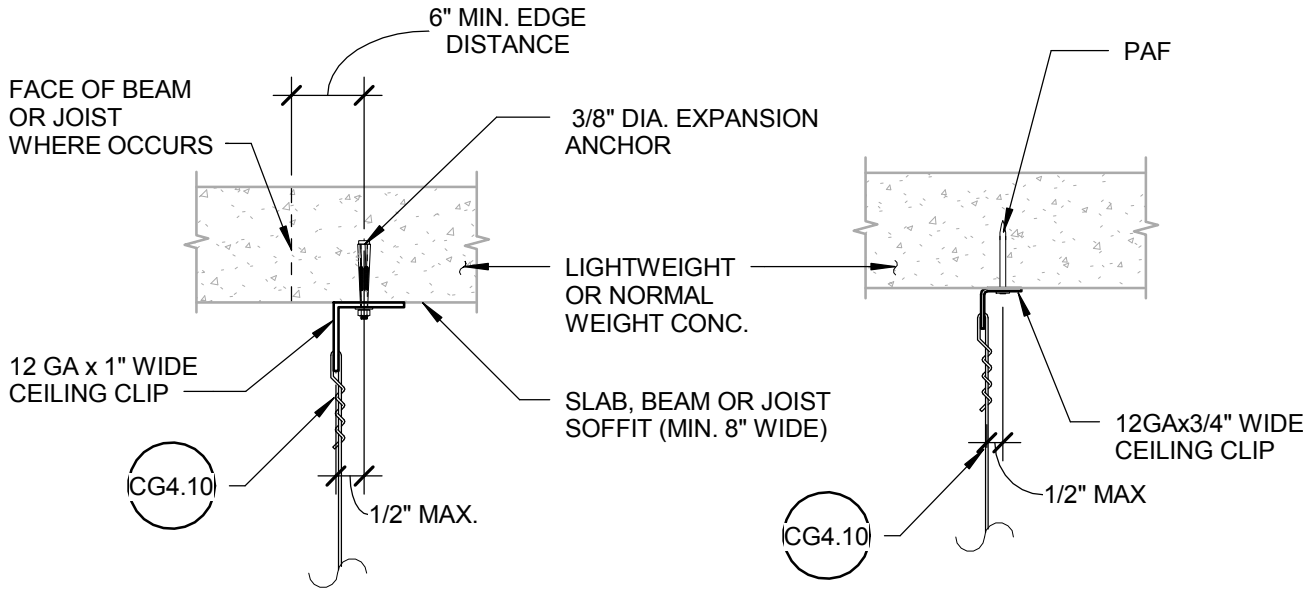

OPTION 1 **OPTION 2**

REVIEWED FOR CODE COMPLIANCE
oshpd
OPD-0003-13
BY: M.R.Karim
DATE: 12/10/2013
CALIFORNIA BUILDING CODE, 2013

NOTES:

1. LOAD TEST IN ACCORDANCE WITH GENERAL NOTE 14(g), PAGE CG0.02 SHALL BE REQUIRED
2. PRIOR TO INSTALLATION, REINFORCING/PRESTRESSING BAR LOCATIONS SHALL BE DETERMINED BY NON-DESTRUCTIVE TESTING
3. REFER TO CG4.10 FOR ADDITIONAL DETAILS

Section Title : OSHPD STANDARD GYPSUM BOARD CEILING DETAILS		OPD No:
Sheet Title : HANGER WIRE - CONCRETE SLAB, BEAM, OR JOIST		CG4.22

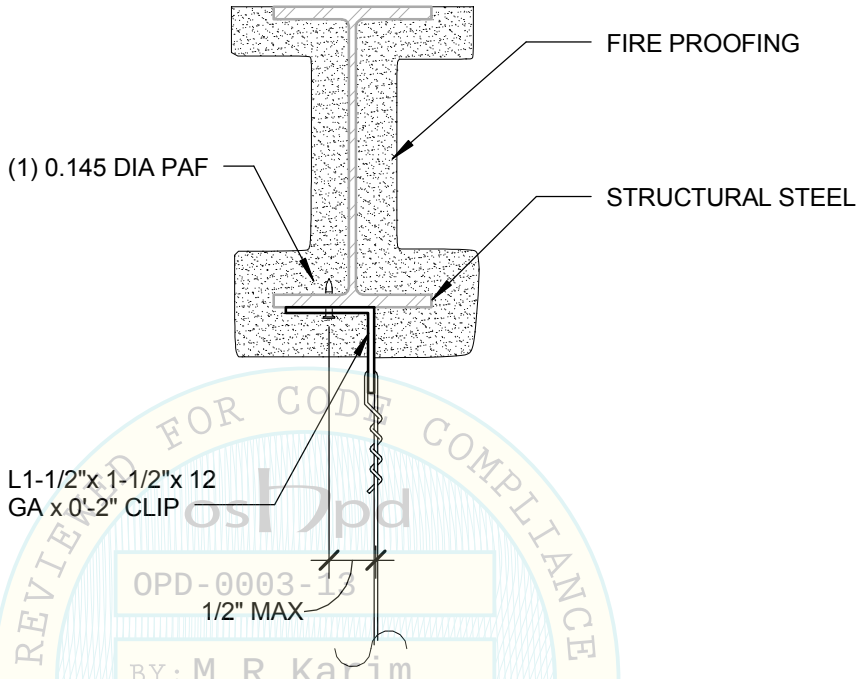

REVIEWED FOR CODE COMPLIANCE
OPD-0003-13
BY: M.R.Karim
DATE: 12/10/2013
CALIFORNIA BUILDING CODE, 2013

HANGER WIRE

NOTES :

1. BEAM FLANGE THICKNESS SHALL NOT BE LESS THAN 3/16" OR MORE THAN 3/8"
2. FRAMING MEMBERS SHALL BE DESIGNED TO CARRY THE CEILING LOADS, RDP TO VERIFY
3. RDP IN RESPONSIBLE CHARGE, I.O.R. AND CONTRACTOR SHALL VERIFY THAT NO PAF IS INSTALLED IN THE PROTECTED ZONE OF ANY STEEL MEMBER, SEE ANSI/AISC 341-10.

Section Title : OSHPD STANDARD GYPSUM BOARD CEILING DETAILS		OPD No:
Sheet Title : HANGER WIRE - STRUCTURAL STEEL		CG4.23

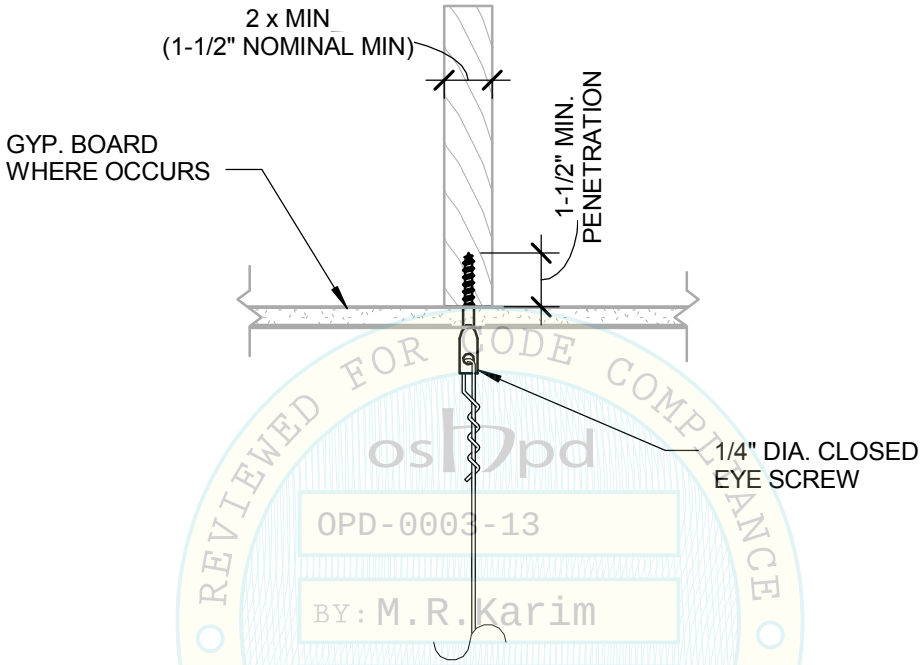

REVIEWED FOR CODE COMPLIANCE
oshpd
OPD-0003-13
BY: M.R.Karim
DATE: 12/10/2013
CALIFORNIA BUILDING CODE, 2013

HANGER WIRE

NOTES:
1. FRAMING MEMBERS SHALL BE DESIGNED TO CARRY THE CEILING LOADS, RDP TO VERIFY

2. RDP SHALL VERIFY THAT SCREWS AT THE BOTTOM FLANGE OF TRUSS IS ACCEPTABLE

Section Title : OSHPD STANDARD GYPSUM BOARD CEILING DETAILS	OPD No:
Sheet Title : HANGER WIRE - SAWN TIMBER	CG4.24

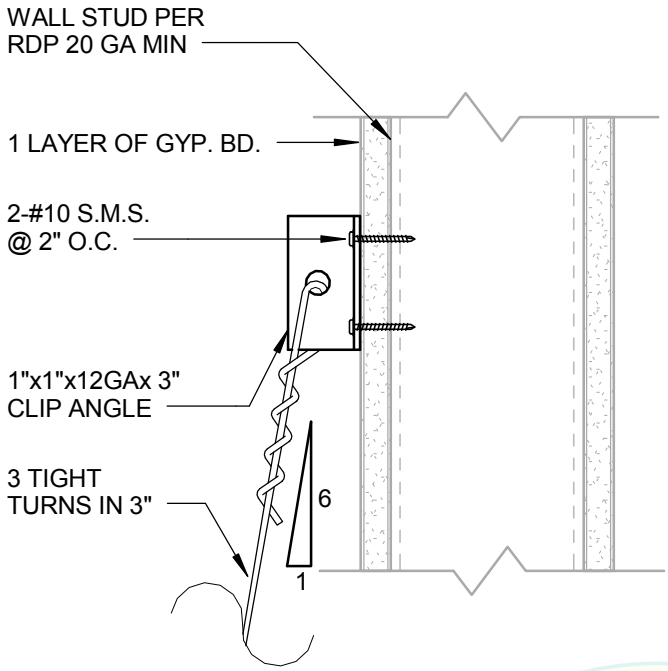

OPTION 1

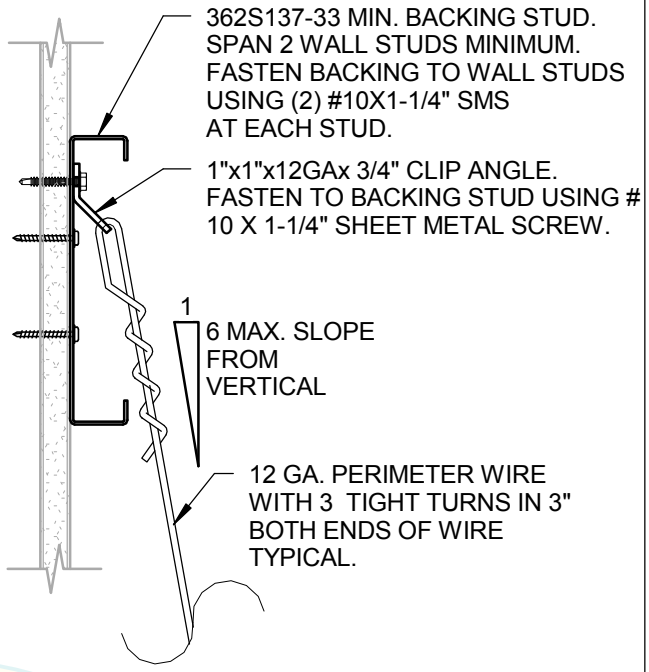

OPTION 2

REVIEWED FOR CODE COMPLIANCE
OPD-0003-13
BY: M.R.Karim
DATE: 12/10/2013
CALIFORNIA BUILDING CODE 2013

NOTES:

1. THIS IS APPLIED FOR PERIMETER WIRE ATTACHEMENT OR WHERE OBSTRUCTION PREVENTS ATTACHMENT TO STRUCTURE ABOVE
2. RDP SHALL DESIGN FRAMING WALL TO CARRY THE CEILING LOAD. SEE TABLE BELOW FOR LOADS. LOADS ASSUME A TRIBUTARY AREA OF 16 SQ FT AND ARE UNFACTORED.
3. WALLS SHALL BE DESIGNED FOR HANGER FORCES BELOW. AT FREE JOINT, HANGER WIRE SHALL HAVE A MINIMUM STRETCH LENGTH OF 12"

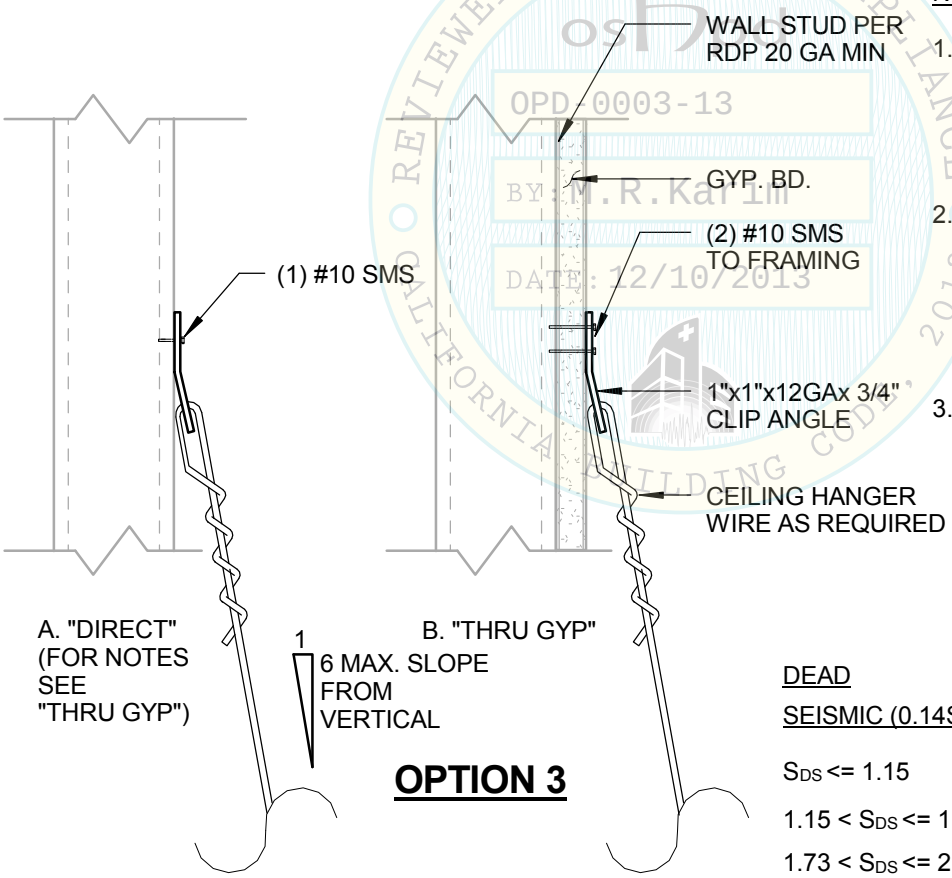

OPTION 3

HANGER FORCES

	VERTICAL	HORIZONTAL
DEAD	64 LBS	11 LBS
SEISMIC ($0.14S_{DS}$ Wp)		
S_{DS} <= 1.15	11 LBS	2 LBS
1.15 < S_{DS} <= 1.73	16 LBS	3 LBS
1.73 < S_{DS} <= 2.50	23 LBS	4 LBS

Section Title : OSHPD STANDARD GYPSUM BOARD CEILING DETAILS

OPD No:

Sheet Title : HANGER WIRE - METAL STUD WALL

CG4.25

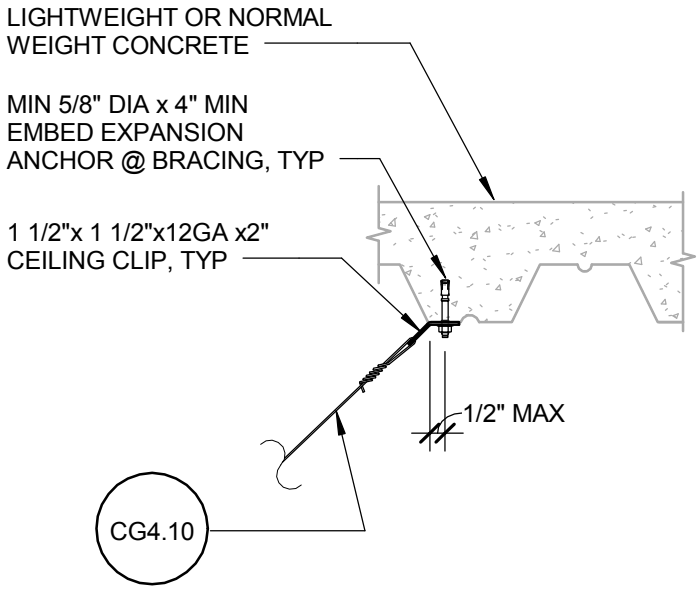

OPTION 1

REVIEWED FOR CODE COMPLIANCE
osPpd
OPD-0003-13
BY: M.R.Karim
DATE: 12/10/2013
CALIFORNIA BUILDING CODE, 2013

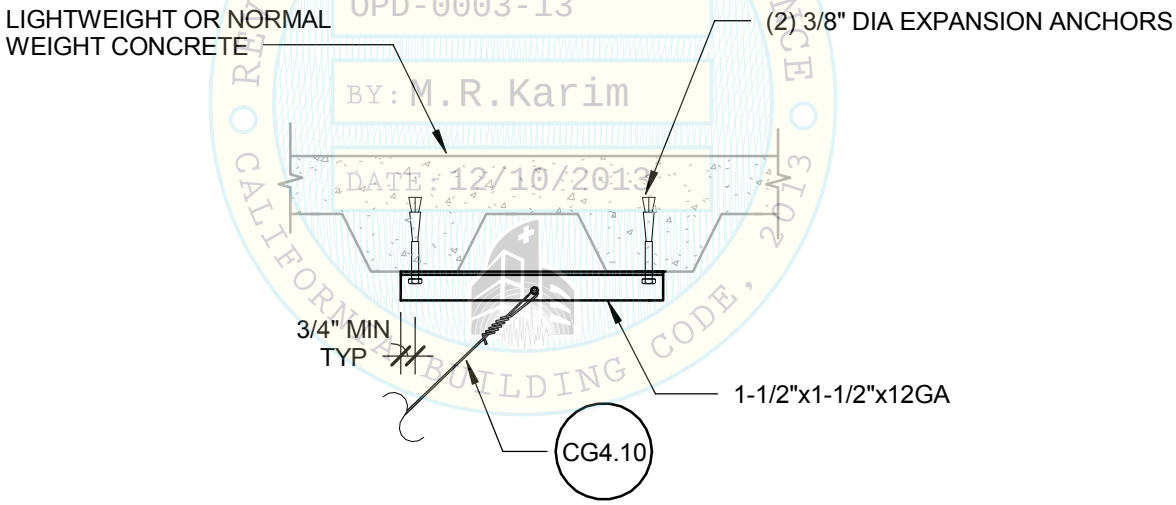

OPTION 2

NOTES:

1. LOAD TEST IN ACCORDANCE WITH GENERAL NOTE 14(g), PAGE CG0.02 SHALL BE REQUIRED

2. REFER TO CG4.10 FOR ADDITIONAL DETAILS

Section Title : OSHPD STANDARD GYPSUM BOARD CEILING DETAILS		OPD No:
Sheet Title : BRACING WIRE - CONCRETE OVER METAL DECK		CG4.31

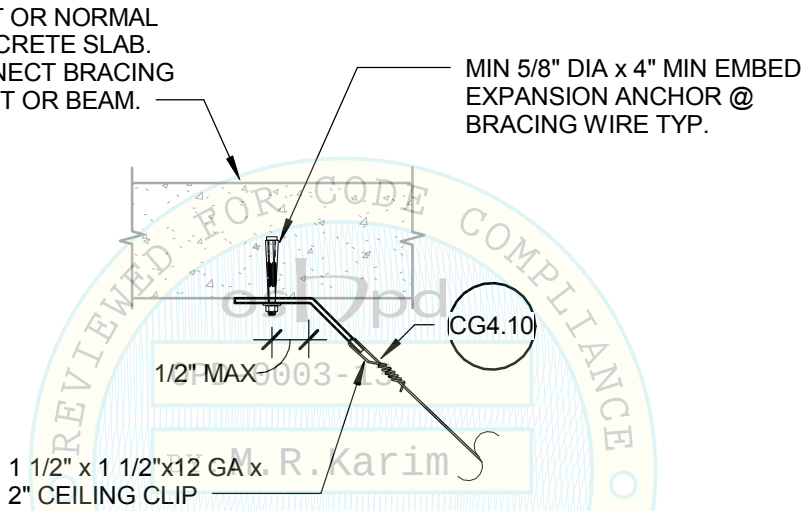

REVIEWED FOR CODE COMPLIANCE
opd
OPD-0003-13
M. R. Karim
DATE: 12/10/2013
CALIFORNIA BUILDING CODE, 2013

NOTES:

1. LOAD TEST IN ACCORDANCE WITH GENERAL NOTE 14(g), PAGE CG0.02 SHALL BE REQUIRED

2. REFER TO CG4.10 FOR ADDITIONAL DETAILS

Section Title : OSHPD STANDARD GYPSUM BOARD CEILING DETAILS		OPD No:
Sheet Title : BRACING WIRE - CONCRETE SLAB, BEAM, OR JOIST		CG4.32

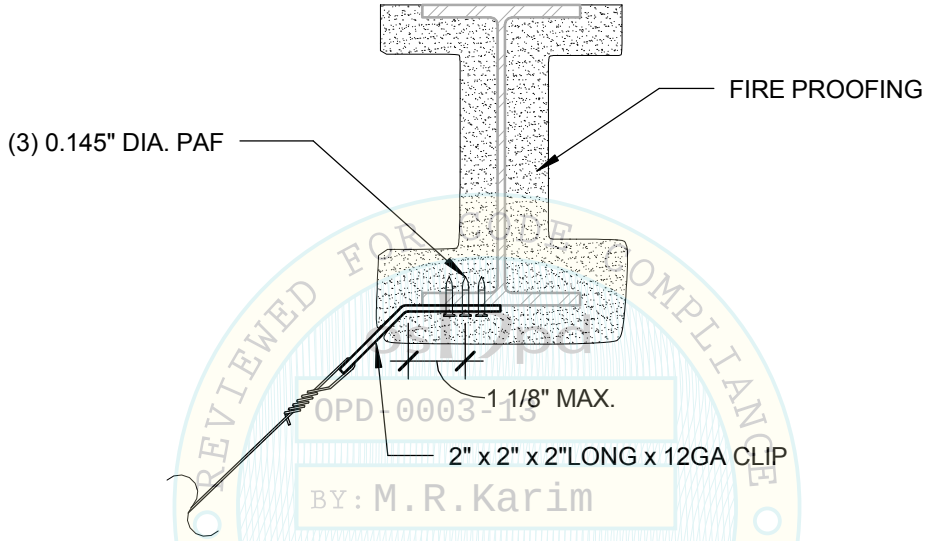

REVIEWED FOR CODE COMPLIANCE
OPD
OPD-0003-13
BY: M.R.Karim
DATE: 12/10/2013
CALIFORNIA BUILDING CODE, 2013

BRACING WIRE

NOTES :

1. BEAM FLANGE THICKNESS SHALL NOT BE LESS THAN 3/16" OR MORE THAN 3/8"
2. FRAMING MEMBERS SHALL BE DESIGNED TO CARRY THE CEILING LOADS, RDP TO VERIFY
3. RDP IN RESPONSIBLE CHARGE, I.O.R. AND CONTRACTOR SHALL VERIFY THAT NO PAF IS INSTALLED IN THE PROTECTED ZONE OF ANY STEEL MEMBER, SEE ANSI/AISC 341-10.

Section Title : OSHPD STANDARD GYPSUM BOARD CEILING DETAILS		OPD No:
Sheet Title : BRACING WIRE - STRUCTURAL STEEL		CG4.33

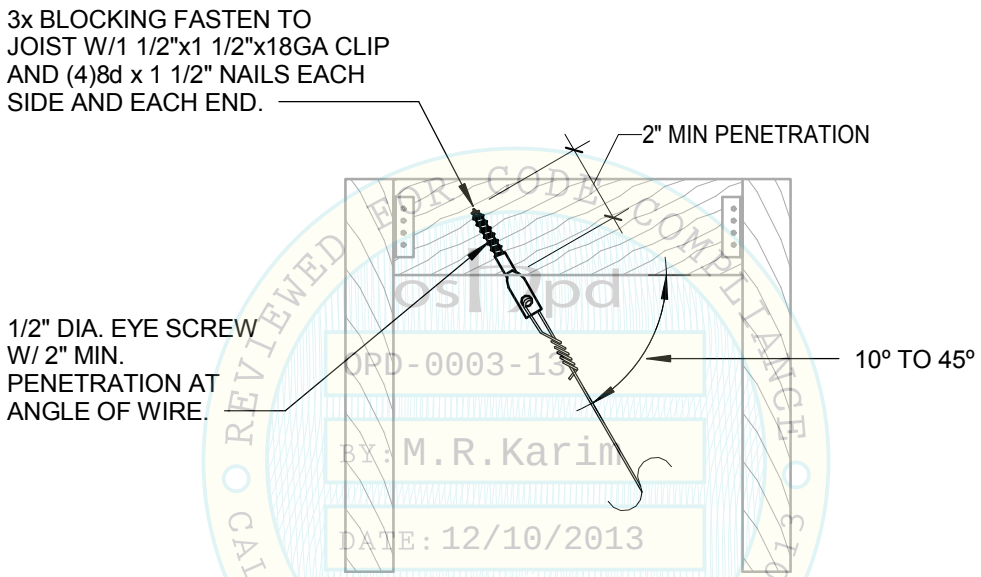

REVIEWED FOR CODE COMPLIANCE
oshpd
OPD-0003-13
BY: M.R.Karim
DATE: 12/10/2013
CALIFORNIA BUILDING CODE, 2013

BRACING WIRE

NOTES:
1. FRAMING MEMBERS SHALL BE DESIGNED TO CARRY THE CEILING LOADS, RDP TO VERIFY

2. RDP SHALL VERIFY THAT SCREWS AT THE BOTTOM FLANGE OF TRUSS IS ACCEPTABLE

Section Title : OSHPD STANDARD GYPSUM BOARD CEILING DETAILS		OPD No:
Sheet Title : BRACING WIRE - SAWN TIMBER		CG4.34

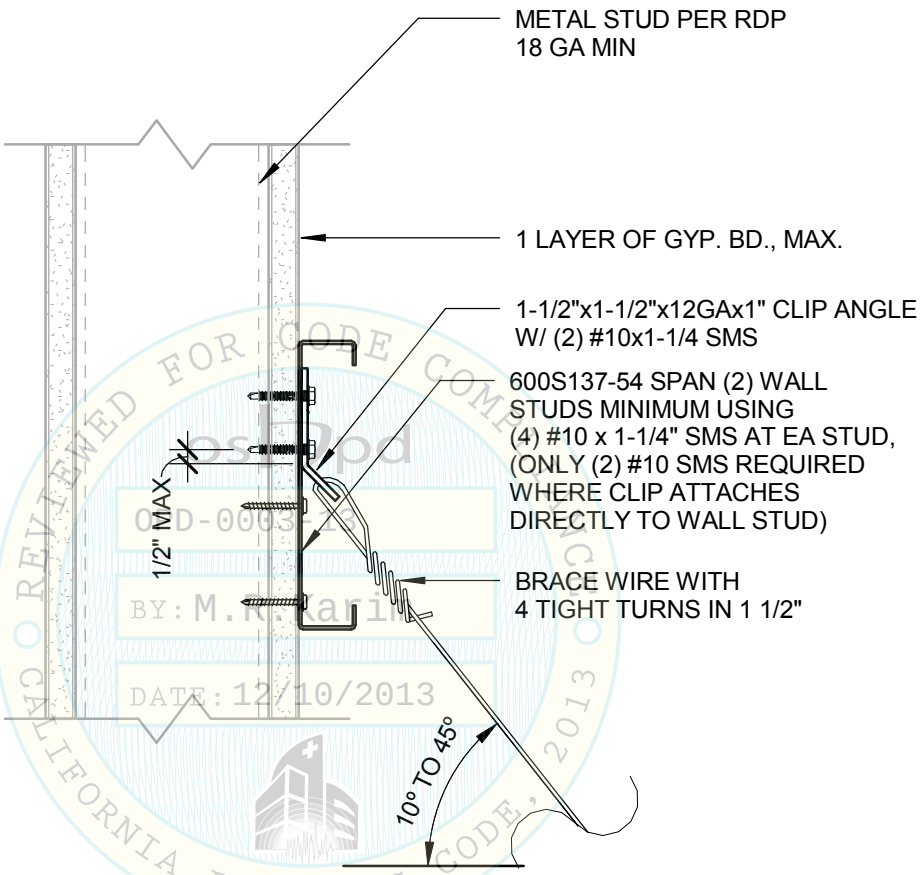

REVIEWED FOR CODE COMPLIANCE
OSHPD
OPD-0003-13
BY: M.R.Karim
DATE: 12/10/2013
CALIFORNIA BUILDING CODE, 2013

NOTES:

1. RDP SHALL DESIGN FRAMING WALL TO CARRY THE CEILING LOAD PER NOTE#2.

2. SEISMIC BRACE WIRE FORCE = 473 LBS (ASD LEVEL). BRACING WIRE SHALL HAVE A MINIMUM STRETCH LENGTH OF 12", WHEN USED AT FREE JOINT.

3. CEILING BRACING WIRE SHALL NOT BE ATTACHED TO WALL ON "FREE JOINT" SIDE OF CEILING.

Section Title : OSHPD STANDARD GYPSUM BOARD CEILING DETAILS		OPD No:
Sheet Title : BRACING WIRE - METAL STUD WALL		CG4.35

STRUCTURAL CONDITION OF FLOOR / ROOF ABOVE STRUT	APPLICABLE DETAIL
CONCRETE OVER METAL DECK	CG5.20
CONCRETE SLAB, BEAM, OR JOIST	CG5.30
STRUCTURAL STEEL	CG5.40
SAWN TIMBER WITH GYPSUM BOARD	CG5.50
SAWN TIMBER WITHOUT GYPSUM BOARD	CG5.60

REVIEWED FOR CODE COMPLIANCE
oshpd
OPD-0003-13
BY: M.R.Karim
DATE: 12/10/2013
CALIFORNIA BUILDING CODE, 2013

Section Title : OSHPD STANDARD GYPSUM BOARD CEILING DETAILS

OPD No:

Sheet Title : STRUT CONNECTION MATRIX

CG5.10

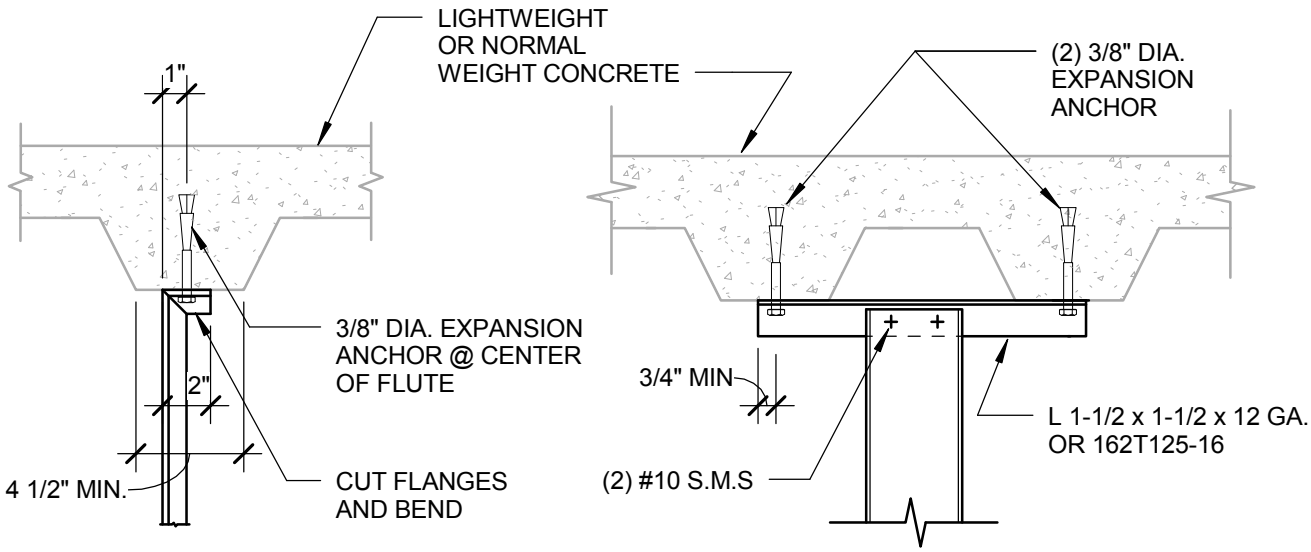

OPTION 1 **OPTION 2**

CHANNEL STRUT

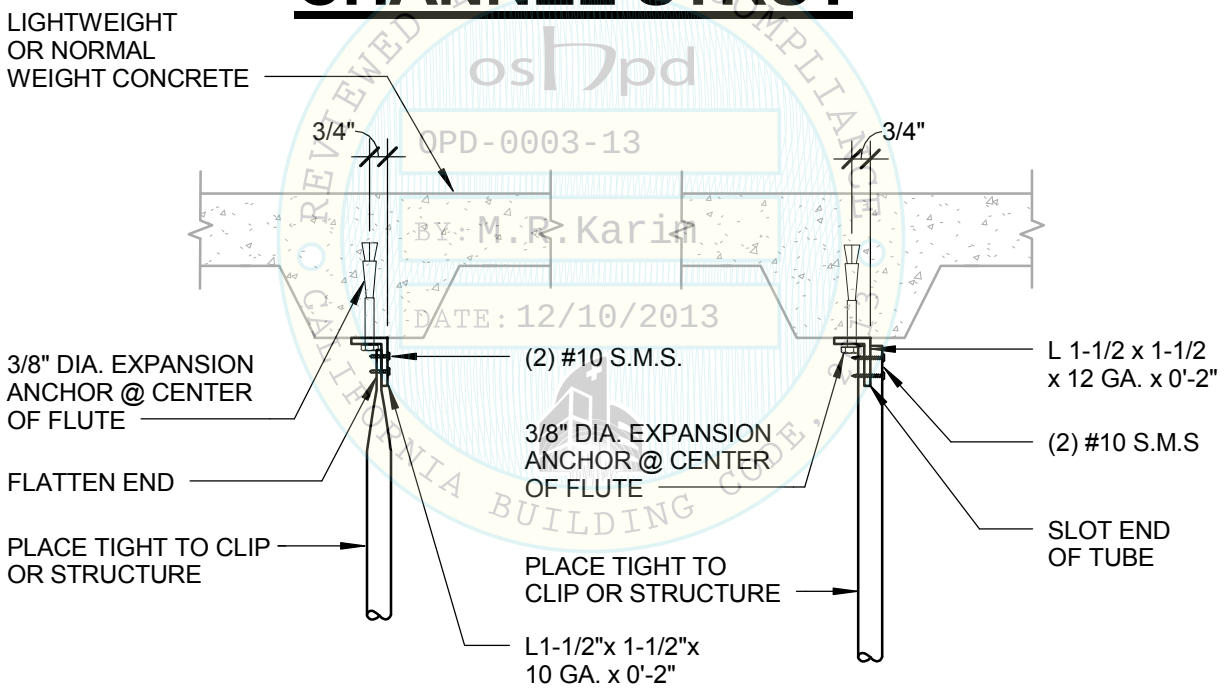

REVIEWED FOR CODE COMPLIANCE
OSHPD
OPD-0003-13
BY: M.R.Karim
DATE: 12/10/2013
CALIFORNIA BUILDING CODE

OPTION 1 **OPTION 2**

TUBE STRUT

Section Title : OSHPD STANDARD GYPSUM BOARD CEILING DETAILS		OPD No:
Sheet Title : STRUT CONNECTION TO CONCRETE OVER METAL DECK		CG5.20

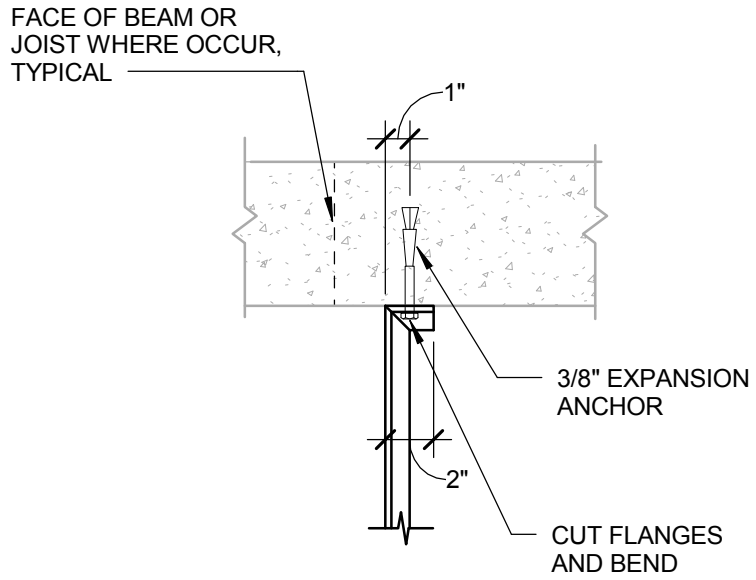

CHANNEL STRUT

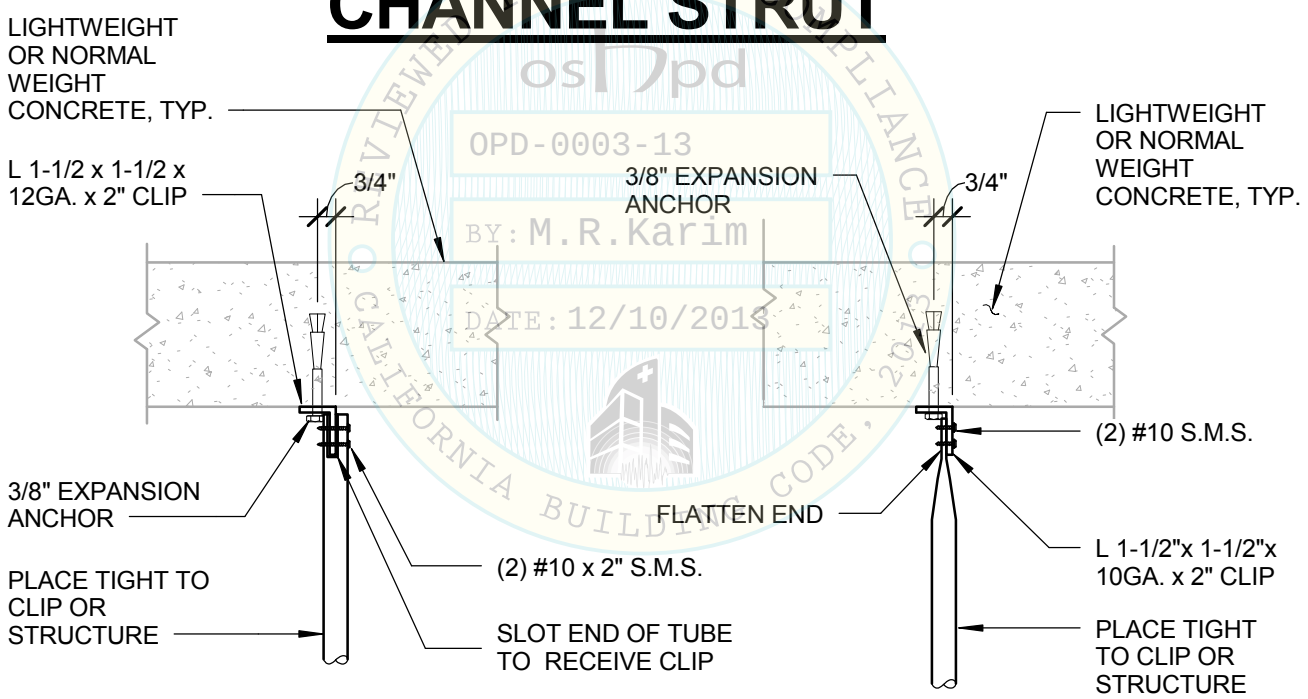

REVIEWED FOR CODE COMPLIANCE TO CALIFORNIA BUILDING CODE, 2013
OSHPD
OPD-0003-13
BY: M.R.Karim
DATE: 12/10/2013

OPTION 1 **OPTION 2**

TUBE STRUT

Section Title : OSHPD STANDARD GYPSUM BOARD CEILING DETAILS		OPD No:
Sheet Title : STRUT CONNECTION TO CONCRETE SLAB, BEAM OR JOIST		CG5.30

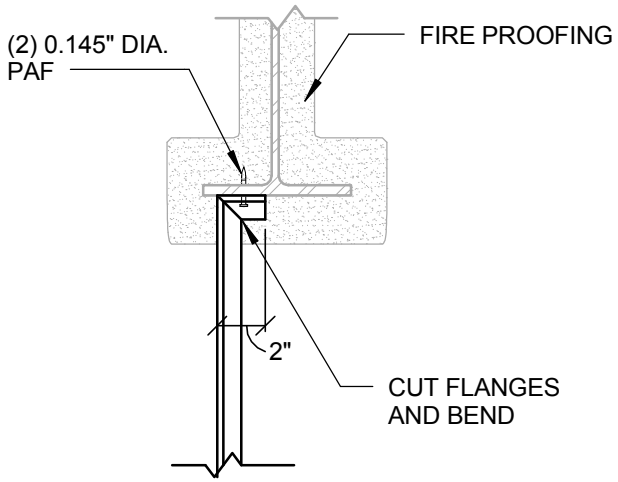

CHANNEL STRUT

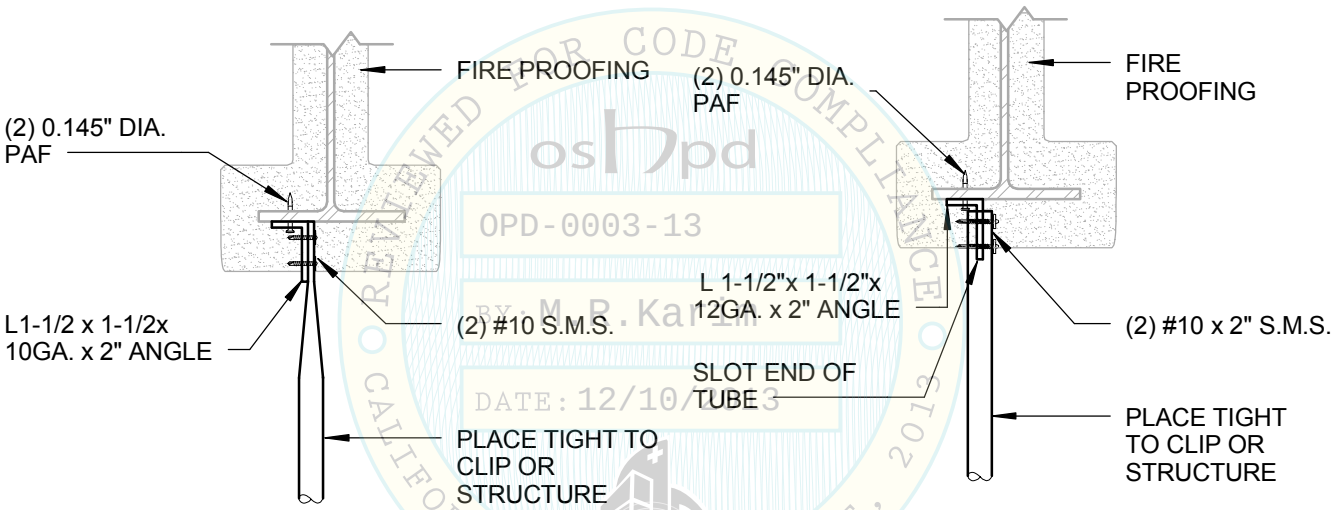

OPTION 1 **OPTION 2**

TUBE STRUT

REVIEWED FOR CODE COMPLIANCE
oshpd
OPD-0003-13
BY: M.R. Karim
DATE: 12/10/13
CALIFORNIA BUILDING CODE, 2013

NOTES:

1. STRUCTURAL STEEL MEMBER SHALL HAVE A MINIMUM FLANGE THICKNESS OF 3/16" AND MAXIMUM OF 3/8".
2. FRAMING MEMBERS MUST BE DESIGNED TO CARRY THE CEILING LOADS, RDP TO VERIFY.
3. RDP IN RESPONSIBLE CHARGE, I.O.R. AND CONTRACTOR SHALL VERIFY THAT NO PAF IS INSTALLED IN THE PROTECTED ZONE OF ANY STEEL MEMBER, SEE ANSI/AISC 341-10.
4. SEE PAGES CG5.20 & CG5.30 FOR ADDITIONAL INFORMATION.

Section Title : OSHPD STANDARD GYPSUM BOARD CEILING DETAILS		OPD No:
Sheet Title : STRUT CONNECTION TO STRUCTURAL STEEL		CG5.40

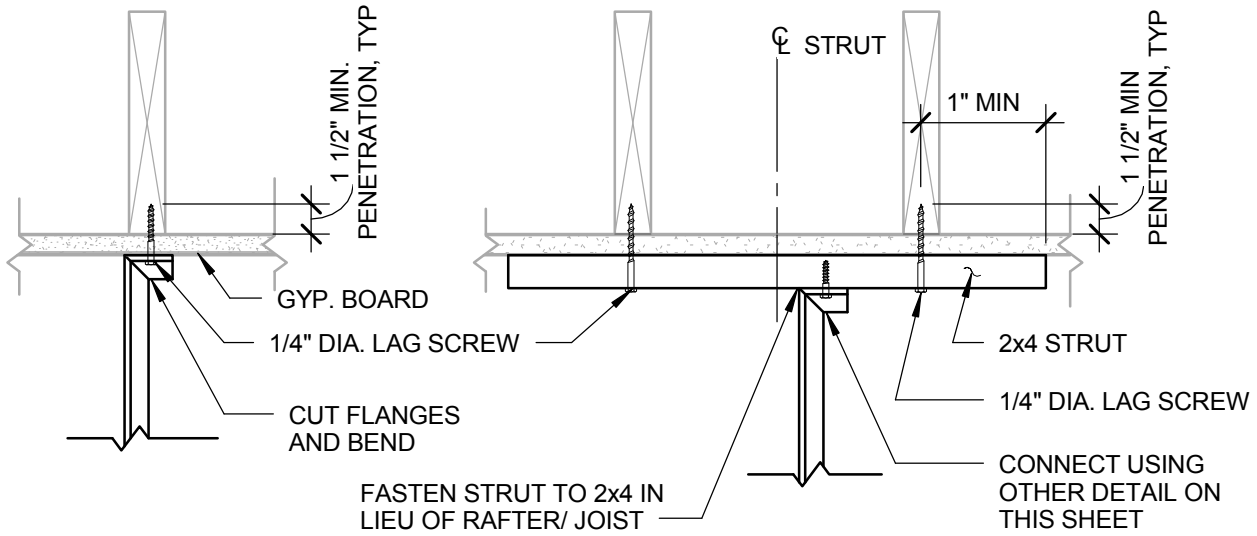

OPTION 1 **OPTION 2**

CHANNEL STRUT

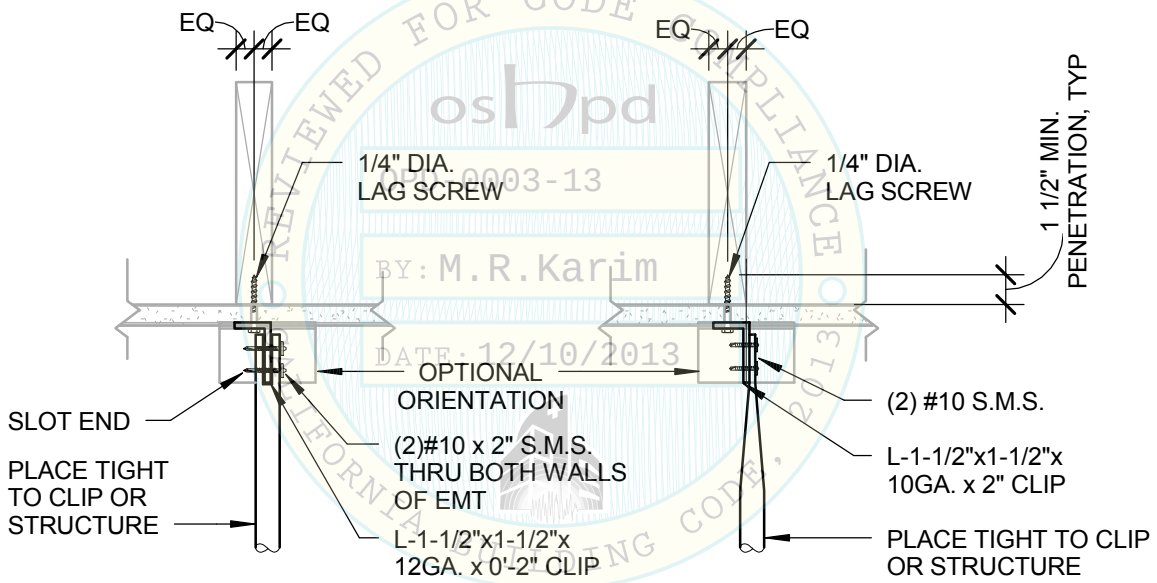

REVIEWED FOR CODE COMPLIANCE
OSHPD
OPD-0003-13
BY: M.R.Karim
DATE: 12/10/2013
CALIFORNIA BUILDING CODE, 2013

OPTION 1 **OPTION 2**

TUBE STRUT

NOTES:

1. FRAMING MEMBERS MUST BE DESIGNED TO CARRY THE CEILING LOADS, RDP TO VERIFY.
2. RDP SHALL VERIFY THAT SCREWS AT THE BOTTOM FLANGE OF TRUSS IS ACCEPTABLE
3. SEE PAGES CG5.20 & CG5.30 FOR ADDITIONAL INFORMATION

Section Title : OSHPD STANDARD GYPSUM BOARD CEILING DETAILS		OPD No:
Sheet Title : STRUT CONNECTION TO SAWN TIMBER WITH GYPSUM BOARD		CG5.50

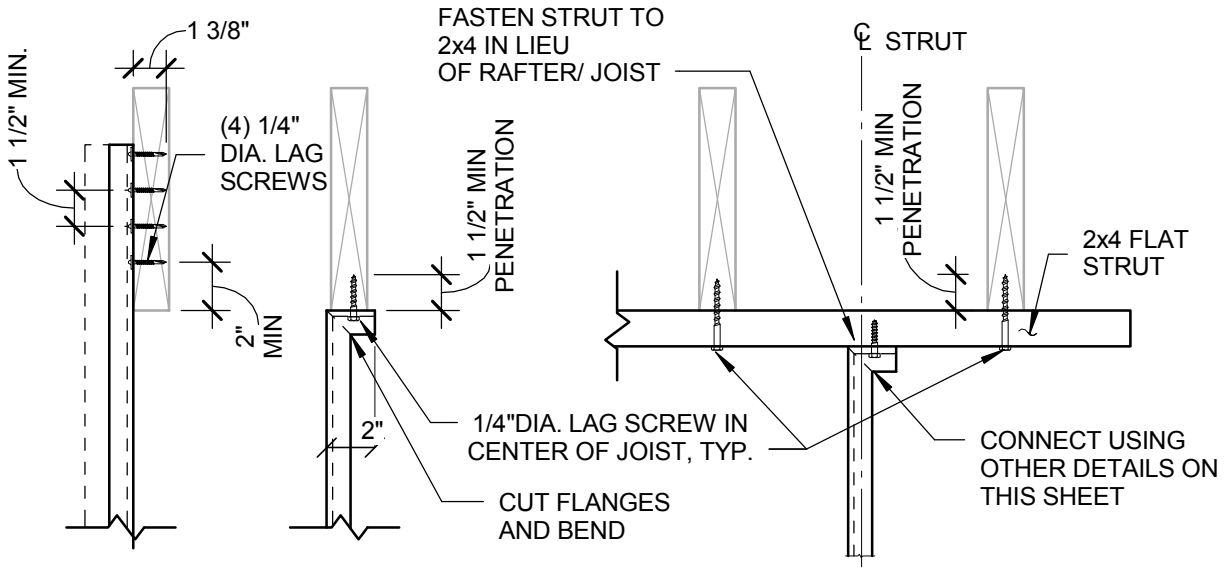

OPTION 1 **OPTION 2** **OPTION 3**

CHANNEL STRUT

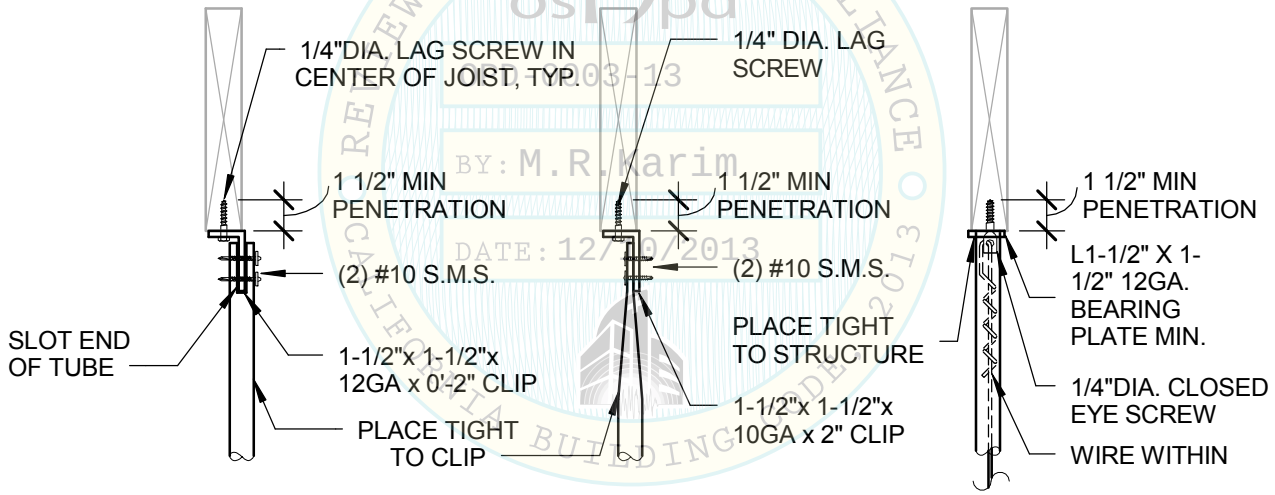

OPTION 1 **OPTION 2** **OPTION 3**

TUBE STRUT

REVIEWED FOR CODE COMPLIANCE
OSHPD
OPD-0003-13
BY: M.R.Karim
DATE: 12/10/2013
CALIFORNIA BUILDING CODE 2013

NOTES:

1. FRAMING MEMBERS MUST BE DESIGNED TO CARRY THE CEILING LOADS, RDP TO VERIFY.
2. RDP SHALL VERIFY THAT SCREWS AT THE BOTTOM FLANGE OF TRUSS IS ACCEPTABLE.
3. SEE PAGES CG5.20, CG5.30 & CG5.50 FOR ADDITIONAL INFORMATION.

Section Title : OSHPD STANDARD GYPSUM BOARD CEILING DETAILS		OPD No:
Sheet Title : CONNECTION TO SAWN TIMBER WITHOUT GYPSUM BOARD		CG5.60

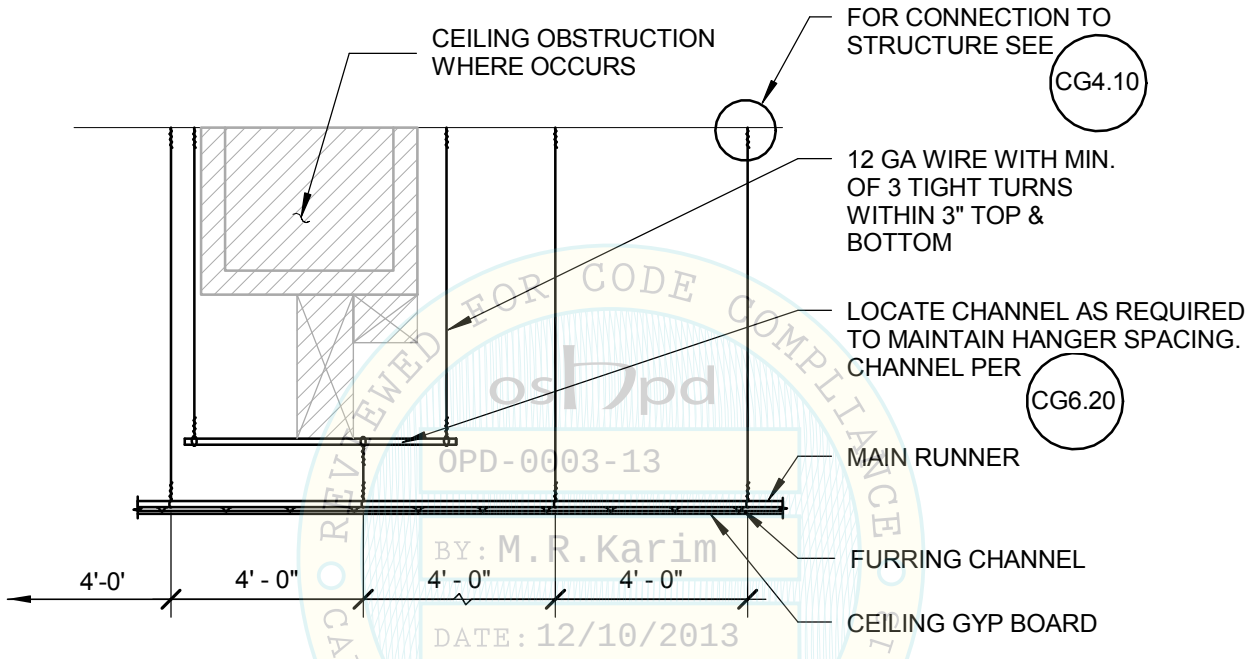

TRAPEZE SUPPORT

REVIEWED FOR CODE COMPLIANCE
oshpd
OPD-0003-13
BY: M.R.Karim
DATE: 12/10/2013
CALIFORNIA BUILDING CODE, 2010

Section Title : OSHPD STANDARD GYPSUM BOARD CEILING DETAILS		OPD No:
Sheet Title : OBSTRUCTION - TRAPEZE CONDITION		CG6.10

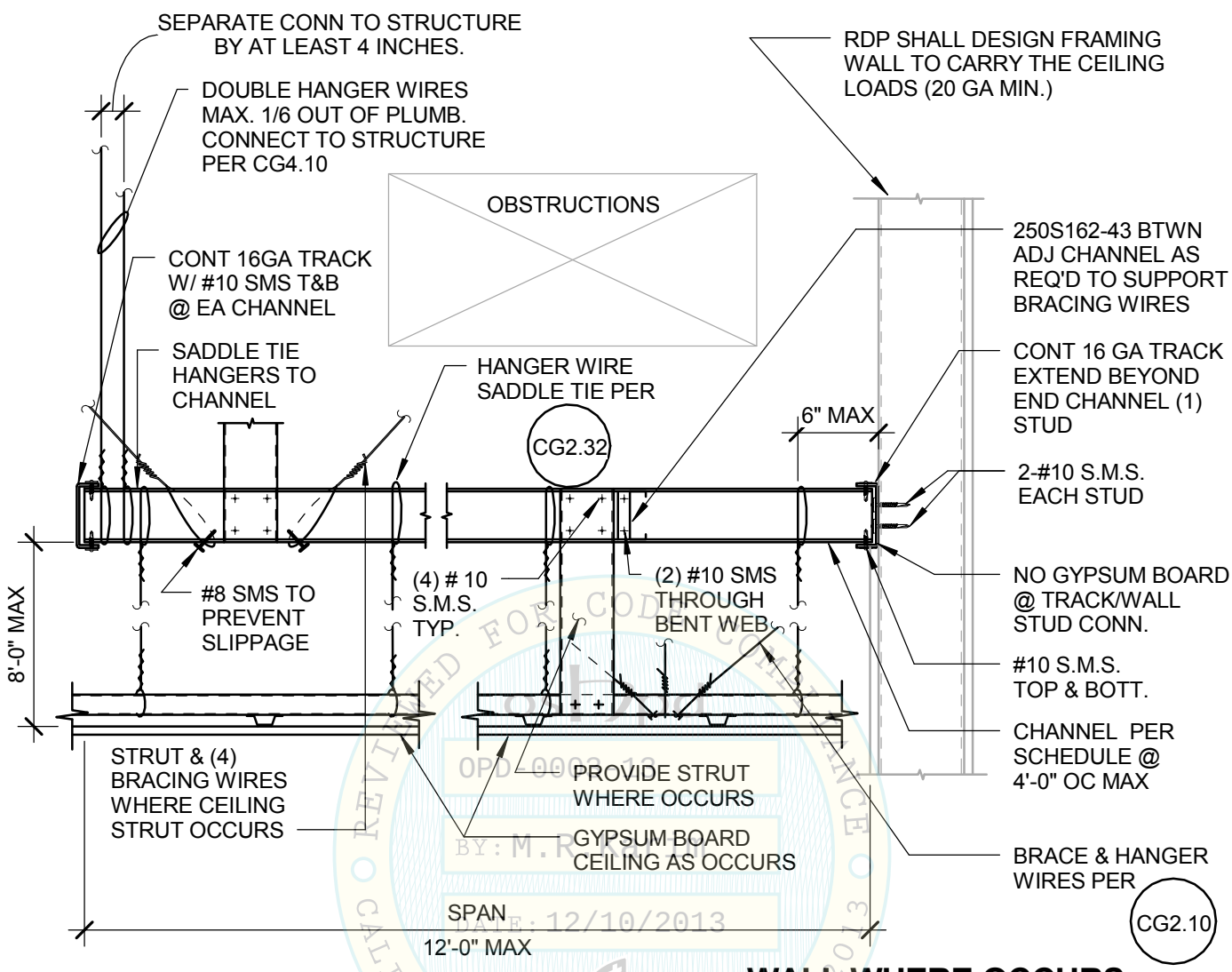

WALL WHERE OCCURS

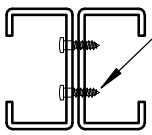

SPAN	SECTION
4'-0"	250S162-43
8'-0"	400S162-54
12'-0"	(2) 400S162-54

DBL. SECTION

REVIEWED FOR CODE COMPLIANCE
OPD-0003-13
BY: M.R.
DATE: 12/10/2013
CALIFORNIA BUILDING CODE, 2013

Section Title : OSHPD STANDARD GYPSUM BOARD CEILING DETAILS	OPD No:
Sheet Title : OBSTRUCTION-BRIDGE AT LARGE OFFSET CONDITION	CG6.20

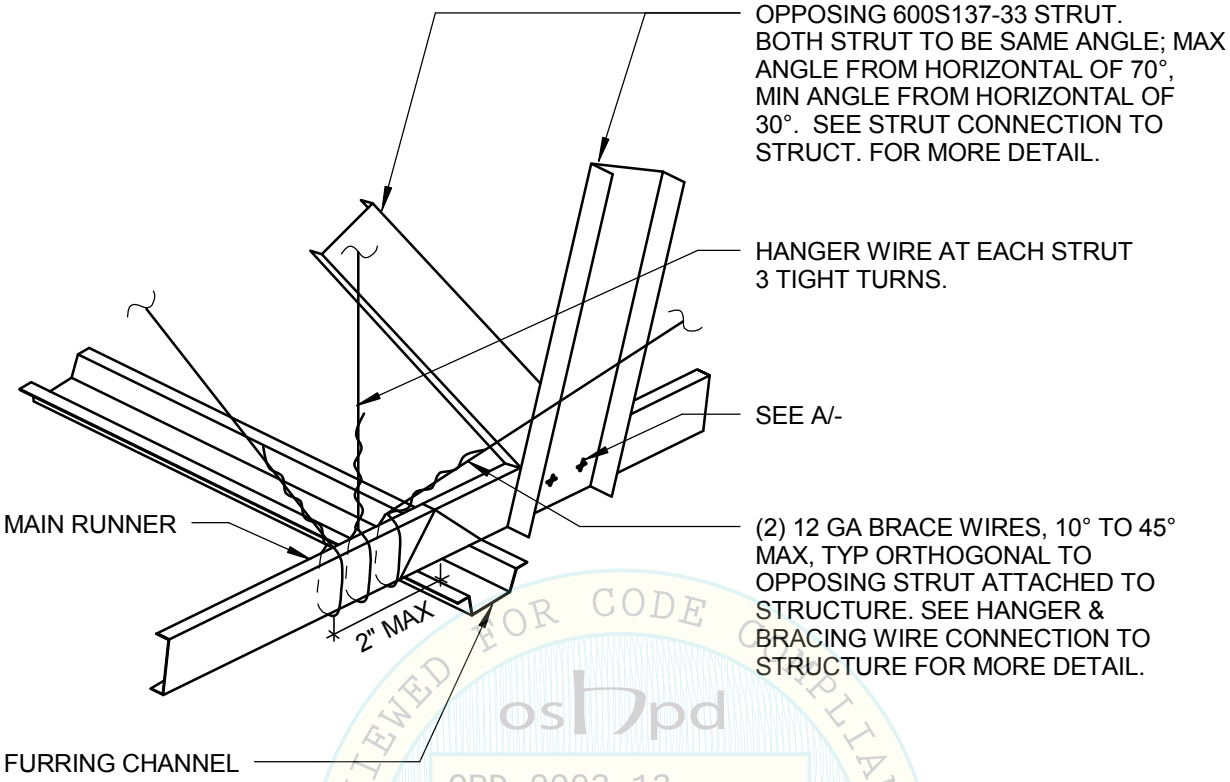

ISOMETRIC

REVIEWED FOR CODE COMPLIANCE
oshpd
OPD-0003-13
BY: M.R.Karim
DATE: 12/10/2013
CALIFORNIA BUILDING CODE, 2013

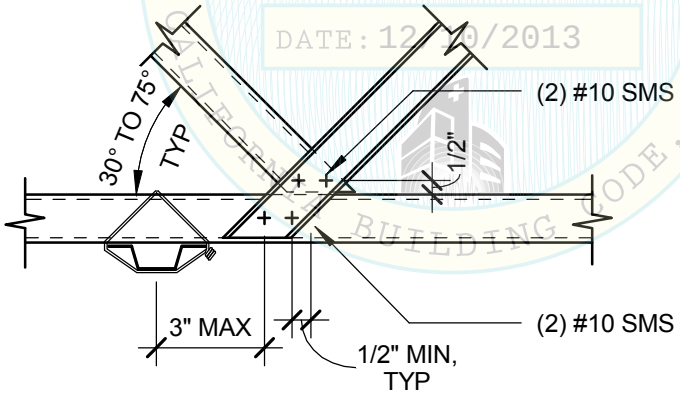

A **DETAIL**

OPPOSING STRUTS FOR GYPSUM BOARD CEILING

Section Title : OSHPD STANDARD GYPSUM BOARD CEILING DETAILS		OPD No:
Sheet Title : OBSTRUCTION-COUNTER SLOPING STRUTS		CG6.30

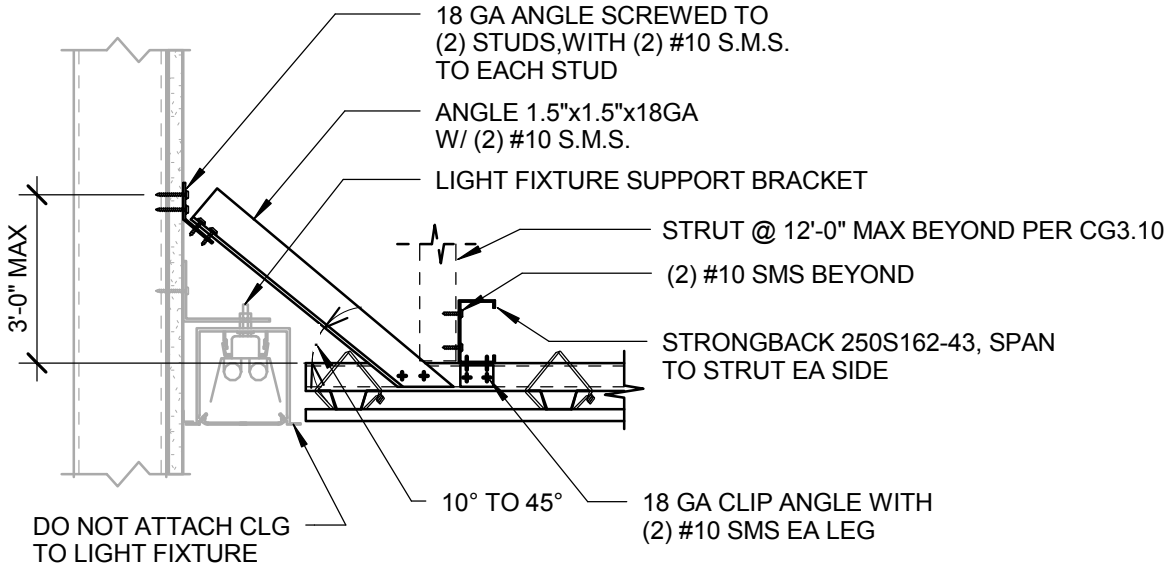

LOCATIONS WITHOUT CROSS JOISTS

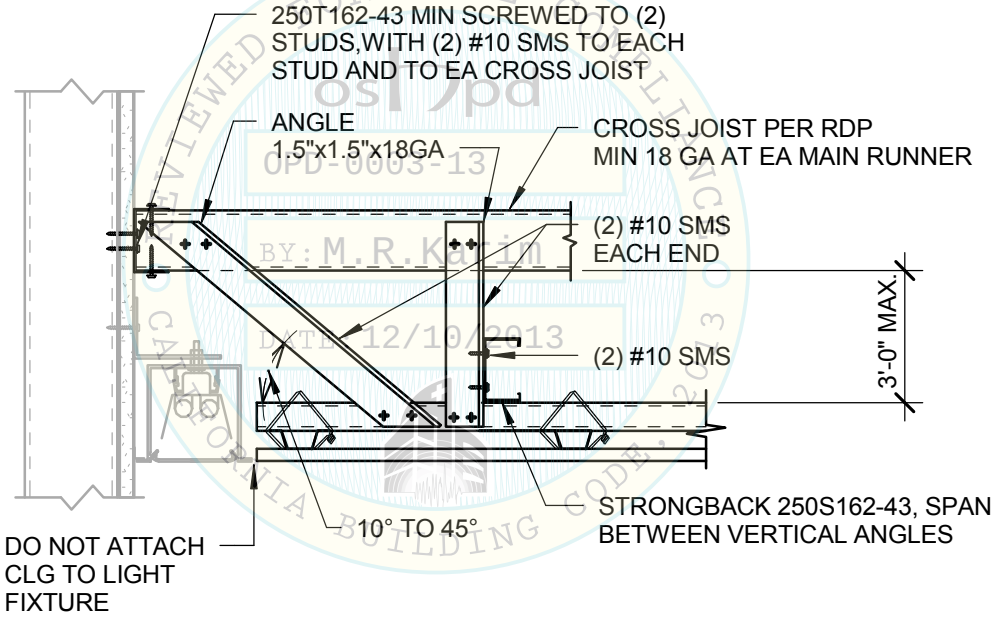

REVIEWED FOR CODE COMPLIANCE
OSHPD
OPD-0003-13
BY: M.R.Karim
DATE: 12/10/2013
CALIFORNIA BUILDING CODE, 2013

LOCATIONS WITH CROSS JOISTS

NOTES:

1. RDP SHALL VERIFY CROSS JOIST, STRONGBACK, STRUT, BRACE, AND SUPPORTING WALL.

2. DETAILS IN THIS PAGE ARE ONLY PERMITTED AT THE ATTACHED END OF THE CEILING AND ARE NOT PERMITTED AT THE FREE JOINT.

3. ALL BRACING AND HANGER WIRES PER CG3.10 REQUIRED.

Section Title : OSHPD STANDARD GYPSUM BOARD CEILING DETAILS		OPD No:
Sheet Title : OBSTRUCTION-RECESSED LIGHT AT PERIMETER		CG6.40

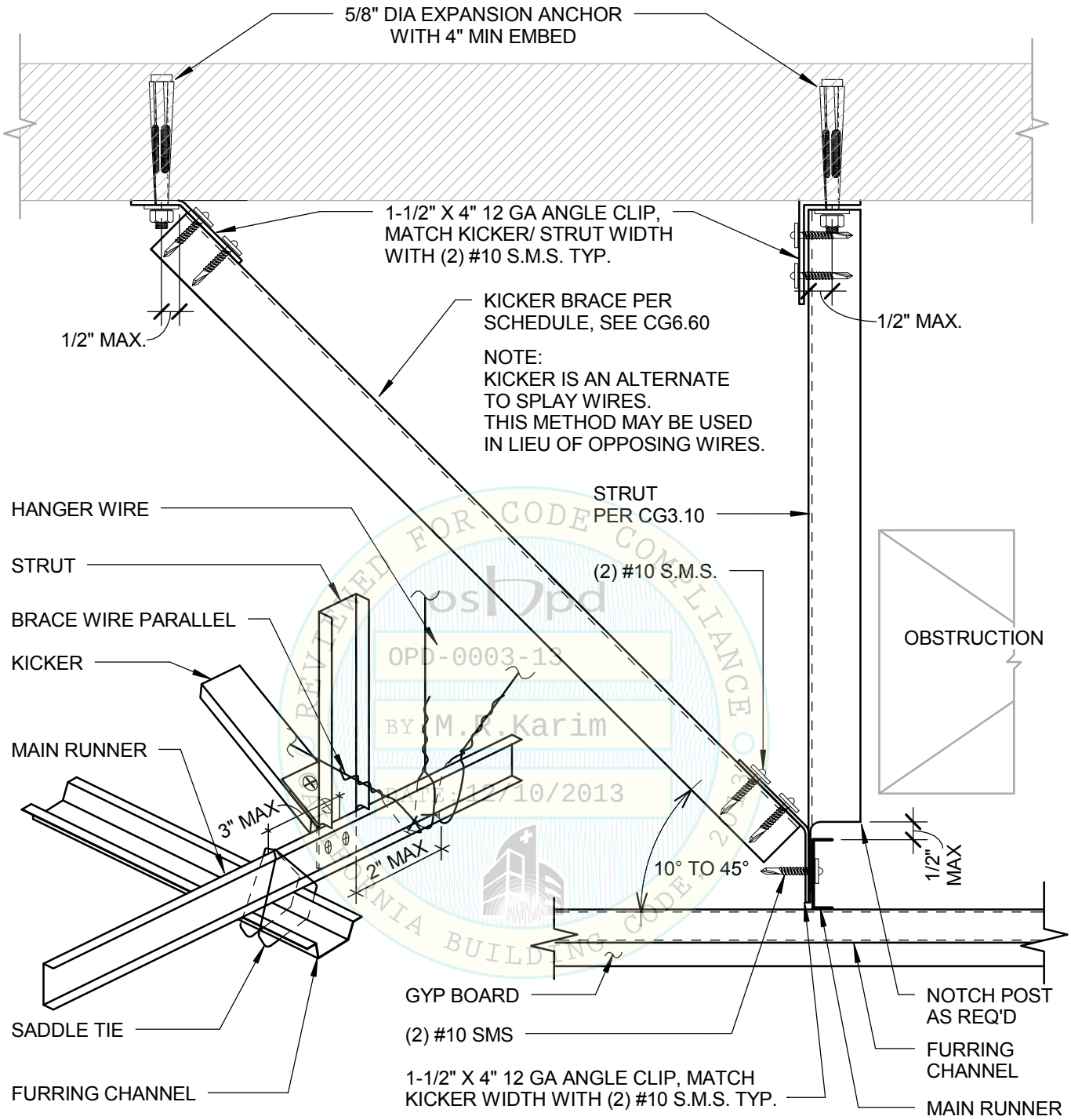

REVIEWED FOR CODE COMPLIANCE
OSHPD
OPD-0003-13
BY M.R.Karim
DATE: 12/10/2013
CALIFORNIA BUILDING CODE 2013

ISOMETRIC VIEW **SIDE VIEW**

SUSPENDED GYPBOARD CEILING - WIRE OBSTRUCTION DETAIL W/ STUD KICKER, LESS BRACING WIRES, TO DECK.

Section Title : OSHPD STANDARD GYPSUM BOARD CEILING DETAILS		OPD No:
Sheet Title : OBSTRUCTION-STUD KICKER TO OVERHEAD		CG6.50

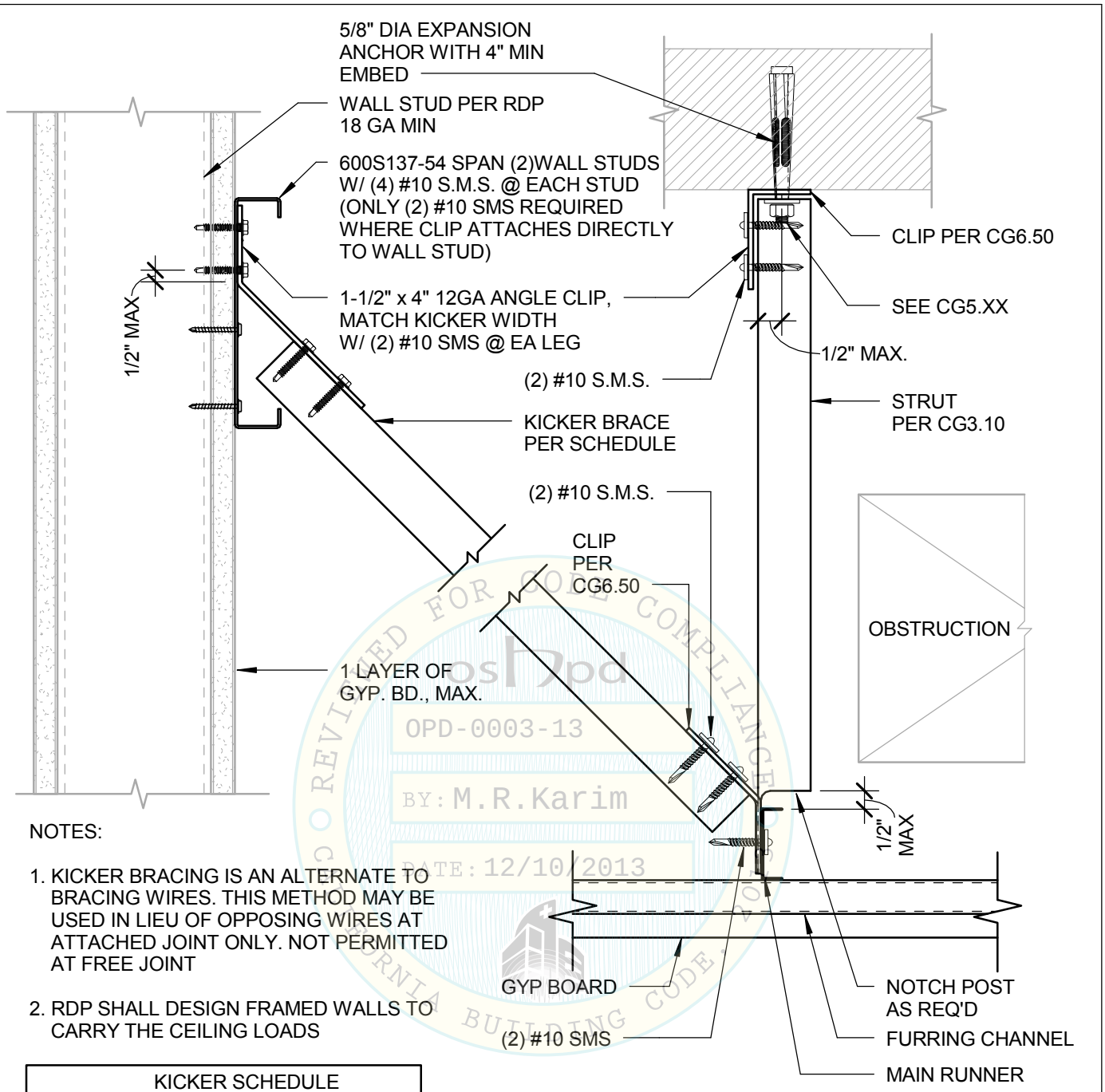

NOTES:

1. KICKER BRACING IS AN ALTERNATE TO BRACING WIRES. THIS METHOD MAY BE USED IN LIEU OF OPPOSING WIRES AT ATTACHED JOINT ONLY. NOT PERMITTED AT FREE JOINT
2. RDP SHALL DESIGN FRAMED WALLS TO CARRY THE CEILING LOADS

KICKER SCHEDULE			
	SPAN	MATERIAL	SSMA
≤	4'-0"	18 GA	250S137-43
≤	8'-0"	18 GA	400S162-43
≤	14'-0"	16 GA	400S162-54

3. REFER TO CG6.50 FOR BALANCE OF INFO.

REVIEWED FOR CODE COMPLIANCE
OSHPD
OPD-0003-13
BY: M.R.Karim
DATE: 12/10/2013
CALIFORNIA BUILDING CODE

SIDE VIEW

SUSPENDED GYPBOARD CEILING - WIRE OBSTRUCTION DETAIL W/ STUD KICKER, LESS BRACING WIRES, TO WALL

Section Title : OSHPD STANDARD GYPSUM BOARD CEILING DETAILS		OPD No:
Sheet Title : OBSTRUCTION-STUD KICKER TO WALL		CG6.60

SUSPENDED GYP BOARD CEILING
GENERAL NOTES

1. CONSTRUCTION, WORKMANSHIP AND MATERIAL SHALL CONFORM TO THE 2013 CALIFORNIA BUILDING STANDARDS CODE (CBSC 2013).

2. THE CONTRACTOR SHALL NOTIFY OSHPD AND THE REGISTERED DESIGN PROFESSIONAL (RDP) IN RESPONSIBLE CHARGE WHERE A CONFLICT OR DISCREPANCY OCCURS BETWEEN THE CONSTRUCTION DRAWINGS AND ANY OTHER PORTION OF THE CONSTRUCTION DOCUMENTS, FIELD CONDITIONS, OR WHERE ANY CONDITIONS ARISE NOT COVERED BY THESE DOCUMENTS WHEREIN WORK WILL NOT COMPLY WITH CODE REQUIREMENTS.

3. THE INTENT OF THE DRAWINGS AND SPECIFICATIONS IS TO CONSTRUCT THE HOSPITAL BUILDING IN ACCORDANCE WITH THE CALIFORNIA BUILDING STANDARD CODE, 2013 (CBSC 2013). SHOULD ANY CONDITION DEVELOP NOT COVERED BY THE APPROVED CONSTRUCTION DOCUMENTS WHEREIN THE WORK WILL NOT COMPLY WITH CBSC 2013, A CHANGE ORDER DETAILING AND SPECIFYING THE REQUIRED WORK SHALL BE SUBMITTED TO AND APPROVED BY OSHPD BEFORE PROCEEDING WITH THE WORK.

4. GALVANIZED METAL STUDS, TRACKS AND SHEET STEEL SHALL CONFORM TO ASTM A653-11 MATERIAL, OR OTHER EQUIVALENT ASTM LISTED MATERIALS IN SECTION A2.1 OF THE AISI SI00-07/S2-10; NORTH AMERICAN SPECIFICATION FOR THE DESIGN OF COLD-FORMED STEEL STRUCTURAL MEMBERS WITH SUPPLEMENT 2, DATED 2010, WITH A MINIMUM YIELD STRENGTH OF 33 KSI FOR 43 MIL (18 GAGE) AND LIGHTER AND MINIMUM YIELD STRENGTH OF 50 KSI FOR HEAVIER GAGES.

   METAL STUDS AND TRACKS SHALL BE OF SIZE, THICKNESS AND SECTION PROPERTIES SHOWN ON TABLES 1-1, 1-2 AND 1-3 OF THE AISI MANUAL, COLD-FORMED STEEL DESIGN, 2008 EDITION. THE RDP IN RESPONSIBLE CHARGE SHALL OBTAIN OSHPD APPROVAL FOR ANY SUBSTITUTIONS.

5. THESE OPD REFER TO FASTENER TYPE AND SIZE BUT DO NOT SPECIFY OR ENDORSE A SPECIFIC MANUFACTURER. THE RDP IN RESPONSIBLE CHARGE SHALL SELECT A MANUFACTURER AND SELECTED FASTENER CAPACITIES SHALL MATCH OR EXCEED THE STRENGTHS LISTED HEREIN. THE FOLLOWING REQUIREMENTS SHALL ALSO BE MET:

   SHEET METAL SCREWS SHALL COMPLY WITH ASTM C 1513-10, ASME B18.6.4-98 (R2005) AND ICC-ES AC 118 AND ALLOWABLE STRENGTH SHALL BE BASED ON INFORMATION PROVIDED IN GX1.31 AND GX1.32. PENETRATION OF SCREWS THROUGH JOINED MATERIAL SHALL NOT BE LESS THAN THREE EXPOSED THREADS.

REVIEWED FOR CODE COMPLIANCE
OPD-0003-13
BY: M.R.Karim
DATE: 12/10/2013
CALIFORNIA BUILDING CODE, 2013

Section Title : OSHPD STANDARD GYPSUM BOARD CEILING DETAILS		OPD No:
Sheet Title : JOISTED GYP BOARD CEILING GENERAL NOTES		CJ0.00

6. DESIGN CRITERIA

   a. BUILDING CODE: 2013 CALIFORNIA BUILDING CODE (2013 CBC), ASCE 7-10, AND AISI S100-07/S2-10. FOR LOAD COMBINATIONS, ALLOWABLE STRESS DESIGN SHALL BE IN ACCORDANCE WITH 2013 CBC SECTION 1605A.3.1.

   b. FASTENER CAPACITIES TABLES WERE DEVELOPED BASED ON ICC REPORTS BY SEVERAL MANUFACTURERS.

   c. THE DESIGN ASSUMES THAT BUILDING ELEMENTS AND SUPPORTS, TO WHICH THE COMPONENTS ADDRESSED IN THIS DOCUMENT ARE ATTACHED, HAVE SUFFICIENT CAPACITY TO CARRY THE LOADS IMPOSED BY THE COMPONENTS IN COMBINATION WITH ALL OTHER LOADS. EVALUATION OF THE CAPACITY OF THESE SUPPORTING BUILDING ELEMENTS IS BEYOND THE SCOPE OF THE OPD.

   d. THIS OPD IS LIMITED TO CEILING ASSEMBLIES HAVING MAXIMUM DEAD WEIGHT OF 4 PSF, INCLUDING LIGHTING FIXTURES (LUMINERIES) AND MECHANICAL SERVICES, EACH WEIGHING LESS THAN 56 LBS AND ATTACHED TO CEILING FRAMING SYSTEM. HEAVIER SYSTEM AND THOSE SUPPORTING LATERAL FORCES FROM PARTITION WALLS ARE OUTSIDE THE SCOPE OF THIS OPD AND WILL REQUIRE PROJECT SPECIFIC DESIGN.

7. THE RDP IN RESPONSIBLE CHARGE SHALL VERIFY THE FIRE RESISTENCE AND ACOUSTICAL RATINGS FOR ALL CEILING ASSEMBLIES.

8. CEILING FIXTURES, TERMINALS, AND DEVICES:

   a. ALL LIGHT FIXTURES, AIR TERMINALS/GRILLS, OR OTHER DEVICES (REFERRED TO ALL BY COMMON TERM FIXTURES HEREAFTER) SHALL BE MOUNTED IN A MANNER THAT WILL NOT COMPROMISE CEILING PERFORMANCE.

   b. ALL FIXTURES SHALL BE SUPPORTED DIRECTLY BY JOIST FRAMING OR BY SUPPLEMENTAL FRAMING WHICH IS SUPPORTED BY JOIST FRAMING AND POSITIVELY ATTACHED WITH SCREWS OR OTHER APPROVED CONNECTORS.

   c. SURFACE MOUNTED FIXTURES SHALL BE ATTACHED TO JOIST FRAMING WITH A POSITIVE CLAMPING DEVICE MADE OF MATERIAL WITH A MINIMUM OF 14 GAGE. ROTATIONAL SPRING CLAMPS DO NOT COMPLY.

   d. ACCESS PANELS: ACCESS TO THE SPACE BETWEEN THE CEILING AND THE FLOOR OR ROOF ABOVE SHALL NOT BE ALLOWED. SMALL ACCESS PANELS FOR THE INSPECTION, ADJUSTMENT, OR REPAIR OF UTILITY SWITCHES, VALVES, SENSORS, ETC. MAY BE ALLOWED IF THE PANEL IS LESS THAN 300 SQUARE INCHES. SUCH PANELS SHALL ALSO HAVE A PERMANENT WARNING LABEL AS FOLLOWS:

      WARNING: 1. DO NOT CLIMB, WALK, OR CRAWL ON THE GYPSUM BOARD CEILING.
      2. DO NOT STORE OR STOW ANYTHING ON THE GYPSUM BOARD CEILING.

   e. ALL FIXURES WEIGHING LESS THAN OR EQUAL TO 10 LB. SHALL HAVE ONE NO. 12 GAUGE SAFETY WIRE CONNECTED FROM FIXURE HOUSING TO STRUCTURE ABOVE. IT IS NOT NECESSARY FOR THESE SAFETY WIRES TO BE TAUT.

   f. ALL FIXURES WEIGHING GREATER THAN 10 LB BUT LESS THAN 56 LB. SHALL HAVE TWO NO. 12 GAUGE SAFETY WIRE CONNECTED FROM FIXURE HOUSING TO STRUCTURE ABOVE. IT IS NOT NECESSARY FOR THESE SAFETY WIRES TO BE TAUT.

   g. ALL FIXURES WEIGHING GREATER THAN 56 LB. SHALL BE SUPPORTED DIRECTLY FROM STRUCTURE ABOVE BY APPROVED HANGERS.

   h. PENDENT-HUNG FIXTURES SHALL BE SUPPORTED DIRECTLY FROM THE STRUCTURE ABOVE USING NO LESS THAN N0. 9-GAUGE WIRE OR AN APPROVED ALTERNATE SUPPORT. THE CEILING SUSPENSION SYSTEM SHALL NOT PROVIDE ANY DIRECT SUPPORT.

   i. ALL RECESSED OR DROP-IN FIXURES SHALL BE SUPPORTED DIRECTLY FROM FIXTURE HOUSING TO THE STRUCTURE ABOVE WITH A MINIMUM OF TWO NO. 12 GAUGE WIRES LOCATED AT DIAGONALLY OPPOSITE CORNERS. LEVELLING OR POSITIONING OF FIXURES MAY BE PROVIDED BY JOIST FRAMING. FIXTURE SUPPORT WIRES MAY BE SLIGHTLY LOOSE TO ALLOW THE FIXTURE TO SEAT IN THE JOIST FRAMING. FIXTURES SHALL NOT BE SUPPORTED FROM JOIST FRAMING IF THE WEIGHT OF THE FIXURES CAUSES TOTAL DEAD LOAD TO EXCEED THE DEFLECTION CAPABILITY OF THE CEILING SUSPENSION SYSTEM.

REVIEWED FOR CODE COMPLIANCE
oshpd
OPD 0003-13
REVIEWED BY: KARIM
DATE: 12/10/2013
CALIFORNIA BUILDING STANDARDS COMMISSION

Section Title : OSHPD STANDARD GYPSUM BOARD CEILING DETAILS			OPD No:
Sheet Title : JOISTED GYP BOARD CEILING GENERAL NOTES			CJ0.01

9. CEILINGS THAT ARE PART OF A FIRE RATED ASSEMBLY: PROVIDE A DETAIL AND DESIGN NUMBER FOR RATED CEILING ASSEMBLIES FROM AN APPROVED TESTING AGENCY. THE COMPONENTS AND INSTALLATION DETAILS CONFORM IN EVERY RESPECT WITH THE LISTED DETAIL AND NUMBER. DETAILS SHALL CLEARLY DEPICT ALL COMPONENTS, INCLUDING INSULATION MATERIALS, FRAMING AND ATTACHMENT OF THE DESIGN SO THAT THE ASSEMBLY CAN BE CONSTRUCTED AND INSPECTED ACCORDINGLY. POP RIVETS, SCREWS, OR OTHER ATTACHMENTS ARE NOT ACCEPTABLE UNLESS SPECIFICALLY DETAILED ON THE DRAWINGS AND APPROVED BY APPROVED TESTING AGENCY.

METAL STUDS

1. COLD-FORMED STEEL LIGHT-FRAME CONSTRUCTION SHALL BE IN ACCORDANCE WITH THE 2013 CBC SECTIONS 2210A AND 2211A.

2. ALL LIGHTGAGE METAL FRAMING SHALL CONFORM WITH THE FOLLOWING:
(SEE GENERAL NOTE #4 FOR ADDITIONAL REQUIREMENTS)

GALVANIZED STUDS & TRACKS: 12 (97), 14 (68) OR 16 (54) GAGE (MILS)	ASTM A653-11, GR50 (Fy = 50,000 psi)
GALVANIZED STUDS & TRACKS: 18 (43) GAGE (MILS) AND LIGHTER SECTIONS	ASTM A653-11, GR 33 (Fy = 33,000 psi)
GALVANIZED BACKING PLATES:	ASTM A653-11, GR50 (Fy = 50,000 psi)
GALVANIZED END CLOSURES, BRIDGING AND ACCESSORIES	ASTM A653-11, GR 33 (Fy = 33,000 psi)

MINIMUM STUD PROPERTIES SHALL BE PER GX1.40, TYP.

REVIEWED FOR CODE COMPLIANCE
OSHPD
OPD-0003-13
BY: M.R.Karim
DATE: 12/10/2013
CALIFORNIA BUILDING CODE, 2013

GYPSUM BOARD INSTALLATION

GYPSUM BOARD INSTALLATION SHALL COMPLY WITH ASTM C840-11:

1. GYPSUM BOARD SHALL CONSIST OF SINGLE-PLY ½" OR 5/8" THICK IN ACCORDANCE WITH ASTM C11-10a.

2. GYPSUM BOARD SHALL BE INSTALLED PERPENDICULAR TO FURRING WITH SCREWS AT 12" ON CENTER MAXIMUM, IN ACCORDANCE WITH ASTM C840-11.

3. GYPSUM BOARD SHALL BE ATTACHED TO FURRING/FRAMING WITH ASTM C1002-07 TYPE S (ASTM A568-11b GRADES 1018 TO 1022) SCREWS (NOT LESS THAN, N0. 6, WITH MAJOR DIAMETER NOT LESS THAN 0.136 IN).

Section Title : OSHPD STANDARD GYPSUM BOARD CEILING DETAILS		OPD No:
Sheet Title : JOISTED GYP BOARD CEILING GENERAL NOTES		CJ0.02

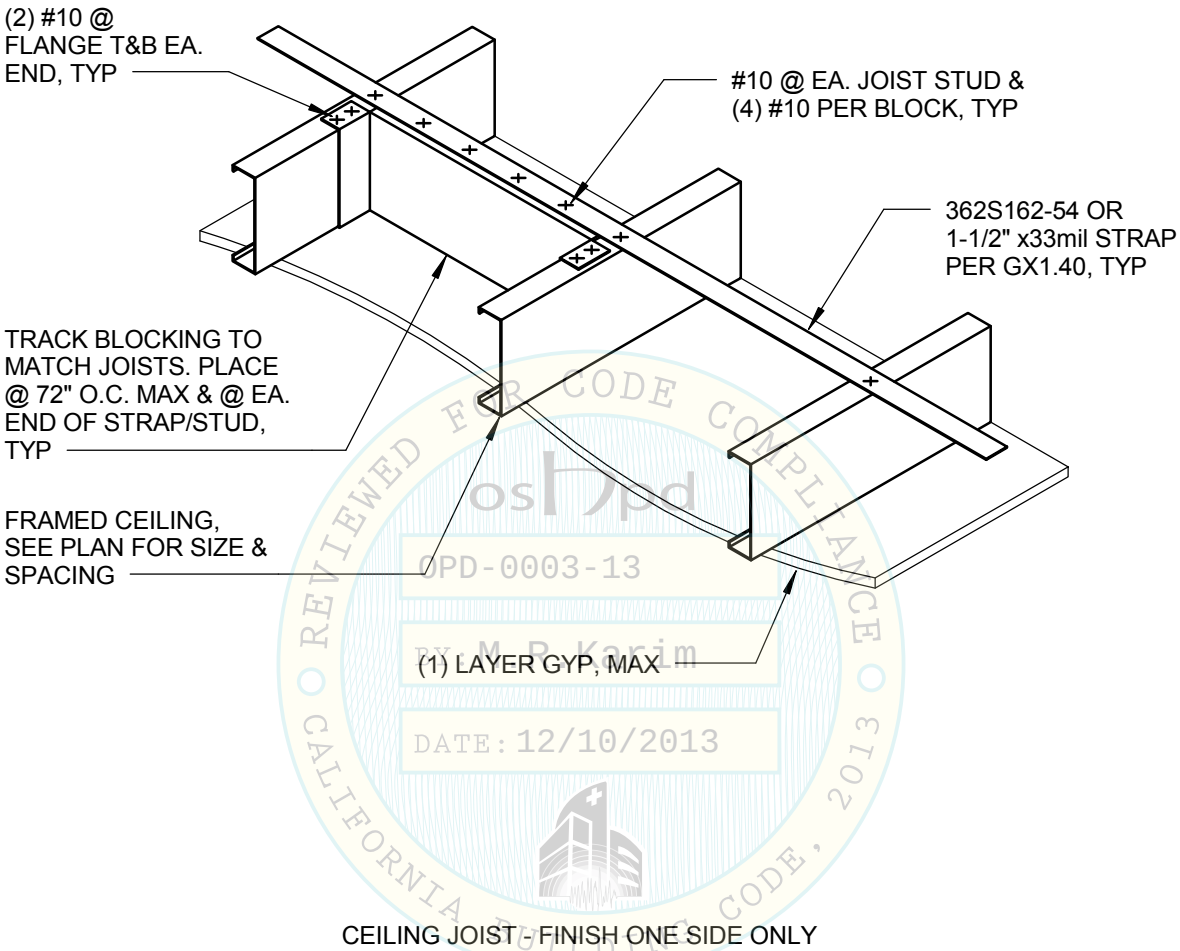

REVIEWED FOR CODE COMPLIANCE
oshpd
OPD-0003-13
BY: M. R. Karim
DATE: 12/10/2013
CALIFORNIA BUILDING CODE, 2013

CEILING JOIST - FINISH ONE SIDE ONLY

Section Title : OSHPD STANDARD GYPSUM BOARD CEILING DETAILS		OPD No:
Sheet Title : JOISTED GYP BOARD CEILING STRAP BLOCKING DETAIL		CJ2.10

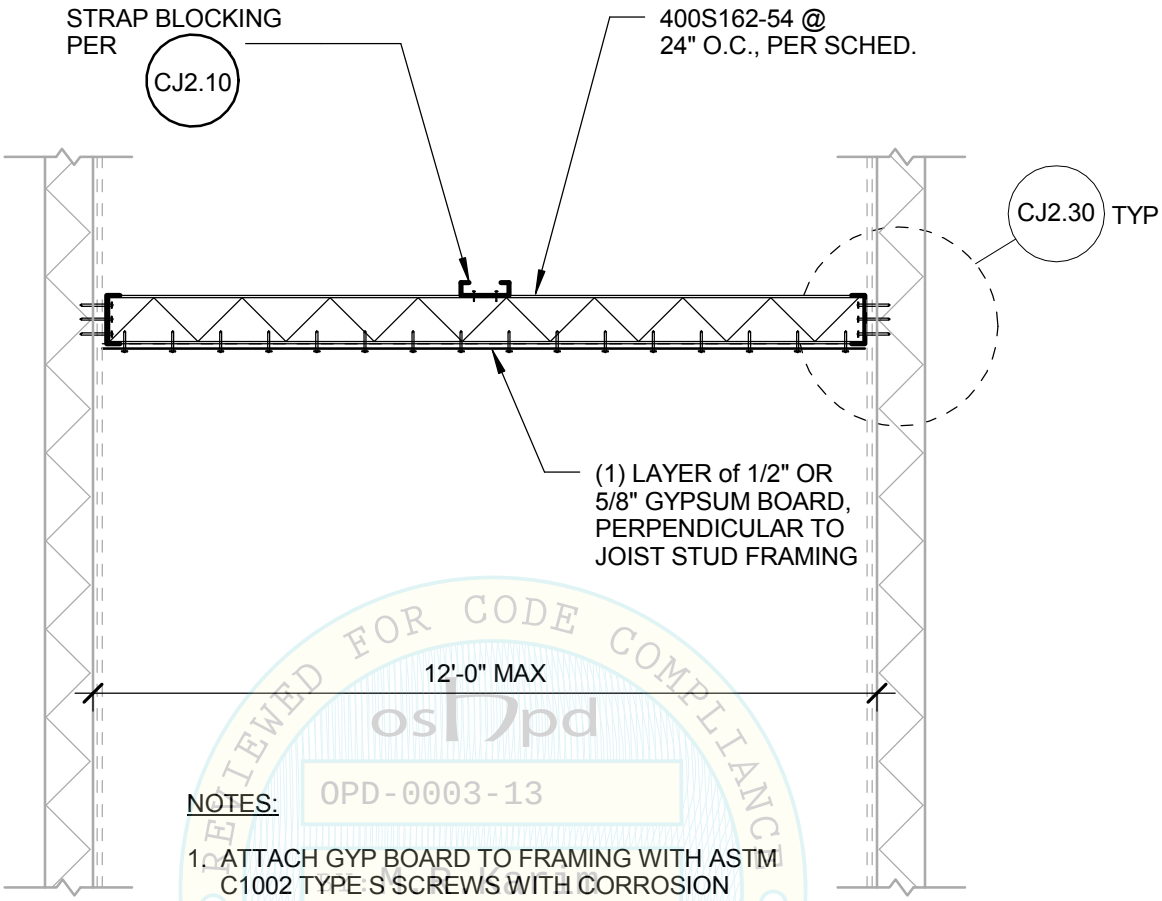

REVIEWED FOR CODE COMPLIANCE
OSHPD
OPD-0003-13
CALIFORNIA BUILDING CODE, 2013

NOTES:

1. ATTACH GYP BOARD TO FRAMING WITH ASTM C1002 TYPE S SCREWS WITH CORROSION RESISTANT TREATMENT AT 12" O.C. MAX.

2. WHEN GYPSUM BOARD IS TO BE APPLIED TO BOTH CEILING AND WALLS, GYPSUM BOARD SHALL BE APPLIED FIRST TO THE CEILING AND THEN TO THE WALLS IN ACCORDANCE WITH ASTM C840.

JOIST SPAN SCHEDULES

JOIST STUD SIZE	S_{DS} (g)	BRIDGING LOCATION	F_P ALLOWABLE FOR WALL DESIGN
SCHEDULE A - JOIST CONNECTION FASTENS THROUGH (2) LAYERS OF GYPSUM BOARD MAX			
400S162-54	$S_{DS} \leq 1.15$	MIDPOINT	6.6 plf
	$1.15 < S_{DS} \leq 1.73$	MIDPOINT	9.9 plf
	$1.73 < S_{DS} \leq 2.59$	MIDPOINT	14.9 plf

1. SEE CJ2.31 FOR TYPICAL 4'-1" x 2'-1" MAX OPENING IN JOISTED CEILING.

Section Title : OSHPD STANDARD GYPSUM BOARD CEILING DETAILS	OPD No:
Sheet Title : JOISTED GYP BOARD CEILING MAXIMUM SPANS	CJ2.20

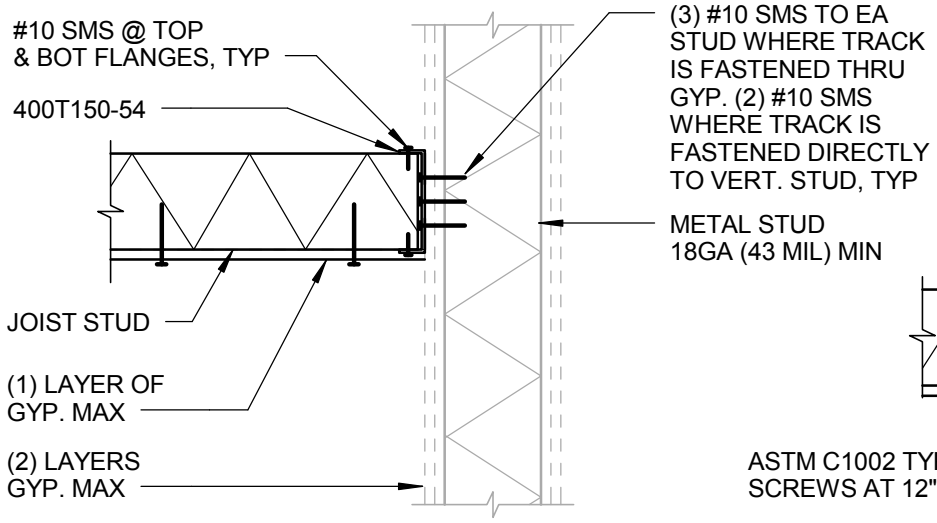

A SECTION AT TYP. STUD

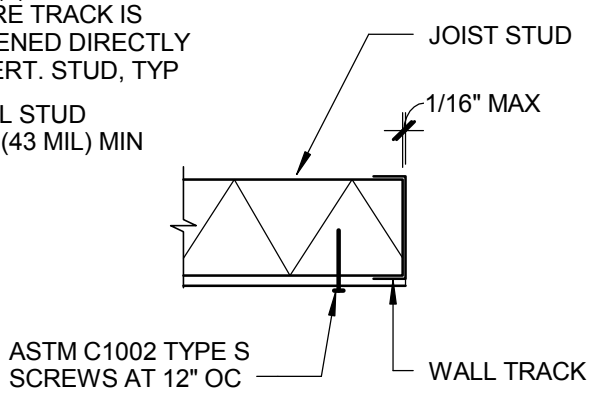

D GYP BOARD ATTACHMENT

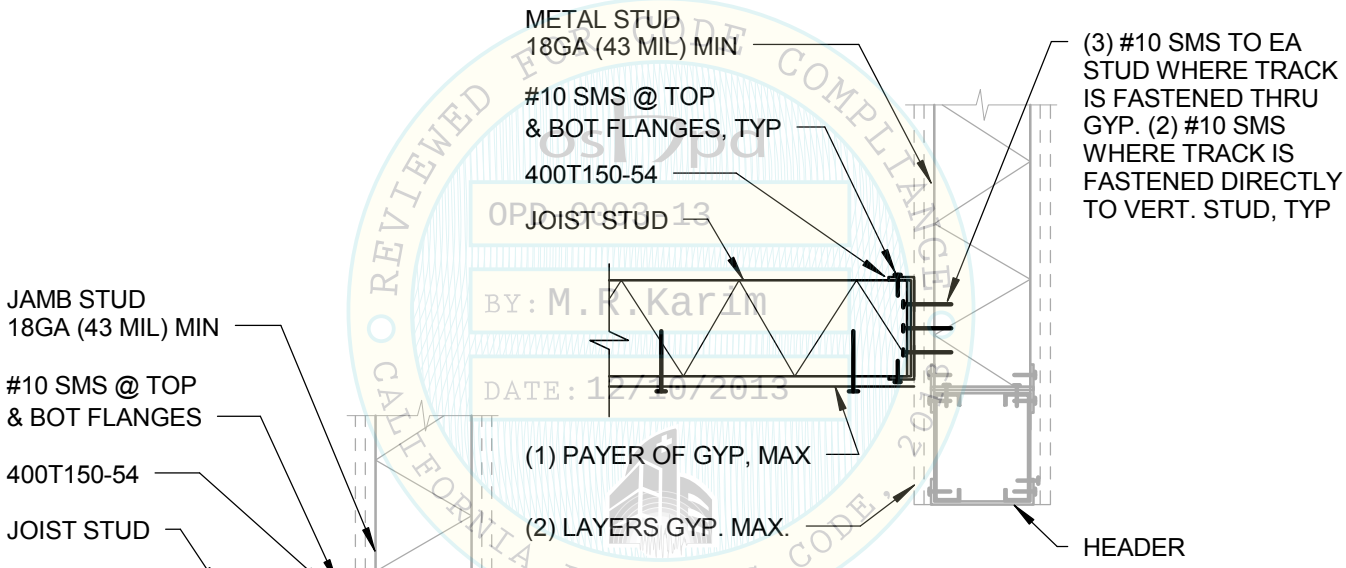

C SECTION AT OPENING

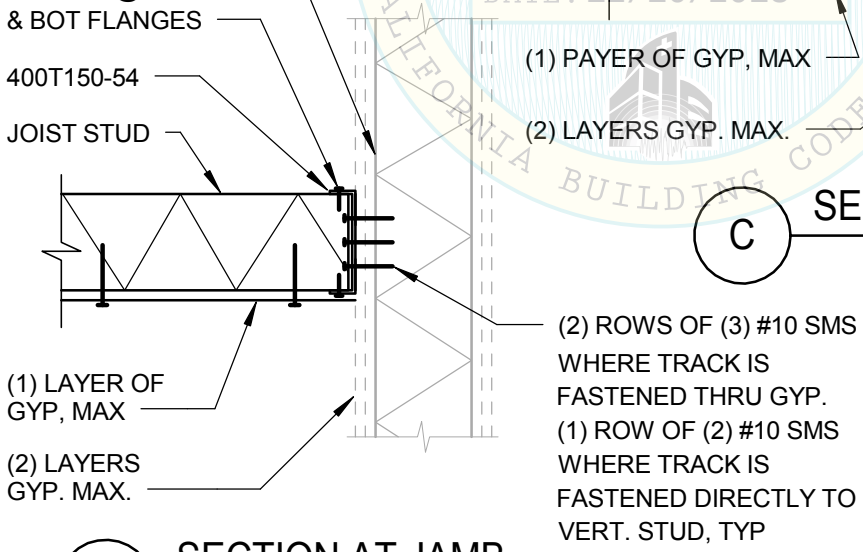

B SECTION AT JAMB

REVIEWED FOR CODE COMPLIANCE
osipd
OPD 0003-13
BY: M.R.Karim
DATE: 12/10/2013
CALIFORNIA BUILDING CODE

Section Title : OSHPD STANDARD GYPSUM BOARD CEILING DETAILS		OPD No:
Sheet Title : JOISTED GYP BOARD CEILING CONNECTIONS		CJ2.30

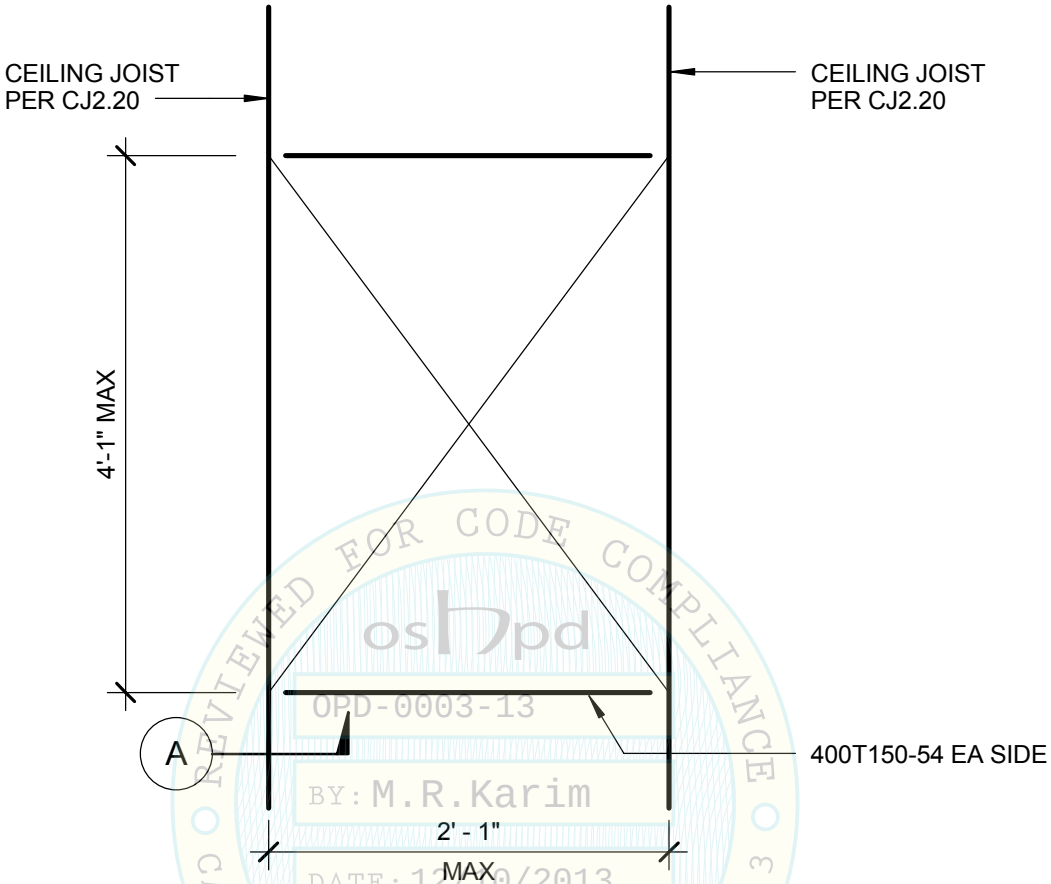

REVIEWED FOR CODE COMPLIANCE
oshpd
OPD-0003-13
BY: M.R.Karim
DATE: 12/10/2013
CALIFORNIA BUILDING CODE, 2013

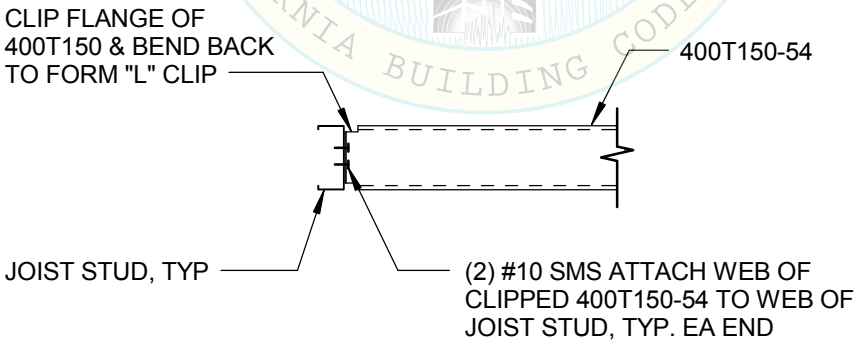

A TYPICAL CONNECTION

Section Title : OSHPD STANDARD GYPSUM BOARD CEILING DETAILS		OPD No:
Sheet Title : JOISTED GYP BOARD CEILING AT OPENINGS		CJ2.31

OSHPD contact for question or comment:

OPD@oshpd.ca.gov

2013 CBC STANDARD SUSPENDED CEILING DETAILS FOR ACOUSTICAL TILE OR LAY-IN PANEL CEILINGS

DRAFT

Comments are denoted via text boxes throughout this document.
Please advise regarding any questions or clarifications.
Thank you.

DRAWING INDEX

Lamb Oxford Comments - Nov 28, 2013

REVISIONS

CLX **DRAWING INDEX, NARRATIVE AND FLOWCHART**

CLX.00 DRAWING INDEX - PAGE 1 OF 2
CLX.01 DRAWING INDEX - PAGE 2 OF 2
CLX.02 NARRATIVE - PAGE 1 OF 3
CLX.03 NARRATIVE - PAGE 2 OF 3
CLX.04 NARRATIVE - PAGE 3 OF 3
CLX.05 FLOWCHART - OVERVIEW OF OPD USE
CLX.06 FLOWCHART - CEILING GRID
CLX.07 FLOWCHART - COMPRESSION STRUT AND OBSTRUCTIONS
CLX.08 FLOWCHART – CONNECTIONS TO STRUCTURE

CL0 **GENERAL NOTES**

CL0.00 GENERAL NOTES - PAGE 1 OF 4
CL0.01 GENERAL NOTES - PAGE 2 OF 4
CL0.02 GENERAL NOTES - PAGE 3 OF 4
CL0.03 GENERAL NOTES - PAGE 4 OF 4

CL1 **SUSPENDED CEILING FRAMING COMPONENTS**

CL1.10 POWER ACTUATED FASTENER (PAF) IN CONCRETE FILLED METAL DECK OR CONCRETE SLAB - PAGE 1 OF 2

CL1.11 POWER ACTUATED FASTENER (PAF) IN CONCRETE FILLED METAL DECK OR CONCRETE SLAB - PAGE 2 OF 2

CL1.12 POWER ACTUATED FASTENER (PAF) IN STEEL
CL1.20 EXPANSION ANCHOR GENERAL NOTES
CL1.21 EXPANSION ANCHOR ALLOWABLE STRENGTHS
CL1.30 SHEET METAL SCREW GENERAL NOTES
CL1.31 SHEET METAL SCREW ALLOWABLE STRENGTHS - PAGES 1 OF 2
CL1.32 SHEET METAL SCREW ALLOWABLE STRENGTHS - PAGES 2 OF 2
CL1.40 METAL STUD PROFILES

CL2 **SUSPENDED CEILING BRACING ASSEMBLY**

CL2.10 SUSPENDED CEILING BRACING ASSEMBLY
CL2.20 TYPICAL CEILING PLAN FOR $1.73 < S_{DS} \leq 2.50$ AND $z/h \leq 1.0$
CL2.21 TYPICAL CEILING PLAN FOR $1.15 < S_{DS} \leq 1.73$ AND $z/h \leq 1.0$
CL2.22 TYPICAL CEILING PLAN FOR $S_{DS} \leq 1.15$ AND $z/h \leq 1.0$
CL2.30 CORRIDOR CEILING PLAN
CL2.40 EXPANSION JOINT AT INTERSECTIONS
CL2.50 TYPICAL CEILING SECTION AT EXITWAY CORRIDORS
CL2.60 CEILING PERIMETER INCLUDING NON-EXITWAY CORRIDORS
CL2.70 CUBICLE CURTAIN/ I.V. TRACK
CL2.80 LIGHT FIXTURE/ AIR TERMINAL SUPPORT DETAIL

DRAFT

Section Title : OSHPD STANDARD SUSPENDED CEILING DETAILS

OPD No:

Sheet Title : DRAWING INDEX - PAGE 1 OF 2

CLX.00

DRAWING INDEX

Lamb Oxford Comments - Nov 28, 2013

REVISIONS

CL3 **COMPRESSION STRUT DETAILS**

CL3.10 CHANNEL TYPE COMPRESSION STRUT
CL3.20 TUBE TYPE COMPRESSION STRUT

CL4 **HANGER AND BRACING WIRE CONNECTION DETAILS**

CL4.10 TYPICAL WIRE TURNS
CL4.11 CONNECTION MATRIX

CL4.21 HANGER WIRE – CONCRETE OVER METAL DECK
CL4.22 HANGER WIRE – CONCRETE SLAB, BEAM, OR JOIST
CL4.23 HANGER WIRE – STRUCTURAL STEEL
CL4.24 HANGER WIRE – SAWN TIMBER
CL4.25 HANGER WIRE – METAL STUD WALL

CL4.31 BRACING WIRE – CONCRETE OVER METAL DECK
CL4.32 BRACING WIRE – CONCRETE SLAB, BEAM, OR JOIST
CL4.33 BRACING WIRE – STRUCTURAL STEEL
CL4.34 BRACING WIRE – SAWN TIMBER
CL4.35 BRACING WIRE – METAL STUD WALL

CL5 **COMPRESSION STRUT CONNECTION DETAILS**

CL5.10 CONNECTION MATRIX
CL5.20 CONNECTION TO CONCRETE FILLED METAL DECK
CL5.30 CONNECTION TO CONCRETE SLAB, BEAM OR JOIST
CL5.40 CONNECTION TO STRUCTURAL STEEL
CL5.50 CONNECTION TO SAWN TIMBER WITH GYPSUM BOARD
CL5.60 CONNECTION TO SAWN TIMBER WITHOUT GYPSUM BOARD

CL6 **SPECIAL DETAILS**

CL6.10 OBSTRUCTION – COUNTER SLOPING WIRES AND TRAPEZE CONDITION
CL6.20 OBSTRUCTION – BRIDGE AT LARGE OFFSET CONDITION
CL6.30 OBSTRUCTION – COUNTER SLOPING COMPRESSION STRUTS
CL6.40 OBSTRUCTION – RECESSED LIGHT AT PERIMETER
CL6.50 OBSTRUCTION – STUD KICKER TO OVERHEAD
CL6.60 OBSTRUCTION – STUD KICKER TO WALL

DRAFT

Section Title : OSHPD STANDARD SUSPENDED CEILING DETAILS

OPD No:

Sheet Title : DRAWING INDEX - PAGE 2 OF 2

CLX.01

NARRATIVE Lamb Oxford Comments - Nov. 22. 2013

2013 California Building Code (2013 CBC) Standard Ceiling Details document contains OSHPD Pre-Approved Details (OPD), which may be incorporated into construction documents. These details have been reviewed for compliance with the 2013 CBC and, when used as shown, without modifications, are deemed to comply with code. They are intended to cover common conditions that occur on many projects. It is anticipated that use of these details will facilitate the design, review, and construction process.

The Narrative and supporting Flowchart, which follows the Narrative, are provided to assist in selecting applicable details from the OPD for incorporation into the construction documents. It is to be used only as a guide and does not provide complete step-by-step instructions for use of the OPD. Narrative comment numbers correspond to the numbered items on the Flowchart.

The following steps apply to use of OPD:

1. Define Project Parameters

A. Short Period Spectral Response Acceleration (SDS) for project site.

i. The ("S_{DS}") identified for use with the OPD shall not be lower than the SDS documented in the project General Notes and/or Specifications.

B. Type of construction.

i. The Registered Design Professional (RDP) in responsible charge shall identify the floor and/or roof framing materials which apply to the use of the OPD under consideration (e.g. wood, concrete, metal deck).

C. Project specific geometry and other conditions.

i. The RDP in responsible charge shall identify the geometry which applies to the use of the OPD under consideration (e.g. floor-to-ceiling height, etc).

ii. The RDP in responsible charge shall identify other unique conditions which apply to the use of the OPD under consideration (e.g. mechanical duct conflicts and other obstructions).

2. Verify Applicability of OPD
Refer to PIN 51.

OPD allow design professionals to incorporate pre-approved details into their construction documents. Projects that utilize OPD shall satisfy the following conditions.

A. The RDP in responsible charge shall verify the applicability of the OPD for their specific project conditions. For example, when designing a fire-rated ceiling, use of ceiling details OPD are acceptable provided the OPD are compatible with the construction requirements for the fire rated assembly.

B. The details must be directly applicable to the project conditions. For example, OPD for attachment of a ceiling below a steel deck with concrete fill are not applicable to wood frame construction.

C. Substitutions of items shown in the OPD are not permitted, unless specifically allowed by the OPD. For example, a power-actuated fastener (PAF) may not be substituted in a connection detail that specifies an expansion anchor, unless the OPD specifically permits it. Use of post-installed anchors from different manufacturers is permitted, provided the substituted anchors meet the installation criteria and Allowable Strengths as specified in the OPD. See item #6 of the general notes on CL0.00.

D. Changes to the OPD to accommodate project conditions are not permitted. In such cases, project specific details are required.

DRAFT

Section Title : OSHPD STANDARD SUSPENDED CEILING DETAILS			OPD No:
Sheet Title : NARRATIVE - PAGE 1 OF 3			CLX.02

3. Select Appropriate Details from OPD

Review OPD General Notes before the start of OPD selection process.

A. The GENERAL NOTES section of this OPD document provides detailed specification of the materials and the workmanship associated with the details. The RDP in responsible charge shall confirm the applicability of the OPD details and the specifications noted in this section (CL0.00, CL0.01, CL0.02, CL0.03). Refer to CL2.10 to confirm general configuration requirements.

B. Typical geometric conditions shall be verified from CL2.20-CL2.22. Refer to Section 10 of the GENERAL NOTES for system component requirements.

C. Ceiling boundary condition shall be provided in conformance with the requirements detailed on CL2.50 and CL2.60. Refer to Section 11 of the GENERAL NOTES for system installation requirements.

D. Detailing requirements needed to comply with the requirements for both attached and free joint conditions in corridor ceilings are shown on CL2.30, CL2.40, CL2.50 and CL2.60. Refer to Section 12 of the GENERAL NOTES.

E. CL2.70 and CL2.80 show the necessary detailing requirements for the support of Curtain Tracks, Air Terminals, and Light Fixtures suspended directly from the ceiling system. Refer to Section 15 of the GENERAL NOTES.

F. Hanger and Bracing Wire specifications are shown in Section 9 of the GENERAL NOTES. CL4.10 graphically illustrates the requirements of the specifications at the terminal ends of the wire.

G. Compression Strut requirements are detailed in CL3.XX. Channel and Electrical Metallic Tubing (EMT) are the two types of Compression Struts that are included within the scope of this OPD. Refer to Section 13 of the GENERAL NOTES for system installation requirements.

1. Channel Type Compression Strut details are shown on CL3.10.
2. Electrical Metallic Tubing (EMT) Compression Strut details are shown on CL3.20.

H. Requirements for detailing at obstructions between the ceiling and the support structure are illustrated in CL6.XX. Different obstruction types require special detailing of Hanger Wires, Bracing Wires, and Compression Struts. Refer to Section 14 of the GENERAL NOTES for system installation requirements.

1. Requirements for detailing at obstructions at Hanger and Bracing Wires are shown on CL6.10. CL6.20, CL6.40, CL6.60, CL6.70.

2. Requirements for detailing at obstructions at Compression Struts are shown on CL6.20. CL6.30, CL6.50.

I. Connection detail requirements for the connection of Hanger and Bracing Wire to support structure are illustrated in Details CL4.XX. Detail requirements for attachment to various structural materials and systems are included in these details. Refer to Section 14 of the GENERAL NOTES for system installation requirements. Refer to Details CL1.XX for fastener design capacities and component properties.

J. Connection detail requirements for the connection of Compression Strut to support structure are illustrated in Details CL5.XX. Detail requirements for attachment to various structural materials and systems are included in these details. Refer to Section 14 of the GENERAL NOTES for system installation requirements. Refer to Details CL1.XX for fastener design capacities and component properties.

DRAFT

Section Title : OSHPD STANDARD SUSPENDED CEILING DETAILS			OPD No:
Sheet Title : NARRATIVE - PAGE 2 of 3			CLX.03

4. Implementation and Use of OPD During Plan Review
Refer to PIN 51.

5. Implementation and Use of OPD During Construction Process
Refer to PIN 51.

A. During construction, OPD are treated as any other detail in the approved documents.

B. Pre-approved details submitted after the construction documents have been approved and a building permit has been issued shall be used and/or processed in accordance with Code Application Notice 2-107.4 "Amended Construction Documents." Pre-approved details may be applied as alternates to the approved details shown on the permitted construction documents only on a one for one basis and with written consent of the registered design professional and the registered design professional in responsible charge and in concurrence with OSHPD field staff. Pre-approved details are exempt from additional plan review provided they are incorporated without any modification. Pre-approved details are subject to field confirmation during which the applicability of pre-approved details for specific project conditions shall be evaluated.

C. Changing the scope of a project (adding additional ceilings, for example) does constitute a material alteration to the project, even if OPD can be used for all conditions. In such a case, an Amended Construction Document shall be submitted to OSHPD field staff for review.

DRAFT

Section Title : OSHPD STANDARD SUSPENDED CEILING DETAILS			OPD No:
Sheet Title : NARRATIVE - PAGE 3 of 3			CLX.04

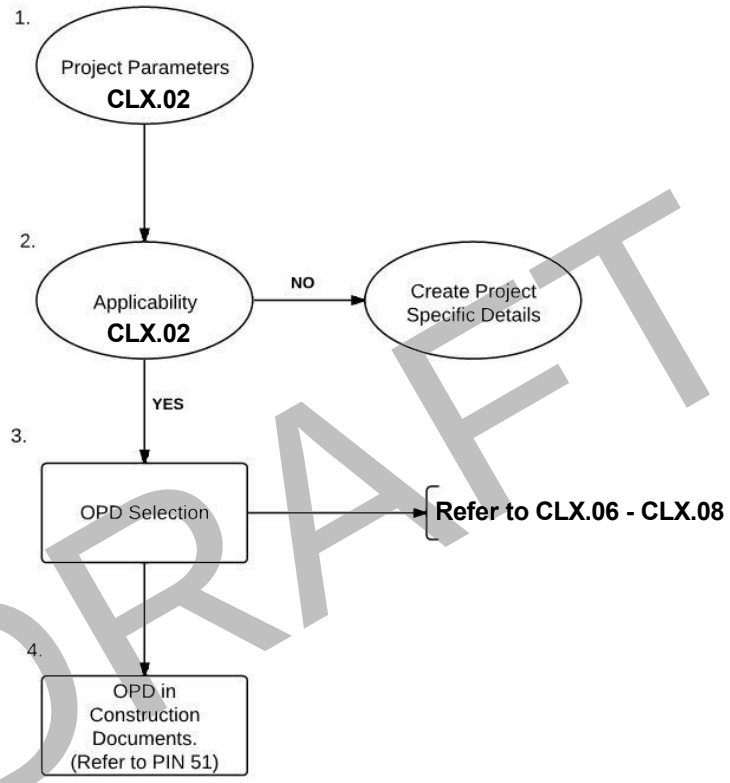

DRAFT

Section Title : OSHPD STANDARD SUSPENDED CEILING DETAILS			OPD No:
Sheet Title : FLOWCHART - OVERVIEW OF OPD USE			CLX.05

Lamb Oxford Comments - Nov. 22. 2013

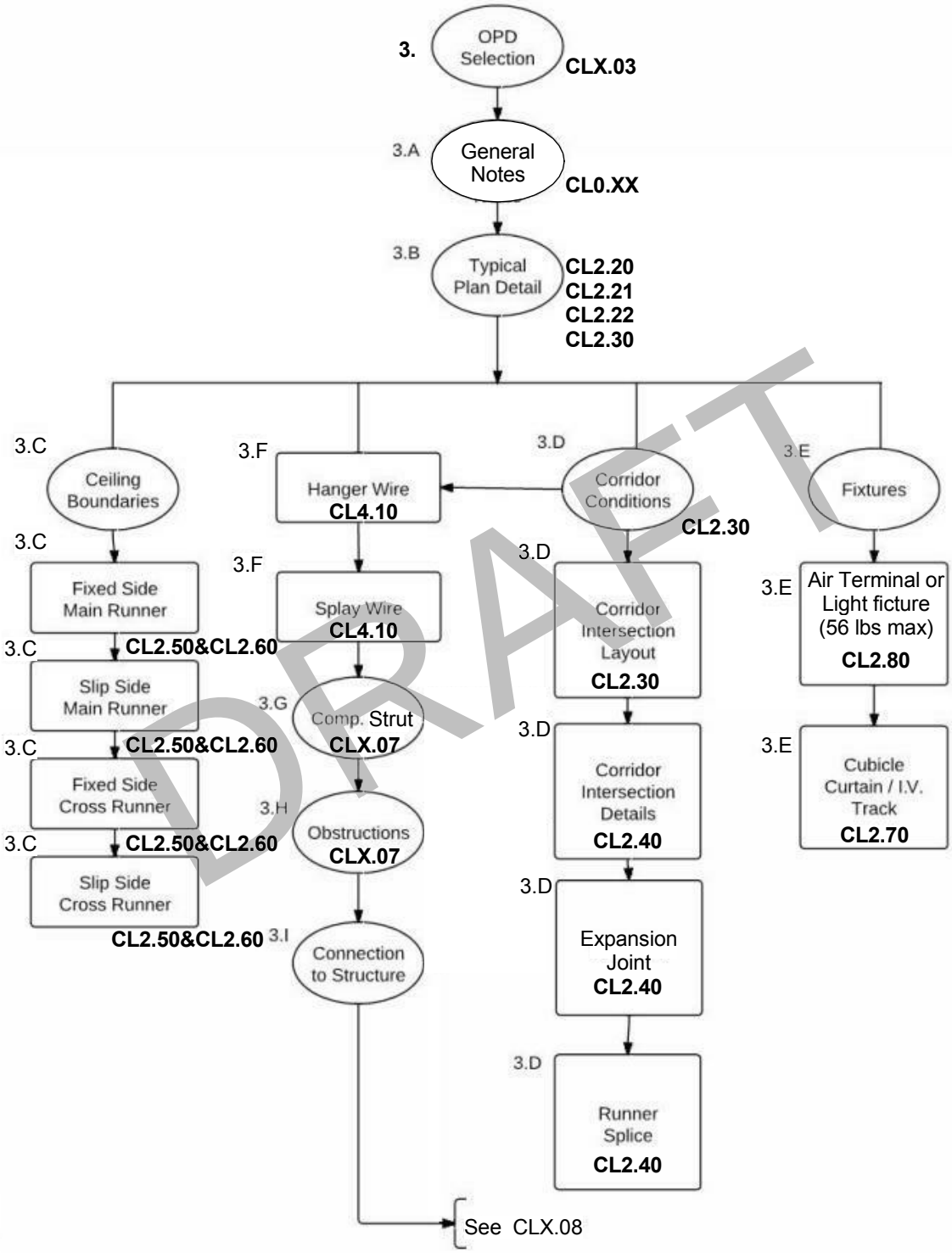

DRAFT

Section Title : OSHPD STANDARD SUSPENDED CEILING DETAILS	OPD No:
Sheet Title : FLOWCHART - CEILING GRID	CLX.06

Lamb Oxford Comments - Nov. 22. 2013

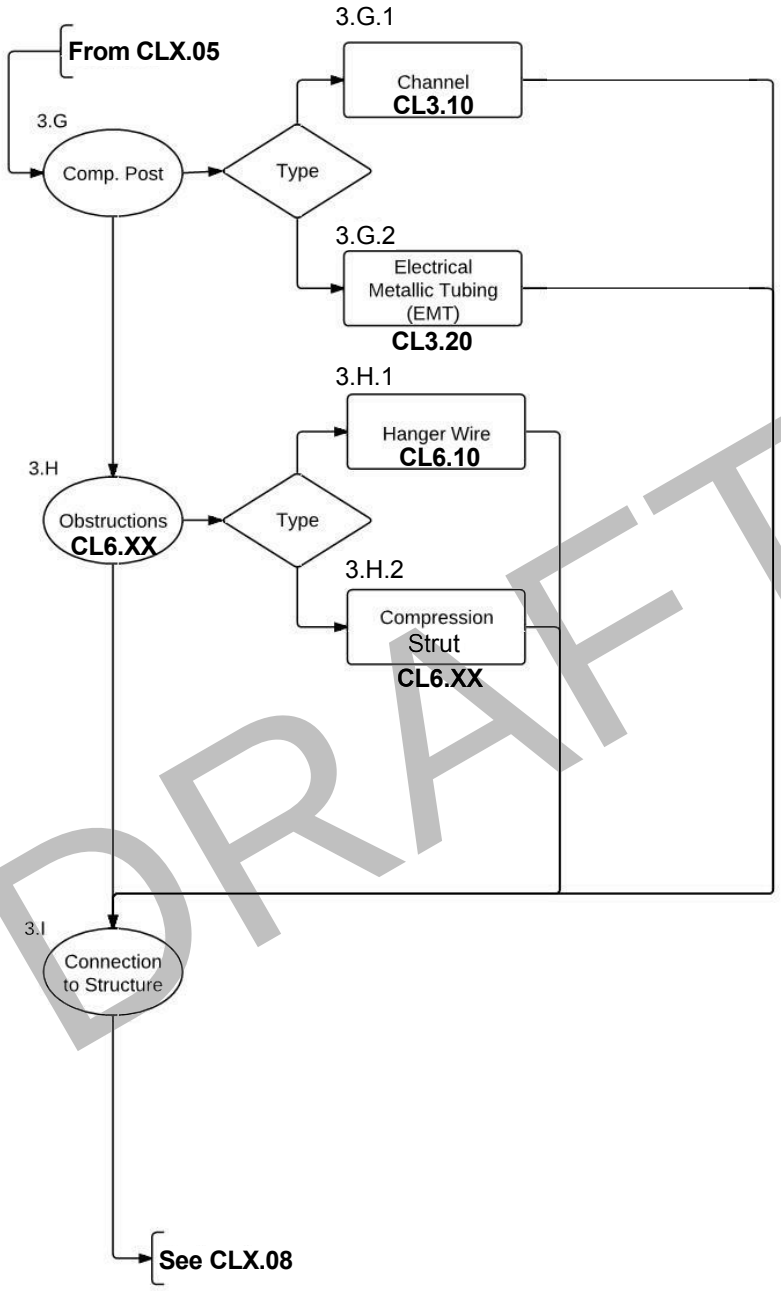

DRAFT

Section Title : OSHPD STANDARD SUSPENDED CEILING DETAILS		OPD No:
Sheet Title : FLOWCHART - COMPRESSION STRUT AND OBSTRUCTIONS		CLX.07

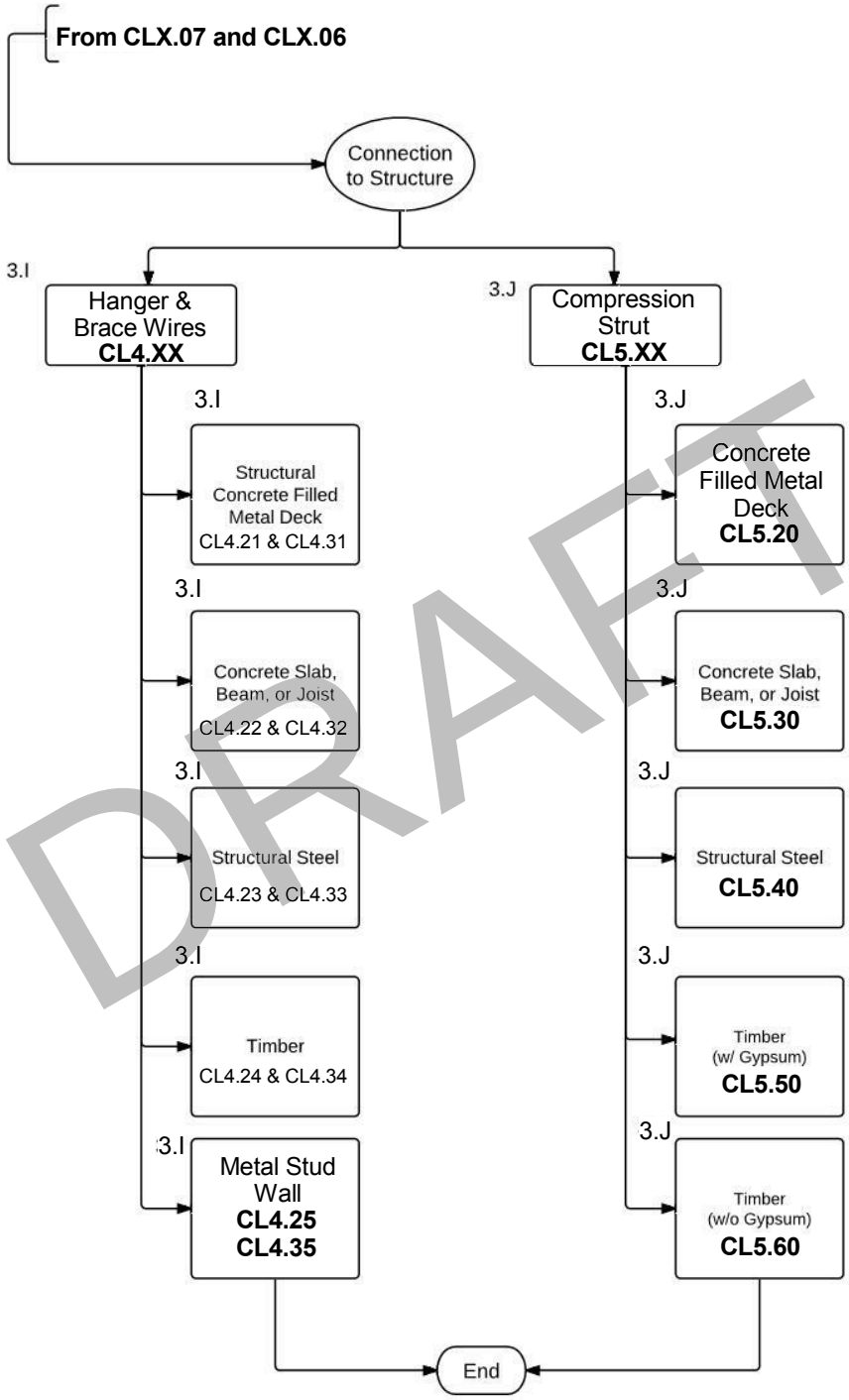

DRAFT

Section Title : OSHPD STANDARD SUSPENDED CEILING DETAILS	OPD No:
Sheet Title : FLOWCHART - CONNECTIONS TO STRUCTURE	CLX.08

GENERAL NOTES

Lamb Oxford Comments - Nov. 22. 2013

1. CONSTRUCTION, WORKMANSHIP AND MATERIAL SHALL CONFORM TO THE 2013 CALIFORNIA BUILDING STANDARDS CODE (CBSC 2013).

2. THE CONTRACTOR SHALL NOTIFY OSHPD AND THE REGISTERED DESIGN PROFESSIONAL (RDP) IN RESPONSIBLE CHARGE WHERE A CONFLICT OR DISCREPANCY OCCURS BETWEEN THE CONSTRUCTION DRAWINGS AND ANY OTHER PORTION OF THE CONSTRUCTION DOCUMENTS, FIELD CONDITIONS, OR WHERE ANY CONDITIONS ARISE NOT COVERED BY THESE DOCUMENTS WHEREIN WORK WILL NOT COMPLY WITH CODE REQUIREMENTS.

3. THE INTENT OF THE DRAWINGS AND SPECIFICATIONS IS TO CONSTRUCT THE HOSPITAL BUILDING IN ACCORDANCE WITH THE CALIFORNIA BUILDING STANDARD CODE, 2013 (CBSC 2013). SHOULD ANY CONDITION DEVELOP NOT COVERED BY THE APPROVED CONSTRUCTION DOCUMENTS WHEREIN THE WORK WILL NOT COMPLY WITH CBSC 2013, A CHANGE ORDER DETAILING AND SPECIFYING THE REQUIRED WORK SHALL BE SUBMITTED TO AND APPROVED BY OSHPD BEFORE PROCEEDING WITH THE WORK.

4. GALVANIZED METAL STUDS, TRACKS AND SHEET STEEL SHALL CONFORM TO ASTM A653-09a MATERIAL, OR OTHER EQUIVALENT ASTM LISTED MATERIALS IN SECTION A2.1 OF THE AISI SI00-07/S2-10; NORTH AMERICAN SPECIFICATION FOR THE DESIGN OF COLD-FORMED STEEL STRUCTURAL MEMBERS WITH SUPPLEMENT 2, DATED 2010, WITH A MINIMUM YIELD STRENGTH OF 33 KSI FOR 43 MIL (18 GAGE) AND LIGHTER AND MINIMUM YIELD STRENGTH OF 50 KSI FOR HEAVIER GAGES.

   METAL STUDS AND TRACKS SHALL BE OF SIZE, THICKNESS AND SECTION PROPERTIES SHOWN ON TABLES 1-1, 1-2 AND 1-3 OF THE AISI MANUAL, COLD-FORMED STEEL DESIGN, 2008 EDITION. THE RDP IN RESPONSIBLE CHARGE SHALL OBTAIN OSHPD APPROVAL FOR ANY SUBSTITUTIONS.

5. ELECTRICAL METALLIC TUBE (EMT) SHALL BE ANSI C80.3/UL 797 CARBON STEEL WITH G90 GALVANIZING. EMT SHALL HAVE MINIMUM YIELD STRENGTH OF (Fy =) 30 KSI AND MINIMUM ULTIMATE STRENGTH OF (Fu =) 48 KSI.

6. THESE OPD REFER TO FASTENER TYPE AND SIZE BUT DO NOT SPECIFY OR ENDORSE A SPECIFIC MANUFACTURER. THE RDP IN RESPONSIBLE CHARGE SHALL SELECT A MANUFACTURER AND SELECTED FASTENER CAPACITIES SHALL MATCH OR EXCEED THE STRENGTHS LISTED HEREIN. THE FOLLOWING REQUIREMENTS SHALL ALSO BE MET:

   a. SHEET METAL SCREWS SHALL COMPLY WITH ASTM C 1513-10, ASME B18.6.4-98 (R2005) AND ICC-ES AC 118 AND ALLOWABLE STRENGTH SHALL BE BASED ON INFORMATION PROVIDED IN CL1.31 AND CL1.32. PENETRATION OF SCREWS THROUGH JOINED MATERIAL SHALL NOT BE LESS THAN THREE EXPOSED THREADS.

   b. WELDING SHALL BE IN ACCORDANCE WITH AWS D1.3 USING E60XX SERIES ELECTRODES. FIELD WELDING SHALL HAVE SPECIAL INSPECTION IN ACCORDANCE WITH 2013 CBC SECTION 1705A.2.

   c. POST- INSTALLED ANCHORS (E.G. EXPANSION ANCHORS, SCREW ANCHORS AND POWER ACTUATED FASTENERS) SHALL HAVE SPECIAL INSPECTION AND TESTING IN ACCORDANCE WITH THE 2013 CBC SECTIONS 1705A.3 & 1913A.7. FOR QUALIFICATION, DESIGN AND USE OF POST-INSTALLED ANCHORS IN CONCRETE SEE THE 2013 CBC SECTIONS 1616A.1.19 AND 1908A.1.1. LISTING OF CURRENT ICC-ES EVALUATION REPORTS (OR REPORTS FROM OTHER TESTING AGENCIES ACCEPTABLE TO OSHPD) SHALL BE REQUIRED FOR FASTENER USED.

   d. POWER-ACTUATED FASTENERS (PAF), POWDER DRIVEN FASTENERS (PDF), POWER DRIVEN PINS (PDP) AND SHOT PINS ALL REPRESENT THE SAME FASTENER AND WILL HEREAFTER BE REFERRED TO AS POWER ACTUATED FASTENERS (PAF). PAF'S SHALL SATISFY THE CURRENT AC70-ACCEPTANCE CRITERIA FOR FASTENERS POWER-DRIVEN INTO CONCRETE, STEEL AND MASONRY ELEMENTS AND THE 2013 CBC SECTION 1908A.1.1. LISTING OF CURRENT ICC ES EVALUATION REPORTS (OR REPORTS FROM OTHER TESTING AGENCIES ACCEPTABLE TO OSHPD) SHALL BE REQUIRED FOR FASTENERS USED.

   e. FOR PAF INSTALLED IN STEEL THE FASTENER PENETRATION SHALL HAVE THE ENTIRE POINTED END OF THE FASTENER DRIVEN THROUGH THE STEEL MEMBER, EXCEPT AS NOTED IN CURRENT REPORTS FROM TESTING AGENCIES ACCEPTABLE TO OSHPD.

DRAFT

Section Title : OSHPD STANDARD SUSPENDED CEILING DETAILS			OPD No:
Sheet Title : GENERAL NOTES - PAGE 1 OF 4			CL0.00

RC1 - 7.a: ASTM E580-11b, Section 2.2 also references CISCA guidelines for Seismic Zones 3 and 4.

7. DESIGN CRITERIA

a. BUILDING CODE: 2013 CALIFORNIA BUILDING CODE (2013 CBC), ASCE 7-10, AISI S100-07/S2-10, ASTM E580-11b, C635-12, AND C636-08. FOR LOAD COMBINATIONS, ALLOWABLE STRESS DESIGN SHALL BE IN ACCORDANCE WITH 2013 CBC SECTION 1605A.3.1.

b. FASTENER CAPACITIES TABLES WERE DEVELOPED BASED ON ICC REPORTS BY SEVERAL MANUFACTURERS.

c. THE DESIGN ASSUMES THAT BUILDING ELEMENTS AND SUPPORTS, TO WHICH THE COMPONENTS ADDRESSED IN THIS DOCUMENT ARE ANCHORED, HAVE SUFFICIENT CAPACITY TO CARRY THE LOADS IMPOSED BY THE COMPONENTS IN COMBINATION WITH ALL OTHER LOADS. EVALUATION OF THE CAPACITY OF THESE SUPPORTING BUILDING ELEMENTS IS BEYOND THE SCOPE OF THE OPD.

d. THIS OPD IS LIMITED TO CEILING ASSEMBLIES HAVING MAXIMUM DEAD WEIGHT OF 4 PSF, INCLUDING LIGHTING FIXTURES (LUMINERIES) AND MECHANICAL SERVICES, EACH WEIGHING LESS THAN 56 LBS AND ATTACHED TO CEILING FRAMING SYSTEM. HEAVIER SYSTEM AND THOSE SUPPORTING LATERAL FORCES FROM PARTITION WALLS ARE OUTSIDE THE SCOPE OF THIS OPD AND WILL REQUIRE PROJECT SPECIFIC DESIGN.

8. THE RDP IN RESPONSIBLE CHARGE SHALL VERIFY THE FIRE RESISTENCE AND ACOUSTICAL RATINGS FOR ALL CEILING ASSEMBLIES.

9. "CEILING WIRE" SHALL CONFORM WITH GALVANIZED SOFT ANNEALED MILD STEEL WIRE AS DEFINED IN ASTM A641 (CLASS 1 COATING) WITH 70 KSI MINIMUM TENSILE STRENGTH:

a. FOUR (4) TWISTS OF WIRE WITHIN 1.5" DEVELOPS THE ALLOWABLE LOAD FOR THE WIRE.

b. THREE (3) TWISTS WITHIN 3" MAY BE USED TO DEVELOP THE MAXIMUM 50% OF ALLOWABLE LOAD.

10. SUSPENSION SYSTEM COMPONENTS SHALL COMPLY WITH ASTM C635 AND E580 SECTION 5.1:

a. THE CEILING GRID SYSTEM SHALL BE RATED HEAVY DUTY AS DEFINED BY ASTM C635.

b. HANGER AND BRACING WIRES SHALL BE #12 GAGE (0.106" DIAMETER), SOFT ANNEALED, AND GALVANIZED STEEL WIRES WITH CLASS 1 COATING. THEY MAY BE USED FOR UP TO AND INCLUDING 4'-0"x 4'-0" GRID SPACING ALONG AND ATTACHED TO MAIN RUNNERS. SPLICES ARE NOT PERMITTED IN ANY HANGER WIRE.

c. MAIN RUNNERS AND CROSS RUNNERS ALONG WITH THEIR SPLICES, INTERSECTION CONNECTORS, AND EXPANSION DEVICES SHALL BE DESIGNED AND CONSTRUCTED TO CARRY A MEAN ULTIMATE TEST LOAD OF NOT LESS THAN 180 LBS. IN COMPRESSION & TENSION, IN ACCORDANCE WITH ASTM 580 SECTION 5.1.2.

11. SUSPENSION SYSTEM INSTALLATION, SHALL COMPLY WITH ASTM C636 AND E580 SECTION 5.2:

a. PROVIDE #12 GAGE HANGER WIRES AT THE ENDS OF ALL MAIN AND CROSS RUNNERS WITHIN EIGHT (8) INCHES OF THE SUPPORT OR WITHIN ONE-FOURTH (1/4) OF THE LENGTH OF THE END TEE, WHICHEVER IS LESS, FOR THE PERIMETER OF THE CEILING AREA. PERIMETER WIRES ARE NOT REQUIRED WHEN THE LENGTH OF THE END TEE IS EIGHT (8) INCHES OR LESS.

b. CEILING GRID MEMBERS SHALL BE ATTACHED TO TWO (2) ADJACENT WALLS, IN ACCORDANCE WITH ASTM E580 SECTION 5.2.3. CEILING GRID MEMBERS SHALL BE AT LEAST 3/4" INCH CLEAR OF OTHER WALLS. IF WALLS RUN DIAGONAL TO THE CEILING GRID SYSTEM RUNNERS, ONE END OF MAIN AND CROSS RUNNERS SHOULD BE FREE, AND A MINIMUM OF 3/4 INCH CLEAR OF WALL.

c. THE WIDTH OF THE PERIMETER SUPPORTING CLOSURE ANGLE SHALL BE NOT LESS THAN TWO (2) INCHES. USE OF ANGLES WITH SMALLER WIDTHS IN CONJUNCTION WITH PERIMETER CLIPS SHALL REQUIRE AN ALTERNATE METHOD OF COMPLIANCE WITH ADEQUATE JUSTIFICATION AND ARE OUTSIDE THE SCOPE OF THIS OPD.

d. AT THE PERIMETER OF THE CEILING AREA WHERE MAIN OR CROSS RUNNERS ARE NOT CONNECTED TO THE ADJACENT WALL, PROVIDE INTERCONNECTION BETWEEN THE RUNNERS AT THE FREE END TO PREVENT LATERAL SPREADING. A METAL STRUT OR A #16 GAGE WIRE WITH A POSITIVE MECHANICAL CONNECTION TO RUNNER MAY BE USED. WHERE THE PERPENDICULAR DISTANCE FROM THE WALL TO THE FIRST PARALLEL RUNNER IS EIGHT (8) INCHES OR LESS, THIS INTERCONNECTION IS NOT REQUIRED.

DRAFT

Section Title : OSHPD STANDARD SUSPENDED CEILING DETAILS	OPD No:
Sheet Title : GENERAL NOTES - PAGE 2 OF 4	CL0.01

Lamb Oxford Comments - Nov. 22. 2013

12. EXPANSION JOINTS, SEISMIC SEPARATIONS, AND PENETRATIONS:

a. EXPANSION JOINTS SHALL BE PROVIDED IN THE CEILING AT INTERSECTIONS OF CORRIDORS AND AT JUNCTIONS OF CORRIDORS WITH LOBBIES OR OTHER SIMILAR AREAS.

b. FOR CEILING AREAS EXCEEDING 2500 SQUARE FEET, A SEISMIC S DIVIDE THE CEILING INTO AREAS NOT EXCEEDING 2500 SQ. FT.

RC2: Exp. Joint vs. Slip Joint: Is this the correct terminology of expansion joints? Is this a slip joint at 90 degree intersections and at the free side?

c. PENETRATIONS THROUGH THE CEILING FOR SPRINKLER HEADS A INTEGRALLY TIED TO THE CEILING SYSTEM IN THE LATERAL DIRECTION SHALL HAVE A TWO (2) INCH OVERSIZED RING, SLEEVE OR ADAPTER THROUGH THE CEILING TILE TO ALLOW FREE MOVEMENT OF ONE (1) INCH IN ALL HORIZONTAL DIRECTIONS. A FLEXIBLE SPRINKLER HOSE FITTING THAT CAN ACCOMMODATE ONE (1) INCH OF CEILING MOVEMENT SHALL BE PERMITTED TO BE USED IN LIEU OF THE OVERSIZED RING, SLEEVE OR ADAPTER. SUCH FLEXIBLE SPRINKLER HOSE SHALL BE ADEQUATELY SUPPORTED FROM SOFFIT SO AS NOT TO EXCEED THE MAXIMUM TRIBUTARY WEIGHT OF THE CEILING.

13. LATERAL FORCE BRACING:
LATERAL FORCE BRACING IS REQUIRED IN ACCORDANCE WITH T

RC3 - 13.c: Per meeting on Thu, 11.14.2013, the range should be 0 to 45 degrees. Also per ASTM 580 Section 5.2.8.2 states that horizontal restraints to be installed. . . at an angle not exceeding 45 degrees; hence, 0 to 45 degrees.

EXCEPTION: LATERAL FORCE BRACING MAY BE OMITTED FOR SU CEILING AREA OF 144 SQ. FT. OR LESS, WHEN PERIMETER SUPPO PROVIDED AND PERIMETER WALLS ARE DESIGNED TO CARRY TH

a. PROVIDE LATERAL-FORCE BRACING ASSEMBLIES CONSISTING OF A COMPRESSION STRUT AND FOUR (4) #12 GAGE BRACING WIRES ORIENTED 90 DEGREES FROM EACH OTHER.

b. LATERAL-FORCE BRACING ASSEMBLIES SHALL BE SPACED IN ACCORDANCE WITH CL2.20 THROUGH CL2.22 AND CL2.30 FROM EACH WALL AND AT THE EDGES OF ANY CHANGE OF ELEVATION OF THE CEILING.

c. THE SLOPE OF BRACING WIRES MAY BE FROM 10 TO 45 DEGREES BUT MAY NOT EXCEED 45 DEGREES FROM THE PLANE OF THE CEILING AND WIRES SHALL BE TAUT.

d. COMPRESSION STRUTS SHALL BE ADEQUATE TO RESIST THE VERTICAL COMPONENT INDUCED BY THE BRACING WIRES, AND SHALL NOT BE MORE THAN 1 (HORIZONTAL) IN 6 (VERTICAL) OUT OF PLUMB.

14. ATTACHMENT OF HANGER AND BRACING WIRES:

a. FASTEN #12 HANGER WIRES WITH NOT LESS THAN THREE (3) TIGHT TURN IN 3 INCHES. HANGER WIRE LOOPS SHALL BE TIGHTLY WRAPPED AND SHARPLY BENT TO PREVENT ANY VERTICAL MOVEMENT OR ROTATION OF THE MEMBER WITHIN THE LOOPS.

b. FASTEN #12 BRACING WIRES WITH FOUR (4) TIGHT TURNS. MAKE ALL TIGHT TURNS WITHIN A DISTANCE OF 1 1/2" INCHES.

c. HANGER OR BRACING WIRE ANCHORED TO THE STRUCTURE SHOULD BE INSTALLED IN SUCH A MANNER THAT THE DIRECTION OF THE ANCHOR ALIGNS AS CLOSELY AS POSSIBLE WITH THE DIRECTION OF THE WIRE.

d. SEPARATE ALL CEILING HANGER AND BRACING WIRES AT LEAST SIX (6) INCHES FROM ALL UNBRACED DUCTS, PIPES CONDUITS, ET

e. HANGER WIRES SHALL NOT BE ATTACHED TO OR BEND AROUND INTERFERING MATERIAL OR EQUIPMENT. PROVIDE TRAPEZE OR OTHER SUPPLEMETARY SUPPORT MEMBERS AT OBSTRUCTIONS TO TYPICAL HANGER SPACING. PROVIDE ADDITIONAL HANGERS, STRUTS OR BRACES AS REQUIRED AT ALL CEILING BREAKS, SOFFITS, OR DISCONTINUOUS AREAS.

RC4: 14.f: Per C636 2.1.4, Unless counter spays are used.

f. HANGER WIRES THAT ARE MORE THAN 1 (HORIZONTAL) IN 6 (VERTICAL) OUT OF PLUMB SHALL REQUIRE PROJECT SPECIFIC DESIGN.

g. WHEN DRILLED-IN CONCRETE ANCHORS OR PAF ARE USED IN REINFORCED CONCRETE FOR HANGER WIRES, 1 OUT OF 10 WIRE/ ANCHOR ASSEMBLIES SHALL BE FIELD TESTED FOR 200 LBS. IN TENSION. WHEN DRILLED-IN CONCRETE ANCHORS ARE USED FOR BRACING WIRES, 1 OUT OF 2 WIRE/ANCHOR ASSEMBLIES SHALL BE FIELD TESTED FOR 440 LBS. IN TENSION IN THE DIRECTION OF THE WIRE. PAF IN CONCRETE ARE NOT PERMITTED FOR BRACING WIRES.

RC5 - 14.d: This is not practical. Code does not require this 6" spacing. ASTM E580 Section 5.2.8.3 states that Lateral force bracing members shall be spaced a mim. of 6" from all horizontal piping or duct work that is not provided with bracing restraints for horizontal forces. Bracing wire shall be attached to the grid and to the structure in such a manner that they can support a load of not less than 250 lb.

S

Sheet Title : GENERAL NOTES - PAGE 3 OF 4

RC5a - 14d: To continue, the 6" clearance if required if the ajacent system does not have bracing restraints. If a system has bracing restraints, then the 6" clearance is not required. Also, ASTM E580 5.2.8.3 does address "bracing members" and "bracing wires" differently.

DRAFT

RC6 - 15.d: Fixtures should be able to attached to cross tees via approved methods (not only main runners) due to flexibility of layout. If required, documentation from the SEOR can be submitted to justify the interruption of mains and proper load transfer.

15. **CEILING FIXTURES, TERMINALS, AND DEVICES:**

a. CEILING PANELS SHALL NOT SUPPORT ANY LIG (REFERRED TO ALL BY COMMON TERM FIXTURES HERE AFTER).

b. ALL FIXTURES, SHALL BE MOUNTED IN A MANNER THAT WILL NOT COMPROMISE CEILING PERFORMANCE.

c. ALL FIXTURES SHALL BE ATTACHED TO THE SUSPENDED CEILING SYSTEM BY MECHANICAL MEANS, UNLESS INDEPENDENTLY SUPPORTED. THE ATTACHMENT DEVICE SHALL HAVE THE CAPACITY OF 100% OF FIXURE WEIGHT ACTING IN ANY DIRECTION. A MINIMUM OF TWO ATTACHMENT DEVICES ARE REQUIRED FOR EACH FIXTURE.

d. SURFACE MOUNTED FIXTURES SHALL BE ATTACHED TO THE MIAN RUNNER WITH POSITIVE CLAMPING DEVICES MADE OF MATERIAL WITH A MINIMUM 14 GAGE. A NO.12 GAUGE SAFETY WIRES SHALL BE ATTACHED BETWEEN THE CLAMPING DEVICE AND TO THE STRUCTURE ABOVE. IN NO CASE SHALL THE FIXTURES EXCEED THE DESIGN CAPACITY OF THE SUPPORTING MEMBERS.

e. ALL FIXURES WEIGHING LESS THAN OR EQUAL TO 10 LB. SHALL HAVE ONE NO. 12 GAUGE SAFETY WIRE CONNECTED FROM FIXURE HOUSING TO STRUCTURE ABOVE. IT IS NOT NECESSARY FOR THESE SAFETY WIRES TO BE TAUT.

f. ALL FIXTURES WEIGHING GREATER THAN 10 LB BUT LESS THAN 56 LB. SHALL HAVE TWO NO. 12 GAUGE SAFETY WIRE CONNECTED FROM FIXURE HOUSING TO STRUCTURE ABOVE. IT IS NOT NECESSARY FOR THESE SAFETY WIRES TO BE TAUT.

g. ALL FIXURES WEIGHING GREATER THAN 56 LB. SHALL BE SUPPORTED DIRECTLY FROM STRUCTURE ABOVE BY APPROVED HANGERS.

h. PENDENT-HUNG FIXTURES SHALL BE SUPPORTED DIRECTLY FROM THE STRUCTURE ABOVE USING NO LESS THAN N0. 9-GAUGE WIRE OR AN APPROVED ALTERNATE SUPPORT. THE CEILING SUSPENSION SYSTEM SHALL NOT PROVIDE ANY DIRECT SUPPORT.

i. ALL RECESSED OR DROP-IN FIXURES SHALL BE SUPPORTED DIRECTLY FROM FIXTURE HOUSING TO THE STRUCTURE ABOVE WITH A MINIMUM OF TWO NO. 12 GAUGE WIRES LOCATED AT DIAGONALLY OPPOSITE CORNERS. LEVELLING OR POSITIONING OF FIXURES MAY BE PROVIDED BY CEILING GRID. FIXTURE SUPPORT WIRES MAY BE SLIGHTLY LOOSE TO ALLOW THE FIXTURE TO SEAT IN THE GRID SYSTEM. FIXTURES SHALL NOT BE SUPPORTED FROM MAIN RUNNERS OR CROSS RUNNERS IF THE WEIGHT OF THE FIXURES CAUSES TOTAL DEAD LOAD TO EXCEED THE DEFLECTION CAPABILITY OF THE CEILING SUSPENSION SYSTEM.

16. **ADDITIONAL REQUIREMENTS:**

a. CEILINGS THAT ARE PART OF A FIRE RATED ASSEMBLY: PROVIDE A DETAIL AND DESIGN NUMBER FOR RATED CEILING ASSEMBLIES FROM AN APPROVED TESTING AGENCY. THE COMPONENTS AND INSTALLATION DETAILS CONFORM IN EVERY RESPECT WITH THE LISTED DETAIL AND NUMBER. DETAILS SHALL CLEARLY DEPICT ALL COMPONENTS, INCLUDING INSULATION MATERIALS, FRAMING AND ATTACHMENT OF THE DESIGN SO THAT THE ASSEMBLY CAN BE CONSTRUCTED AND INSPECTED ACCORDINGLY. POP RIVETS, SCREWS, OR OTHER ATTACHMENTS ARE NOT ACCEPTABLE UNLESS SPECIFICALLY DETAILED ON THE DRAWINGS AND APPROVED BY APPROVED TESTING AGENCY.

b. METAL AND OTHER PANELS: METAL PANELS AND PANELS WEIGHING MORE THAN 1/2 PSF, OTHER THAN MINERAL FIBER ACOUSTICAL TILE, ARE TO BE POSITIVELY ATTACHED TO THE CEILING SUSPENSION RUNNERS.

c. BUILDING EXIT WAYS: CEILINGS IN EXIT WAYS SHALL BE INSTALLED IN ACCORDANCE WITH SECTION 13.5.6.2.2(1) OF ASCE 7-10 AS AMENDED BY 2013 CBC SECTION 1616A.1.20. SPLICES OR INTERSECTION OF RUNNERS SHALL BE ATTACHED WITH THROUGH CONNECTORS SUCH AS POP RIVETS, SCREWS, PINS, PLATES WITH END TABS OR OTHER APPROVED CONNECTORS.

DRAFT

Section Title : OSHPD STANDARD SUSPENDED CEILING DETAILS	OPD No:
Sheet Title : GENERAL NOTES - PAGE 4 OF 4	CL0.03

Lamb Oxford Comments - Nov. 22. 2013

POWER ACTUATED FASTENER (PAF) GENERAL NOTES
(INSTALLED IN CONCRETE FILLED METAL DECK OR CONC SLAB)

1. POWER ACTUATED FASTENER (PAF), POWDER DRIVEN FASTENERS (PDF), POWER DRIVEN PINS (PDP), SHOT PINS ALL REPRESENT THE SAME FASTENER AND WILL HEREAFTER BE REFERRED TO AS POWER ACTUATED FASTENERS (PAF).
2. ALLOWABLE STRENGTHS SHALL BE COMPARED TO ALLOWABLE STRESS DESIGN (ASD) LEVEL DEMAND IN ACCORDANCE WITH THE 2013 CBC SECTION 1605A.3.1.
3. ALLOWABLE STRENGTHS ARE FOR A SINGLE FASTENER WHICH MEET REQUIREMENTS IN SECTIONS BELOW AND TABLES ON CL1.11. THE ALLOWABLE STRENGTHS ARE BASED UPON THE LEAST OF THE ALLOWABLE STRENGTHS LISTED IN THE ICC ESRS 2269 & 1799.
4. MINIMUM CONCRETE STRENGTH f'_c=2000 PSI FOR NORMAL WEIGHT CONCRETE AND f'_c =3000 PSI FOR ALL LIGHT WEIGHT CONCRETE UNLESS OTHERWISE NOTED.
5. POWER ACTUATED FASTENER INSTALLED THROUGH LOW FLUTES OF THE METAL DECK SHALL MEET THE REQUIREMENTS OF THE INSTALLATION CRITERIA AND SECTIONS BELOW.
6. MINIMUM EDGE DISTANCE OF 1 1/8" FROM THE EDGE OF METAL DECK WEB AND 4" FROM THE EDGE OF THE DECK.
7. STEEL DECK TO BE A MINIMUM OF 20GA.
8. CONCRETE FILL DEPTH ABOVE THE TOP OF METAL DECK SHALL BE A MINIMUM OF 3 1/4" LIGHT WEIGHT CONCRETE.
9. PAF SHALL NOT BE USED TO RESIST SEISMIC SHEAR FORCES EXCEPT AT INTERIOR NON-LOAD BEARING, NON-SHEAR WALL PARTITION WALLS (AS PERMITTED BY 2013 CBC SECTION 1908A.1.1) AND COMPONENTS EXEMPT FROM CONSTRUCTION DOCUMENT REVIEW BY 2013 CBC SECTION 1616A.1.18 (NOT PERMITTED TO TAKE SEISMIC SHEAR BY ICC-ES AC70 FOR ANY OTHER CONDITIONS). PAF SHALL NOT BE USED TO CARRY SEISMIC TENSION LOADS (EXCEPT FOR VERTICAL SEISMIC LOAD PRODUCED BY SELF WEIGHT OF THE COMPONENTS) OR IN CRACKED CONCRETE UNLESS APPROVED FOR SUCH LOADING BY OSHPD.
10. PAF SHALL NOT BE USED IN PRE-STRESSED CONCRETE UNLESS NON-DESTRUCTIVE TESTING METHODS ARE USED TO LOCATE STRAND AND REINFORCEMENT PRIOR TO FASTENER INSTALLATION.
11. PAF INSTALLATION SHALL NOT NICK OR DAMAGE EXISTING CONCRETE REINFORCEMENT. SHOULD THIS OCCUR THE RDP IN RESPONSIBLE CHARGE SHALL BE NOTIFIED IMMEDIATELY. PAF SHALL BE INSTALLED 1" CLEAR OF EXISTING REINFORCEMENT. THIS MAY REQUIRE NON-DESTRUCTIVE TESTING.
12. PAF SHALL BE INSTALLED PER CURRENT ICC-ES EVALUATION REPORTS (OR REPORTS FROM OTHER TESTING AGENCIES ACCEPTABLE TO OSHPD).
13. TESTING OF PAF SHALL BE IN ACCORDANCE WITH 2013 CBC SECTION 1913A.7. MINIMUM CONCRETE SUBSTRATE THICKNESS SHALL BE THREE TIMES THE PAF PENETRATION INTO THE CONCRETE SUBSTRATE.
14. TESTING IS NOT REQUIRED OF PAF USED TO ATTACH TRACKS OF INTERIOR NON-SHEAR WALL PARTITIONS FOR SHEAR ONLY WHERE THERE ARE AT LEAST THREE FASTENERS.
15. TOTAL ALLOWABLE LOADS IN TENSION, SHEAR OR TENSION SHEAR COMBINATIONS SHALL NOT EXCEED 90 LBS AS PERMITTED BY EXCEPTION TO ASCE 7-10 SECTION 13.4.5.
16. REFER TO NOTE 6d ON CL0.00 FOR ADDITIONAL PAF REQUIREMENTS.

DRAFT

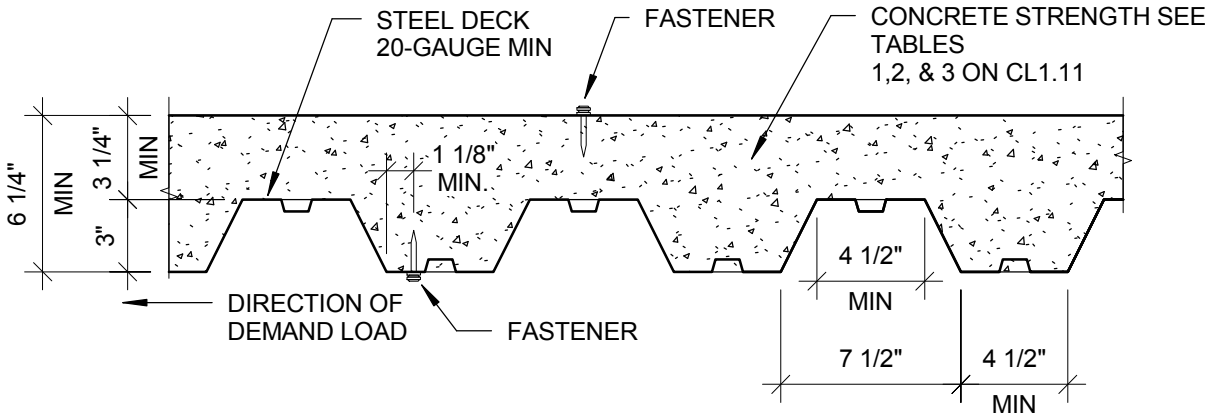

SECTION - COMPOSITE DECK

Section Title : OSHPD STANDARD SUSPENDED CEILING DETAILS		OPD No:
Sheet Title : POWER ACTUATED FASTENER (PAF) IN CONCRETE FILLED METAL DECK OR CONCRETE SLAB - PAGE 1 OF 2		CL1.10

POWER ACTUATED FASTENER (PAF) ALLOWABLE STRENGTHS
(INSTALLED IN CONCRETE FILLED METAL DECK OR CONC SLAB

TABLE 1
POWER ACTUATED FASTENER INSTALLED IN SAND-LIGHTWEIGHT CONCRETE THROUGH METAL DECK
(f'_c MIN=3000 PSI)

NOMINAL SHANK DIAMETER (IN)	MIN EMBED (IN)	MIN SPACING (IN)	MIN EDGE DISTANCE (IN)	TENSION (LB) (SEE NOTE 15)	TENSION (LB) (SEE NOTE 15)
0.145 MIN	1 1/4	4	4	90	90

TABLE 2
EXPANSION ANCHORS INSTALLED IN TO THE TOP OF STRUCTURAL SAND-LIGHTWEIGHT CONCRETE
(f'_c MIN=3000 PSI)

NOMINAL SHANK DIAMETER (IN)	MIN EMBED (IN)	MIN SPACING (IN)	MIN EDGE DISTANCE (IN)	TENSION (LB) (SEE NOTE 15)	TENSION (LB) (SEE NOTE 15)
0.145 MIN	1 1/4	4	4	90	90

TABLE 3
POWER ACTUATED FASTENER INSTALLED INTO NORMAL-WEIGHT CONCRETE
(f'_c MIN=2000 PSI)

NOMINAL SHANK DIAMETER (IN)	MIN EMBED (IN)	MIN SPACING (IN)	MIN EDGE DISTANCE (IN)	TENSION (LB) (SEE NOTE 15)	TENSION (LB) (SEE NOTE 15)
0.145 MIN	1 1/4	5.1	4	90	90

DRAFT

Section Title : OSHPD STANDARD SUSPENDED CEILING DETAILS

OPD No:

Sheet Title : POWER ACTUATED FASTENER (PAF) IN CONCRETE FILLED METAL DECK OR CONCRETE SLAB - PAGE 2 OF 2

CL1.11

POWER ACTUATED FASTENER (PAF) GENERAL NOTES (INSTALLED IN STEEL)

1. MINIMUM STEEL TENSILE STRENGTH F_u=58KSI
2. MINIMUM SPACING 1 INCH.
3. MINIMUM EDGE DISTANCE 1/2 INCH.
4. USE KNURLED SHANK.
5. POWER ACTUATED FASTENERS (PAF) SHALL BE INSTALLED PER CURRENT ICC-ES EVALUATION EVALUATION REPORTS OR REPORTS FROM OTHER TESTING AGENCIES ACCEPTABLE TO OSHPD.
6. SEE GENERAL NOTE 6d & 6e ON CL0.00 FOR PAF REQUIREMENTS & ATTACHMENT TO STEEL.
7. POWER ACTUATED FASTENER (PAF), POWEDER DRIVEN FASTENERS (PDF), POWER DRIVEN PINS (PDP), SHOT PINS, ARE COMMON NOMINCLATURES THAT ALL REPRESENT THE SAME FASTENER DESCRIBED HERE IN.
8. ALLOWABLE STRENGTHS SHALL BE COMPARED TO ALLOWABLE STRESS DESIGN (ASD) LEVEL DEMAND IN ACCORDANCE WITH THE 2013 CBC SECTION 1605A.3.1.
9. ALLOWABLE STRENGTHS ARE FOR SINGLE FASTENERS, WHICH MEET THE REQUIREMENTS PER NOTES ABOVE. THE ALLOWABLE STRENGTHS ARE BASED UPON THE LEAST OF THE ALLOWABLE STRENGTHS LISTED IN THE ESRS 2269, 1799 & 2138.
10. TOTAL ALLOWABLE TENSION, SHEAR OR TENSION SHEAR COMBINATION SHALL NOT EXCEED 250 LBS. AS PERMITTED BY THE EXCEPTION TO ASCE 7-10 SECTION 13.4.5.

DRAFT

NOMINAL SHANK DIAMETER (IN)	STEEL THICKNESS (IN)							
	3/16		1/4		3/8		1/2	
	TENSION (LB)	SHEAR (LB)	TENSION (LB)	SHEAR (LB)	TENSION (LB)	SHEAR (LB)	TENSION (LB)	SHEAR (LB)
0.145 MIN	155	250	230	250	250	250	190	220

Section Title : OSHPD STANDARD SUSPENDED CEILING DETAILS	OPD No:
Sheet Title : POWER ACTUATED FASTENER (PAF) IN STEEL	CL1.12

Lamb Oxford Comments - Nov. 22. 2013

EXPANSION ANCHOR GENERAL NOTES

1. ALLOWABLE STRENGTHS SHALL BE COMPARED TO ALLOWABLE STRESS DESIGN (ASD) LEVEL DEMAND IN ACCORDANCE WITH THE 2013 CBC SECTION 1605A.3.1.
2. ALLOWABLE STRENGTHS ARE FOR SINGLE ANCHORS WHICH MEET MIN. REQUIREMENTS IN ACCORDANCE WITH THE TABLE & SECTION BELOW.
3. MINIMUM CONCRETE STRENGTH f'c=3000 PSI.
4. EXPANSION ANCHORS INSTALLED THROUGH UPPER OR LOWER FLUTES OF METAL DECK SHALL MEET THE REQUIREMENTS OF THE INSTALLATION CRITERIA AND SECTION BELOW.
5. STEEL DECK TO BE MIN. 20 GA. W-DECK.
6. MINIMUM CONCRETE FILL DEPTH ABOVE THE TOP OF METAL DECK IN ACCORDANCE WITH THE SECTION AND INSTALLATION CRITERIA BELOW.
7. EXPANSION ANCHORS SHALL NOT BE USED IN PRE-STRESSED CONCRETE UNLESS NON-DESTRUCTIVE TESTING METHODS ARE USED TO LOCATE STRAND & REINFORCING PRIOR TO ANCHOR INSTALLATION.
8. EXPANSION ANCHOR INSTALLATION SHALL NOT NICK OR DAMAGE EXISTING REINFORCEMENT. SHOULD THIS OCCUR THE RDP IN RESPONSIBLE CHARGE SHALL BE NOTIFIED IMMEDIATELY. EXPANSION ANCHORS SHALL BE INSTALLED 1" CLEAR OF EXISTING REINFORCEMENT.
9. EXPANSION ANCHORS SHALL BE INSTALLED PER CURRENT ICC-ES EVALUATION REPORT OR REPORT FROM OTHER TESTING AGENCY ACCEPTABLE TO OSHPD.
10. TESTING OF EXPANSION ANCHORS SHALL BE IN ACCORDANCE WITH 2013 CBC SECTION 1913A.7.
11. EXPANSION ANCHORS SHALL BE INSTALLED TO COMPLY WITH THE MINIMUM SLAB THICKNESS REQUIREMENTS ESTABLISHED BY THE ICC-ESR FOR THE SPECIFIED ANCHOR.
12. REFER TO NOTE 6c ON CL0.00 FOR ADDITIONAL EXPANSION ANCHOR REQUIREMENTS.
13. ALL VALUES IN TABLES ARE FOR CRACKED CONCRETE & INCLUDE REDUCTION BASED ON ACI 318-11 SECTION D.3.3.4.4 REQUIREMENTS. THE ALLOWABLE STRENGTHS ARE BASED UPON THE LEAST OF THE ALLOWABLE STRENGTHS CALCULATED USING THE ICC ESRS 1917, 2427 & 3037 AND USING AN ALLOWABLE STRENGTH CONVERSION FACCTOR OF 1.4.
14. ALL VALUES IN THE TABLE REFLECT ALLOWABLE STRENGTHS WITH 20% STRESS INCREASE FOR LOAD COMBINATIONS WITH OVERSTRENGTH FACTOR IN ACCORDANCE WITH ASCE 7-10 SECTION 12.4.3.3.

DRAFT

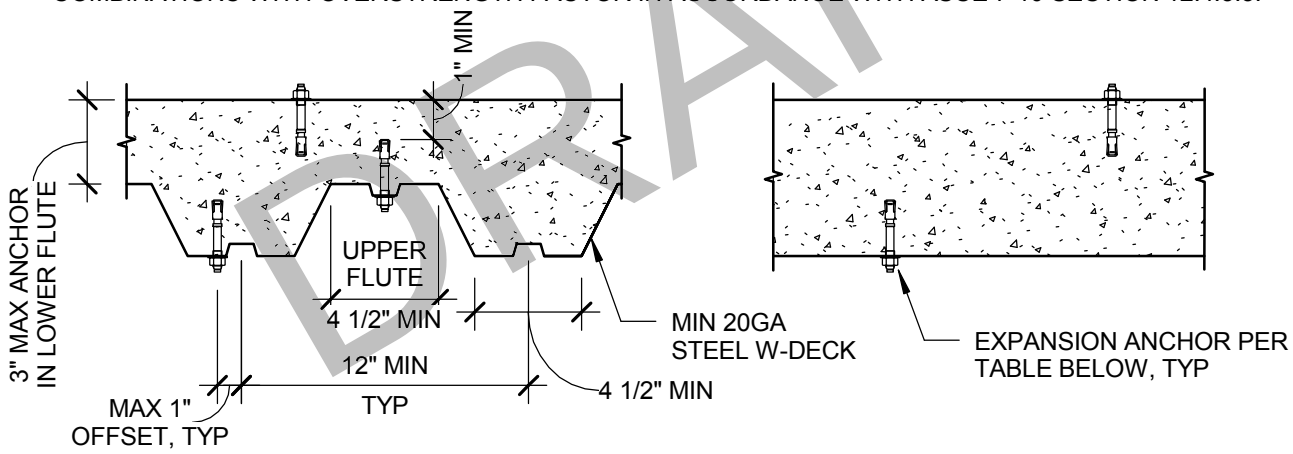

EXPANSION ANCHORS INSTALLATION CRITERIA

	NOMINAL ANCHOR DIAMETER (IN)				
	3/8	1/2		5/8	
EFFECTIVE MIN EMBEDMENT (IN)	2	2 1/4	3 1/4	3 1/8	4
MIN MEMBER THICKNESS NWC SLAB OR BEAM ONLY (IN)	4.5	4.5	6	6	7 1/4
MIN ANCHOR SPACING (3 x EMBED) (IN)	6 3/4	6 3/4	9 3/4	9 3/8	12
MIN ANCHOR SPACING (3 x EMBED) (IN)	6	7	7 1/2	6 1/2	8 3/4

Section Title : OSHPD STANDARD SUSPENDED CEILING DETAILS

OPD No:

Sheet Title : EXPANSION ANCHOR GENERAL NOTES

CL1.20

EXPANSION ANCHOR ALLOWABLE STRENGTHS

TABLE 1

EXPANSION ANCHORS INSTALLED IN TO THE UNDERSIDE OF STRUCTURAL SAND-LIGHTWEIGHT CONCRETE (f'_c MIN=3000 PSI) OVER METAL DECK

ANCHOR DIA. (IN)	EMBED (IN)	SHEAR (LB)	TENSION (LB)
3/8	2	747	610
1/2	2 1/4	1029	610
1/2	3 1/4	1173	1095
5/8	3 1/8	1353	836
5/8	4	3070	1941

TABLE 2

EXPANSION ANCHORS INSTALLED IN TO THE TOP OF STRUCTURAL SAND-LIGHTWEIGHT CONCRETE (f'_c MIN=3000 PSI) OVER METAL DECK

ANCHOR DIA. (IN)	EMBED (IN)	SHEAR (LB)	TENSION (LB)
3/8	2	948	624
1/2	2 1/4	948	660

TABLE 3

EXPANSION ANCHORS INSTALLED IN NORMAL WEIGHT CONCRETE (f'_c MIN=3000 PSI)

ANCHOR DIA. (IN)	EMBED (IN)	SHEAR (LB)	TENSION (LB)
3/8	2	1020	1039
1/2	2 1/4	1580	1101
1/2	3 1/4	3273	2250
5/8	3 1/8	3020	2150
5/8	4	4469	3113

DRAFT

Section Title : OSHPD STANDARD SUSPENDED CEILING DETAILS

OPD No:

Sheet Title : EXPANSION ANCHOR ALLOWABLE STRENGTHS

CL1.21

Lamb Oxford Comments - Nov. 22. 2013

SHEET METAL SCREW (SMS) GENERAL NOTES

1. THE ALLOWABLE STRENGTHS ARE BASED UPON THE AISI S100-07/S2-10 AND ARE LIMITED BY ACTUAL TESTED STRENGTH OF THE SCREWS IN TENSION AND SHEAR.
2. THE ALLOWABLE STRENGTHS ARE BASED UPON THE LEAST OF THE AVERAGE TESTED TENSILE AND SHEAR STRENGTHS TABULATED FROM ICC ESR'S 1976, 2196, 1730, 1408, AND THE STEEL STUD MANUFACTURER'S ASSOCIATION (SSMA). FASTENER TYPES AND SIZES APPLY TO NON-PROPRIETARY FASTENER TYPES AND SIZES, AND DOES NOT ENDORSE A SPECIFIC MANUFACTURER. WHERE PROPRIETARY FASTENERS ARE SPECIFIED, NO EXCEPTIONS ARE TAKEN TO THE USE OF MANUFACTURER SPECIFIC VALUES THAT ARE BASED UPON THE AISI S100-07/S2-10, SECTION E4. ALL SCREW FASTENERS SHALL SATISFY ICC-ES AC118-ACCEPTANCE CRITERIA FOR SELF TAPPING SCREW FASTENERS.
3. TABLE 1 REPRESENTS ALLOWABLE TENSION AND SHEAR STRENGTHS FOR NON-PROPRIETARY SHEET METAL SCREWS FOR STEEL TO STEEL CONNECTIONS.
4. TABLES 2 AND 3 REPRESENT ALLOWABLE TENSION AND SHEAR STRENGTHS THAT INCORPORATE THE EFFECTS OF EITHER ONE (1) OR TWO (2) LAYERS OF 5/8" GYPSUM BOARD BETWEEN FASTENER HEAD AND CONNECTING STEEL MATERIAL.
5. IN ORDER TO USE THE VALUES IN TABLES 1, 2, AND 3, THE ATTACHMENTS SHALL BE DETAILED IN SUCH A WAY AS TO AVOID PRYING AND THE STUDS MUST BE STABILIZED WITH FULL-DEPTH BLOCKING WITH CONTINUOUS STRAPS ALONG THE FLANGES OR WITH BACKING BARS.
6. PENETRATION OF SCREWS THROUGH JOINED MATERIAL SHOULD NOT BE LESS THAN THREE (3) EXPOSED THREADS.
7. STEEL THICKNESSES JOINED ARE ASSUMED TO BE THE SAME. IF DISSIMILAR THICKNESSES ARE BEING CONNECTED, THE VALUE FOR THE THINNER PART JOINED SHALL BE USED.
8. THE MINIMUM SPACING BETWEEN CENTERS OF FASTENERS SHALL NOT BE LESS THAN 3 X FASTENER DIAMETER. THE MINIMUM EDGE DISTANCE FROM THE CENTER OF A FASTENER TO THE EDGE OF ANY PART SHALL NOT BE LESS THAN 1.5 X FASTENER DIAMETER. WHERE THE END DISTANCE IS PARALLEL TO THE FORCE ON THE FASTENER, THE NOMINAL SHEAR STRENGTH SHALL BE LIMITED BY SECTION E4.3.2 OF THE AISI S100-07/S2-10.
9. GALVANIZED METAL STUDS, TRACK AND SHEET STEEL SHALL CONFORM TO ASTM A653-09a MATERIAL (OR OTHER EQUIVALENT ASTM LISTED MATERIALS IN THE AISI S100-07/S2-10, SECTION A2.1) WITH A MINIMUM YIELD STRENGTH OF 33 KSI FOR 43 MIL (18 GA) AND LIGHTER, AND MINIMUM YIELD STRENGTH OF 50 KSI FOR 54 MIL (16 GA) & HEAVIER.
10. WHERE VALUES ARE NOT GIVEN, SUCH COMBINATIONS OF SCREW SIZES & MATERIAL THICKNESS ARE NOT RECOMMENDED.
11. IF THE ATTACHMENT DETAILS RESULT IN PRYING WITH A MOMENT ARM NOT TO EXCEED 1 5/8", THE VALUES IN TABLE 4 MAY BE USED. IF THE ATTACHMENT DETAILS RESULT IN PRYING WITH A MOMENT ARM THAT EXCEEDS 1 5/8", THE REREGISTERED DESIGN PROFESSIONAL IN RESPONSIBLE CHARGE OF THE PROJECT SHALL DETERMINE THE ALLOWABLE VALUES AND SUBMIT SUBSTANTIATION FOR THEM TO OSHPD FOR REVIEW.
12. INTERACTION OF SHEAR AND TENSION SHALL BE BASED ON $T/T_{ALL} + V/V_{ALL} \leq 1.0$.
13. REFER TO NOTE 6A ON CL0.00 FOR ADDITIONAL SHEET METAL SCREW REQUIREMENTS.

DRAFT

Section Title : OSHPD STANDARD SUSPENDED CEILING DETAILS			OPD No:
Sheet Title : SHEET METAL SCREW GENERAL NOTES			CL1.30

SHEET METAL SCREW (SMS ALLOWABLE STRENGTHS

TABLE 1

SHEET METAL SCREW ALLOWABLE STRENGHTS FOR STEEL TO STEEL CONNECTIONS.

FASTENER SIZE											
Fy (KSI)	MIL (STEEL GA)	NO. 14		NO. 12		NO. 10		NO. 8		NO. 6	
		0.250 IN		0.216 IN		0.190 IN		0.164 IN		0.138 IN	
		SHEAR (LB)	TENSION (LB)	SHEAR (LB)	TENSION (LB)	SHEAR (LB)	TENSION (LB)	SHEAR (LB)	TENSION (LB)	SHEAR (LB)	TENSION (LB)
50	97 (12)	704	275	525	205	-	-	-	-	-	-
	68 (14)	704	275	525	205	405	159	-	-	-	-
	54 (16)	613	261	525	205	405	159	303	118	-	-
33	43 (18)	302	144	280	124	263	109	244	94	165	79
	33 (20)	-	-	-	-	177	84	164	72	151	61

NOTES:
1. SEE GENERAL NOTES ON CL1.30 FOR ADDITIONAL INFORMATION .
2. WHERE ONE OR TWO LAYERS OF GYP BOARD OCCURS BETWEEN STEEL SURFACES, THE ALLOWABLE VALUES OF TABLE 2 & 3 SHALL BE USED.
3. ALLOWABLE STRENGTH VALUES DO NOT ACCOUNT FOR EFFECTS FROM PRYING. THE RDP IN RESPONSIBLE CHARGE OF THE PROJECT SHALL PROVIDE ADEQUATE BLOCKING/RESTRAINT TO PREVENT PRYING ACTION. WHERE PRYING OCCURS, THE VALUES AND CONSTRAINTS OF TABLE 4 SHALL BE USED.

TABLE 2 - NON-PRYING CONDITION

SHEET METAL SCREW ALLOWABLE STRENGHTS FOR STEEL TO STEEL CONNECTIONS. WITH ONE LAYER OF 5/8" GYP BOARD BETWEEN STEEL SURAFACES.

FASTENER SIZE											
Fy (KSI)	MIL (STEEL GA)	NO. 14		NO. 12		NO. 10		NO. 8		NO. 6	
		0.250 IN		0.216 IN		0.190 IN		0.164 IN		0.138 IN	
		SHEAR (LB)	TENSION (LB)	SHEAR (LB)	TENSION (LB)	SHEAR (LB)	TENSION (LB)	SHEAR (LB)	TENSION (LB)	SHEAR (LB)	TENSION (LB)
50	97 (12)	226	275	180	205	-	-	-	-	-	-
	68 (14)	226	275	180	205	140	159	-	-	-	-
	54 (16)	226	261	180	205	140	159	120	118	-	-
33	43 (18)	226	144	180	124	140	109	120	94	60	79
	33 (20)	-	-	-	-	100	84	80	72	60	61

NOTES:
1. SEE GENERAL NOTES ON CL1.30 FOR ADDITIONAL INFORMATION .
2. ALLOWABLE STRENGTH VALUES DO NOT ACCOUNT FOR EFFECTS FROM PRYING. THE RDP IN RESPONSIBLE CHARGE OF THE PROJECT SHALL PROVIDE ADEQUATE BLOCKING/RESTRAINT TO PREVENT PRYING ACTION. WHERE PRYING OCCURS, THE VALUES AND CONSTRAINTS OF TABLE 4 SHALL BE USED.

DRAFT

Section Title : OSHPD STANDARD SUSPENDED CEILING DETAILS

OPD No:

Sheet Title : SHEET METAL SCREW ALLOWABLE STRENGTHS - PAGES 1 OF 2

CL1.31

SHEET METAL SCREW (SMS) ALLOWABLE STRENGTHS (CONTINUED)

Lamb Oxford Comments - Nov. 22. 2013

TABLE 3 - NON-PRYING CONDITION

SHEET METAL SCREW ALLOWABLE STRENGTHS FOR STEEL TO STEEL CONNECTIONS WITH TWO LAYERS OF 5/8" GYP BOARD BETWEEN STEEL SURFACES.

Fv (KSI)	MIL (STEEL GA)	FASTENER SIZE									
		NO. 14		NO. 12		NO. 10		NO. 8		NO. 6	
		0.250 IN		0.216 IN		0.190 IN		0.164 IN		0.138 IN	
		SHEAR (LB)	TENSION (LB)	SHEAR (LB)	TENSION (LB)	SHEAR (LB)	TENSION (LB)	SHEAR (LB)	TENSION (LB)	SHEAR (LB)	TENSION (LB)
50	97 (12)	166	275	130	205	-	-	-	-	-	-
	68 (14)	166	275	130	205	100	159	-	-	-	-
	54 (16)	166	261	130	205	100	159	80	118	-	-
33	43 (18)	166	144	130	124	100	109	80	94	50	79
	33 (20)	-	-	-	-	70	84	50	72	40	61

NOTES:
1. SEE GENERAL NOTES ON CL1.30 FOR ADDITIONAL INFORMATION .
2. ALLOWABLE STRENGTH VALUES DO NOT ACCOUNT FOR EFFECTS FROM PRYING. THE RDP IN RESPONSIBLE CHARGE TO PROVIDE ADEQUATE BLOCKING/RESTRAINT TO PREVENT PRYING ACTION. WHERE PRYING OCCURS, THE VALUES AND CONSTRAINTS OF TABLE 4 SHALL BE USED.

TABLE 4 - PRYING CONDITION (SEE DETAILS BELOW - STRUT CAN BE HORIZONTAL OR VERTICAL)

SHEET METAL SCREW ALLOWABLE STRENGTHS FOR STEEL TO STEEL CONNECTIONS WITH ONE OR TWO LAYERS OF 5/8" GRP BOARD BETWEEN STEEL SURFACES AND MAXIMUM PRYING MOMENT ARM OF 1 5/8"

Fv (KSI)	MIL (STEEL GA)	FASTENER SIZE									
		NO. 14		NO. 12		NO. 10		NO. 8		NO. 6	
		0.250 IN		0.216 IN		0.190 IN		0.164 IN		0.138 IN	
		SHEAR (LB)	TENSION (LB)	SHEAR (LB)	TENSION (LB)	SHEAR (LB)	TENSION (LB)	SHEAR (LB)	TENSION (LB)	SHEAR (LB)	TENSION (LB)
50	97 (12)	40	275	30	205	-	-	-	-	-	-
	68 (14)	40	275	30	205	25	159	-	-	-	-
	54 (16)	40	261	30	205	25	159	20	118	-	-
33	43 (18)	40	144	30	124	25	109	20	94	10	79
	33 (20)	-	-	-	-	15	84	15	15	10	61

NOTES:
1. SEE GENERAL NOTES ON CL1.30 FOR ADDITIONAL INFORMATION.
2. ALLOWABLE STRENGTH VALUES LISTED IN TABLE 4 ARE BASED UPON A LIMITED TEST ASSEMBLY WHERE THE ORIGIN AND DIRECTION OF THE LOAD RESULTS IN PRYING UPON THE FASTENER. THE MAGNITUDE OF THIS PRYING EFFECT SHALL BE LIMITED TO A MOMENT ARM OF 1 5/8" FROM THE FASTENER.

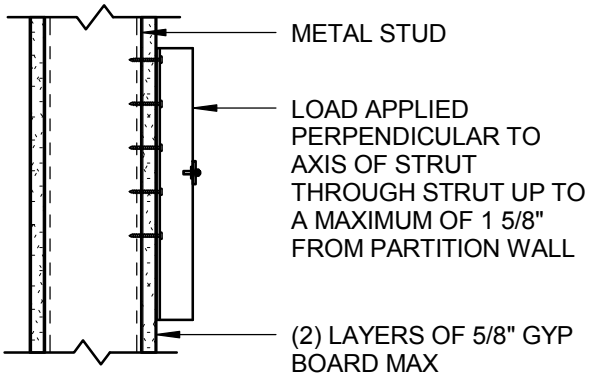

WALL ELEV WITH LOAD APPLIED THROUGH STRUT

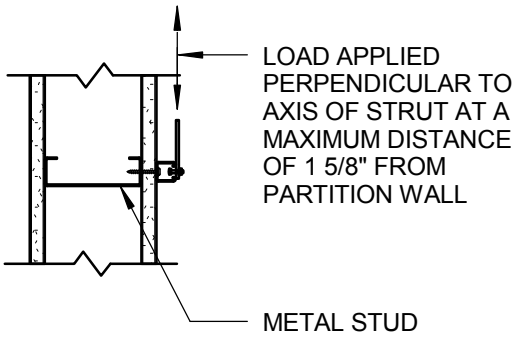

PLAN VIEW

DRAFT

Section Title : OSHPD STANDARD SUSPENDED CEILING DETAILS	OPD No:
Sheet Title : SHEET METAL SCREW ALLOWABLE STRENGTHS - PAGES 2 OF 2	CL1.32

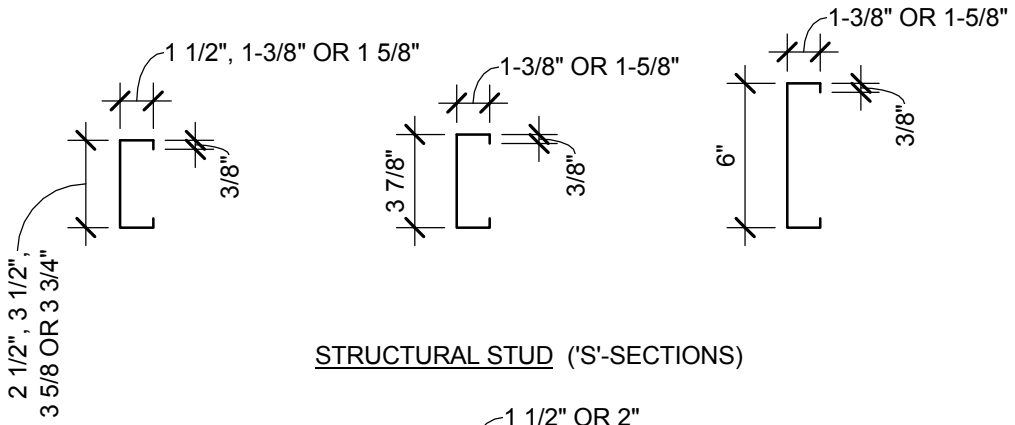

STRUCTURAL STUD ('S'-SECTIONS)

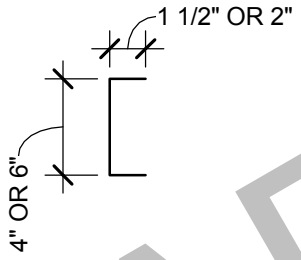

STRUCTURAL TRACK ('T'-SECTIONS)

DRAFT

DESIGNATION THICKNESS (MILS)	REFERENCE ONLY GAUGE NO.
18	25
27	22
33	20
43	18
54	16
68	14
97	12
118	10

NOTE:

1. F_y = 50KSI FOR 54 MIL (16GA) & THICKER SECTIONS, AND F_y = 33KSI FOR SECTIONS UP TO & INCLUDING 43 MI (18GA).
2. SIZE AND THICKNESS ARE CONSIDERED MINIMUMS.
3. STRUCTURAL STUDS SHALL NOT BE PUNCHED UNLESS NOTED OTHERWISE.

Section Title : OSHPD STANDARD SUSPENDED CEILING DETAILS	OPD No:
Sheet Title : METAL STUD PROFILES	CL1.40

Lamb Oxford Comments - Nov. 22. 2013

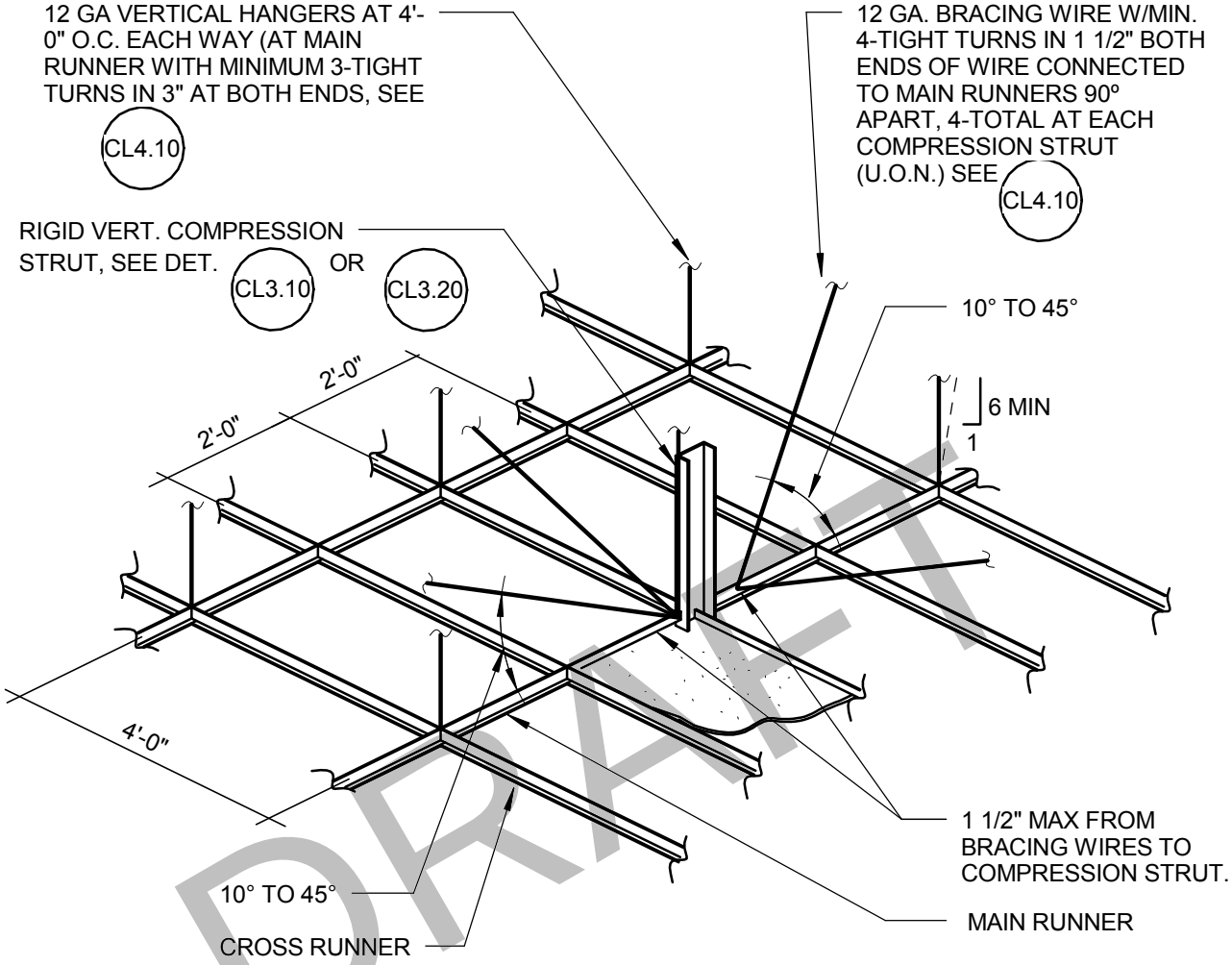

DRAFT

NOTES:

1. SEE SUSPENDED CEILING NOTES #13 & #14 ON CL0.02
2. COMPRESSION STRUTS SHALL NOT REPLACE HANGER WIRES. ATTACH COMPRESSION STRUT TO MAIN RUNNERS AT CROSS RUNNER INTERSECTION.
3. FOR CONDITIONS AT CORRIDOR SEE DRAWING NO. CL2.3

Section Title : OSHPD STANDARD SUSPENDED CEILING DETAILS	OPD No:
Sheet Title : SUSPENDED CEILING BRACING ASSEMBLY	CL2.10

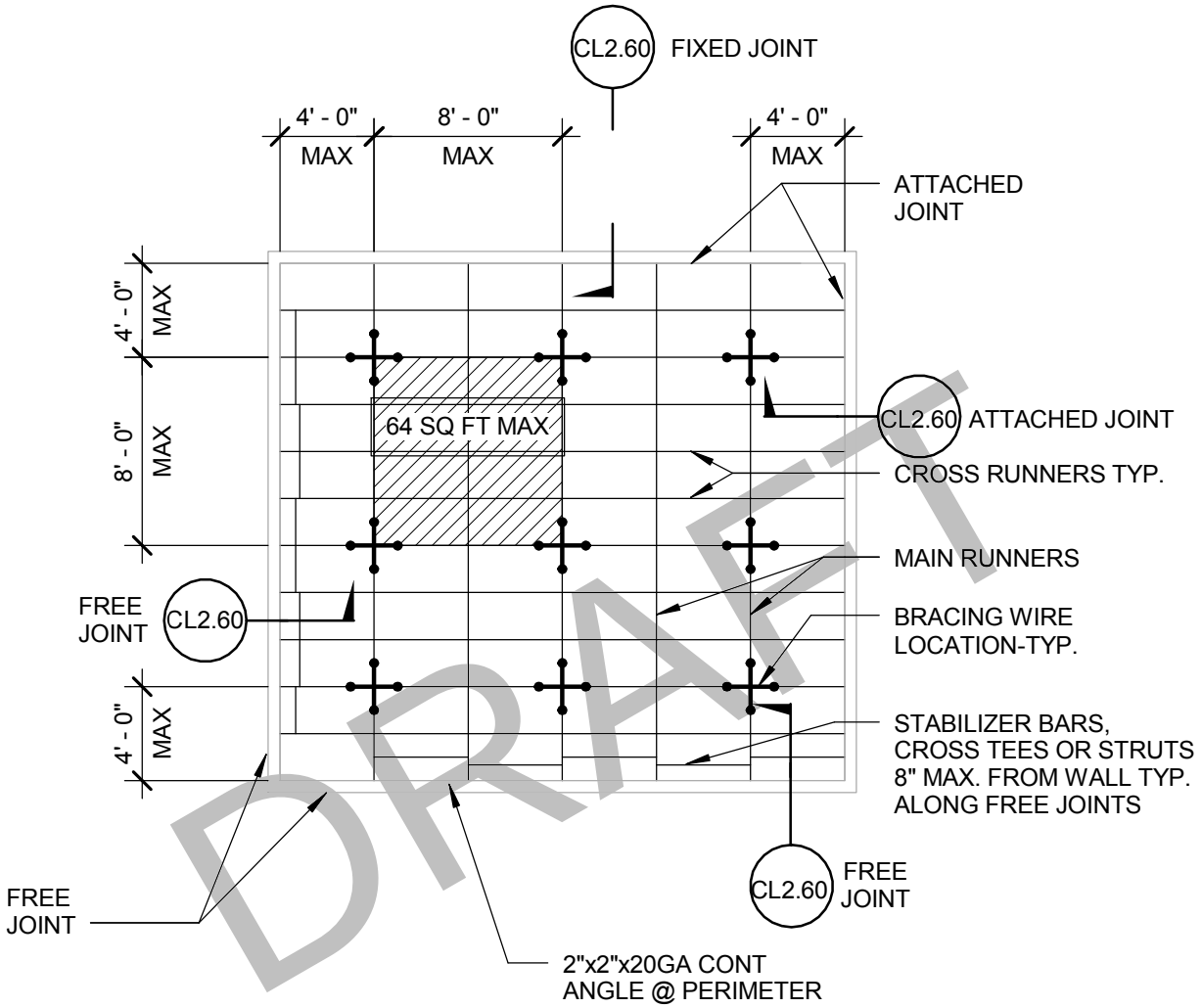

DRAFT

NOTE:

BRACING WIRES AND COMP. STRUT SHALL OCCUR
AT EVERY 64 SQ. FT. MAX. IN ROOMS OVER 64 SQ. FT.

Section Title : OSHPD STANDARD SUSPENDED CEILING DETAILS	OPD No:
Sheet Title : TYPICAL CEILING PLAN FOR $1.73 < S_{DS} \leq 2.50$ AND z/h <= 1.0	CL2.20

Lamb Oxford Comments - Nov. 22. 2013

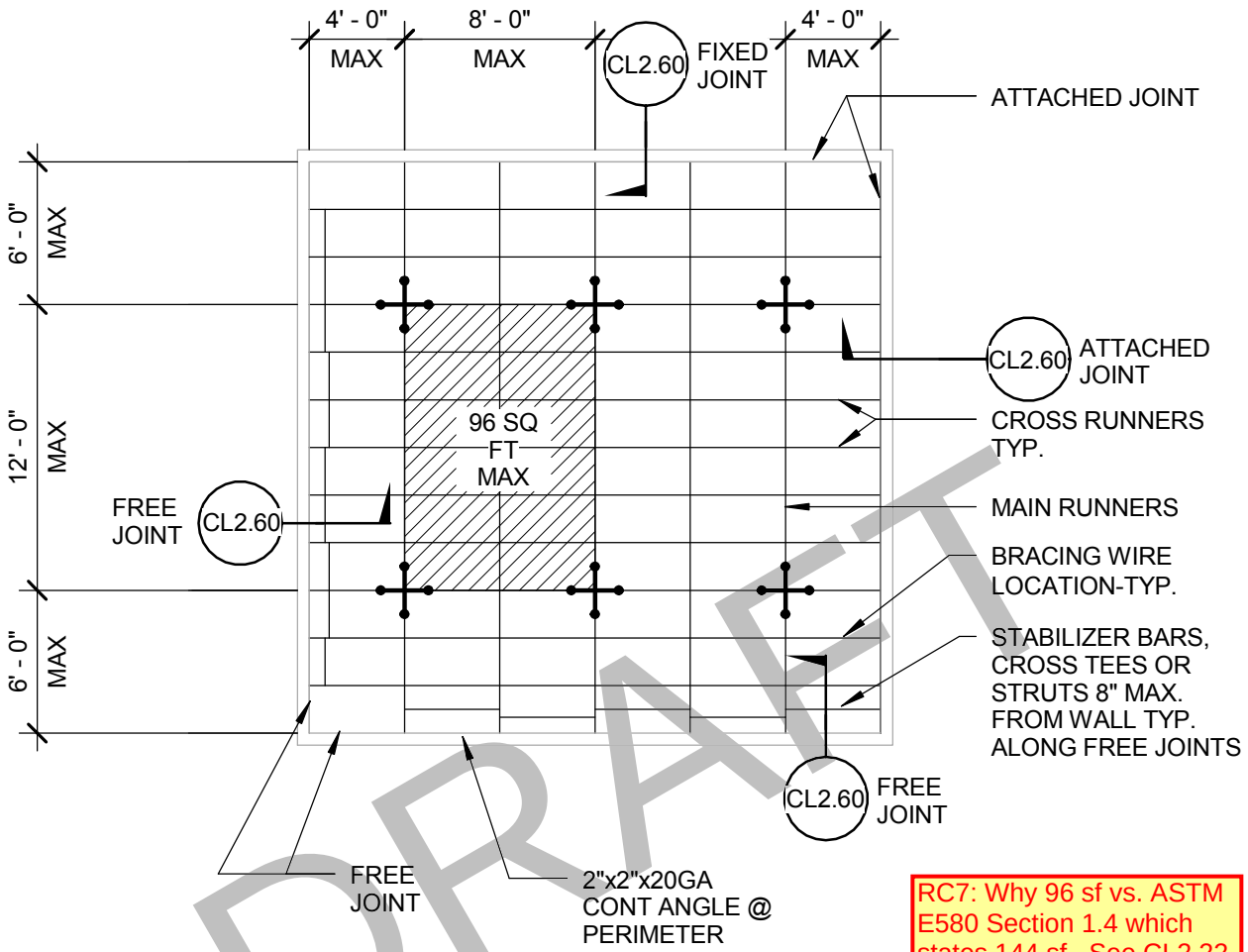

DRAFT

RC7: Why 96 sf vs. ASTM E580 Section 1.4 which states 144 sf. See CL2.22. Also, similar questions for sheet CL2.20.

NOTE:

BRACING WIRES AND COMP. STRUT SHALL OCCUR AT EVERY 96 SQ. FT. MAX. IN ROOMS OVER 96 SQ. FT.

RC8: This differes from CL2.22. Are tests available for 96sf vs 144sf?

Section Title : OSHPD STANDARD SUSPENDED CEILING DETAILS	OPD No:
Sheet Title : TYPICAL CEILING PLAN FOR $1.15 < S_{DS} \leq 1.73$ AND z/h <= 1.0	CL2.21

Lamb Oxford Comments - Nov. 22. 2013

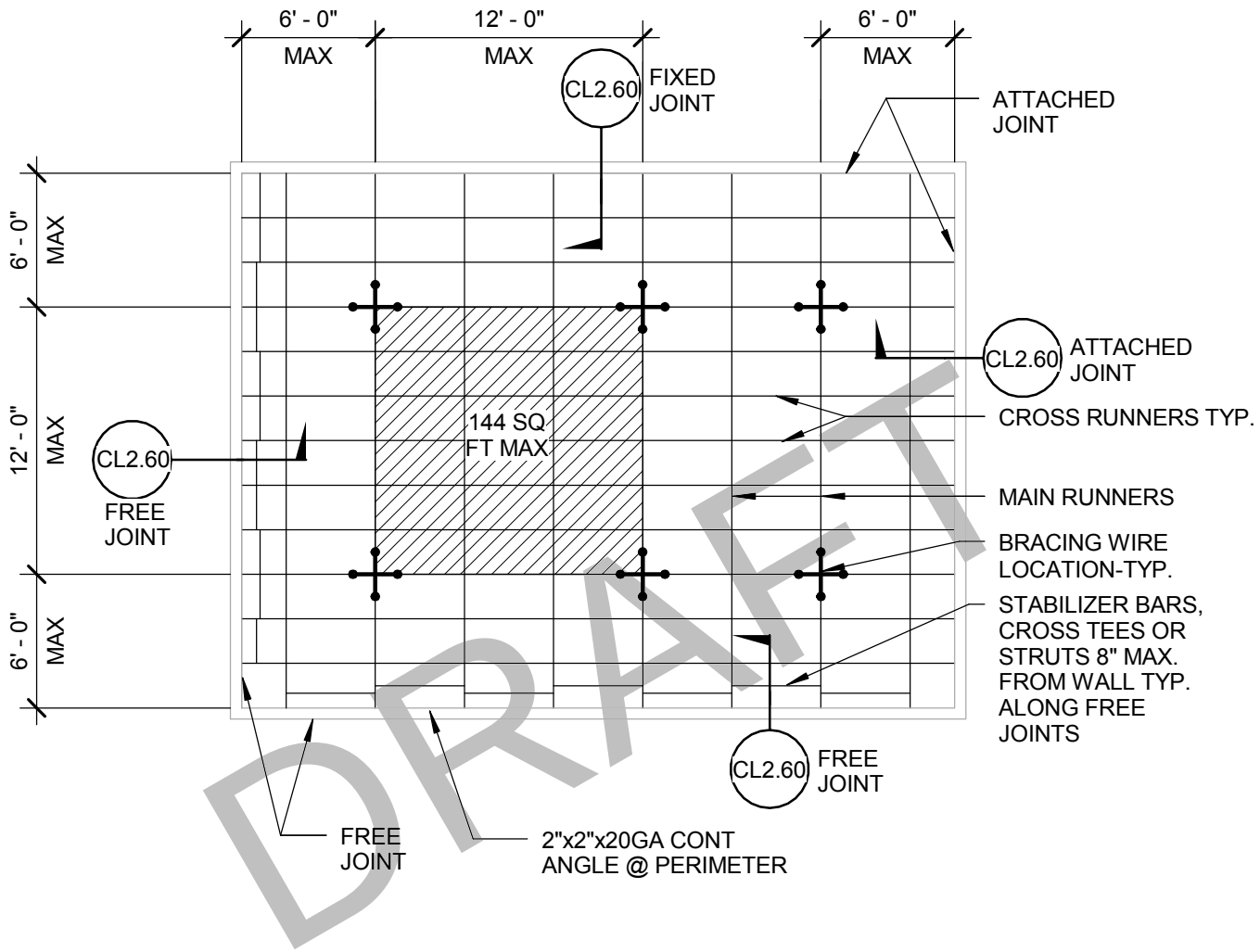

DRAFT

NOTE:

BRACING WIRES AND COMP. STRUT SHALL OCCUR
AT EVERY 144 SQ. FT. MAX. IN ROOMS OVER 144 SQ. FT.

Section Title : OSHPD STANDARD SUSPENDED CEILING DETAILS	OPD No:
Sheet Title : TYPICAL CEILING PLAN FOR $S_{DS} \leq 1.15$ AND z/h <= 1.0	CL2.22

Lamb Oxford Comments - Nov. 22. 2013

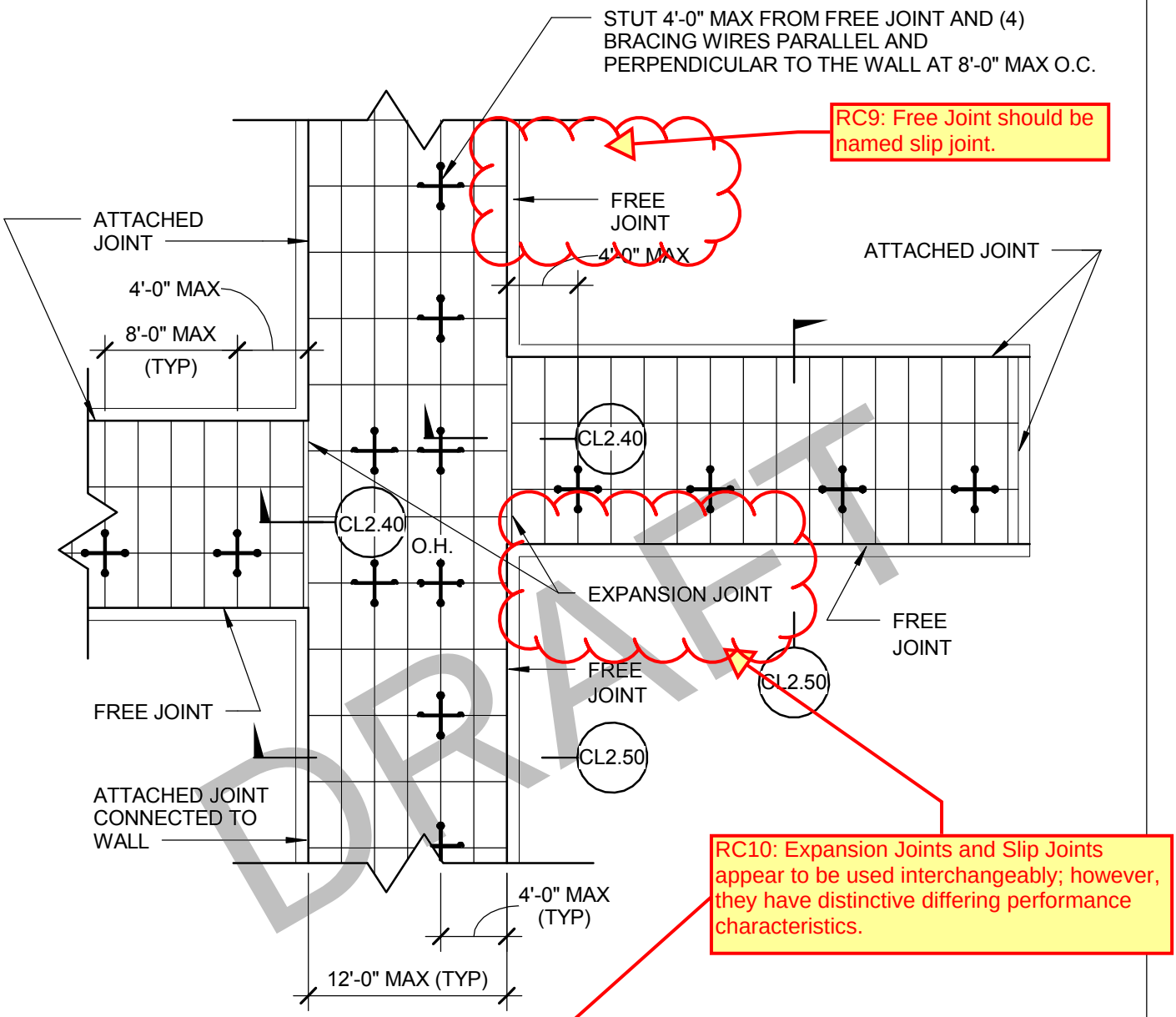

DRAFT

LOCATION OF EXPANSION/SLIP JOINTS IN CORRIDORS

Section Title : OSHPD STANDARD SUSPENDED CEILING DETAILS		OPD No:
Sheet Title : SUSPENDED ACOUSTICAL CEILING-CORRIDOR CEILING PLAN		CL2.30

Lamb Oxford Comments - Nov. 22. 2013

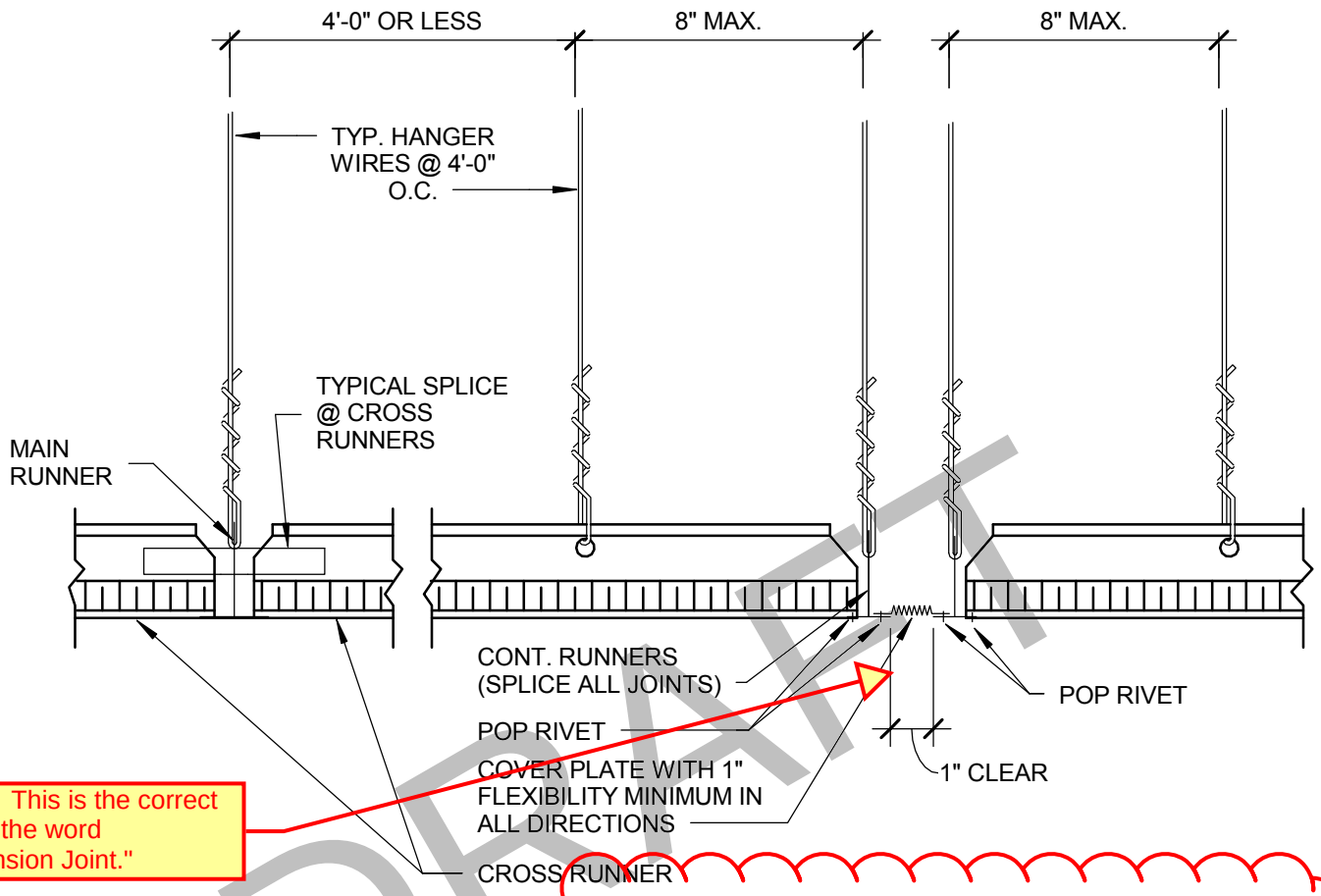

RC11: This is the correct use of the word "Expansion Joint."

DRAFT

RUNNER SPLICE EXPANSION JOINT

EXPANSION JOINT AT INTERSECTION OF CORRIDORS, JUNCTIONS OF CORRIDORS AND LOBBIES, SIMILAR AREAS AND CEILING OVER 2500 SFT

Section Title : OSHPD STANDARD SUSPENDED CEILING DETAILS		OPD No:
Sheet Title : SUSPENDED ACOUSTICAL CEILING - EXPANSION JOINT AT INTERSECTIONS		CL2.40

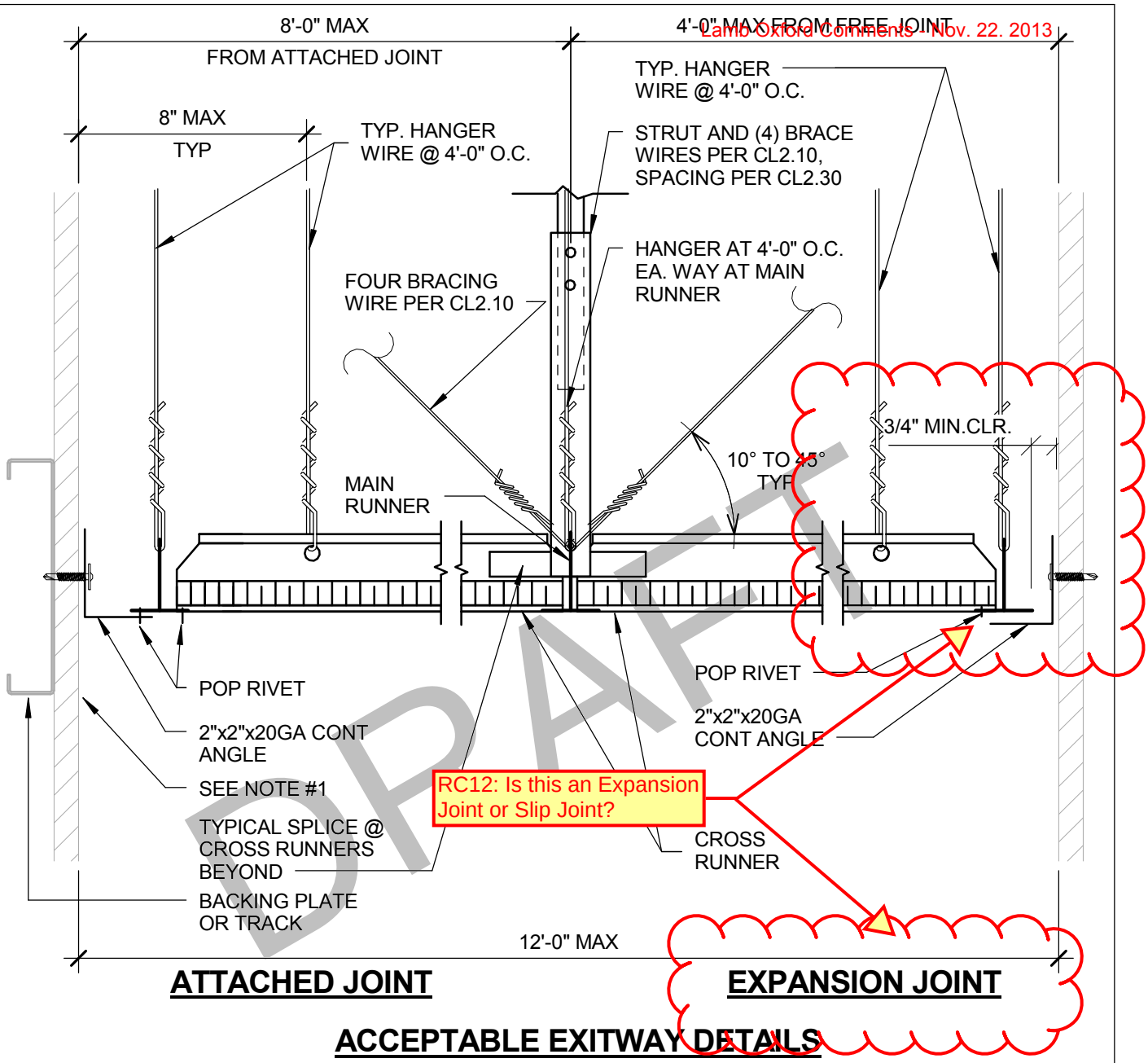

RC12: Is this an Expansion Joint or Slip Joint?

ACCEPTABLE EXITWAY DETAILS

NOTES:

1. PERIMETER WALLS SHALL BE DESIGNED TO CARRY TRIBUTARY LATERAL FORCES PER TABLE BELOW. RDP TO VERIFY. RDP TO SPECIFY CONNECTION OF BACKING TO STUDS

S_{DS}	SMS	MIN BACKING	Fp
$S_{DS} \leq 1.15$	#10 @ 2'-0" OC	6"x16GA BACKING PL	9.3 plf
$1.15 < S_{DS} \leq 1.73$	#10 @ 2'-0" OC	6"x16GA BACKING TRACK	14.0 plf
$1.73 < S_{DS} \leq 2.50$	#10 @ 2'-0" OC	6"x16GA BACKING TRACK	20.9 plf

2. SEISMIC BRACING WIRES AND COMPRESSION STRUTS IN ACCORDANCE WITH PAGES CL2.20, CL2.21, AND CL2.22 SHALL BE PERMITTED IN LIEU OF DESIGNING PERIMETER WALLS FOR SEISMIC FORCES AND BRACING SYSTEM SHOWN ON PAGE CL2.30 AND THIS PAGE.

Section Title : OSHPD STANDARD SUSPENDED CEILING DETAILS	OPD No:
Sheet Title : TYPICAL CEILING SECTION AT EXITWAY CORRIDORS	CL2.50

Lamb Oxford Comments - Nov. 22. 2013

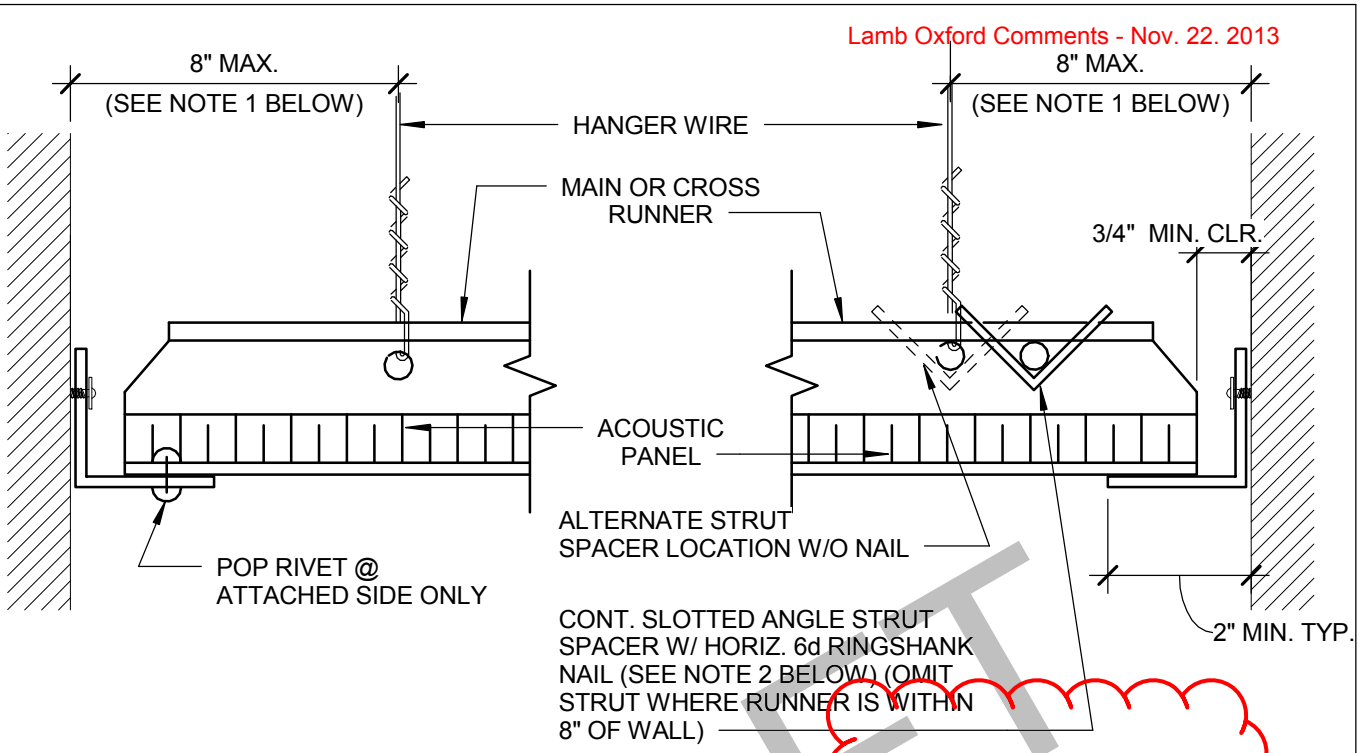

ATTACHED JOINT

FREE JOINT

DRAFT

1. PROVIDE #12 GAGE HANGER WIRES AT THE ENDS OF ALL MAIN AND CROSS RUNNERS WITHIN EIGHT (8) INCHES OF THE SUPPORT OR WITHIN ONE-FOURTH (1/4) OF THE LENGTH OF THE END TEE, WHICHEVER IS LESS, FOR THE PERIMETER OF THE CEILING AREA. PERIMETER WIRES ARE NOT REQUIRED WHEN THE LENGTH OF THE END TEE IS EIGHT (8) INCHES OR LESS.
2. NAILS AT ENDS OF HORIZONTAL STRUTS ARE TO BE PLACED WITH NAIL HEAD TOWARD CENTER LINE OF SPAN OF STRUT.
3. SPACERS MAY BE SLOTTED APPROVED ANGLES OR CHANNELS WITH "DIAMOND POINTS" OF SPRING STEEL WHICH SNAP TIGHT TO PREVENT MOVEMENT OF STRUT.

RC13: Should this be called a "Slip Joint" vs. Free Joint?

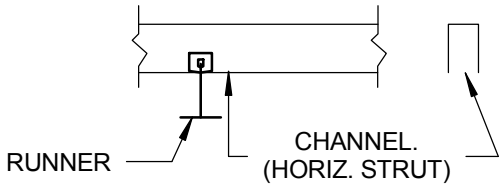

APPROVED SPACER

Section Title : OSHPD STANDARD SUSPENDED CEILING DETAILS		OPD No:
Sheet Title : CEILING PERIMETER INCLUDING NON-EXITWAY CORRIDORS		CL2.60

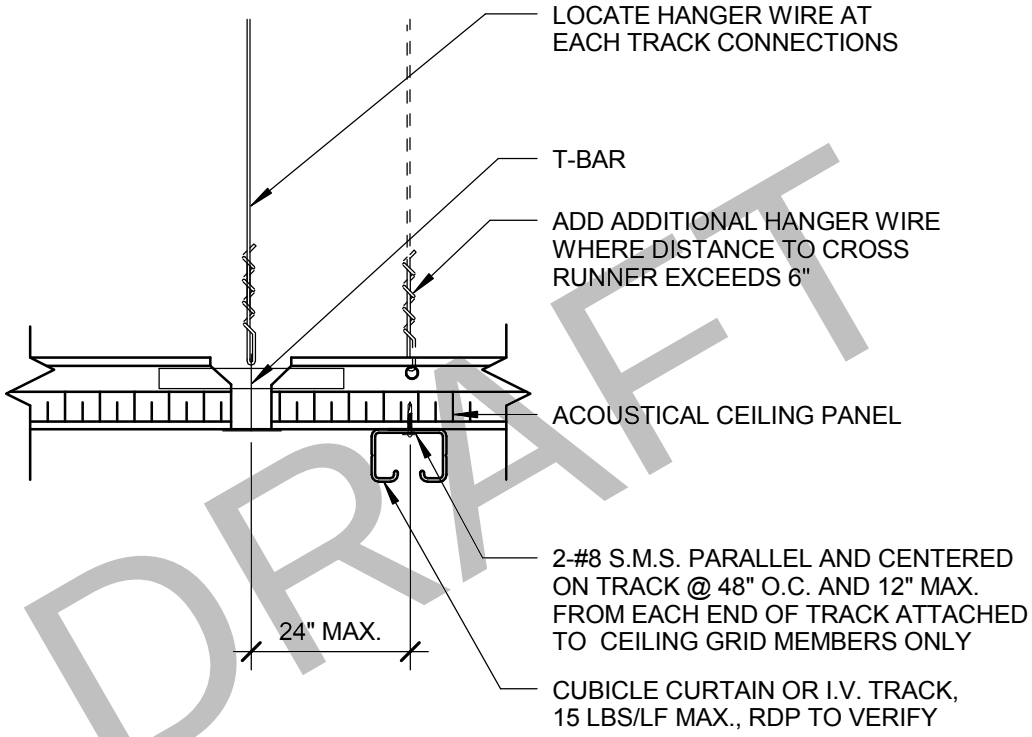

DRAFT

Section Title : OSHPD STANDARD SUSPENDED CEILING DETAILS		OPD No:
Sheet Title : SUSPENDED ACOUSTICAL CEILING - CUBICLE CURTAIN I.V. TRACK		CL2.70

Lamb Oxford Comments - Nov. 22. 2013

NOTES:

1. SEE GENERAL NOTE #15 ON CL0.03 AND CL0.04

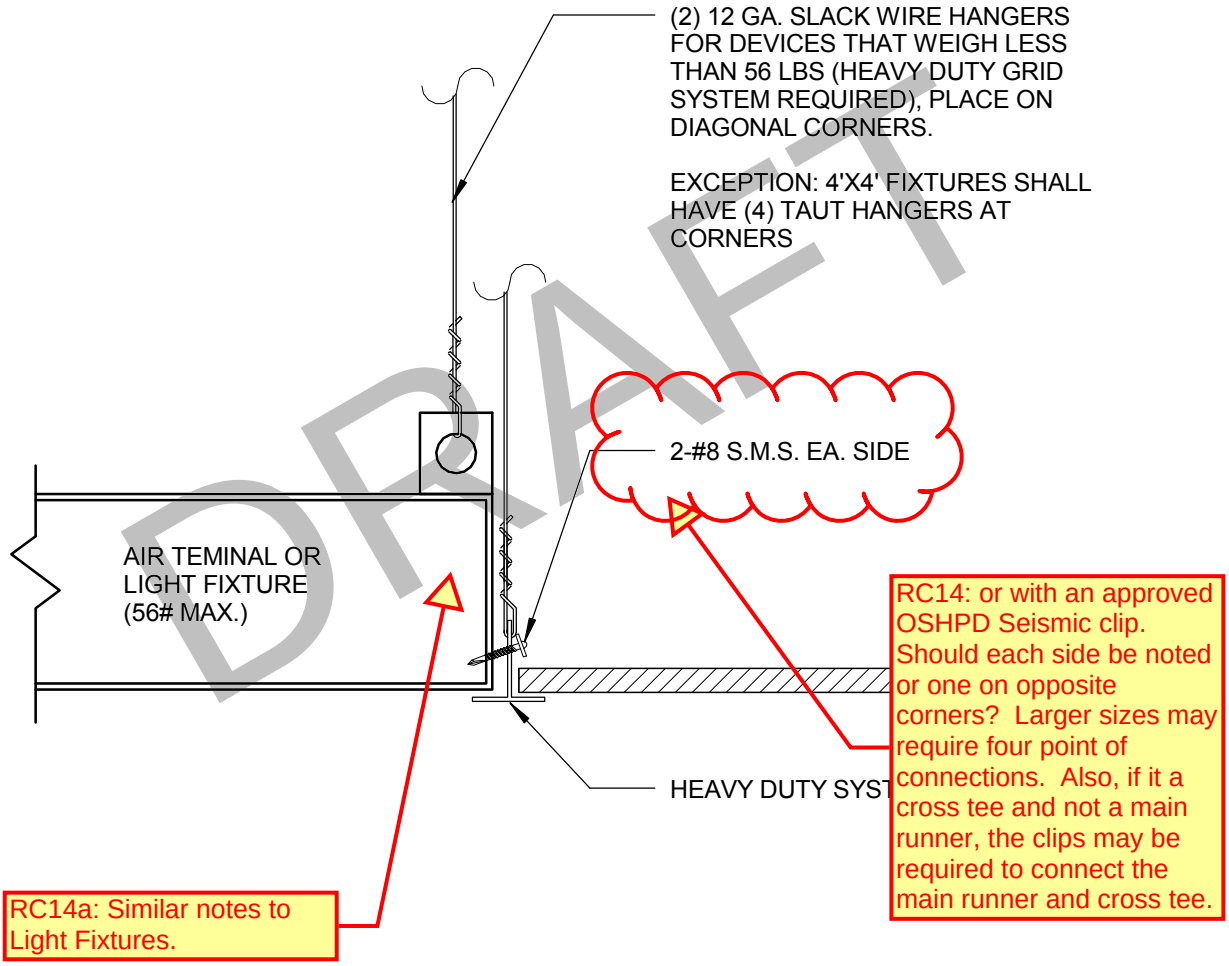

DRAFT

Section Title : OSHPD STANDARD SUSPENDED CEILING DETAILS		OPD No:
Sheet Title : SUSPENDED ACOUSTICAL CEILING - LIGHT FIXTURES/ AIR TERMINAL SUPPORT DETAIL		CL2.80

Lamb Oxford Comments - Nov. 22. 2013

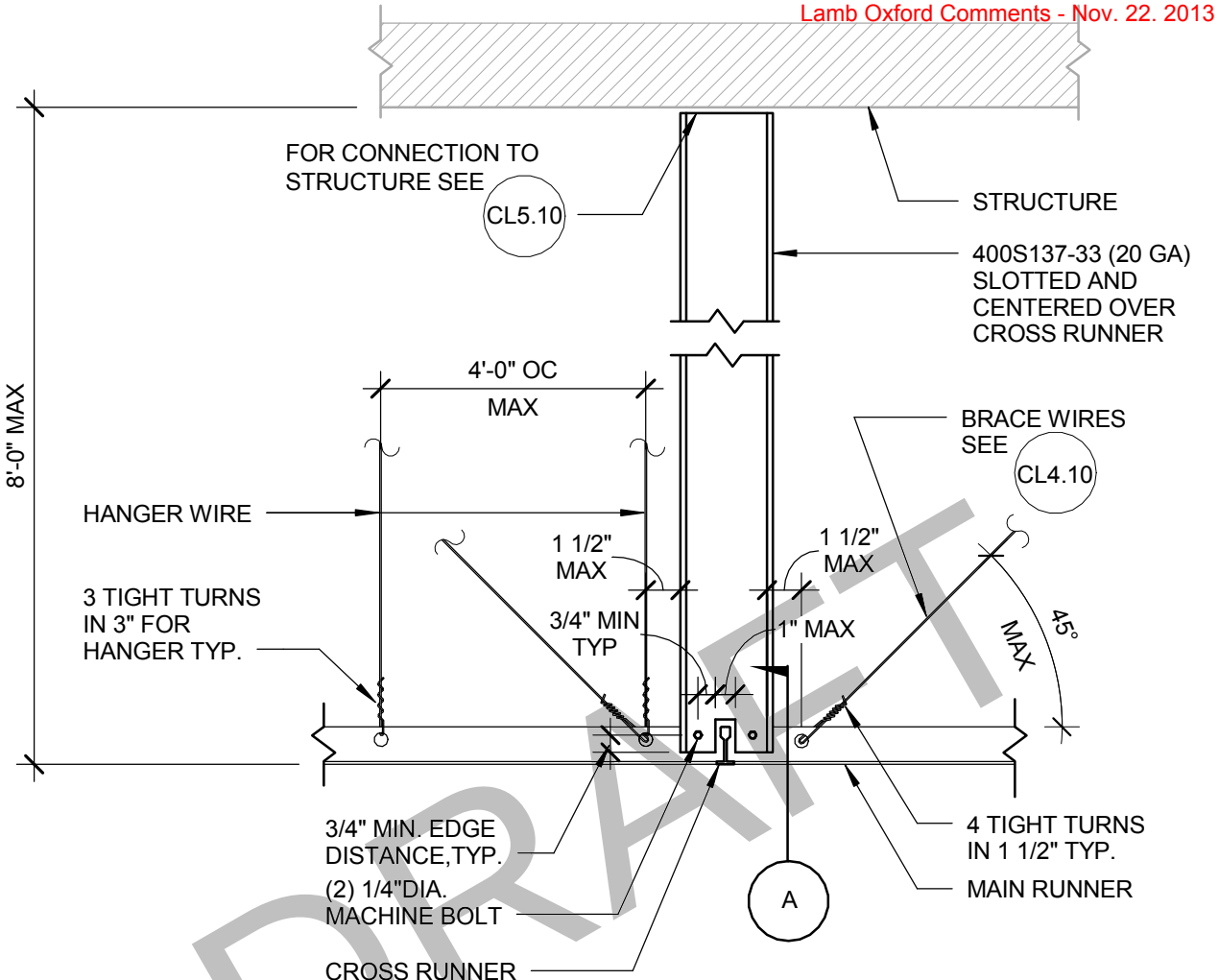

DRAFT

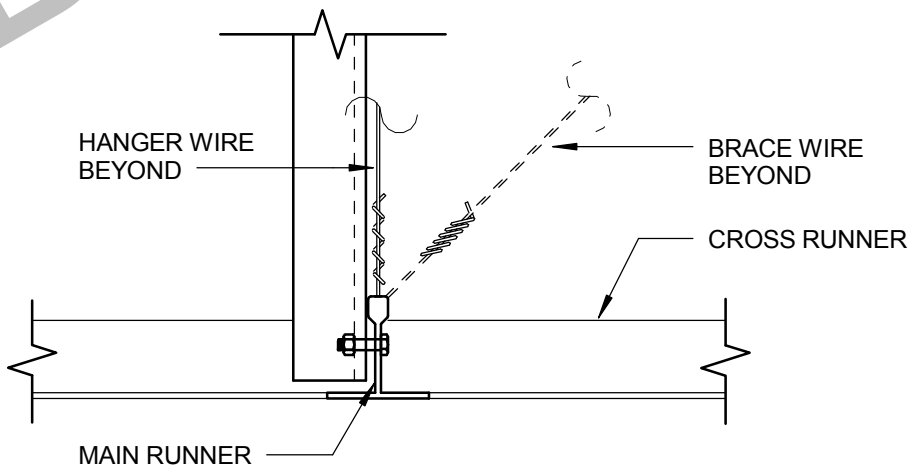

A SECTION

3" = 1'-0"

Section Title : OSHPD STANDARD SUSPENDED CEILING DETAILS		OPD No:
Sheet Title : SUSPENDED ACOUSTICAL CEILING - CHANNEL TYPE COMPRESSION STRUT		CL3.10

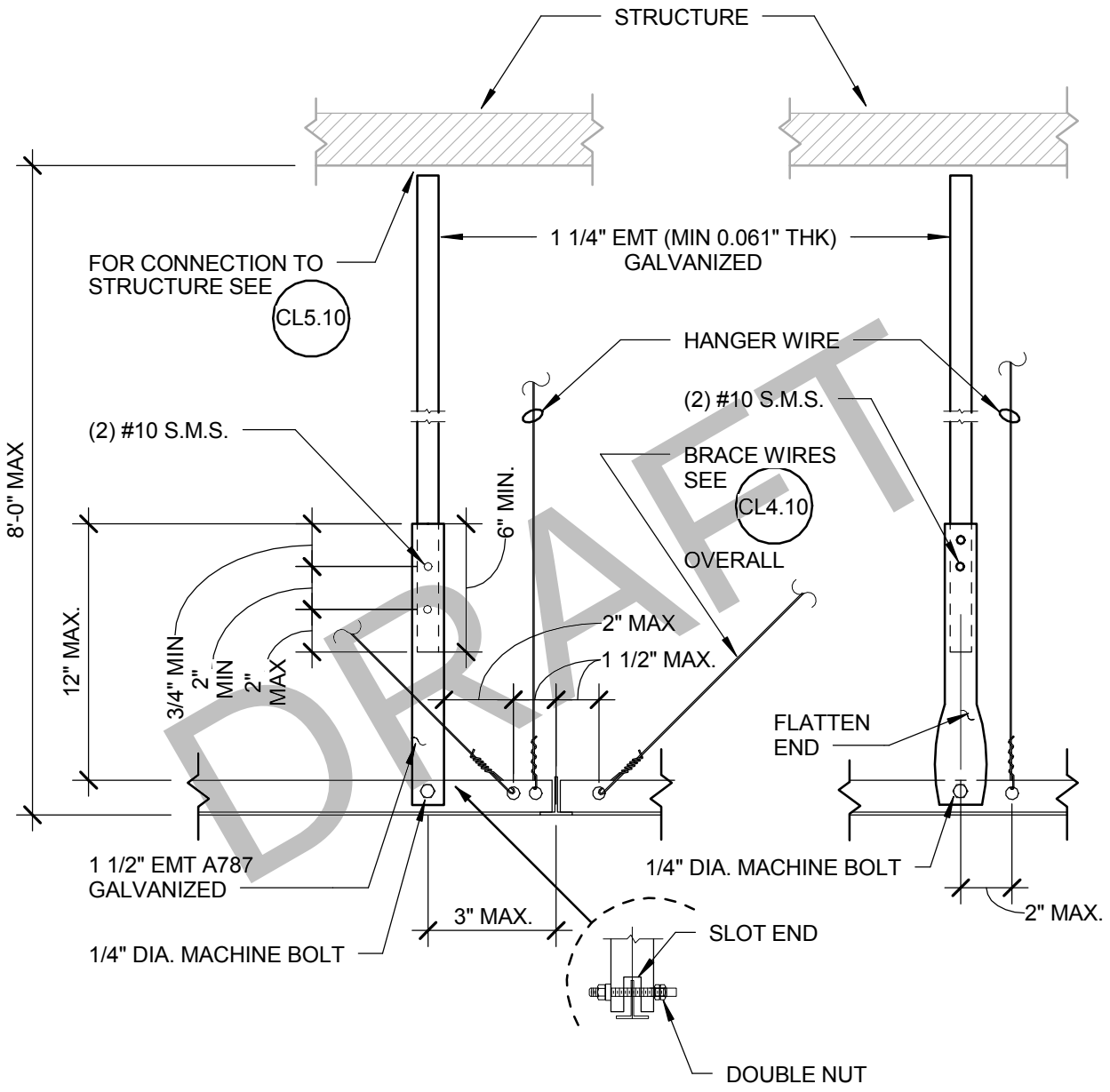

DRAFT

OPTION 1

OPTION 2

SEE OPTION 1 FOR
INFORMATION NOT SHOWN

Section Title : OSHPD STANDARD SUSPENDED CEILING DETAILS		OPD No:
Sheet Title : SUSPENDED ACOUSTICAL CEILING - TUBE TYPE COMPRESSION STRUT		CL3.20

Lamb Oxford Comments - Nov. 22. 2013

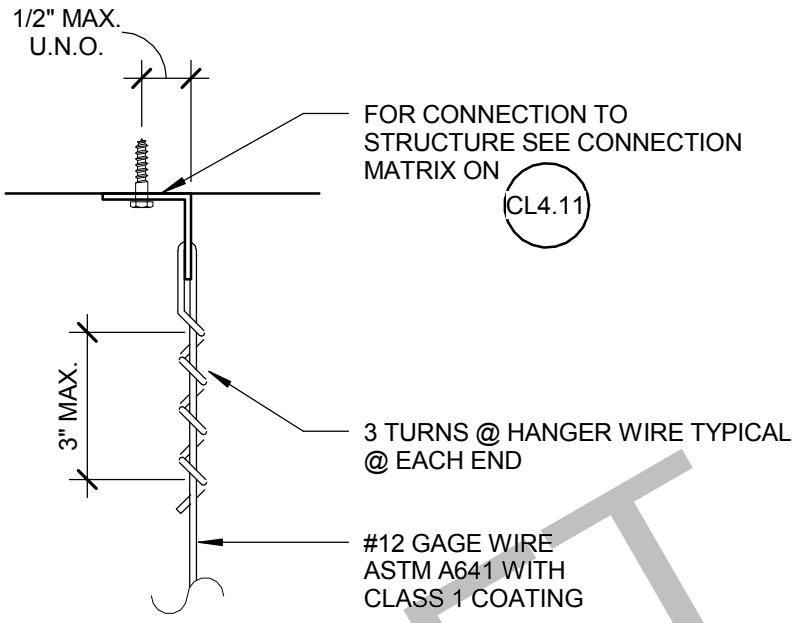

HANGER WIRE

DRAFT

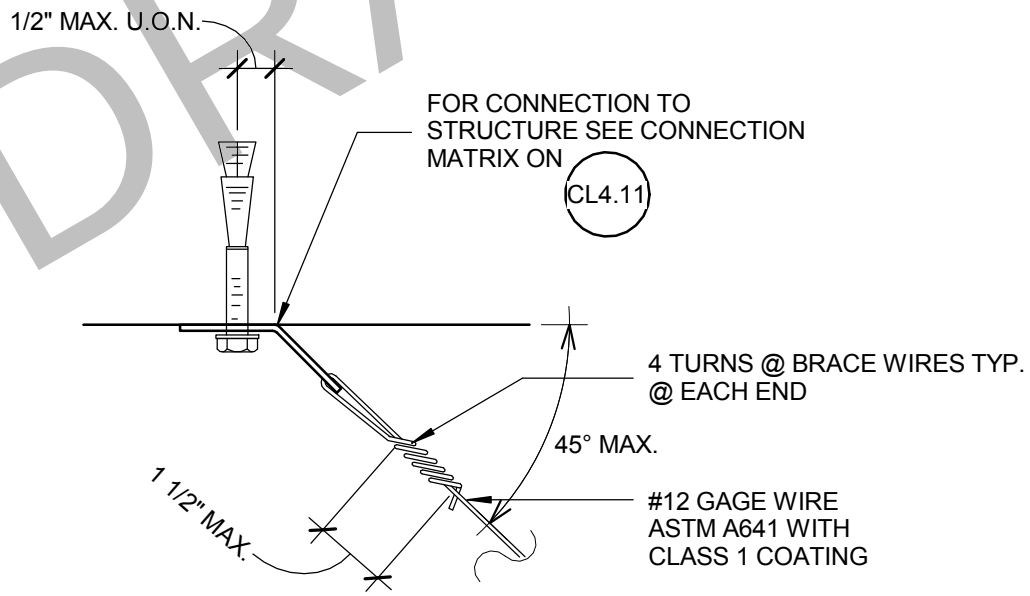

BRACING WIRE

Section Title : OSHPD STANDARD SUSPENDED CEILING DETAILS		OPD No:
Sheet Title : HANGER & BRACING WIRE CONNECTION - TYPICAL WIRE TURNS		CL4.10

STRUCTURAL CONDITION OF FLOOR/ ROOF ABOVE SUSPENDED CEILING	APPLICABLE HANGER WIRE DETAIL	APPLICABLE BRACING WIRE DETAIL
CONCRETE FILLED METAL DECK	CL4.21	CL4.31
CONCRETE SLAB, BEAM, OR JOIST	CL4.22	CL4.32
STRUCTURAL STEEL	CL4.23	CL4.33
SAWN TIMBER	CL4.24	CL4.34
METAL STUD WALL	CL4.25	CL4.35

DRAFT

Section Title : OSHPD STANDARD SUSPENDED CEILING DETAILS

OPD No:

Sheet Title : HANGER & BRACING WIRE MATRIX

CL4.11

Lamb Oxford Comments - Nov. 22. 2013

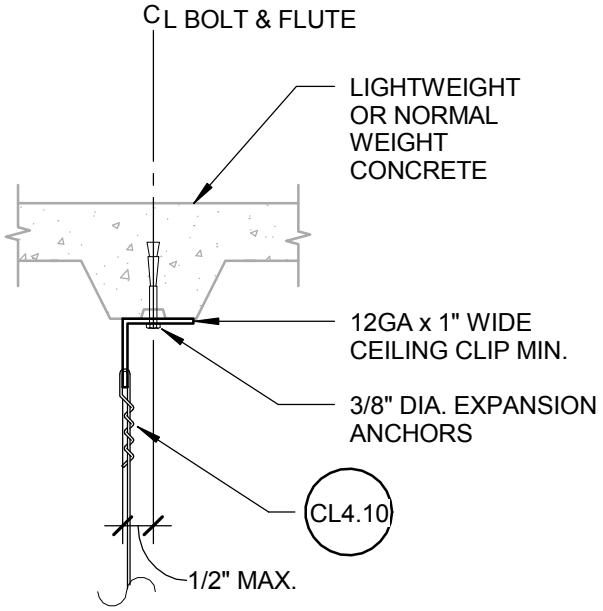

OPTION 1

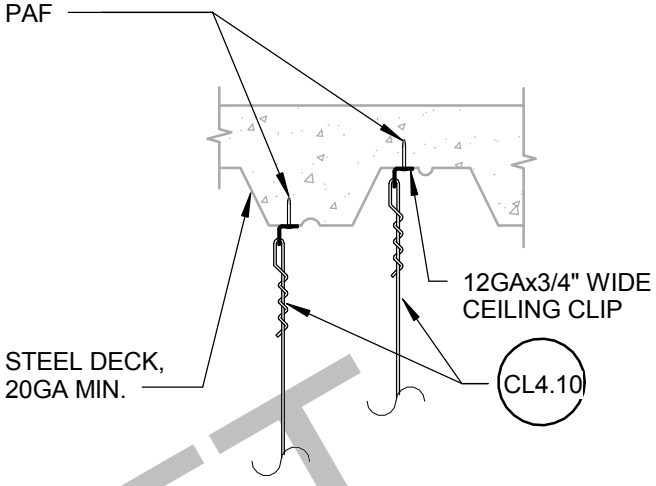

OPTION 2

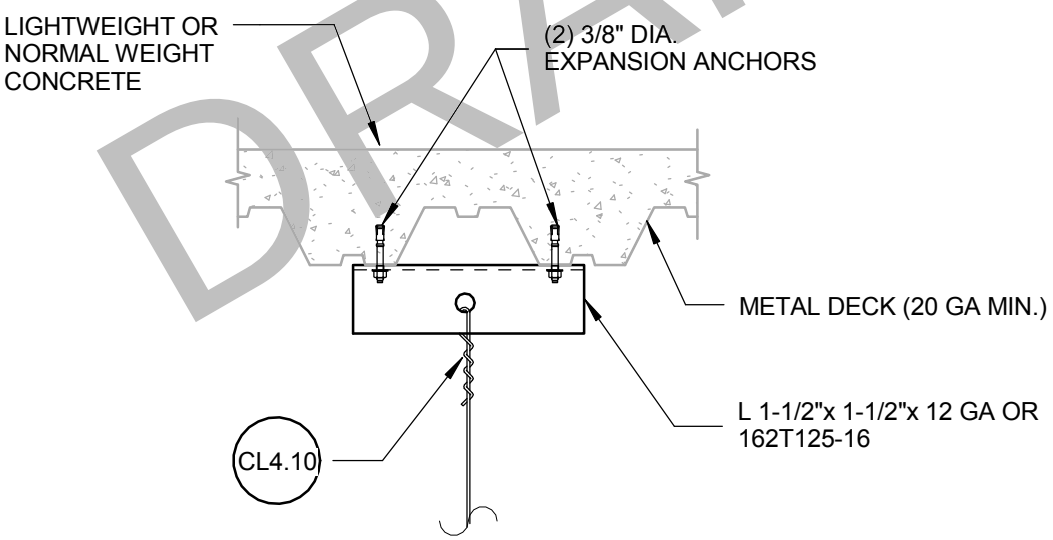

OPTION 3

DRAFT

NOTES:

1. LOAD TEST IN ACCORDANCE WITH GENERAL NOTE 14(g), PAGE CL0.03 SHALL BE REQUIRED

2. REFER TO CL4.10 FOR ADDITIONAL DETAILS

Section Title : OSHPD STANDARD SUSPENDED CEILING DETAILS	OPD No:
Sheet Title : HANGER WIRE CONNECTION TO CONCRETE FILLED METAL DECK	CL4.21

Lamb Oxford Comments - Nov. 22. 2013

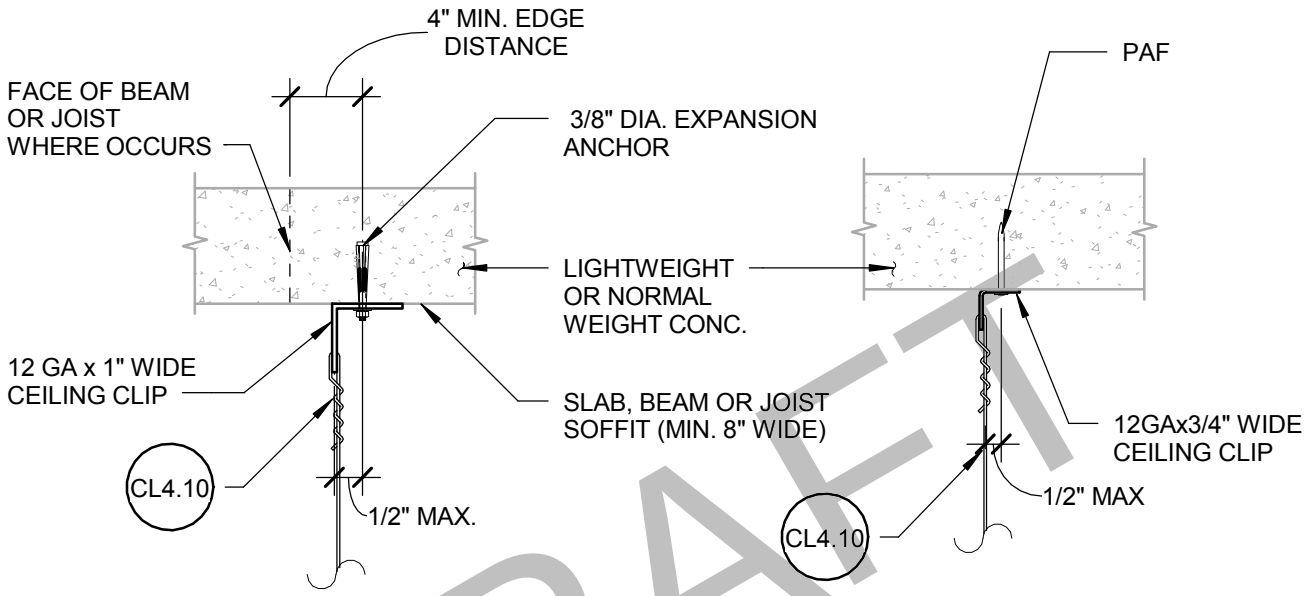

OPTION 1 **OPTION 2**

DRAFT

NOTES:

1. LOAD TEST IN ACCORDANCE WITH GENERAL NOTE 14(g), PAGE CL0.03 SHALL BE REQUIRED
2. PRIOR TO INSTALLATION, REINFORCING/PRESTRESSING BAR LOCATIONS SHALL BE DETERMINED BY NON-DESTRUCTIVE TESTING
3. REFER TO CL4.10 FOR ADDITIONAL DETAILS

RC15: Results of scan, etc. should be submitted to the IOR prior to commencement of work.

Section Title : OSHPD STANDARD SUSPENDED CEILING DETAILS	OPD No:
Sheet Title : HANGER WIRE CONNECTION TO CONCRETE SLAB, BEAM, OR JOIST	CL4.22

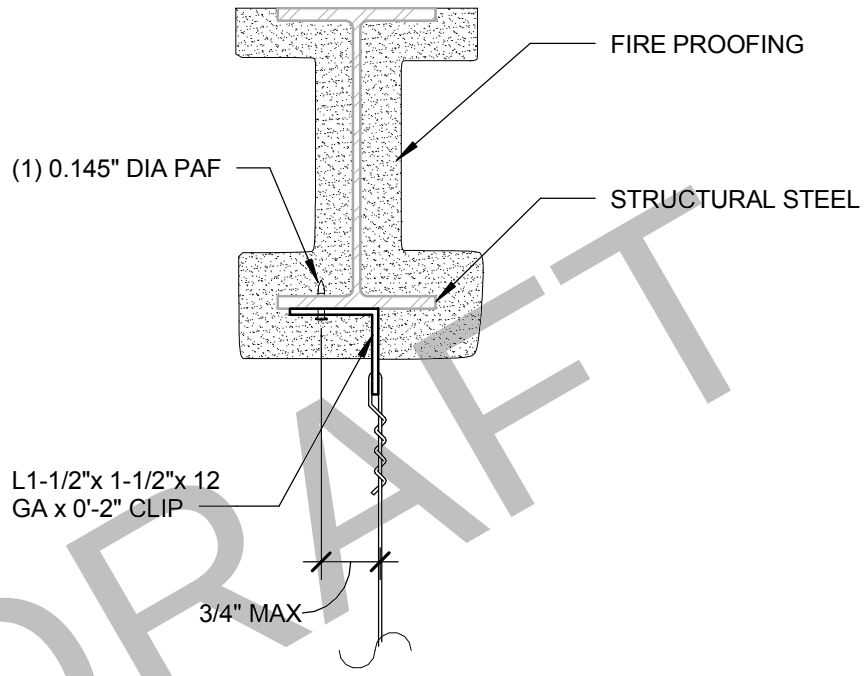

DRAFT

HANGER WIRE

NOTES :

1. BEAM FLANGE THICKNESS SHALL NOT BE LESS THAN 3/16" OR MORE THAN 3/8"
2. FRAMING MEMBERS SHALL BE DESIGNED TO CARRY THE CEILING LOADS, RDP TO VERIFY
3. RDP IN RESPONSIBLE CHARGE, I.O.R. AND CONTRACTOR SHALL VERIFY THAT NO PAF IS INSTALLED IN THE PROTECTED ZONE OF ANY STEEL MEMBER, SEE ANSI/AISC 341-10.

Section Title : OSHPD STANDARD SUSPENDED CEILING DETAILS		OPD No:
Sheet Title : HANGER WIRE CONNECTION TO STRUCTURAL STEEL		CL4.23

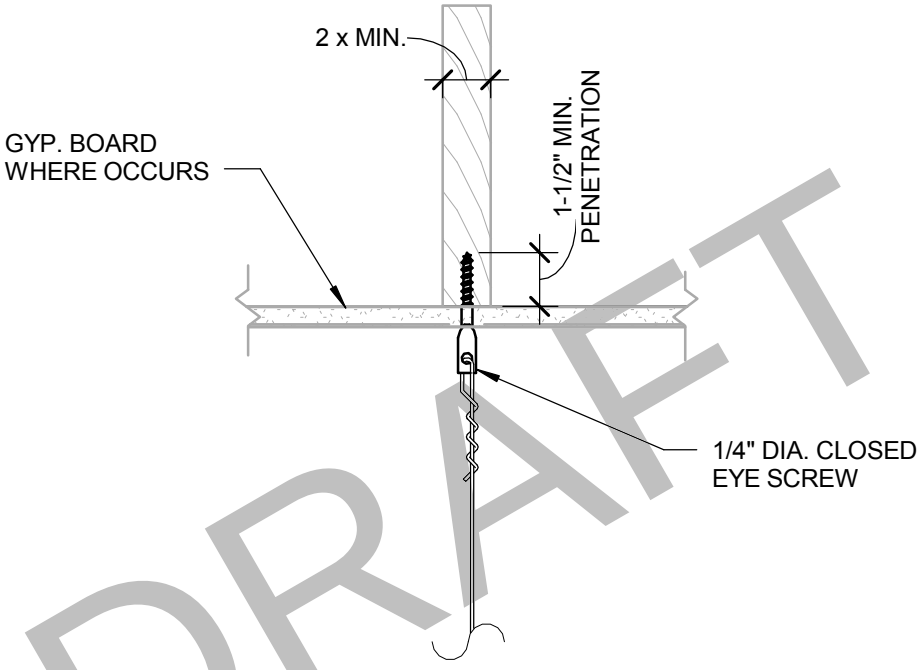

DRAFT

HANGER WIRE

NOTES:
1. FRAMING MEMBERS SHALL BE DESIGNED TO CARRY THE CEILING LOADS, RDP TO VERIFY

2. RDP SHALL VERIFY THAT SCREWS AT THE BOTTOM FLANGE OF TRUSS IS ACCEPTABLE

Section Title : OSHPD STANDARD SUSPENDED CEILING DETAILS	OPD No:
Sheet Title : HANGER WIRE CONNECTION TO SAWN TIMBER	CL4.24

Lamb Oxford Comments - Nov. 22. 2013

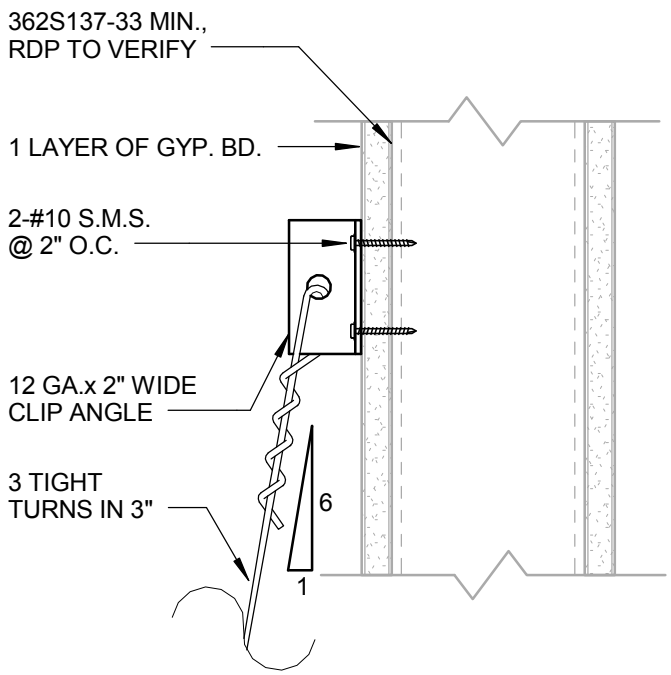

OPTION 1

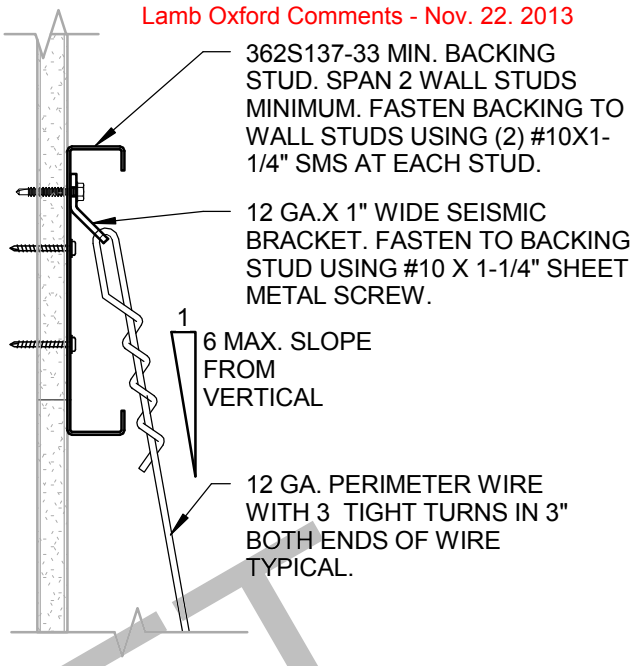

OPTION 2

DRAFT

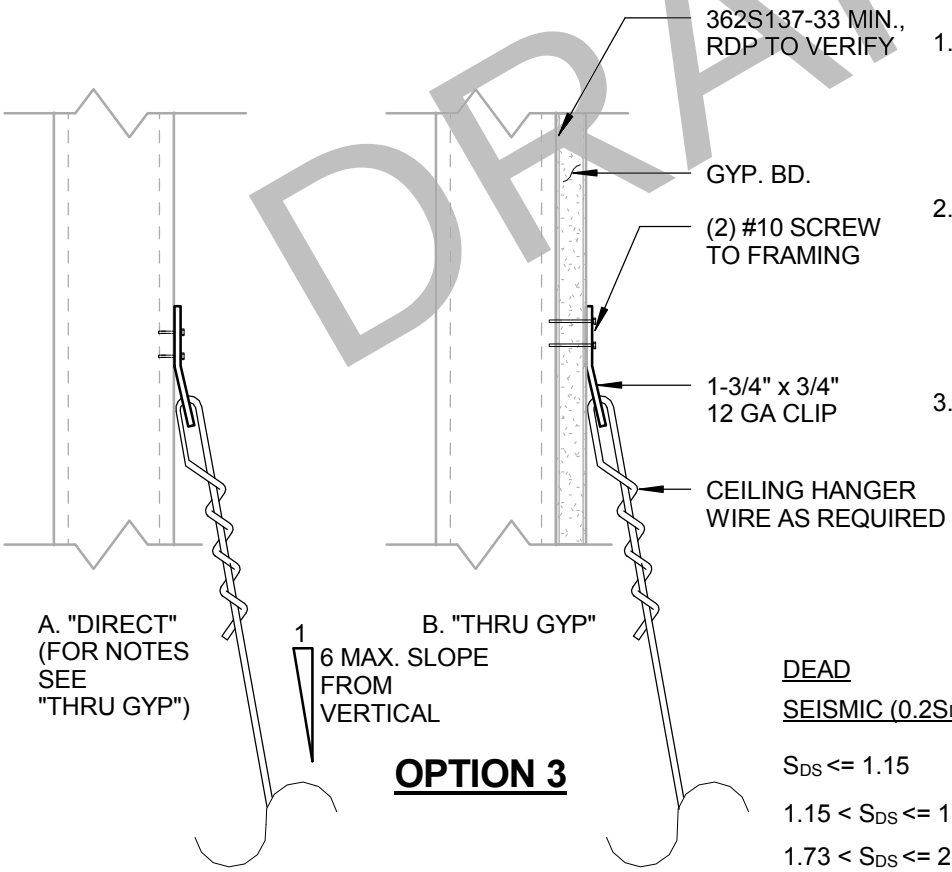

OPTION 3

NOTES:

1. THIS IS APPLIED FOR PERIMETER WIRE ATTACHEMENT OR WHERE OBSTRUCTION PREVENTS ATTACHMENT TO STRUCTURE ABOVE
2. RDP SHALL DESIGN FRAMING WALL TO CARRY THE CEILING LOAD. SEE TABLE BELOW FOR LOADS. LOADS ASSUME A TRIBUTARY AREA OF 16 SQ FT AND ARE UNFACTORED.
3. WALLS SHALL BE DESIGNED FOR HANGER FORCES BELOW. AT FREE JOINT, HANGER WIRE SHALL HAVE A MINIMUM STRETCH LENGTH OF 12"

HANGER FORCES

	VERTICAL	HORIZONTAL
DEAD	64 LBS	11 LBS
SEISMIC ($0.2S_{DS}$ Wp)		
S_{DS} <= 1.15	11 LBS	2 LBS
1.15 < S_{DS} <= 1.73	19 LBS	3 LBS
1.73 < S_{DS} <= 2.50	23 LBS	4 LBS

Section Title : OSHPD STANDARD SUSPENDED CEILING DETAILS	OPD No:
Sheet Title : HANGER WIRE CONNECTION TO METAL STUD WALL	CL4.25

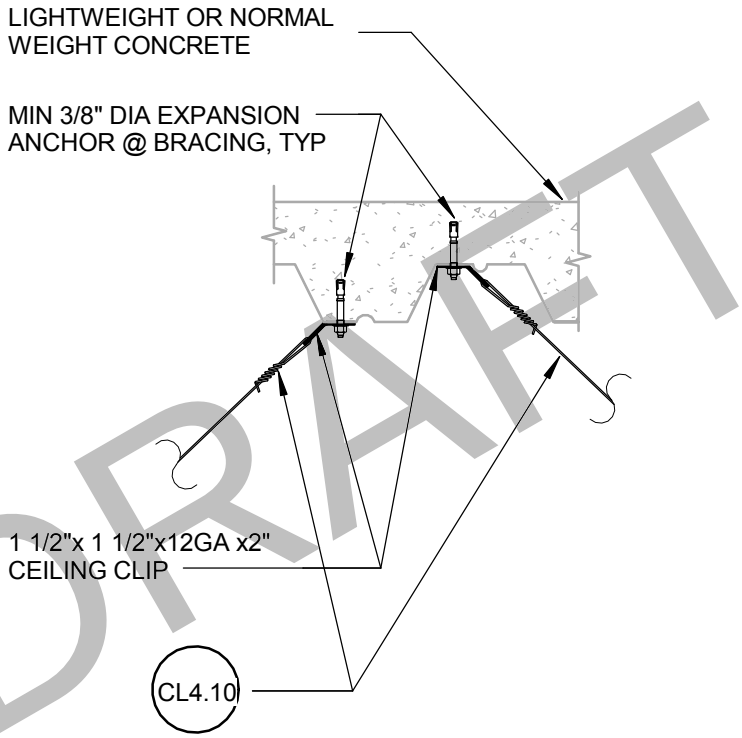

DRAFT

NOTES:
1. LOAD TEST IN ACCORDANCE WITH GENERAL NOTE 14(g), PAGE CL0.03 SHALL BE REQUIRED

2. REFER TO CL4.10 FOR ADDITIONAL DETAILS

Section Title : OSHPD STANDARD SUSPENDED CEILING DETAILS	OPD No:
Sheet Title : BRACING WIRE CONNECTION TO CONCRETE FILLED METAL DECK	CL4.31

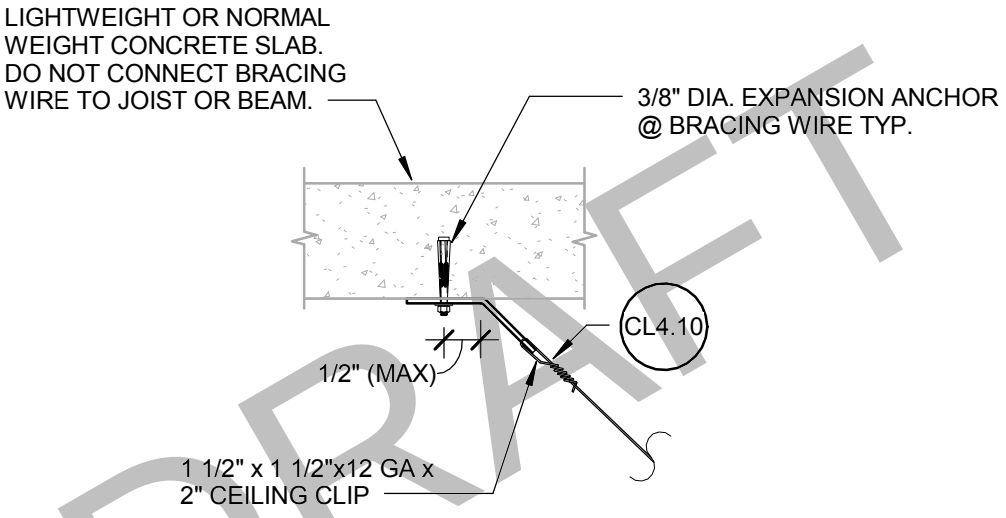

DRAFT

NOTES:

1. LOAD TEST IN ACCORDANCE WITH GENERAL NOTE 14(g), PAGE CL0.03 SHALL BE REQUIRED

2. REFER TO CL4.10 FOR ADDITIONAL DETAILS

Section Title : OSHPD STANDARD SUSPENDED CEILING DETAILS	OPD No:
Sheet Title : BRACING WIRE CONNECTION TO CONCRETE SLAB, BEAM, OR JOIST	CL4.32

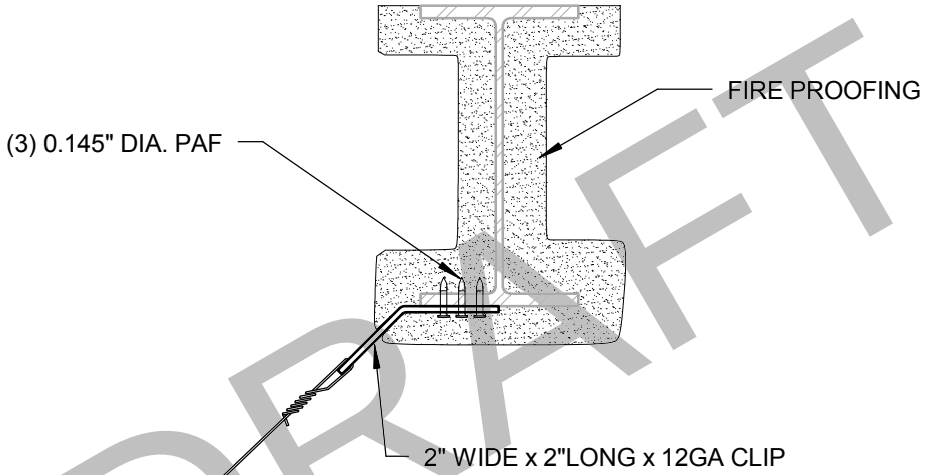

DRAFT

BRACING WIRE

NOTES :

1. BEAM FLANGE THICKNESS SHALL NOT BE LESS THAN 3/16" OR MORE THAN 3/8"

2. FRAMING MEMBERS SHALL BE DESIGNED TO CARRY THE CEILING LOADS, RDP TO VERIFY

3. RDP IN RESPONSIBLE CHARGE, I.O.R. AND CONTRACTOR SHALL VERIFY THAT NO PAF IS INSTALLED IN THE PROTECTED ZONE OF ANY STEEL MEMBER, SEE ANSI/AISC 341-10.

Section Title : OSHPD STANDARD SUSPENDED CEILING DETAILS		OPD No:
Sheet Title : BRACING WIRE CONNECTION TO STRUCTURAL STEEL		CL4.33

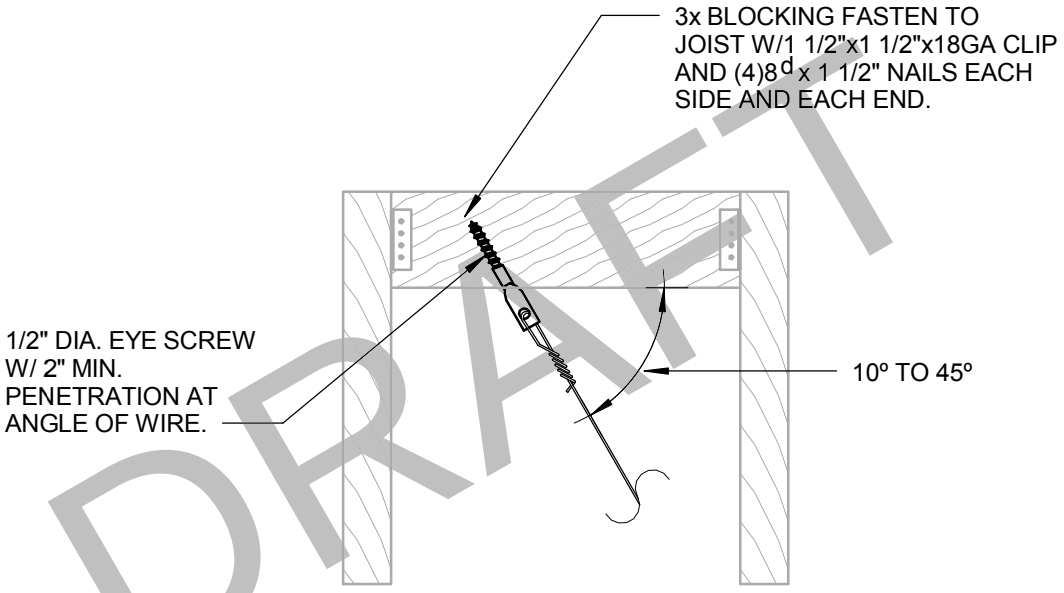

DRAFT

BRACING WIRE

NOTES:

1. FRAMING MEMBERS SHALL BE DESIGNED TO CARRY THE CEILING LOADS, RDP TO VERIFY
2. RDP SHALL VERIFY THAT SCREWS AT THE BOTTOM FLANGE OF TRUSS IS ACCEPTABLE

Section Title : OSHPD STANDARD SUSPENDED CEILING DETAILS		OPD No:
Sheet Title : BRACING WIRE CONNECTION TO SAWN TIMBER		CL4.34

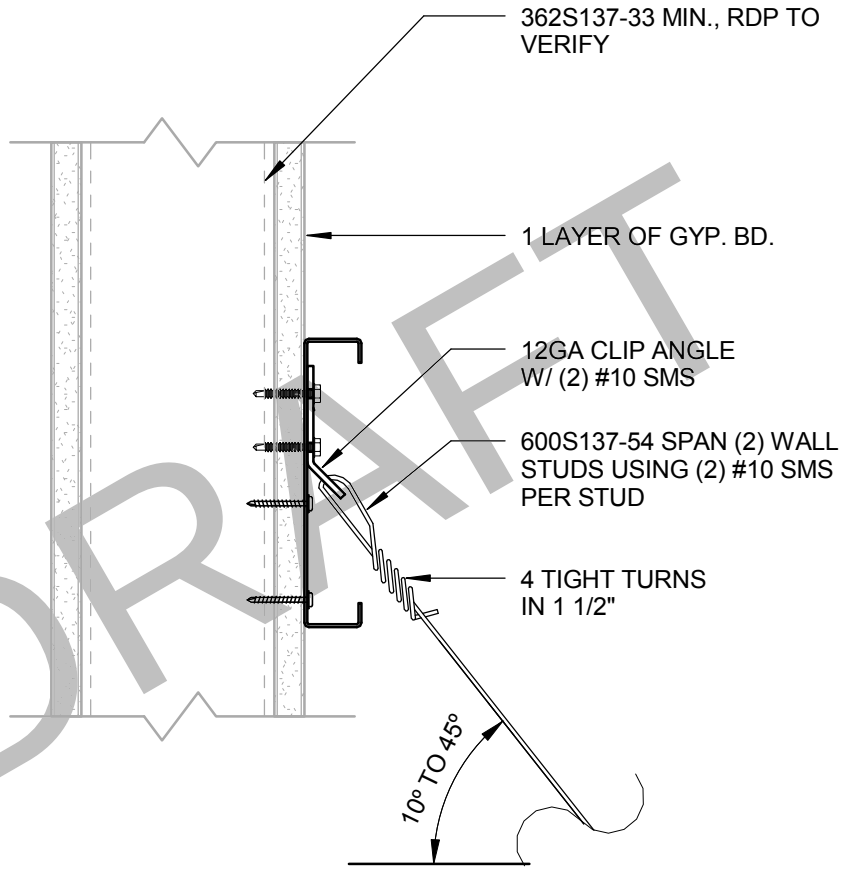

DRAFT

NOTES:

1. FRAMED WALLS SHALL BE DESIGNED TO CARRY THE CEILING LOADS, RDP TO VERIFY.

2. SEISMIC BRACE WIRE FORCE = 320 LBS (UNFACTORED). BRACING WIRE SHALL HAVE A MINIMUM STRETCH LENGTH OF 12", WHEN USED AT FREE JOINT.

Section Title : OSHPD STANDARD SUSPENDED CEILING DETAILS		OPD No:
Sheet Title : BRACING WIRE CONNECTION TO METAL STUD WALL		CL4.35

STRUCTURAL CONDITION OF FLOOR / ROOF ABOVE SUSPENDED CEILING	APPLICABLE DETAIL
CONCRETE FILLED METAL DECK	CL5.20
CONCRETE SLAB, BEAM, OR JOIST	CL5.30
STRUCTURAL STEEL	CL5.40
SAWN TIMBER WITH GYPSUM BOARD	CL5.50
SAWN TIMBER WITHOUT GYPSUM BOARD	CL5.60

DRAFT

Section Title : OSHPD STANDARD SUSPENDED CEILING DETAILS

OPD No:

Sheet Title : COMPRESSION STRUT CONNECTION - CONNECTION MATRIX

CL5.10

Lamb Oxford Comments - Nov. 22. 2013

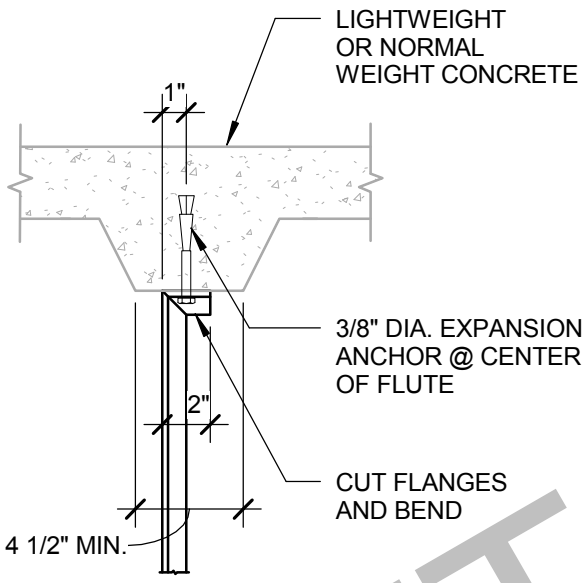

CHANNEL STRUT

DRAFT

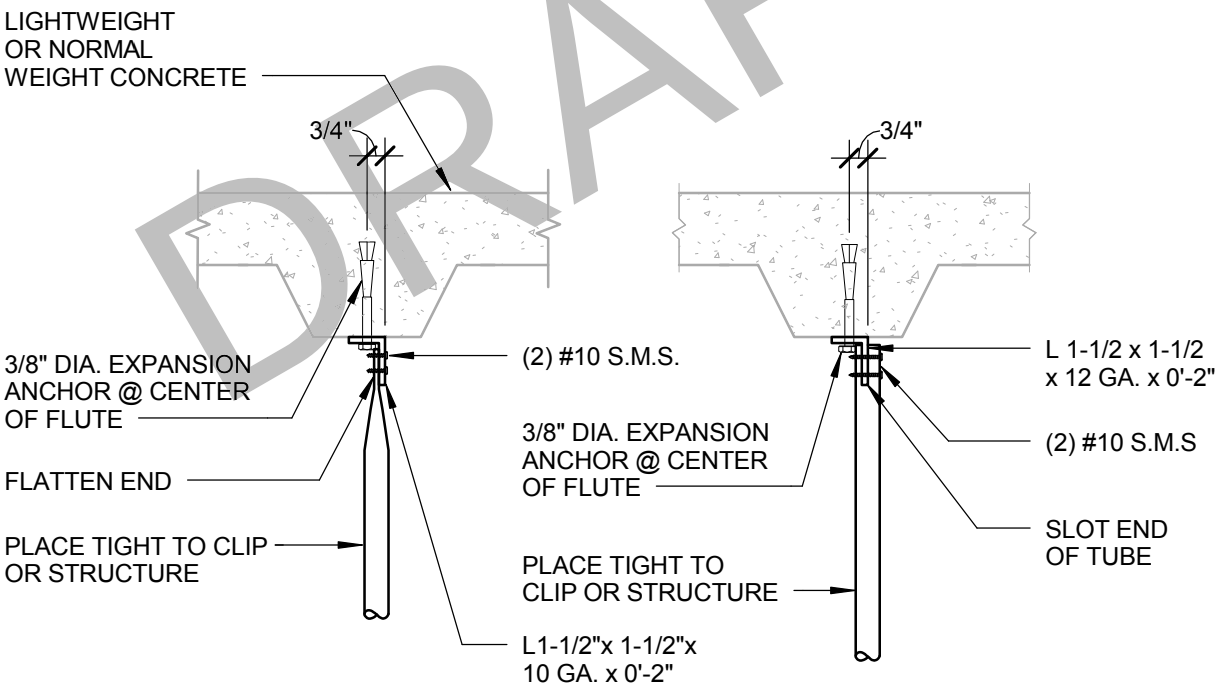

OPTION 1 **OPTION 2**

TUBE STRUT

Section Title : OSHPD STANDARD SUSPENDED CEILING DETAILS		OPD No:
Sheet Title : COMPRESSION STRUT CONNECTION TO CONCRETE FILLED METAL DECK		CL5.20

Lamb Oxford Comments - Nov. 22. 2013

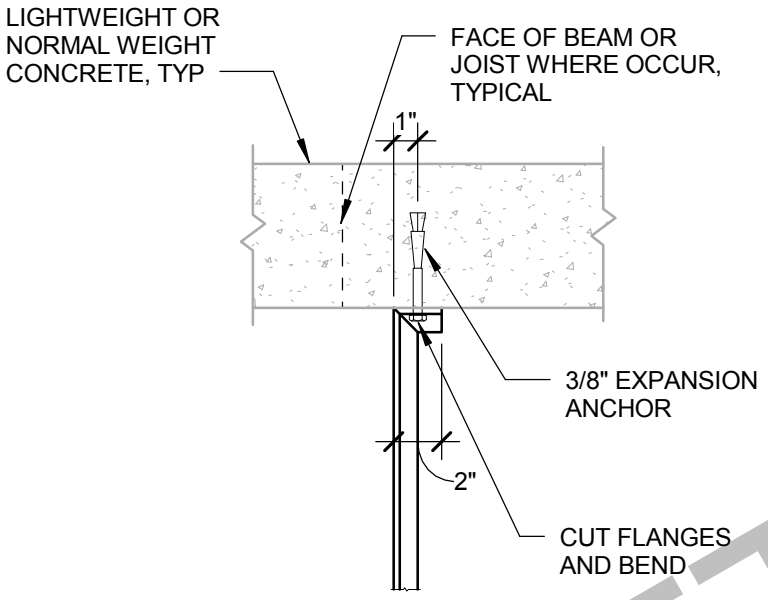

CHANNEL STRUT

DRAFT

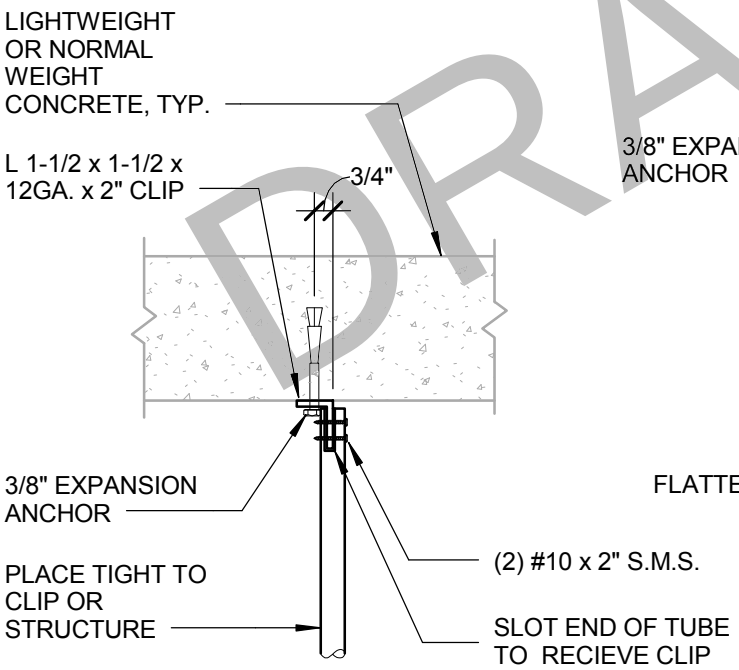

OPTION 1

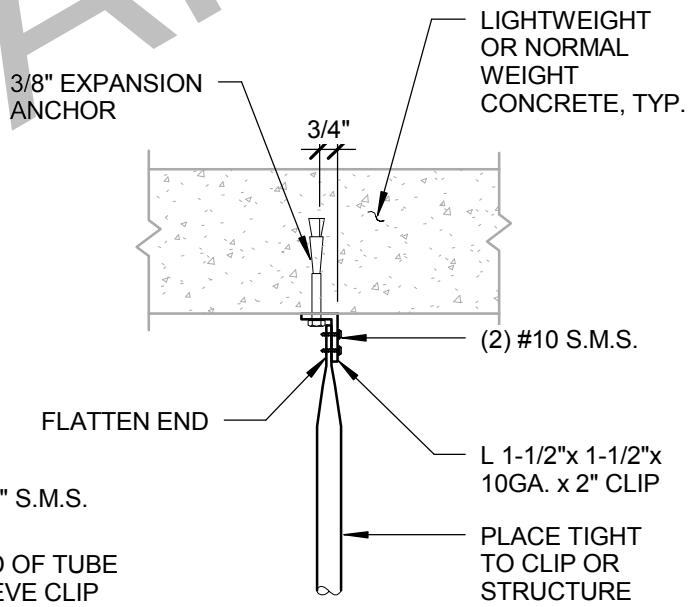

OPTION 2

TUBE STRUT

Section Title : OSHPD STANDARD SUSPENDED CEILING DETAILS	OPD No:
Sheet Title : COMPRESSION STRUT CONNECTION TO CONCRETE SLAB, BEAM, JOIST SOFFIT	CL5.30

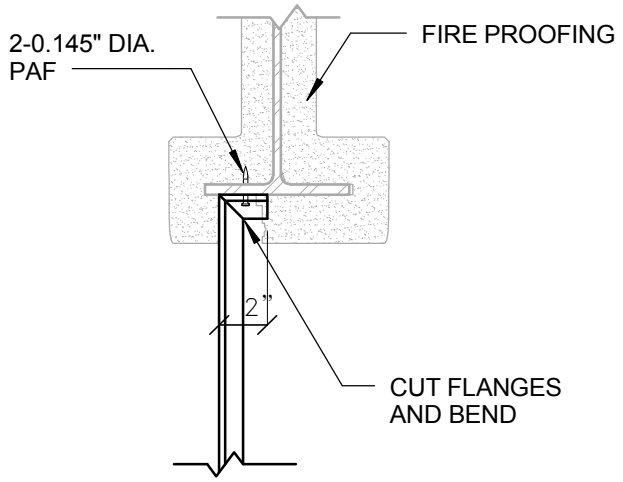

CHANNEL STRUT

DRAFT

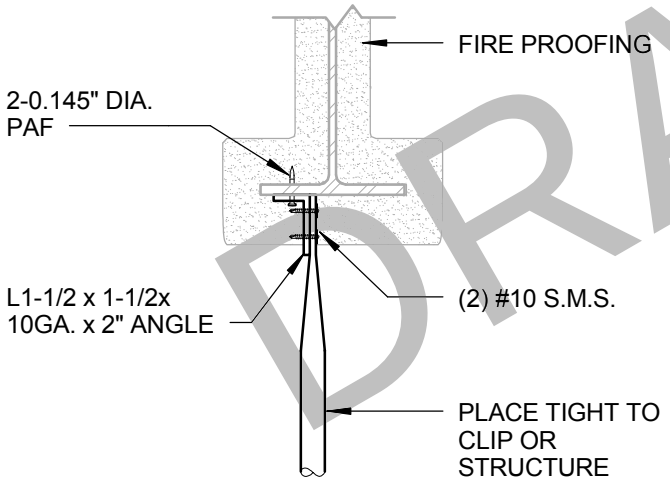

OPTION 1

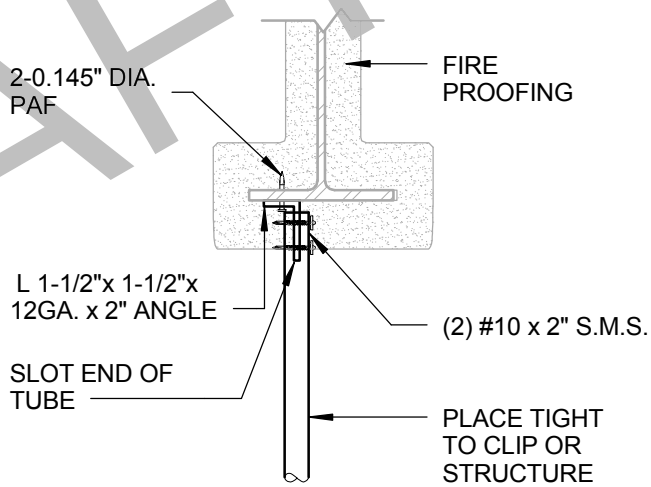

OPTION 2

TUBE STRUT

NOTES:

1. STRUCTURAL STEEL MEMBER SHALL HAVE A MINIMUM FLANGE THICKNESS OF 3/16" AND MAXIMUM OF 3/8".
2. FRAMING MEMBERS MUST BE DESIGNED TO CARRY THE CEILING LOADS, RDP TO VERIFY.
3. RDP IN RESPONSIBLE CHARGE, I.O.R. AND CONTRACTOR SHALL VERIFY THAT NO PAF IS INSTALLED IN THE PROTECTED ZONE OF ANY STEEL MEMBER, SEE ANSI/AISC 341-10.
4. SEE PAGES CL5.20 & CL5.30 FOR ADDITIONAL INFORMATION.

Section Title : OSHPD STANDARD SUSPENDED CEILING DETAILS		OPD No:
Sheet Title : COMPRESSION STRUT CONNECTION TO STRUCTURAL STEEL		CL5.40

Lamb Oxford Comments - Nov. 22, 2013

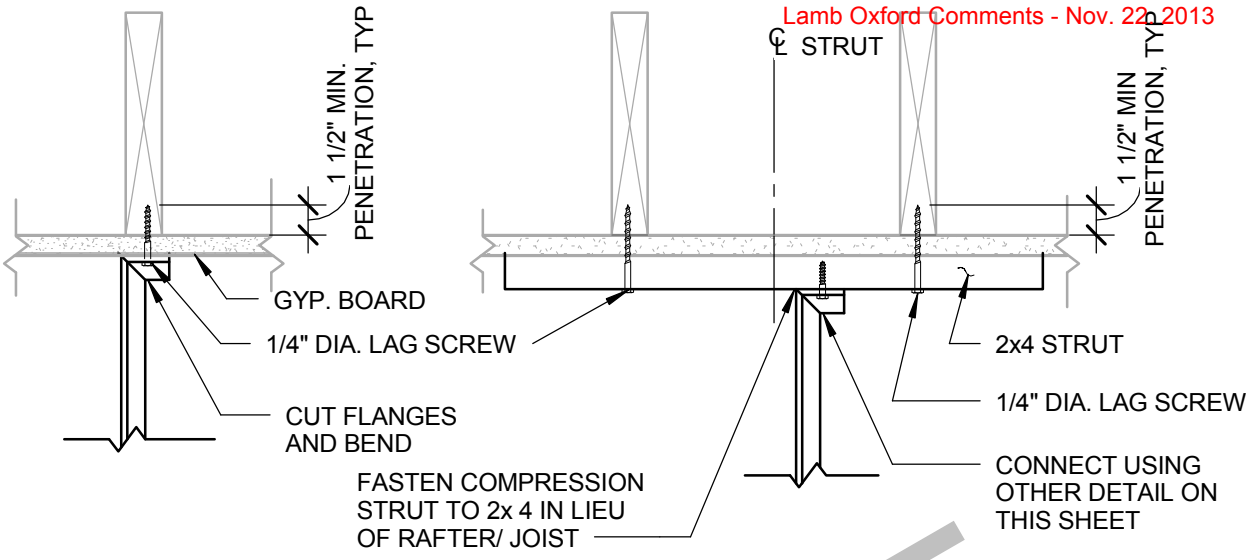

OPTION 1 **OPTION 2**

CHANNEL STRUT

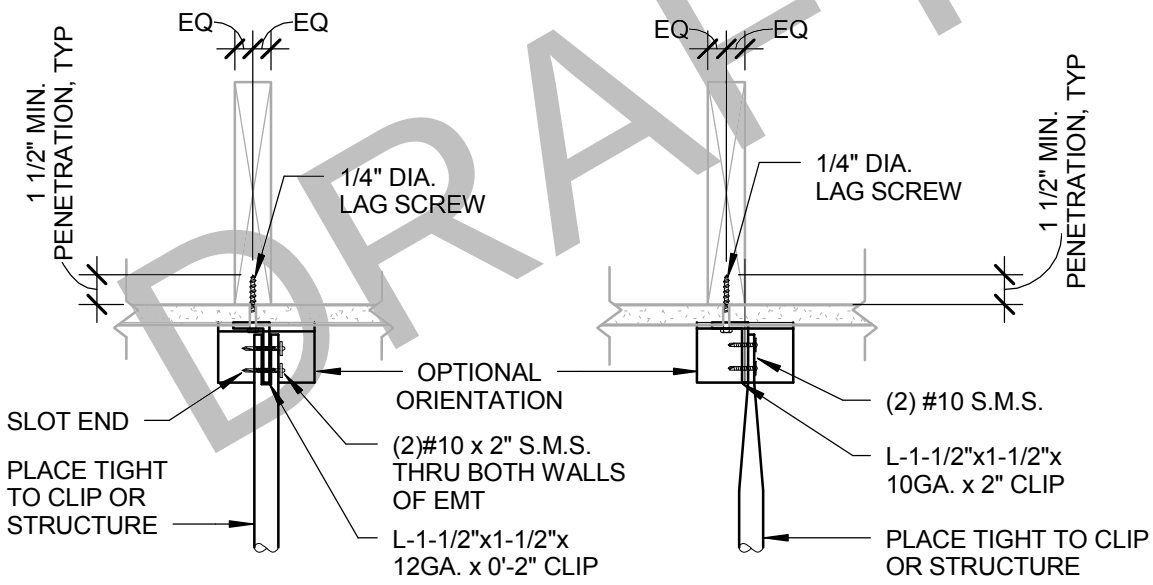

OPTION 1 **OPTION 2**

TUBE STRUT

DRAFT

NOTES:

1. FRAMING MEMBERS MUST BE DESIGNED TO CARRY THE CEILING LOADS, RDP TO VERIFY.
2. RDP SHALL VERIFY THAT SCREWS AT THE BOTTOM FLANGE OF TRUSS IS ACCEPTABLE
3. SEE PAGES CL5.20 & CL5.30 FOR ADDITIONAL INFORMATION

Section Title : OSHPD STANDARD SUSPENDED CEILING DETAILS	OPD No:
Sheet Title : COMPRESSION STRUT CONNECTION TO SAWN TIMBER WITH GYPSUM BOARD	CL5.50

Lamb Oxford Comments - Nov. 22. 2013

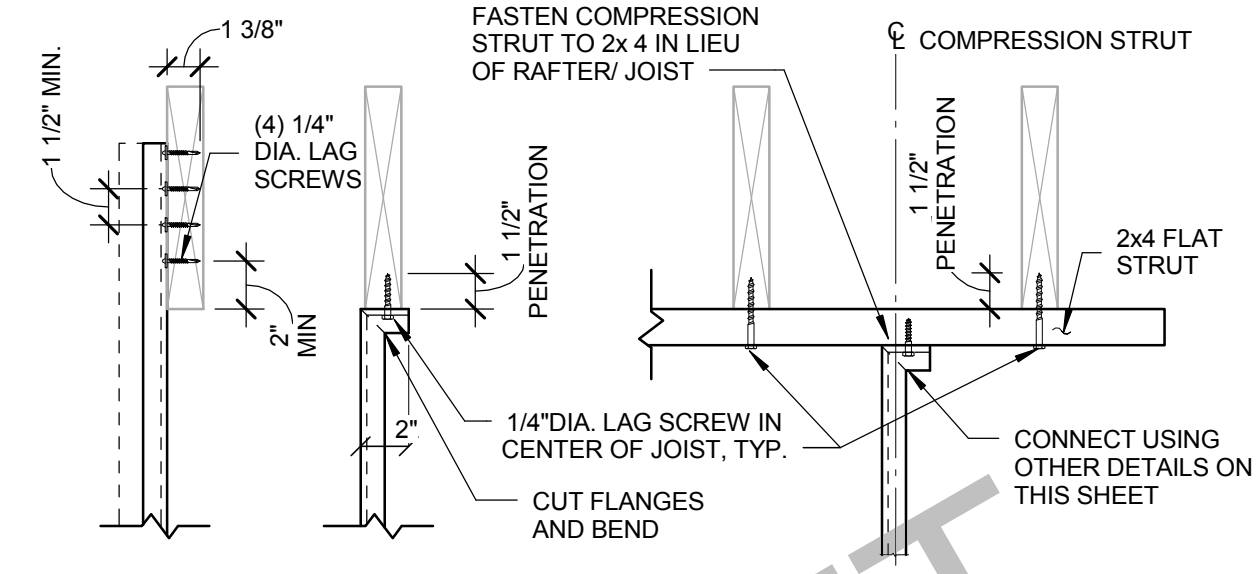

OPTION 1 **OPTION 2** **OPTION 3**

CHANNEL STRUT

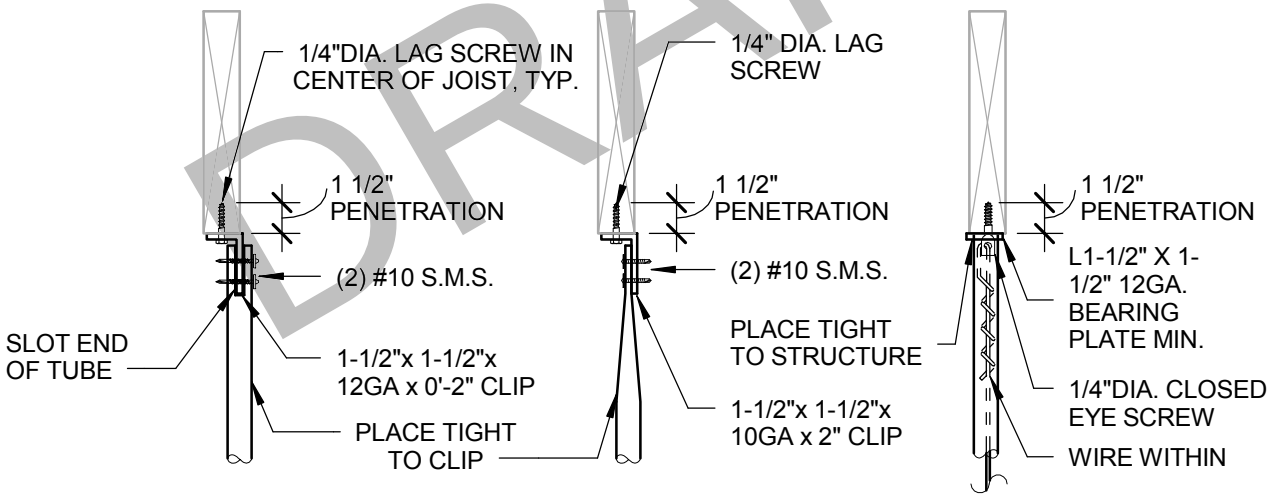

OPTION 1 **OPTION 2** **OPTION 3**

TUBE STRUT

DRAFT

NOTES:

1. FRAMING MEMBERS MUST BE DESIGNED TO CARRY THE CEILING LOADS, RDP TO VERIFY.
2. RDP SHALL VERIFY THAT SCREWS AT THE BOTTOM FLANGE OF TRUSS IS ACCEPTABLE.
3. SEE PAGES CL5.20, CL5.30 & CL5.50 FOR ADDITIONAL INFORMATION.

Section Title : OSHPD STANDARD SUSPENDED CEILING DETAILS		OPD No:
Sheet Title : COMPRESSION STRUT CONNECTION TO SAWN TIMBER WITHOUT GYPSUM BOARD		CL5.60

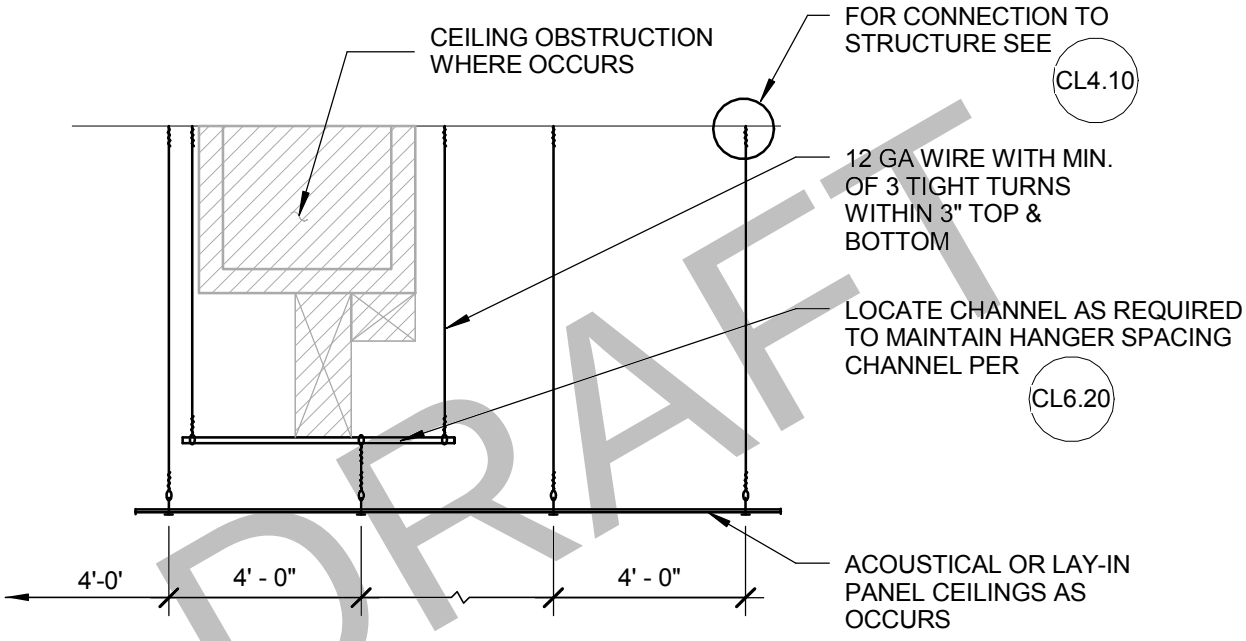

DRAFT

TRAPEZE SUPPORT

Section Title : OSHPD STANDARD SUSPENDED CEILING DETAILS		OPD No:
Sheet Title : OBSTRUCTION-COUNTER SLOPING WIRES AND TRAPEZE CONDITION		CL6.10

Lamb Oxford Comments - Nov. 22. 2013

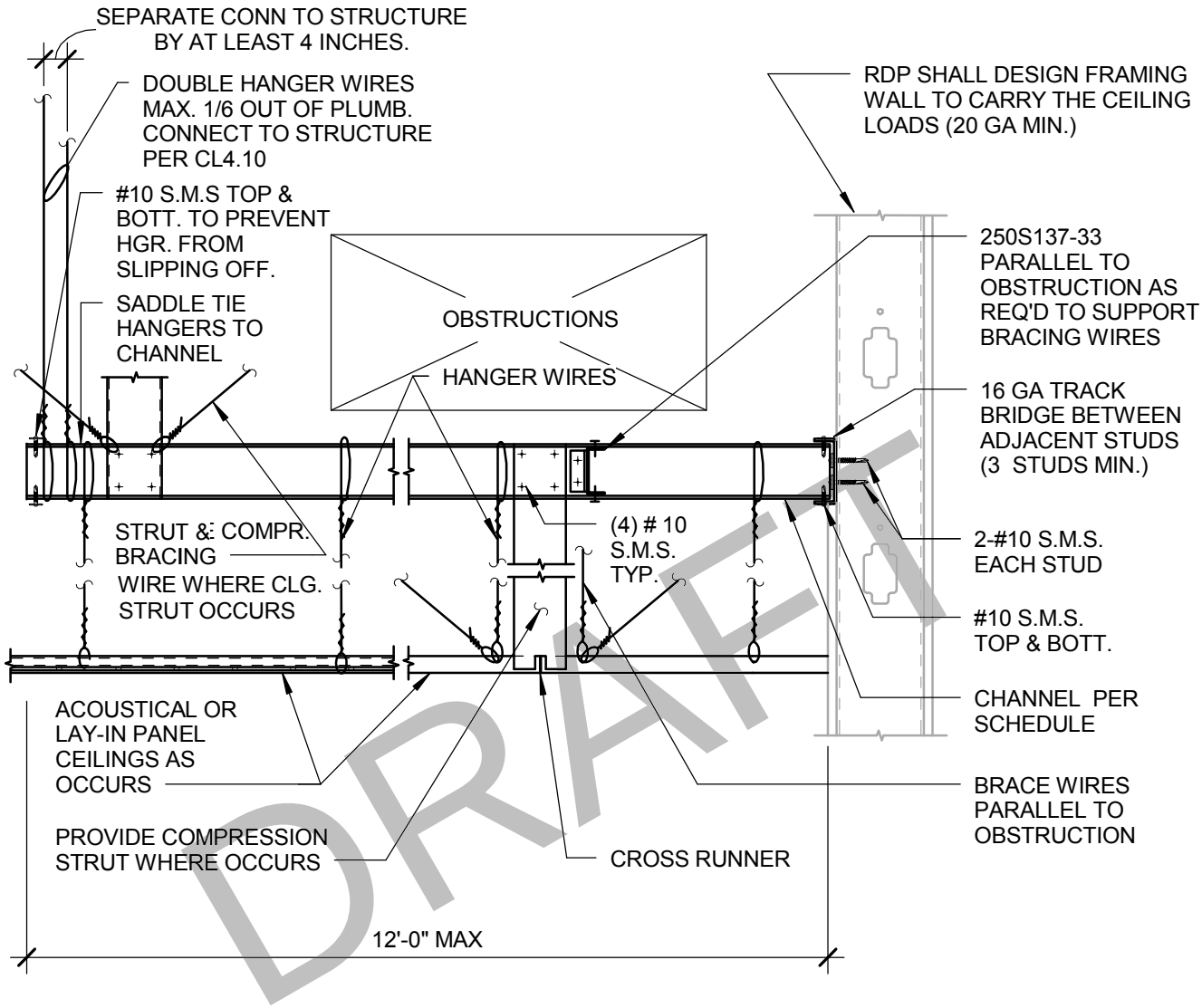

DRAFT

WALL WHERE OCCURS

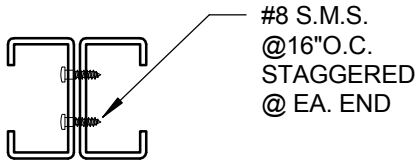

DBL. SECTION

SPAN	SECTION
4'-0"	250S137-33
6'-0"	250S137-54
8'-0"	400S137-54
10'-0"	400S162-54
12'-0"	2 - 400S200-54

Section Title : OSHPD STANDARD SUSPENDED CEILING DETAILS	OPD No:
Sheet Title : OBSTRUCTION-BRIDGE AT LARGE OFFSET CONDITION	CL6.20

RC 16: A similar detail can be used to support the fixed side of a free-floating slip joint or expansion joint.

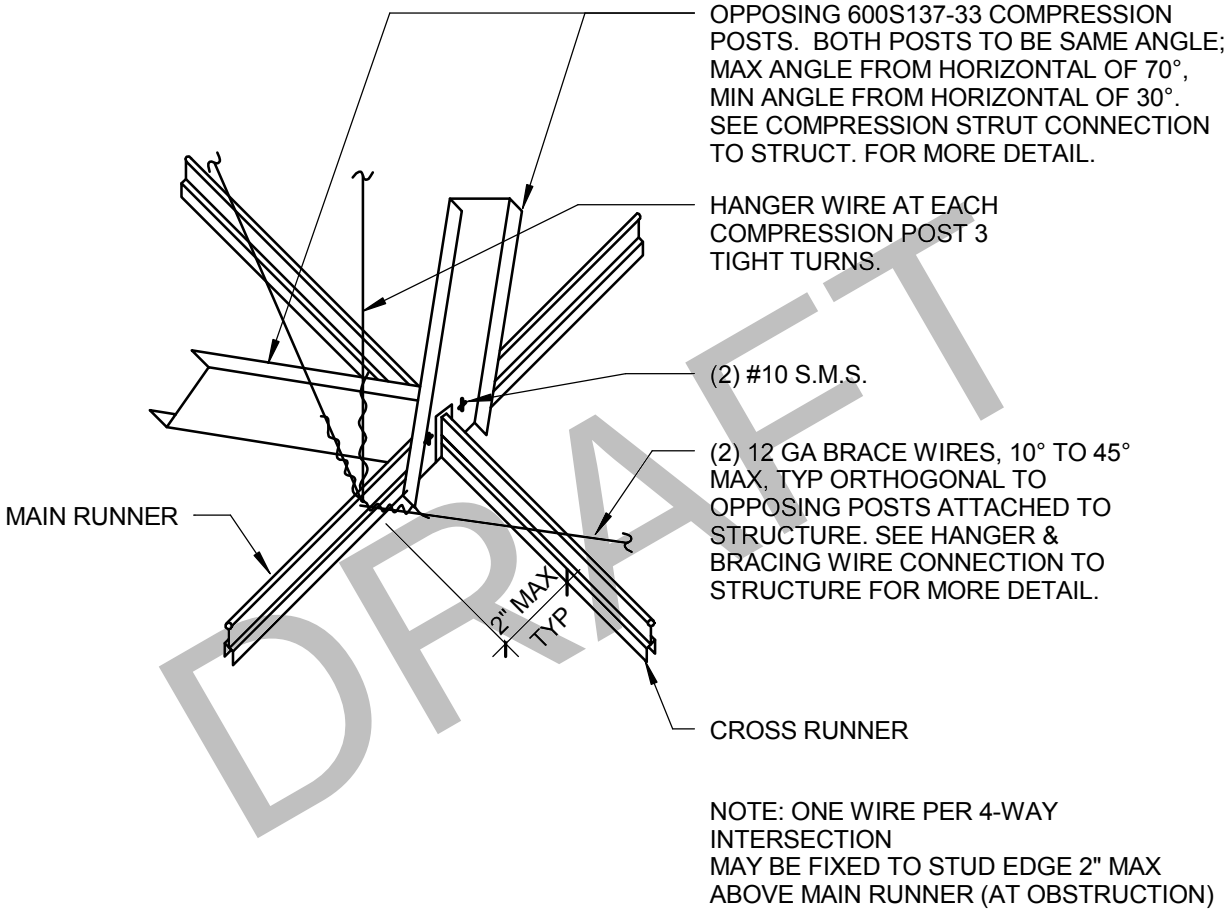

DRAFT

OPPOSING COMPRESSION POST FOR ACOUSTICAL CEILING

Section Title : OSHPD STANDARD SUSPENDED CEILING DETAILS		OPD No:
Sheet Title : OBSTRUCTION-COUNTER SLOPING COMPRESSION STRUTS		CL6.30

Lamb Oxford Comments - Nov. 22. 2013

RC17: Various mnfr's may have a special clip on or attached accessory fascia panel that will all direct attachment; however, this should be part of the ceiling system. If a project is not using a smaller wall angle via an approved AMC, then this horizontal lip must be min. 2 inches.

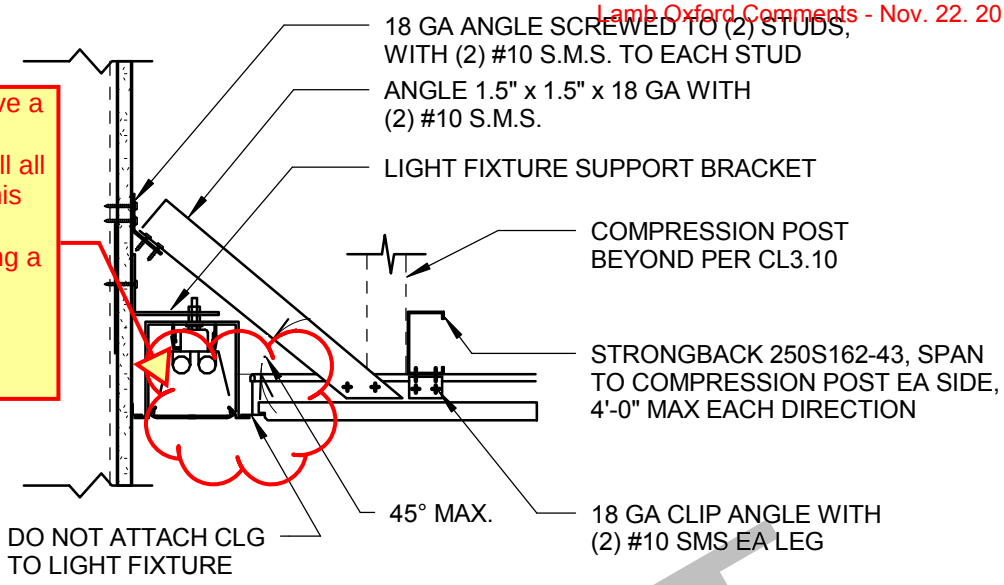

LOCATIONS WITHOUT CROSS JOISTS

DRAFT

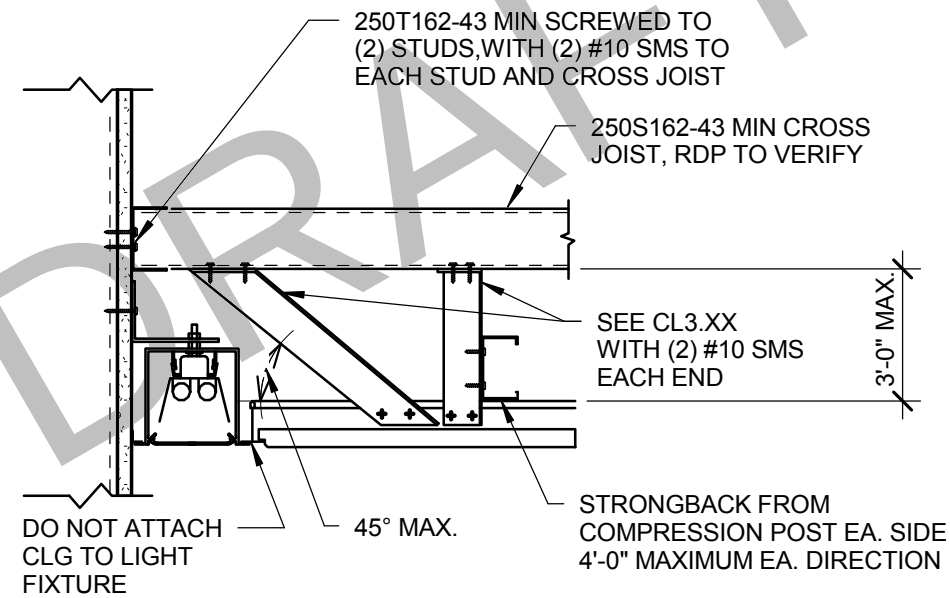

LOCATIONS WITH CROSS JOISTS

NOTES:
1. RDP SHALL DESIGN CROSS JOIST, STRONGBACK, COMPRESSION POST AND SUPPORTING WALL

2. DETAILS IN THIS PAGE ARE ONLY PERMITTED AT THE FIXED END OF THE CEILING AND ARE NOT PERMITTED AT THE EXPANSION JOINT

Section Title : OSHPD STANDARD SUSPENDED CEILING DETAILS	OPD No:
Sheet Title : OBSTRUCTION-RECESSED LIGHT AT PERIMETER	CL6.40

Lamb Oxford Comments - Nov. 22. 2013

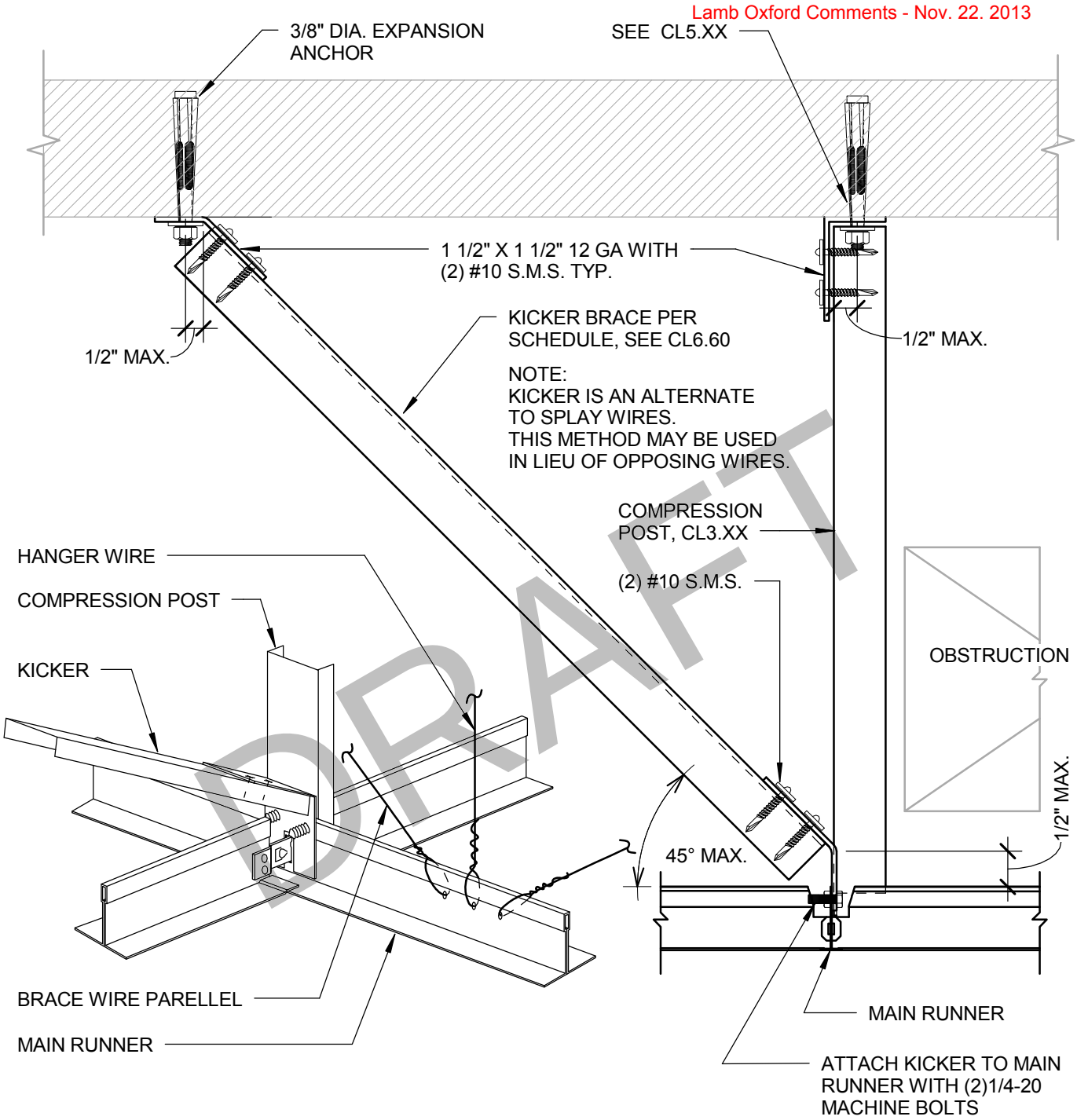

DRAFT

ISOMETRIC VIEW **SIDE VIEW**

T-BAR CEILING - WIRE OBSTRUCTION DETAIL W/ STUD KICKER, LESS BRACING WIRES, TO DECK.

Section Title : OSHPD STANDARD SUSPENDED CEILING DETAILS		OPD No:
Sheet Title : OBSTRUCTION-STUD BRACE TO OVERHEAD		CL6.50

Lamb Oxford Comments - Nov. 22. 2013

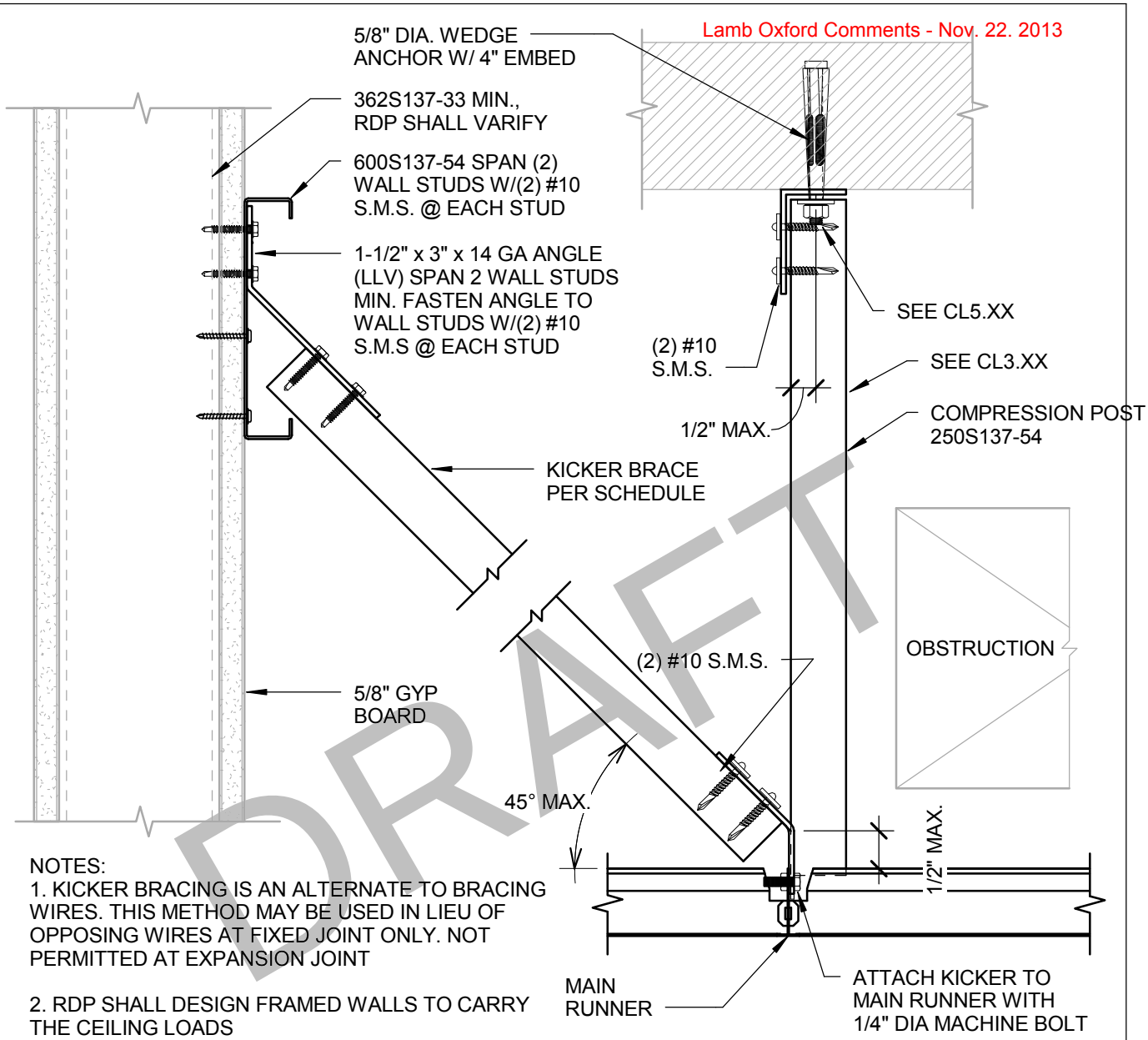

DRAFT

NOTES:
1. KICKER BRACING IS AN ALTERNATE TO BRACING WIRES. THIS METHOD MAY BE USED IN LIEU OF OPPOSING WIRES AT FIXED JOINT ONLY. NOT PERMITTED AT EXPANSION JOINT

2. RDP SHALL DESIGN FRAMED WALLS TO CARRY THE CEILING LOADS

KICKER SCHEDULE			
	SPAN	MATERIAL	SSMA
≤	4'-0"	18 GA	250S137-43
≤	8'-0"	18 GA	400S162-43
≤	14'-0"	16 GA	400S162-54

SIDE VIEW

T-BAR CEILING - WIRE OBSTRUCTION DETAIL W/ STUD KICKER, LESS BRACING WIRES, TO WALL

Section Title : OSHPD STANDARD SUSPENDED CEILING DETAILS	OPD No:
Sheet Title : OBSTRUCTION-STUD BRACE TO WALL	CL6.60

Please send comments to the following email address:

OPD@oshpd.ca.gov

Please reference the OPD number when submitting comments

2/18/2014 8:13:58 AM

2013 CBC FIRE-RESISTIVE STANDARD DETAILS

Issue Date : 02/18/2014	
Revision :	Date :

2/18/2014 8:14:14 AM

DRAWING INDEX	REVISIONS

FRX DRAWINGS INDEX, NARRATIVE AND FLOWCHARTS

FRX.00	DRAWING INDEX
FRX.01	DRAWING INDEX
FRX.10	NARRATIVE
FRX.11	NARRATIVE (CONT'D)
FRX.20	APPLICATION FLOWCHART – DEFINE PROJECT PARAMETERS AND APPLICABILITY
FRX.21	APPLICATION FLOWCHART – SELECT APPROPRIATE DETAILS FROM OPD
FRX.22	APPLICATION FLOWCHART – 1-HOUR RATED PARTITIONS, WALLS OR BARRIERS
FRX.23	APPLICATION FLOWCHART – 2-HOUR RATED PARTITIONS, WALLS OR BARRIERS
FRX.24	APPLICATION FLOWCHART – RATED WALL PENETRATIONS
FRX.25	RATED FLOOR/CEILING PENETRATIONS

FR0 GENERAL NOTES

FR0.00	GENERAL NOTES
FR0.01	GENERAL NOTES (CONT'D)
FR0.02	GRAPHICS LEGEND

FR1 INTERSECTION DETAILS FOR ONE-HOUR FIRE RESISITIVE PARTITIONS, WALLS AND BARRIERS

FR1.00	BASIC JOINT DETAILS FOR 1-HR-FR RATED WALL ASSEMBLIES - COMPOSITE
FR1.01	BASIC JOINT DETAILS FOR 1-HR-FR RATED WALL ASSEMBLIES - FACE JOINT
FR1.02	BASIC JOINT DETAILS FOR 1-HR-FR RATED WALL ASSEMBLIES - END JOINT
FR1.10	INTERSECTION OF 1-HR-FR PARTITION, WALL AND BARRIER AT PROTECTED COLUMN
FR1.11	INTERSECTION OF 1-HR-FR PARTITION, WALL AND BARRIER AT PROTECTED COLUMN
FR1.12	INTERSECTION OF 1-HR-FR PARTITION, WALL AND BARRIER AT PROTECTED COLUMN
FR1.13	INTERSECTION OF 1-HR-FR PARTITION, WALL AND BARRIER AT PROTECTED COLUMN
FR1.14	INTERSECTION OF 1-HR-FR PARTITION, WALL AND BARRIER AT PROTECTED COLUMN
FR1.15	INTERSECTION OF 1-HR-FR PARTITION, WALL AND BARRIER AT PROTECTED COLUMN
FR1.16	INTERSECTION OF 1-HR-FR PARTITION, WALL AND BARRIER AT PROTECTED COLUMN
FR1.17	INTERSECTION OF 1-HR-FR PARTITION, WALL AND BARRIER AT PROTECTED COLUMN
FR1.33	RATED INTERIOR WALL TERMINATION @ EXTERIOR WALL
FR1.34	RATED INTERIOR WALL TERMINATION @ EXTERIOR WALL
FR1.35	PARTITION TERMINATION @ GLAZING
FR1.36	PARTITION TERMINATION @ GLAZING
FR1.37	PARTITION TERMINATION @ STRUCTURAL MULLION
FR1.38	PARTITION TERMINATION @ STRUCTURAL MULLION - WRAPPED
FR1.39	PARTITION TERMINATION TO PRECAST
FR1.40	SHAFTWALL TERMINATION TO PRECAST

FR2 INTERSECTION DETAILS FOR TWO-HOUR FIRE RESISITIVE PARTITIONS, WALLS AND BARRIERS

FR2.00	BASIC JOINT DETAILS FOR 2-HR-FR RATED WALL ASSEMBLIES - COMPOSITE
FR2.01	BASIC JOINT DETAILS FOR 2-HR-FR RATED WALL ASSEMBLIES - FACE JOINT
FR2.02	BASIC JOINT DETAILS FOR 2-HR-FR RATED WALL ASSEMBLIES - END JOINT
FR2.10	INTERSECTION OF 2-HR-FR PARTITION, WALL AND BARRIER AT PROTECTED COLUMN
FR2.11	INTERSECTION OF 2-HR-FR PARTITION, WALL AND BARRIER AT PROTECTED COLUMN
FR2.12	INTERSECTION OF 2-HR-FR PARTITION, WALL AND BARRIER AT PROTECTED COLUMN
FR2.13	INTERSECTION OF 2-HR-FR PARTITION, WALL AND BARRIER AT PROTECTED COLUMN
FR2.14	INTERSECTION OF 2-HR-FR PARTITION, WALL AND BARRIER AT PROTECTED COLUMN
FR2.15	INTERSECTION OF 2-HR-FR PARTITION, WALL AND BARRIER AT PROTECTED COLUMN
FR2.16	INTERSECTION OF 2-HR-FR PARTITION, WALL AND BARRIER AT PROTECTED COLUMN
FR2.17	INTERSECTION OF 2-HR-FR PARTITION, WALL AND BARRIER AT PROTECTED COLUMN

Section Title : OSHPD FIRE RESISTIVE STANDARD DETAILS

OPD No: FRX.00

Sheet Title : DRAWING INDEX 1 OF 2

2/18/2014 8:24:45 AM

DRAWING INDEX		REVISIONS
FR3	**PENETRATION DETAILS FOR FIRE RESISTIVE RATED GYPSUM BOARD ASSEMBLIES**	
FR3.00	NOT USED	
FR3.01	RECESSED M.E.P. CABINET IN RATED PARTITION	
FR3.02	HOLLOW METAL DOOR FRAME AT 1-HOUR RATED WALL	
FR3.03	HOLLOW METAL DOOR FRAME AT 2-HOUR RATED WALL	
FR3.04	RATED WALL CONTROL JOINT DETAILS	
FR3.05	RATED WALL CONTROL JOINT DETAILS	
FR3.06	RATED WALL BLOW-OUT PATCH AT PENETRATIONS	
FR3.07	PENETRATION REPAIR AT TOP OF WALL	
FR3.08	SHAFTWALL AT INTERMEDIATE BEAM	
FR4	**PENETRATIONS DETAILS FOR OF RATED FLOOR/CEILING ASSEMBLIES**	
FR4.00	NOT USED	
FR4.01	FLOOR SLAB PENETRATION AT WATER CLOSET WASTE LINE	
FR4.02	VERTICAL DUCT SHAFT BOTTOM DETAILS	

Section Title : OSHPD FIRE RESISTIVE STANDARD DETAILS

OPD No:

Sheet Title :
DRAWING INDEX 2 OF 2

FRX.01

NARRATIVE

2013 California Building Code (2013 CBC) Fire Resistive Details document contains OSHPD Pre-Approved Details (OPD), which may be incorporated into construction documents. These details have been reviewed for compliance with the 2013 CBC and, when used as shown, without modifications, are deemed to comply with code. They are intended to cover common conditions that occur on many projects. It is anticipated that use of these details will facilitate the design, review, and construction process.

The Narrative and supporting Flowchart, which follows the Narrative, are provided to assist in selecting applicable details from the OPD for incorporation into the construction documents. It is to be used only as a guide and does not provide complete step-by-step instructions for use of the OPD. Narrative comment numbers correspond to the numbered items on the Flowchart.

The following steps apply to use of OPD:

1.Define Project Parameters

A .Construction Classification by Type of Construction.

i. The Registered Design Professional (RDP) in responsible charge shall identify the minimum requirements for the fire resistance ratings of building elements, based on the provisions of Chapter 6 of the CBC.

B. Coordination with Primary Structural Elements.

i. The RDP in responsible charge shall identify with the Structural Engineer of Record (SEOR) the primary structural elements and the methods for providing the required fire protection in compliance with CBC Table 601.

ii. The RDP in responsible charge shall identify and coordinate the project conditions where primary structural elements and architectural and MEP systems may be in conflict.

C.Coordination of Non-structural Building Elements.

i. The RDP in responsible charge shall identify the non-structural building elements to be constructed and their compliance to the requirements of Chapter 7, *Fire and Smoke Protection Features,* of the CBC, for the specific use within the project.

ii. The RDP in responsible charge shall identify the unique conditions which apply to the use of the OPD under consideration.

2. Verify Applicability of the OPD
(refer to PIN 51)

A. The OPD's allow design professionals to incorporate pre-approved details into their project construction documents when they satisfy the following conditions.

i. The RDP in responsible charge determines the applicability of the OPD for the specific project conditions, and the project specific details for those conditions may not otherwise be met by tested and listed assemblies of the manufacturer's products specified.

ii. The OPD details must be directly applicable to the project conditions, without modification.

Section Title : OSHPD FIRE RESISTIVE STANDARD DETAILS			OPD No:
Sheet Title : NARRATIVE - PAGE 1 OF 3			FRX.10

B. Substitutions of items shown in the OPD are not permitted, unless specifically allowed by the OPD itself.

C. Changes to the OPD to accommodate variations of the project conditions are not permitted. In such cases, project specific details are required.

2. Verify Applicability of the OPD
(refer to PIN 51)

A. The OPD's allow design professionals to incorporate pre-approved details into their project construction documents when they satisfy the following conditions.

i. The RDP in responsible charge determines the applicability of the OPD for the specific project conditions, and the project specific details for those conditions may not otherwise be met by tested and listed assemblies of the manufacturer's products specified.

ii. The OPD details must be directly applicable to the project conditions, without modification.

B. Substitutions of items shown in the OPD are not permitted, unless specifically allowed by the OPD itself.

C. Changes to the OPD to accommodate variations of the project conditions are not permitted. In such cases, project specific details are required.

3. Select Appropriate Details from OPD

A. Review the OPD General Notes before the start of the OPD selection process. The General Notes provide detailed specifications of the materials and the workmanship associated with the details. The RDP in responsible charge shall confirm the applicability of the OPD details and the specifications noted in this section.

B. The protection of primary structural elements of the project shall not be compromised. Details indicating connections of miscellaneous framing to primary steel shall have protective construction (i.e. spray fireproofing) replaced as acceptable to manufacturer and OSHPD.

C. Non-structural partitions of fire resistive construction shall comply with approved tested assemblies, listed by accepted testing agencies.

D. Select the type of condition which the detail needs to address – intersection of fire-resistive assemblies or penetrations of fire resistive assemblies.

E. For Intersections of fire-resistive assemblies, select the applicable fire-resistive rating for the partition components of the detail.

i. One-hour fire resistive details begin with sheet FR1.00, and Two-hour fire resistive details begin with sheet FR2.00.
ii. Select the condition for the type of intersection – intersections with protected columns begin with detail FR1.10 or FR2.10; intersections with rated floor/roof decks begin with FR1.20 and FR2.20; intersections with exterior wall construction begin with FR1.30 and FR2.30.
iii. Select the appropriate detail based on the particular detail condition, e.g. column orientation, adjacent wall construction, etc.

Section Title : OSHPD FIRE RESISTIVE STANDARD DETAILS			OPD No:
Sheet Title : NARRATIVE - PAGE 2 OF 3			FRX.11

F. For Penetrations of fire-resistive assemblies, select the type of components to be detailed.

i. Select details by type of component penetrating rated assembly, e.g. shaft enclosure, ductwork, piping, fixture, etc.
ii. Select detail appropriate to the specific field condition.

4. Implementation and Use of OPD During Plan Review

Refer to PIN 51.

5. Implementation and Use of OPD During Construction Process

Refer to PIN 51.

A. During construction, OPD's are treated as any other detail in the approved documents.

B. Pre-approved details submitted after the construction documents have been approved and a building permit has been issued shall be used and/or processed in accordance with Code Application Notice 2 -107.4 "Amended Construction Documents." Pre-approved details may be applied as alternates to the approved details shown on the permitted construction documents only on a one for one basis and with written consents of the registered design professional and the registered design professional in responsible charge and in concurrence incorporated without any modification. Pre-approved details are subject to field confirmation during which the applicability of pre-approved details for specific project conditions shall be evaluated.

C. Changing the scope of a project (adding additional space to the construction area or modifying the spaces of the original design, for example) does constitute a "material alteration" to the project, even if OPD can be used for all conditions. In such a case, an Amended Construction Document must be submitted to OSHPD field staff for review.

Section Title : OSHPD FIRE RESISTIVE STANDARD DETAILS			OPD No:
Sheet Title : NARRATIVE - PAGE 3 OF 3			FRX.12

2/18/2014 8:14:15 AM

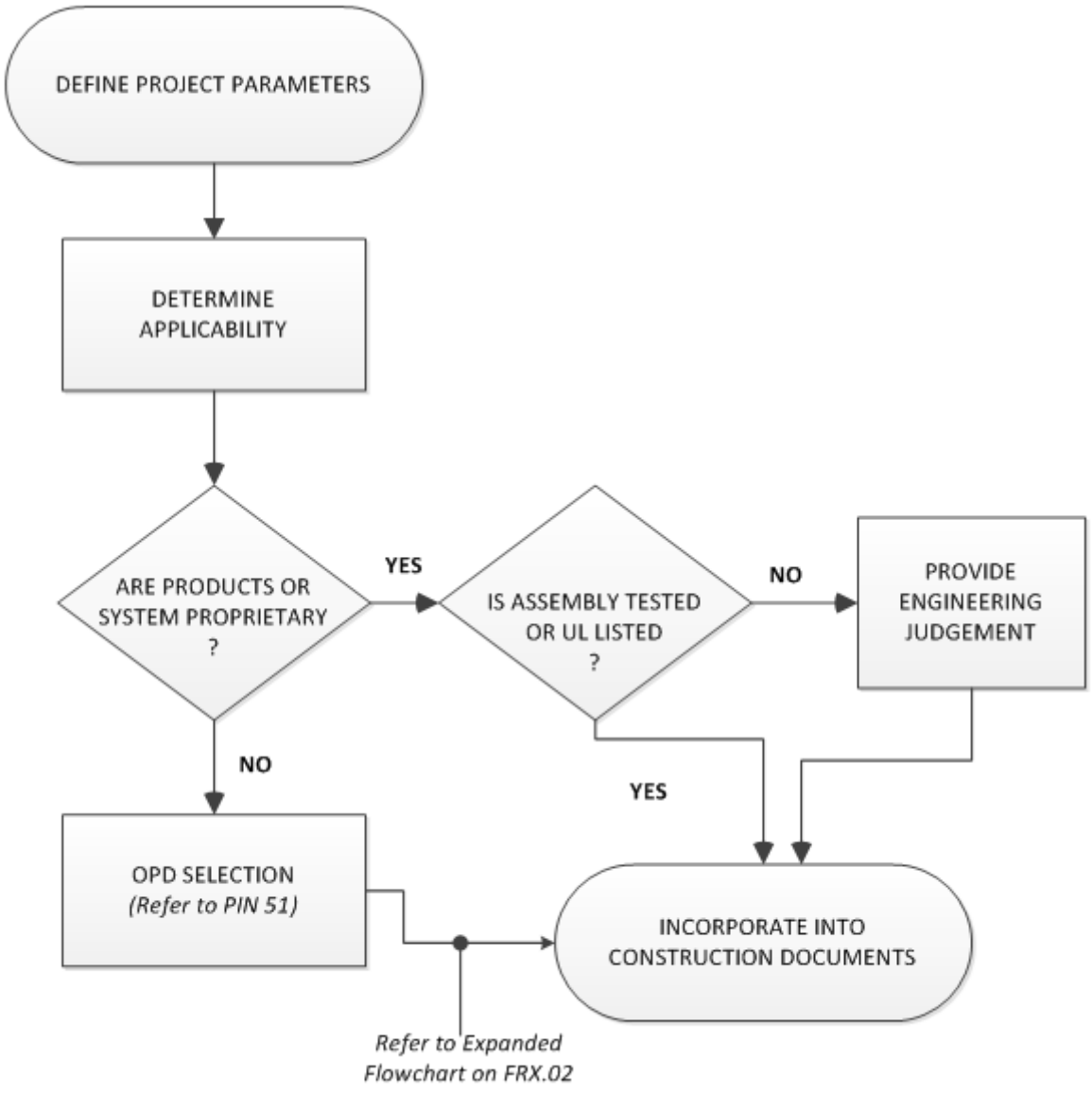

Section Title : OSHPD FIRE RESISTIVE STANDARD DETAILS	OPD No:
Sheet Title : APPLICATION FLOWCHART - OVERVIEW OF OPD USE	FRX.20

2/18/2014 8:14:15 AM

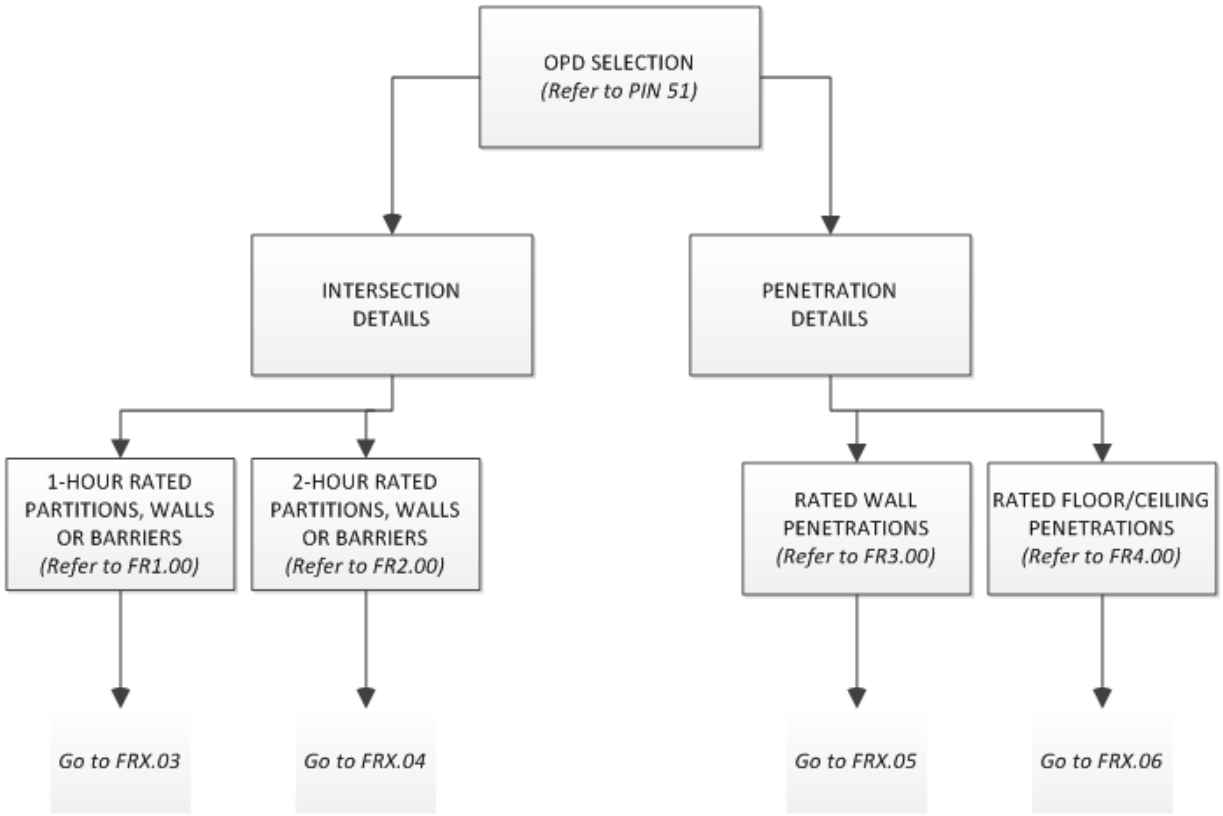

Section Title : OSHPD FIRE RESISTIVE STANDARD DETAILS	OPD No:
Sheet Title : APPLICATION FLOWCHART - OPD SELECTION	FRX.21

2/18/2014 8:14:15 AM

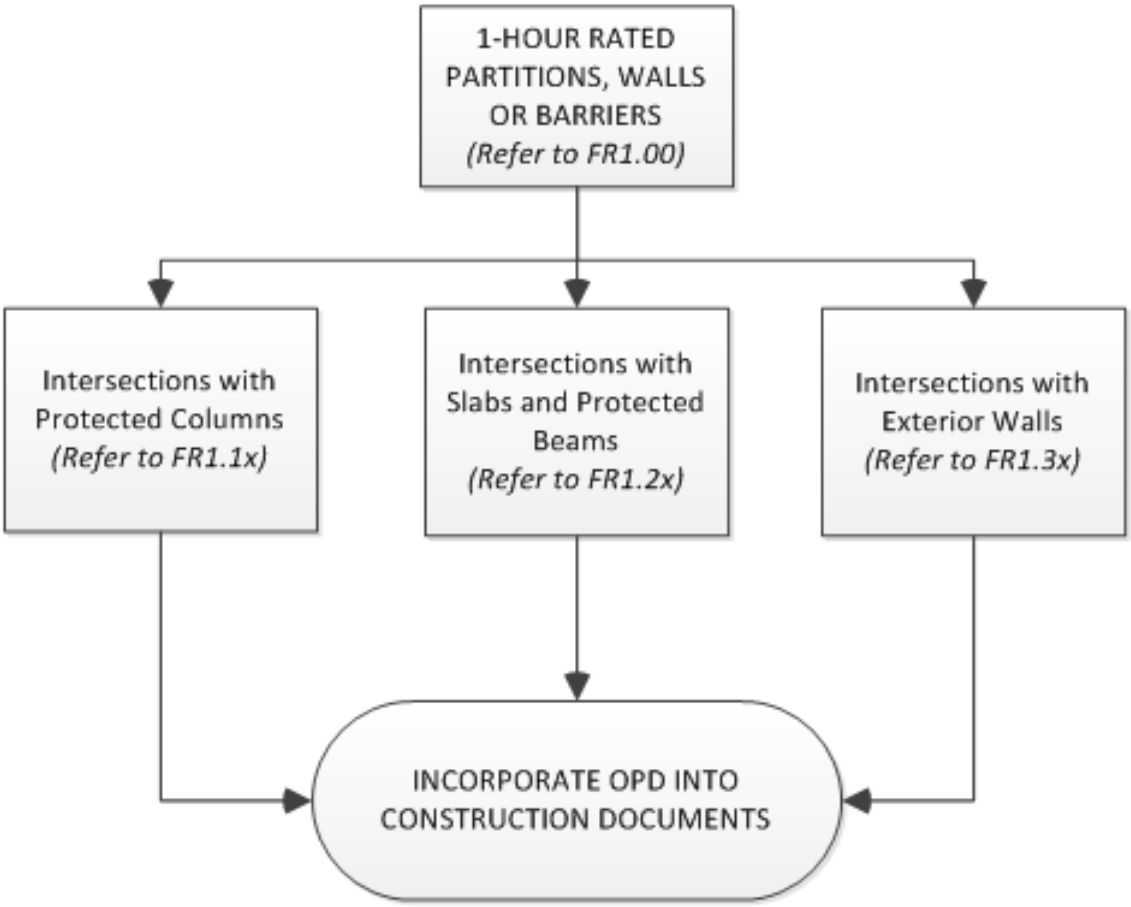

Section Title : OSHPD FIRE RESISTIVE STANDARD DETAILS	OPD No:
Sheet Title : APPLICATION FLOWCHART - RATED PARTITIONS, WALLS, AND BARRIERS	FRX.22

2/18/2014 8:14:16 AM

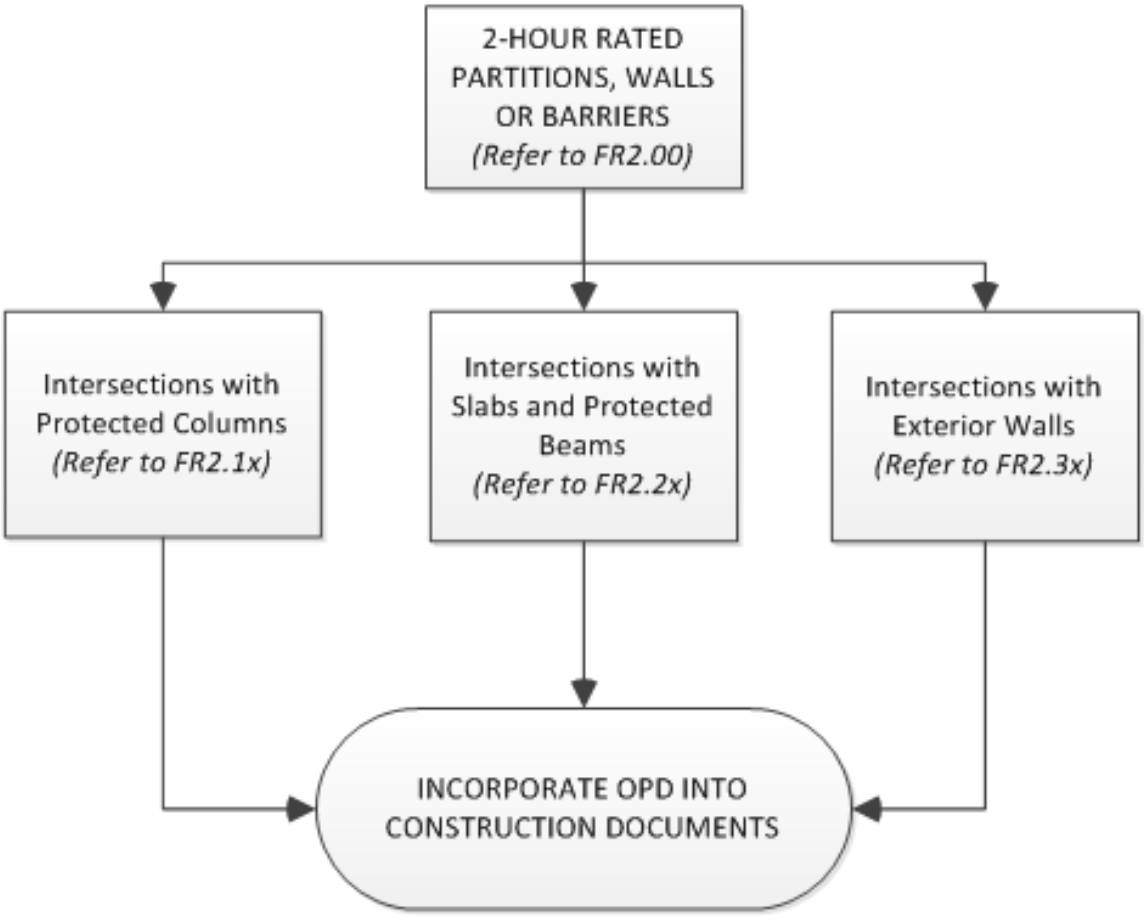

Section Title : OSHPD FIRE RESISTIVE STANDARD DETAILS			OPD No:
Sheet Title : APPLICATION FLOWCHART - RATED PARTIONS, WALLS, AND BARRIERS			FRX.23

2/18/2014 8:14:16 AM

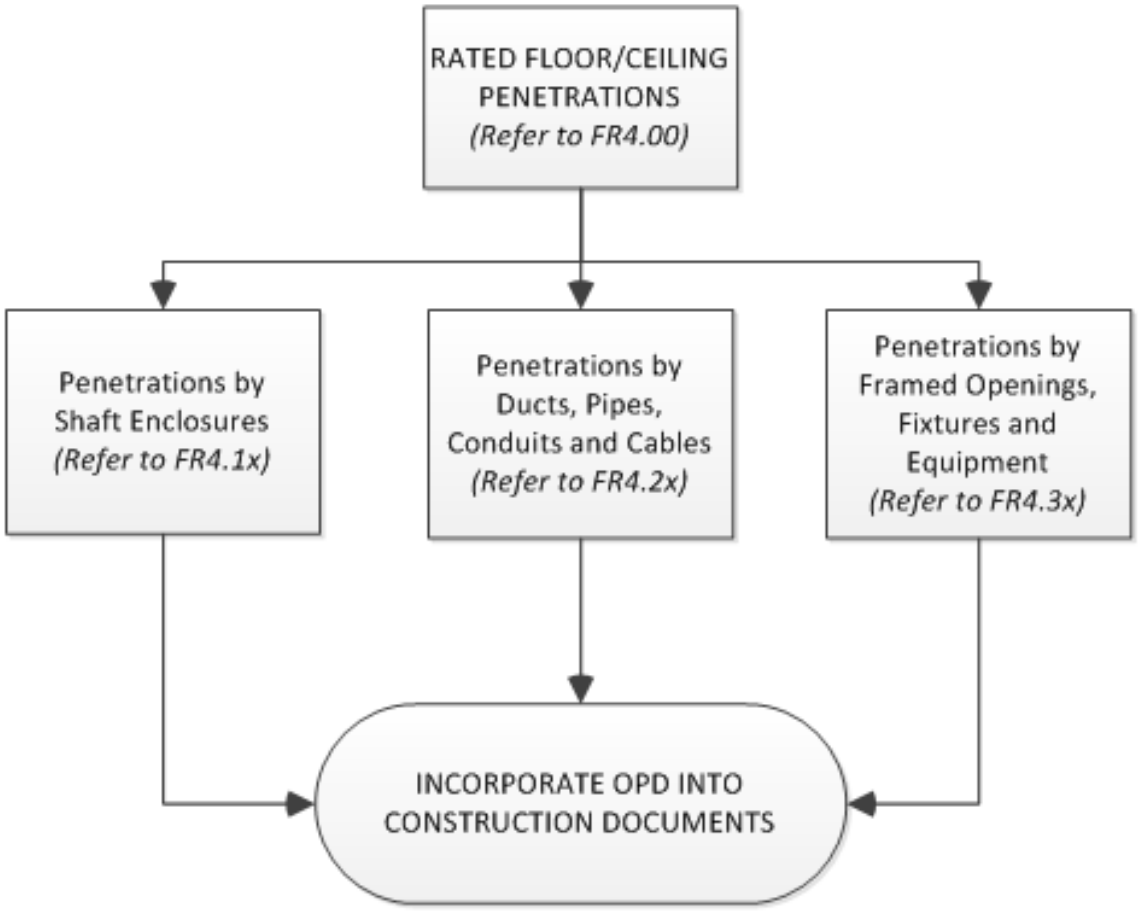

Section Title : OSHPD FIRE RESISTIVE STANDARD DETAILS	OPD No:
Sheet Title : APPLICATION FLOWCHART - RATED CEILING DETAILS	FRX.24

2/18/2014 8:14:16 AM

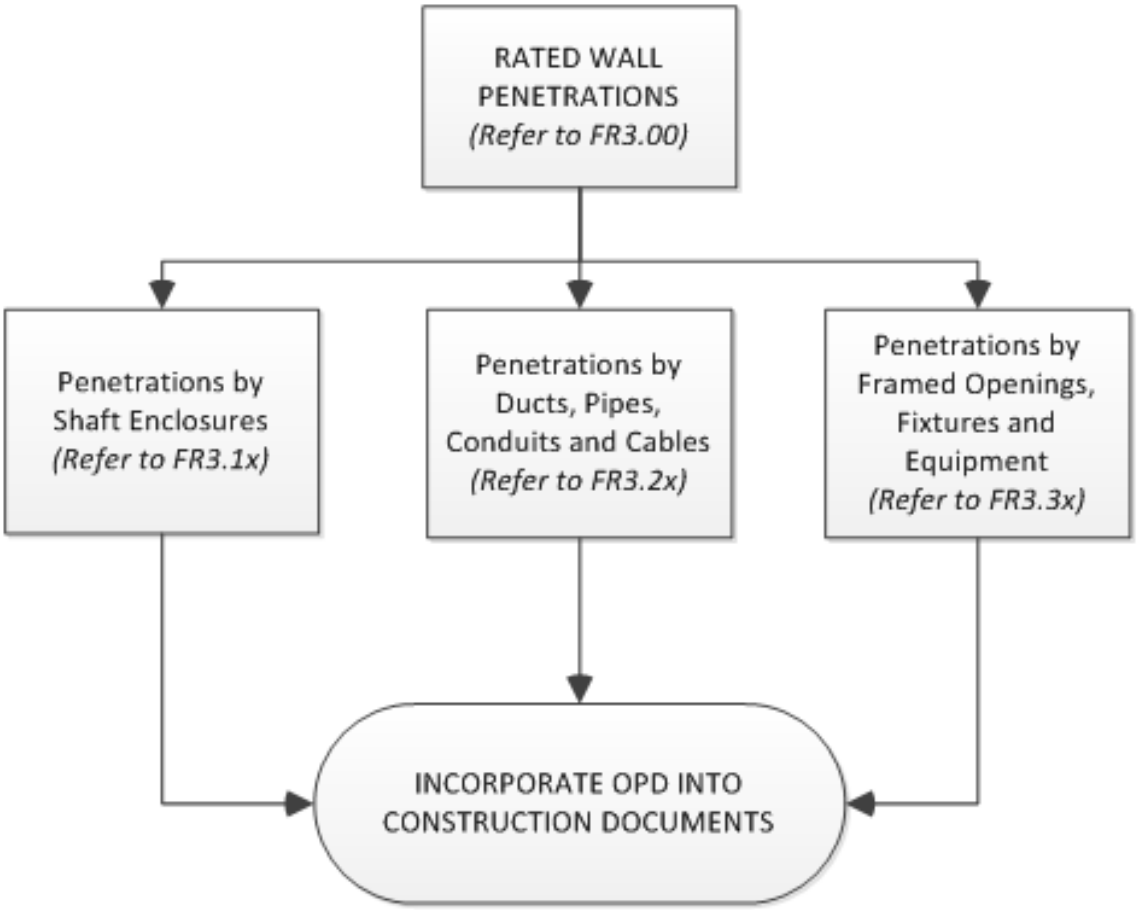

Section Title : OSHPD FIRE RESISTIVE STANDARD DETAILS	OPD No:
Sheet Title : APPLICATION FLOWCHART - RATED PENETRATIONS	FRX.25

2/18/2014 8:13:58 AM

GENERAL NOTES

1. CONSTRUCTION, WORKMANSHIP AND MATERIAL SHALL CONFORM TO THE 2013 CALIFORNIA BUILDING CODE (CBC 2013).

2. THE CONTRACTOR SHALL NOTIFY OSHPD AND THE REGISTERED DESIGN PROFESSIONL (RDP) IN RESPONSIBLE CHARGE WHERE A CONFLICT OR DISCREPANCY OCCURS BETWEEN THE CONSTUCTION DRAWINGS AND ANY OTHER PORTION OF THE CONTRACT DOCUMENTS, FIELD CONDITIONS, OR WHERE ANY CONDITIONS ARISE NOT COVERED BY THESE DOCUMENTS WHEREIN WORK WILL NOT COMPY WITH CODE REQUIREMENTS.

3. THE INTENT OF THE DRAWINGS AND SPECIFICATIONS IS TO CONSTRUCT THE HOSPITAL BUILDING IN ACCORDANCE WITH THE CALIFORNIA BUILDING STANDARD CODE, 2013 (CBSC 2013). SHOULD ANY CONDITION DEVELOP NOT COVERED BY THE APPROVED CONSTRUCTION DOCUMENTS WHEREIN THE WORK WILL NOT COMPLY WITH CBSC 2013, A CHANGE ORDER DETAILING AND SPECIFYING THE REQUIRED WORK SHALL BE SUBMITTED TO AND APPROVED BY OSHPD BEFORE PROCEEDING WITH THE WORK.

4. THE FIRE-RESISTANCE RATING OF BUILDING ELEMENTS, COMPONENT OR ASSEMBLIES SHALL BE DETERMINED IN ACCORDANCE WITH ASTM E 119 OR UL 263 OR IN ACCORDANCE WITH CBC SECTION 703.3.

5. WHERE FIRE RESISTIVE PARTITIONS, WALLS AND BARRIERS ARE CONSTRUCTED OF GYPSUM BOARD TO MEET THE FIRE AND SMOKE PROTECTION FEATURES IN ACCORDANCE WITH CBC CHAPTER 7, THEY SHALL MEET THE REQUIREMENTS OF THE FOLLOWING:

   i. THE DOCUMENTED REQUIREMENTS OF TESTING AND LISTING AGENCIES FOR MANUFACTURER'S PROPRIETARY MATERIALS AND CONSTRUCTION METHODS AS SHOWN IN THE TEST REPORT – E.G. UNDERWRITERS LABORATORIES, INTERTEK'S WARNOCK-HERSEY, ETC., OR

   ii. THE GENERIC FILE NUMBERS OF WALLS AND INTERIOR PARTITIONS DOCUMENTED IN THE GYPSUM ASSOCIATION'S PUBLICATION, "FIRE RESISTANCE DESIGN MANUAL, OR

   iii. HE GENERIC CONSTRUCTION ITEMS LISTED IN CBC TABLE 720.1(2) FOR WALLS AND PARTITIONS.

6. WHERE STRUCTURAL MEMBERS ARE PROTECTED WITH SPRAYED FIRE-RESISTANT MATERIALS (SFRM) THEY SHALL MEET THE FIRE RESISTANCE RATING REQUIREMENTS OF SECTION 704 OF THE CBC AND THE FOLLOWING:

   i. THE DOCUMENTED REQUIREMENTS OF TESTING AND LISTING AGENCIES FOR MANUFACTURER'S PROPRIETARY MATERIALS AND CONSTRUCTION METHODS AS SHOWN IN THE TEST REPORT – E.G. UNDERWRITERS LABORATORIES, INTERTEK'S WARNOCK-HERSEY, ETC.

7. WHERE STRUCTURAL MEMBERS ARE PROTECTED WITH OTHER NON-COMBUSTIBLE INSULATING MATERIALS, THEY SHALL MEET THE FIRE RESISTANCE RATING REQUIREMENTS OF SECTION 704 OF THE CBC AND THE FOLLOWING:

   i. THE GENERIC CONSTRUCTION ITEMS LISTED IN CBC TABLE 720.1(1) FOR MINIMUM PROTECTION OF STRUCTURAL PARTS.

Section Title : OSHPD FIRE RESISTIVE STANDARD DETAILS			OPD No:
Sheet Title : GENERAL NOTES PAGE 1 OF 2			FR0.00

2/18/2014 8:13:58 AM

8. STRUCTURAL DECKS SHALL BE CONSTRUCTED TO MEET THE REQUIREMENTS OF RATED HORIZONTAL ASSEMBLIES IN ACCORDANCE WITH CBC SECTION 712, AND SHALL MEET THE REQUIREMENTS OF THE FOLLOWING:

   i. THE DOCUMENTED REQUIREMENTS OF TESTING AND LISTING AGENCIES FOR MANUFACTURER'S PROPRIETARY MATERIALS AND CONSTRUCTION METHODS AS SHOWN IN THE TEST REPORT – E.G. UNDERWRITERS LABORATORIES, INTERTEK'S WARNOCK-HERSEY, ETC., OR
   ii. THE GENERIC CONSTRUCTION ITEMS LISTED IN CBC TABLE 720.1(3) FOR MINIMUM PROTECTION OF FLOOR AND ROOF SYSTEMS.

9. THE RDP IN RESPONSIBLE CHARGE SHALL VERIFY THAT THE USE OF THE OPD IN PROVIDING AN ACCEPTABLE FIRE RESISTIVE RATING FOR SPECIFIC CONDITIONS, WILL ALSO MEET ANY ACOUSTICAL CRITERIA THAT MAY OTHERWISE BE REQUIRED BY THE PROJECT DESIGN CRITERIA.

10. INDIVIDUAL DETAILS WITHIN THIS OPD TYPICALLY RELY UPON OTHER DETAILS FOR INFORMATION ESSENTIAL TO THEIR APPLICATION. OPD'S ARE TO BE USED IN CONJUNCTION WITH ALL RELATED, APPLICABLE DETAILS WITHIN THIS OPD PACKAGE INCLUDING THE GENERAL NOTES.

11. OPD PROVIDE OPTIONS FOR SOME COMPONENTS, SUCH AS FRAMING MEMBER SIZES, FASTENERS, ETC. THE RDP IN RESPONSIBLE CHARGE SHALL CLEARLY IDENTIFY ALL COMPONENTS SELECTED FOR USE IN THE PROJECT-SPECIFIC CONDITIONS.

Section Title : OSHPD FIRE RESISTIVE STANDARD DETAILS			OPD No:
Sheet Title : GENERAL NOTES PAGE 2 OF 2			FR0.01

2/18/2014 8:13:58 AM

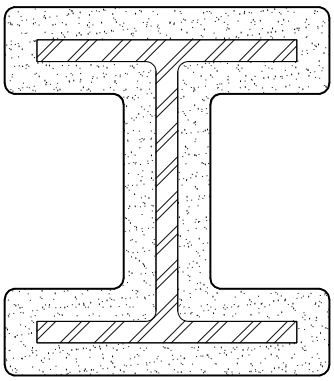

STRUCTURAL STEEL COLUMN W/ SPRAY APPLIED FIREPROOFING. REFER STRUCTURAL DRAWINGS

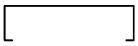

COLD FORMED METAL STUD. REFER ARCHITECTURAL DRAWINGS FOR WALL TYPE.

COLD FORMED SHAFT STUD. REFER ARCHITECTURAL DRAWINGS FOR WALL TYPE.

GYPSUM BOARD. REFER ARCHITECTURAL DRAWINGS FOR WALL TYPE.

COMPRESSED MINERAL WOOL

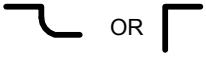

FIRE SEALANT

Section Title : OSHPD FIRE RESISTIVE STANDARD DETAILS		OPD No:
Sheet Title : GRAPHICS LEGEND		FR0.02

2/18/2014 8:13:58 AM

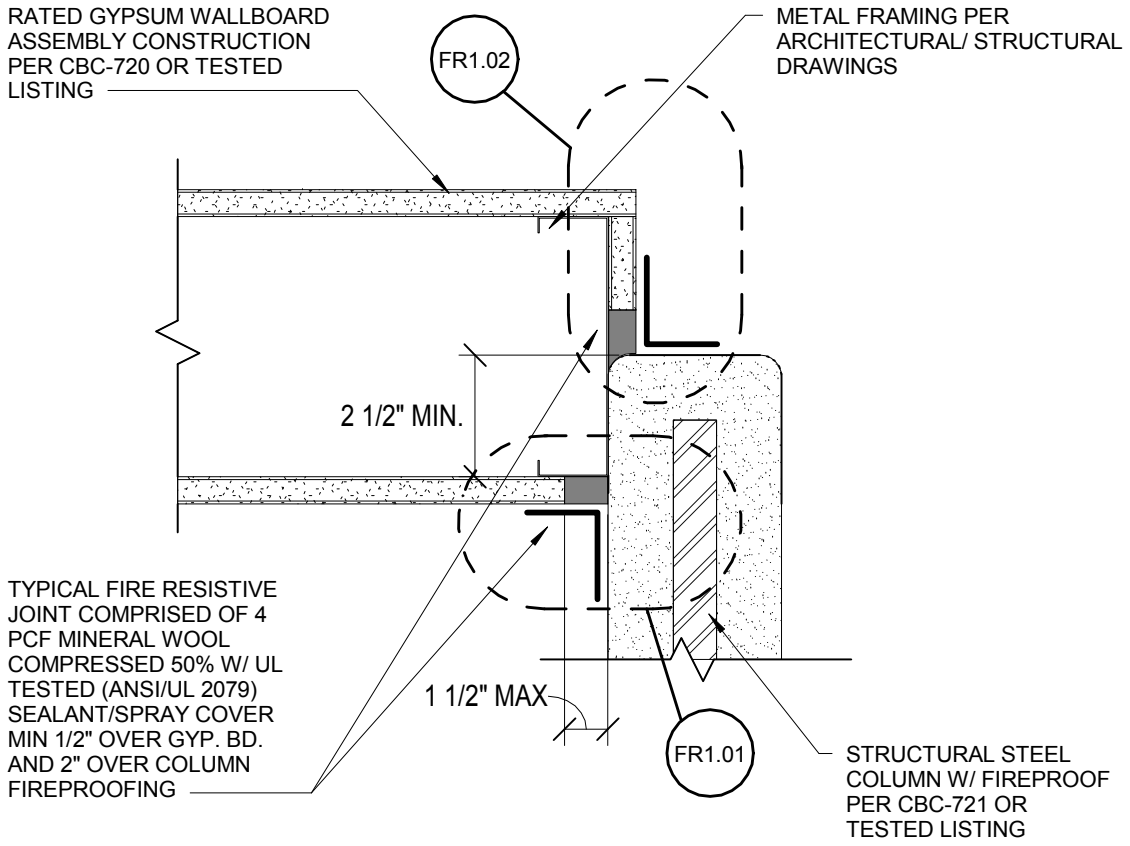

Section Title : OSHPD FIRE RESISTIVE STANDARD DETAILS		OPD No:
Sheet Title : BASIC JOINT DETAIL FOR 1-HR-FR RATED WALL ASSEMBLIES - COMPOSITE @ JOINTS		FR1.00

2/18/2014 8:13:59 AM

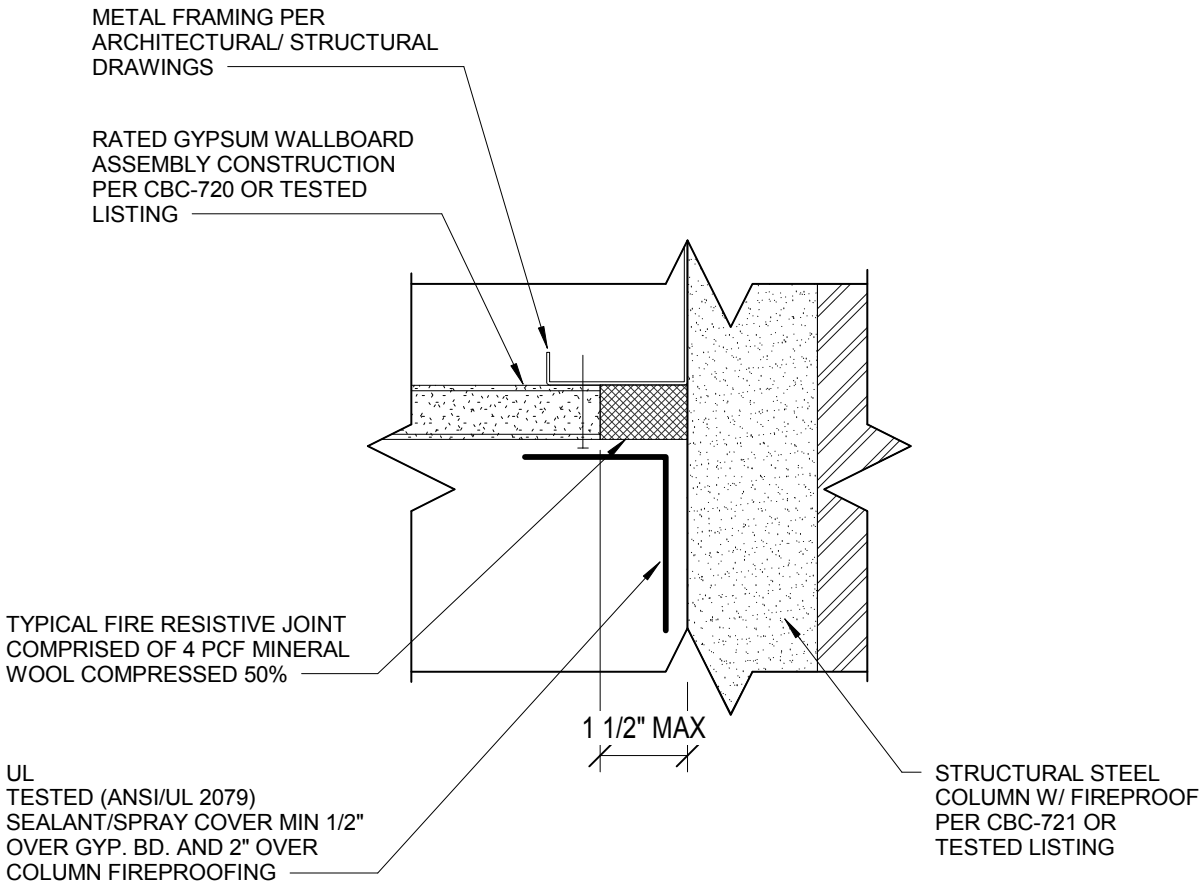

NOTES:
1. MAXIMUM SEPARATION BETWEEN SIDE OF GYPSUM WALLBOARD AND FACE OF FIREPROOFING IS 1 1/2".
2. THE FIRE RESISTIVE RATING OF STEEL COLUMN MUST BE EQUAL OR GREATER THAN WALL RATING.
3. "WET" THICKNESS OF SEALANT TO BE MIN. 1/8" TESTED IN ACCORDANCE WITH ASTM E1966 (ANSI/UL 2079).

Section Title : OSHPD FIRE RESISTIVE STANDARD DETAILS			OPD No:
Sheet Title : BASIC JOINT DETAIL FOR 1-HR-FR RATED WALL ASSEMBLIES - FACE JOINT			FR1.01

2/18/2014 8:13:59 AM

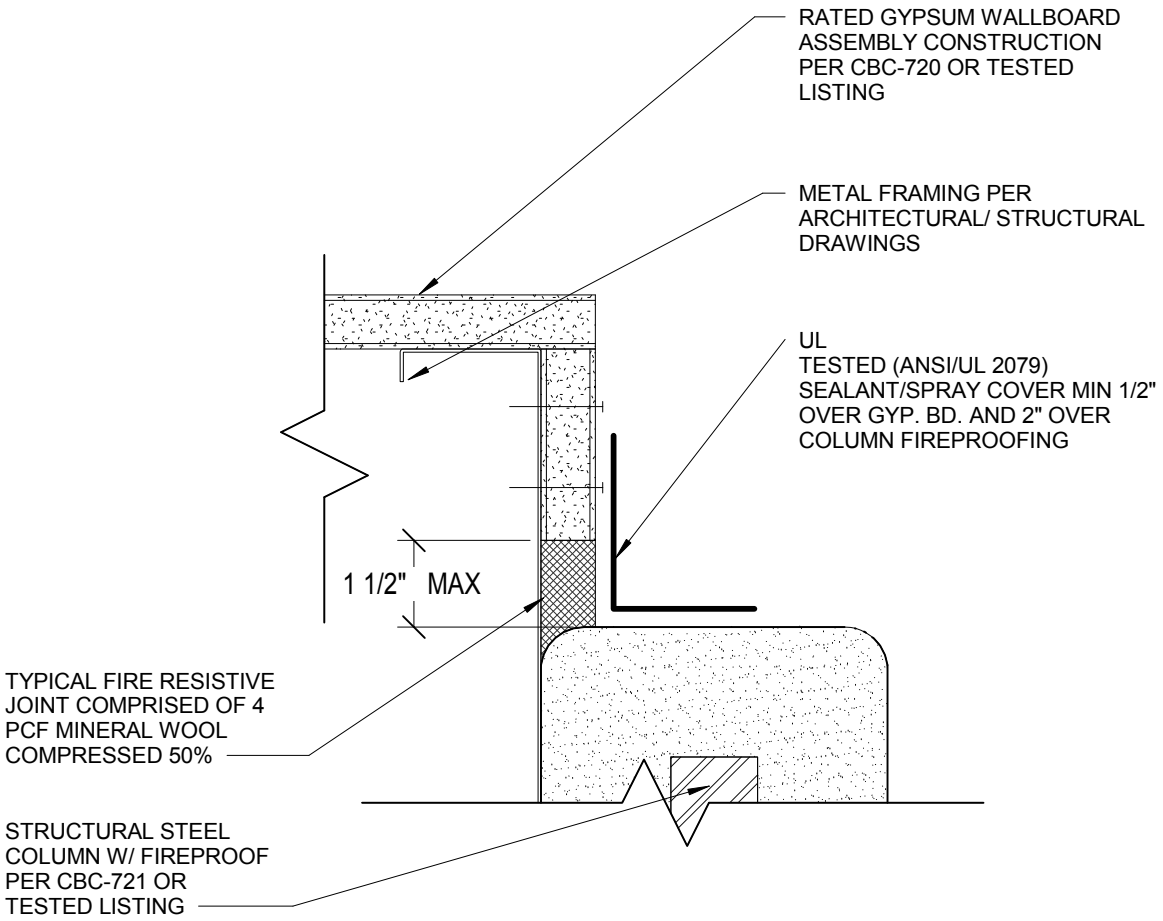

Section Title : OSHPD FIRE RESISTIVE STANDARD DETAILS	OPD No:
Sheet Title : BASIC JOINT DETAIL FOR 1-HR-FR RATED WALL ASSEMBLIES - END JOINT	FR1.02

2/18/2014 8:13:59 AM

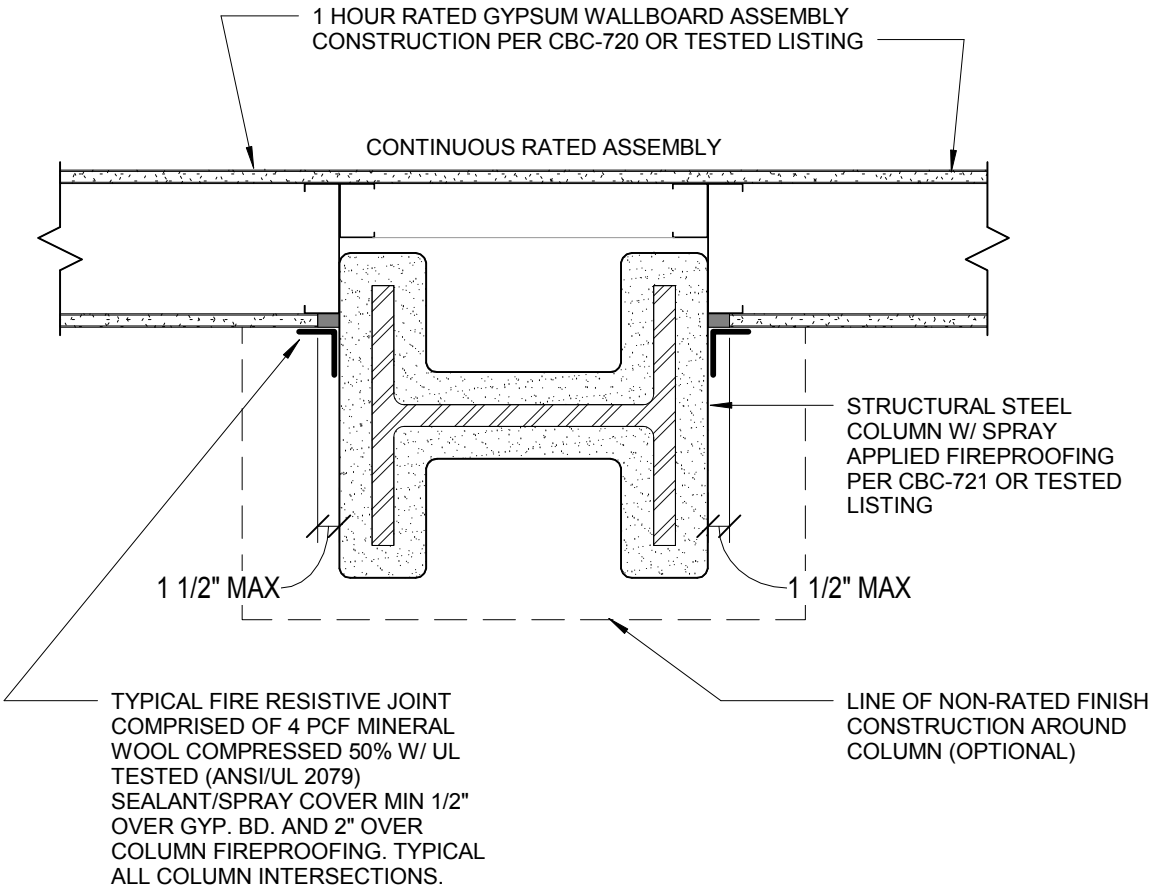

NOTES:
1. MAXIMUM SEPARATION BETWEEN SIDE OF GYPSUM WALLBOARD AND FACE OF FIREPROOFING IS 1 1/2".
2. THE FIRE RESISTIVE RATING OF STEEL COLUMN MUST BE EQUAL OR GREATER THAN WALL RATING.
3. "WET" THICKNESS OF SEALANT TO BE MIN. 1/8" TESTED IN ACCORDANCE WITH ASTM E1966 (ANSI/UL 2079).
4. SEE FR1.00, FR1.01, FR1.02 FOR JOINT DESCRIPTION

Section Title : OSHPD FIRE RESISTIVE STANDARD DETAILS	OPD No:
Sheet Title : INTERSECTION OF 1-HR-FR PARTITION, WALL AND BARRIER AT PROTECTED COLUMN	FR1.10

2/18/2014 8:14:00 AM

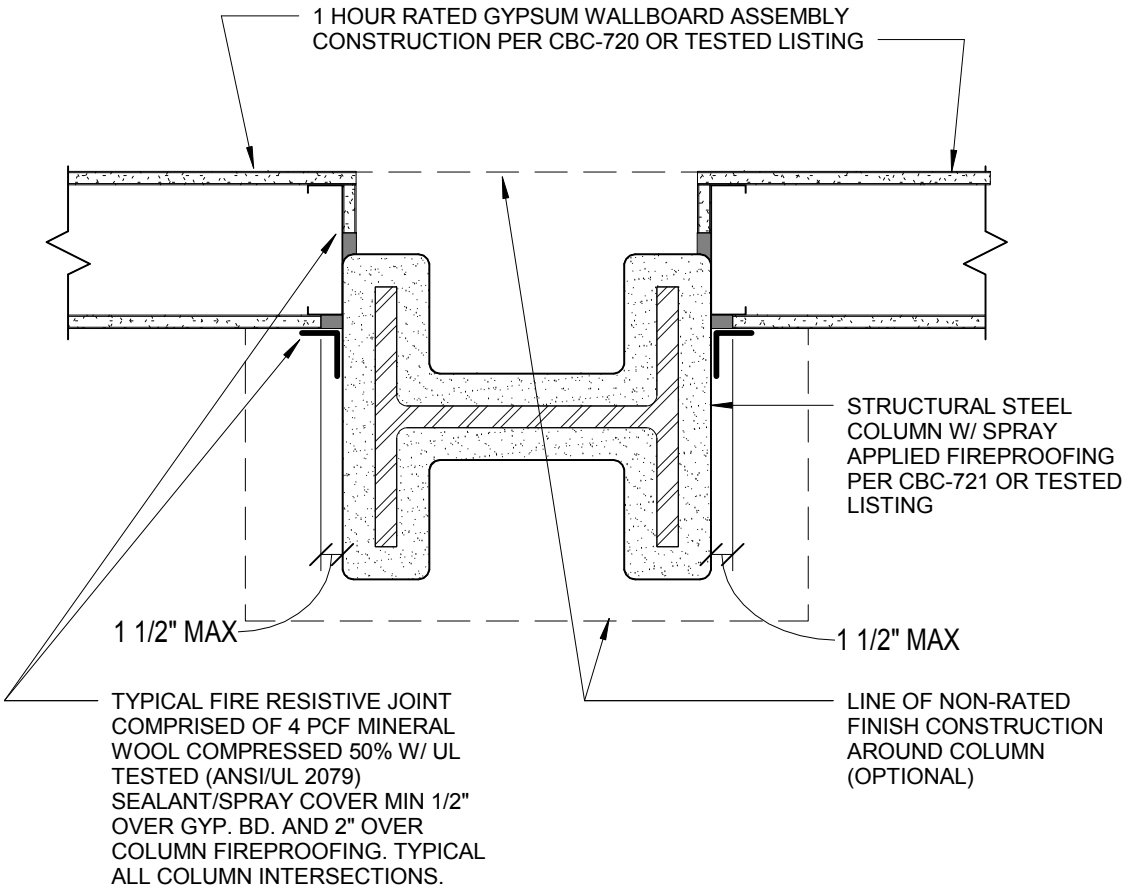

NOTES:
1. MAXIMUM SEPARATION BETWEEN SIDE OF GYPSUM WALLBOARD AND FACE OF FIREPROOFING IS 1 1/2".
2. THE FIRE RESISTIVE RATING OF STEEL COLUMN MUST BE EQUAL OR GREATER THAN WALL RATING.
3. "WET" THICKNESS OF SEALANT TO BE MIN. 1/8" TESTED IN ACCORDANCE WITH ASTM E1966 (ANSI/UL 2079).
4. SEE FR1.00, FR1.01, FR1.02 FOR JOINT DESCRIPTION

Section Title : OSHPD FIRE RESISTIVE STANDARD DETAILS		OPD No:
Sheet Title : INTERSECTION OF 1-HR-FR PARTITION, WALL AND BARRIER AT PROTECTED COLUMN		FR1.11

2/18/2014 8:14:01 AM

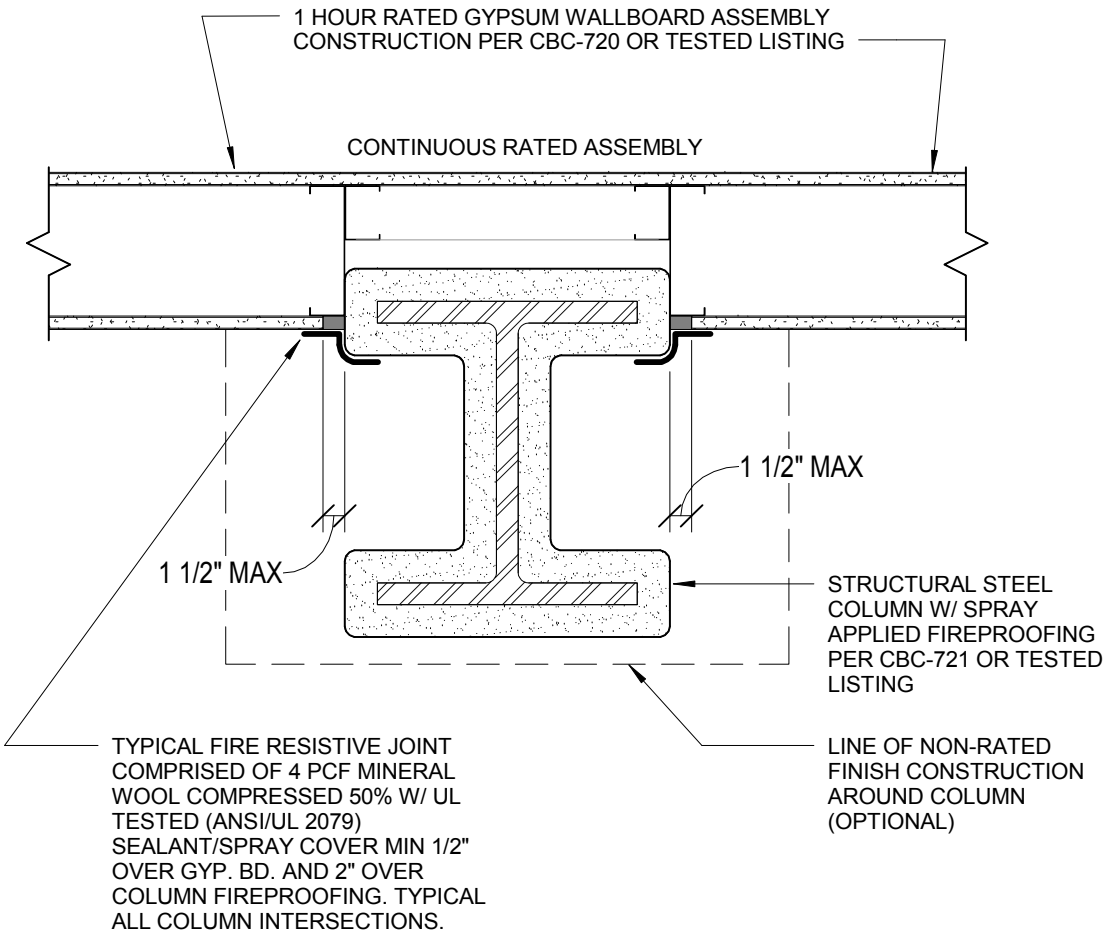

NOTES:
1. MAXIMUM SEPARATION BETWEEN SIDE OF GYPSUM WALLBOARD AND FACE OF FIREPROOFING IS 1 1/2".
2. THE FIRE RESISTIVE RATING OF STEEL COLUMN MUST BE EQUAL OR GREATER THAN WALL RATING.
3. "WET" THICKNESS OF SEALANT TO BE MIN. 1/8" TESTED IN ACCORDANCE WITH ASTM E1966 (ANSI/UL 2079).
4. SEE FR1.00, FR1.01, FR1.02 FOR JOINT DESCRIPTION

Section Title : OSHPD FIRE RESISTIVE STANDARD DETAILS		OPD No:
Sheet Title : INTERSECTION OF 1-HR-FR PARTITION, WALL AND BARRIER AT PROTECTED COLUMN		FR1.12

2/18/2014 8:14:01 AM

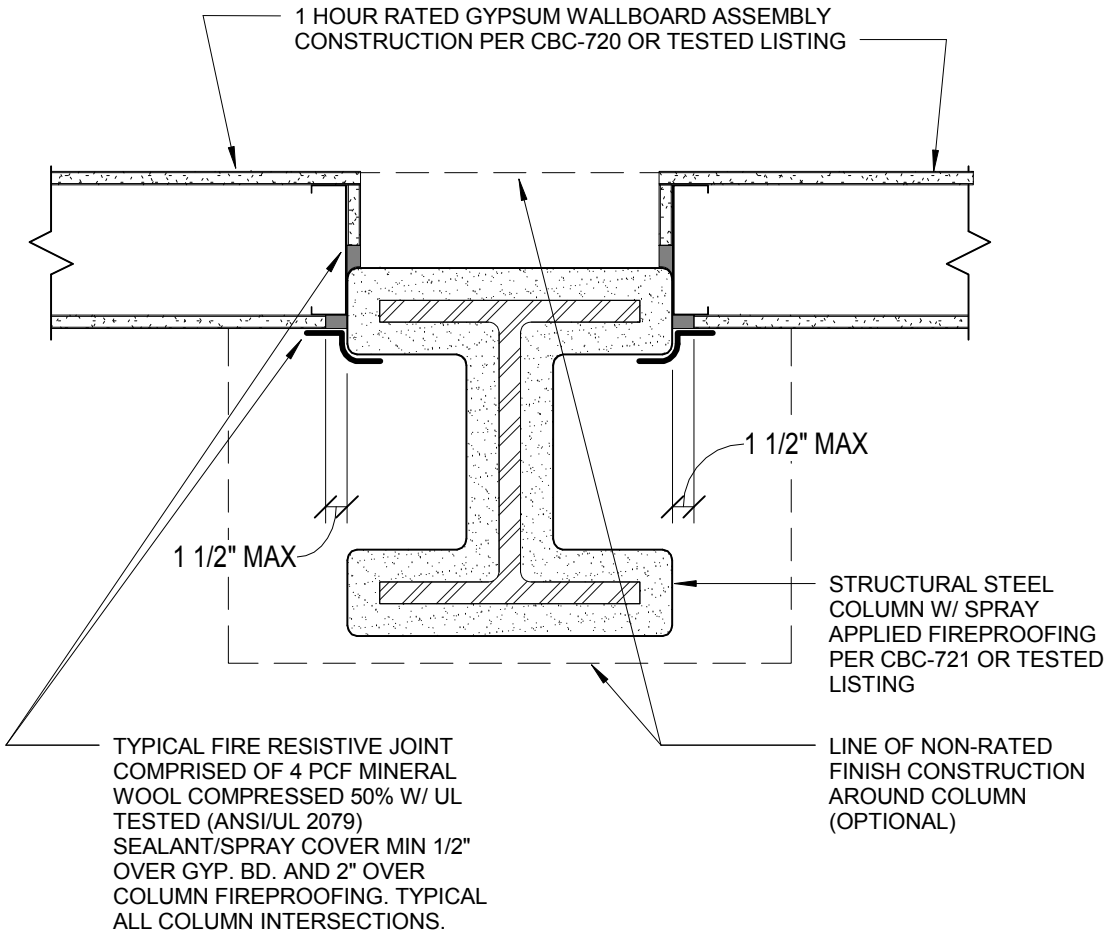

NOTES:
1. MAXIMUM SEPARATION BETWEEN SIDE OF GYPSUM WALLBOARD AND FACE OF FIREPROOFING IS 1 1/2".
2. THE FIRE RESISTIVE RATING OF STEEL COLUMN MUST BE EQUAL OR GREATER THAN WALL RATING.
3. "WET" THICKNESS OF SEALANT TO BE MIN. 1/8" TESTED IN ACCORDANCE WITH ASTM E1966 (ANSI/UL 2079).
4. SEE FR1.00, FR1.01, FR1.02 FOR JOINT DESCRIPTION

Section Title : OSHPD FIRE RESISTIVE STANDARD DETAILS		OPD No:
Sheet Title : INTERSECTION OF 1-HR-FR PARTITION, WALL AND BARRIER AT PROTECTED COLUMN		FR1.13

2/18/2014 8:14:01 AM

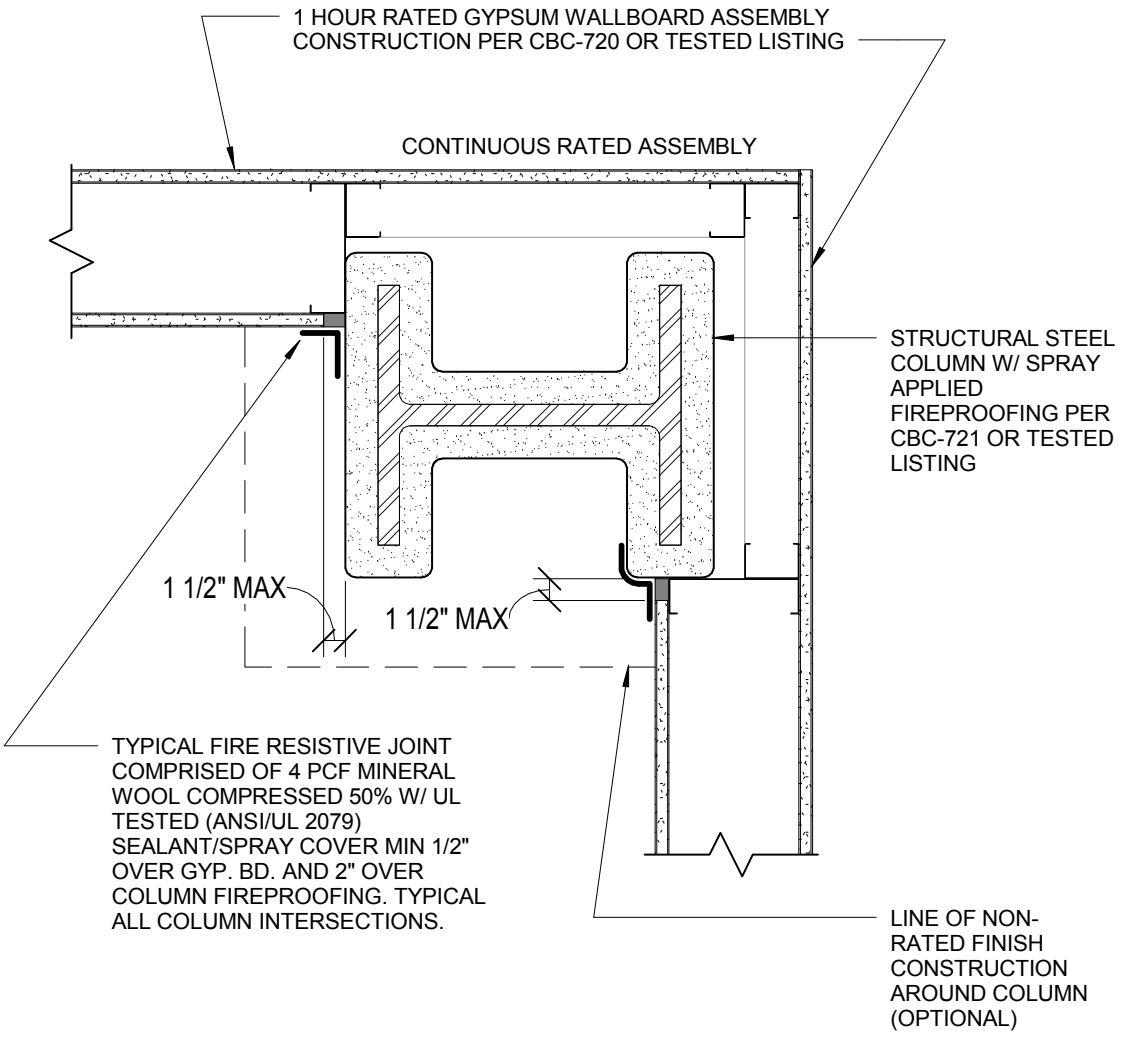

NOTES:
1. MAXIMUM SEPARATION BETWEEN SIDE OF GYPSUM WALLBOARD AND FACE OF FIREPROOFING IS 1 1/2".
2. THE FIRE RESISTIVE RATING OF STEEL COLUMN MUST BE EQUAL OR GREATER THAN WALL RATING.
3. "WET" THICKNESS OF SEALANT TO BE MIN. 1/8" TESTED IN ACCORDANCE WITH ASTM E1966 (ANSI/UL 2079).
4. SEE FR1.00, FR1.01, FR1.02 FOR JOINT DESCRIPTION

Section Title : OSHPD FIRE RESISTIVE STANDARD DETAILS	OPD No:
Sheet Title : INTERSECTION OF 1-HR-FR PARTITION, WALL AND BARRIER AT PROTECTED COLUMN	FR1.14

2/18/2014 8:14:02 AM

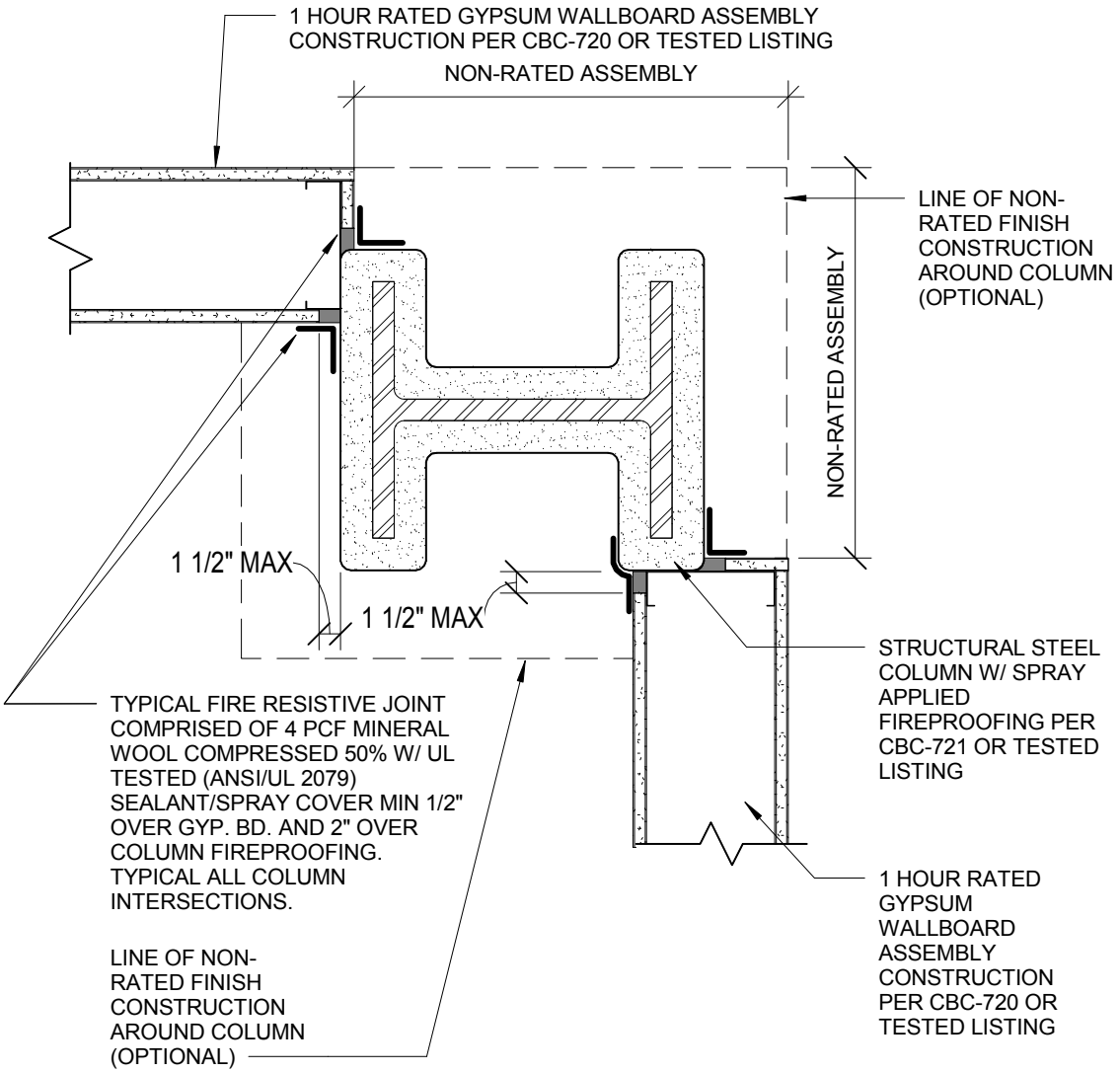

NOTES:
1. MAXIMUM SEPARATION BETWEEN SIDE OF GYPSUM WALLBOARD AND FACE OF FIREPROOFING IS 1 1/2".
2. THE FIRE RESISTIVE RATING OF STEEL COLUMN MUST BE EQUAL OR GREATER THAN WALL RATING.
3. "WET" THICKNESS OF SEALANT TO BE MIN. 1/8" TESTED IN ACCORDANCE WITH ASTM E1966 (ANSI/UL 2079).
4. SEE FR1.00, FR1.01, FR1.02 FOR JOINT DESCRIPTION

Section Title : OSHPD FIRE RESISTIVE STANDARD DETAILS	OPD No:
Sheet Title : INTERSECTION OF 1-HR-FR PARTITION, WALL AND BARRIER AT PROTECTED COLUMN	FR1.15

2/18/2014 8:14:02 AM

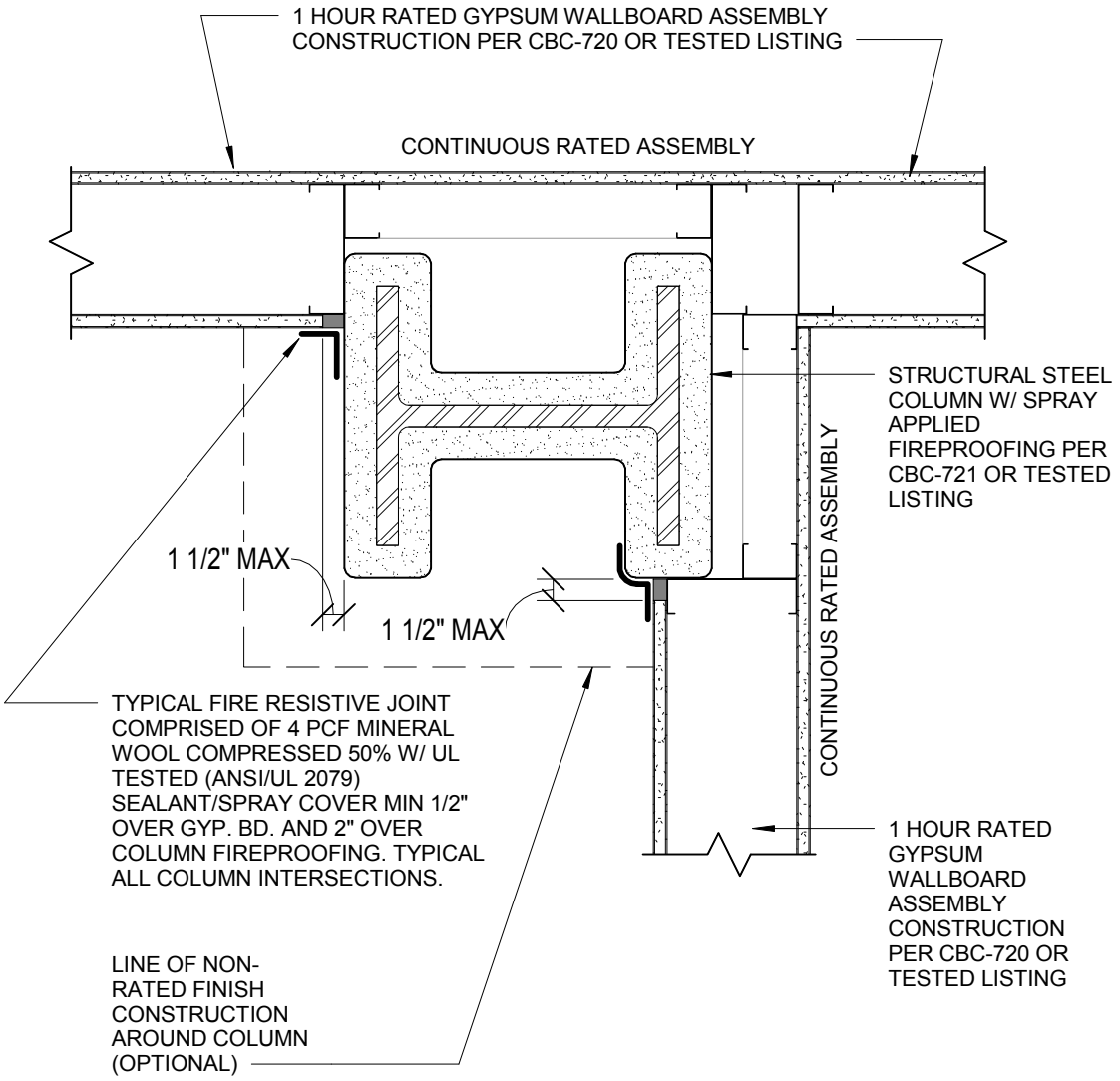

NOTES:
1. MAXIMUM SEPARATION BETWEEN SIDE OF GYPSUM WALLBOARD AND FACE OF FIREPROOFING IS 1 1/2".
2. THE FIRE RESISTIVE RATING OF STEEL COLUMN MUST BE EQUAL OR GREATER THAN WALL RATING.
3. "WET" THICKNESS OF SEALANT TO BE MIN. 1/8" TESTED IN ACCORDANCE WITH ASTM E1966 (ANSI/UL 2079).
4. SEE FR1.00, FR1.01, FR1.02 FOR JOINT DESCRIPTION

Section Title : OSHPD FIRE RESISTIVE STANDARD DETAILS	OPD No:
Sheet Title : INTERSECTION OF 1-HR-FR PARTITION, WALL AND BARRIER AT PROTECTED COLUMN	FR1.16

2/18/2014 8:14:03 AM

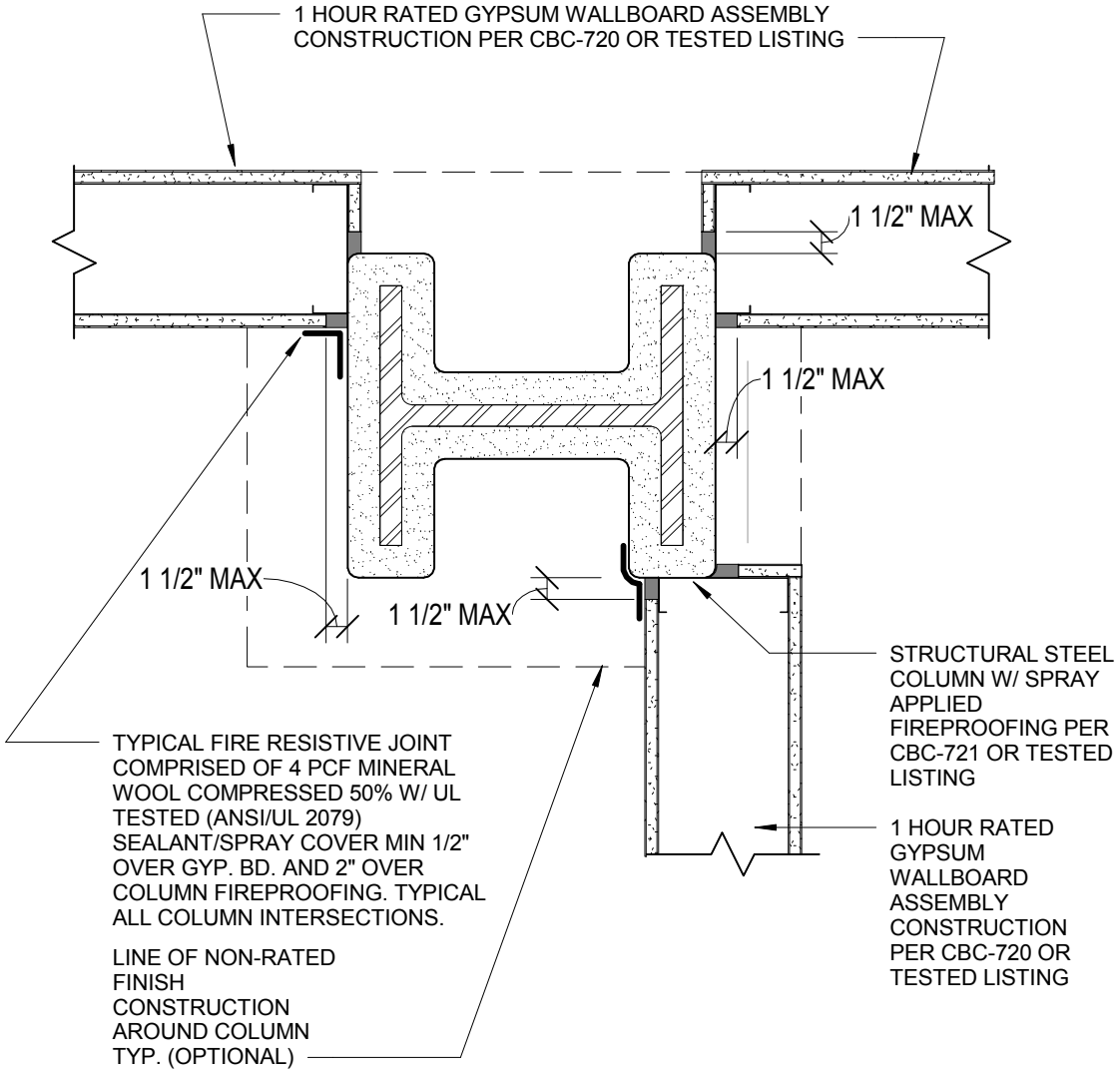

NOTES:
1. MAXIMUM SEPARATION BETWEEN SIDE OF GYPSUM WALLBOARD AND FACE OF FIREPROOFING IS 1 1/2".
2. THE FIRE RESISTIVE RATING OF STEEL COLUMN MUST BE EQUAL OR GREATER THAN WALL RATING.
3. "WET" THICKNESS OF SEALANT TO BE MIN. 1/8" TESTED IN ACCORDANCE WITH ASTM E1966 (ANSI/UL 2079).
4. SEE FR1.00, FR1.01, FR1.02 FOR JOINT DESCRIPTION

Section Title : OSHPD FIRE RESISTIVE STANDARD DETAILS	OPD No:
Sheet Title : INTERSECTION OF 1-HR-FR PARTITION, WALL AND BARRIER AT PROTECTED COLUMN	FR1.17

2/18/2014 8:14:03 AM

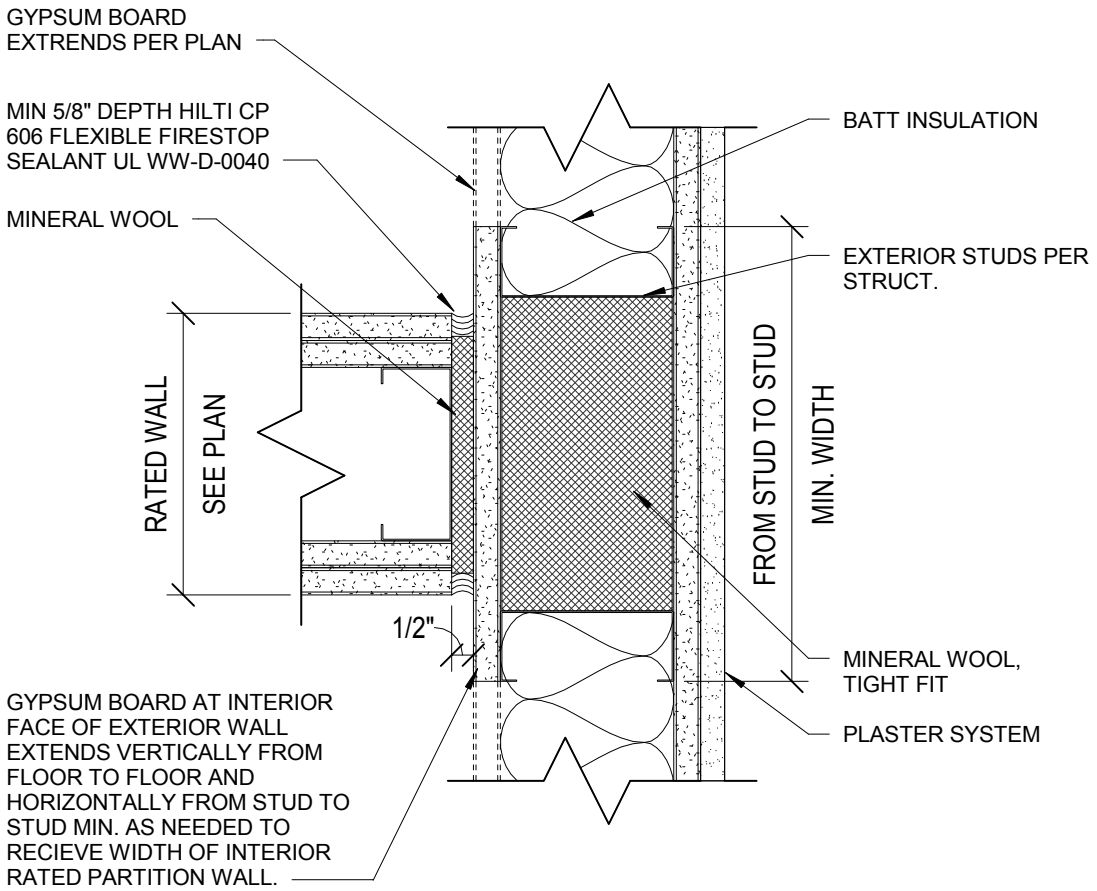

Section Title : OSHPD FIRE RESISTIVE STANDARD DETAILS	OPD No:
Sheet Title : RATED INTERIOR WALL TERMINATION AT EXTERIOR PLASTER WALL	FR1.33

2/18/2014 8:14:03 AM

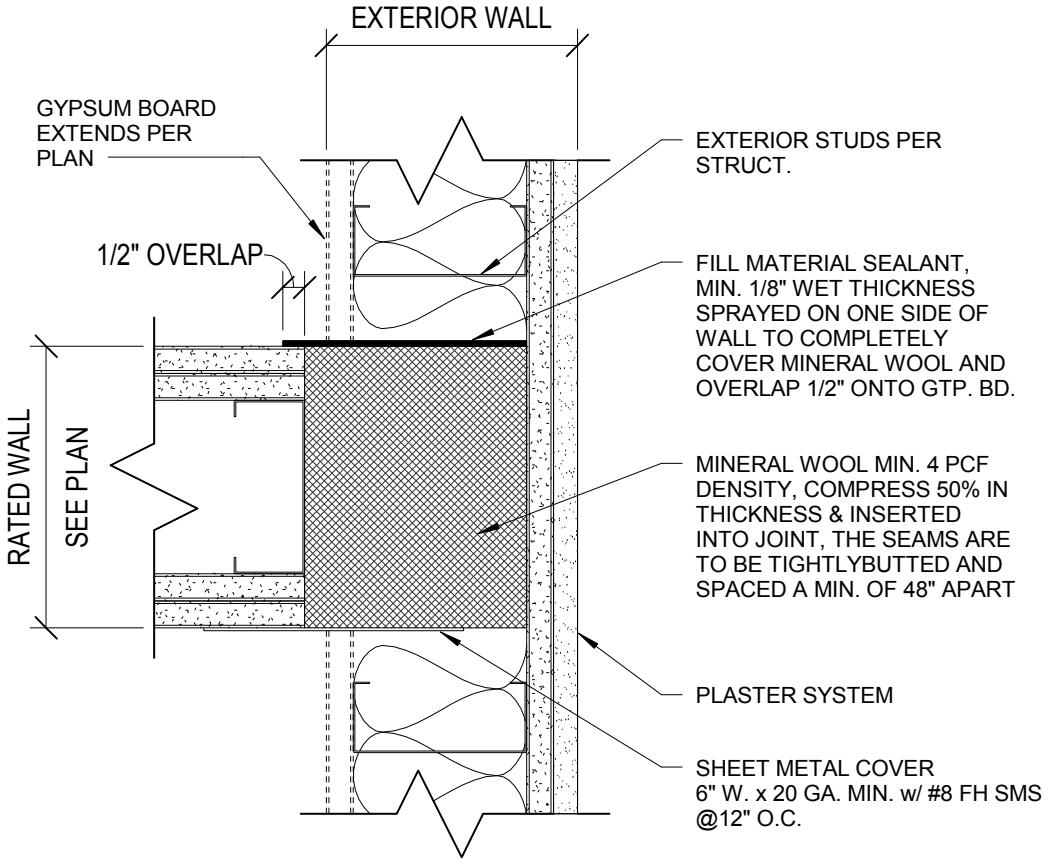

Section Title : OSHPD FIRE RESISTIVE STANDARD DETAILS		OPD No:
Sheet Title : RATED INTERIOR WALL TERMINATION AT EXTERIOR PLASTER WALL		FR1.34

2/18/2014 8:14:03 AM

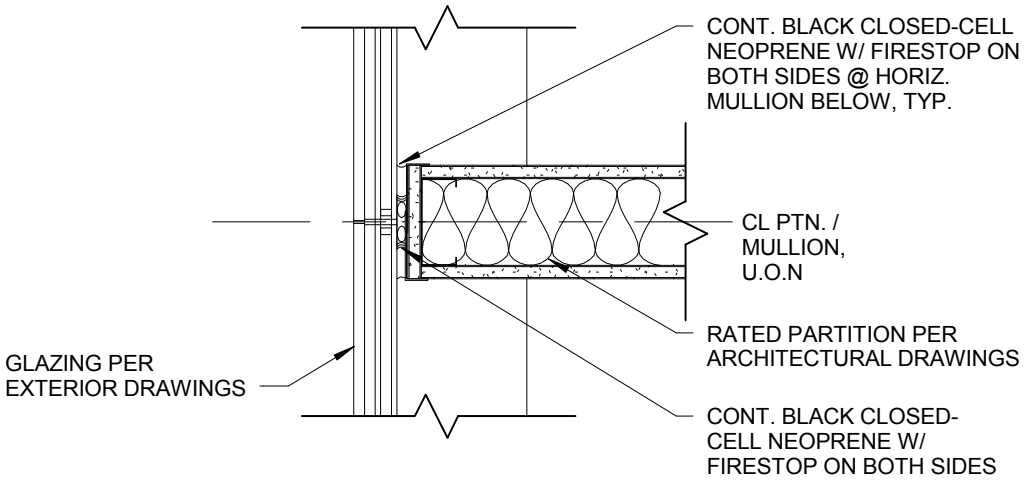

TYP. 1 HR. RATED PTN.

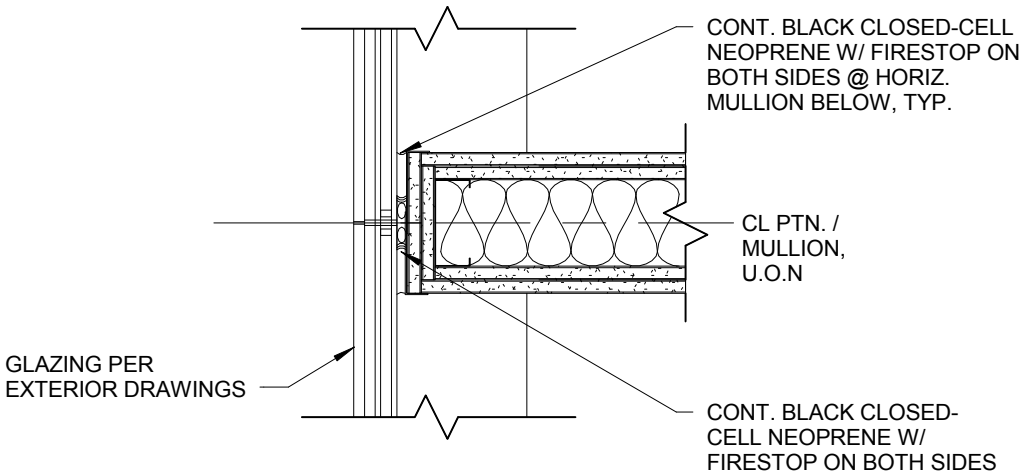

TYP. 2 HR. RATED PTN.

Section Title : OSHPD FIRE RESISTIVE STANDARD DETAILS		OPD No:
Sheet Title : PARTITION TERMINATION @ GLAZING		FR1.35

2/18/2014 8:14:03 AM

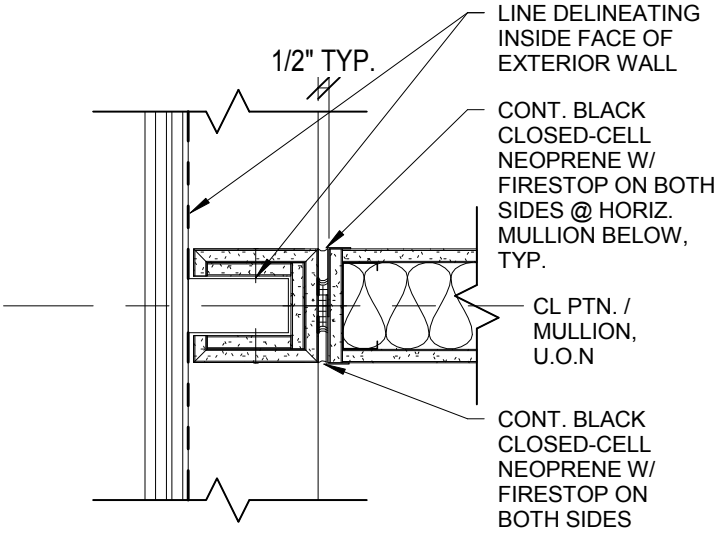

TYP. DRYWALL WRAPPED MULLION PTN.

Section Title : OSHPD FIRE RESISTIVE STANDARD DETAILS		OPD No:
Sheet Title : PARTITION TERMINATION @ GLAZING		FR1.36

2/18/2014 8:14:04 AM

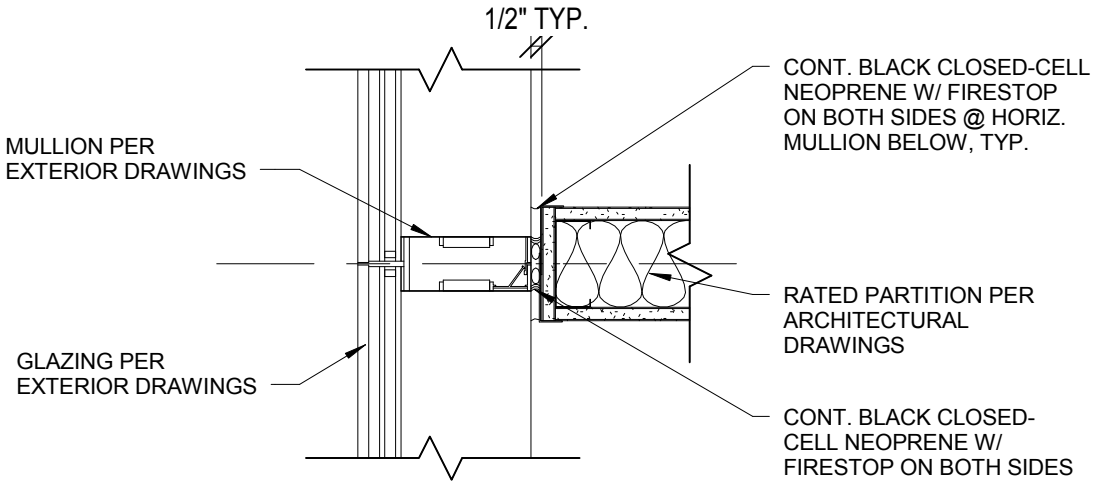

TYP. 1 HR. RATED PTN.

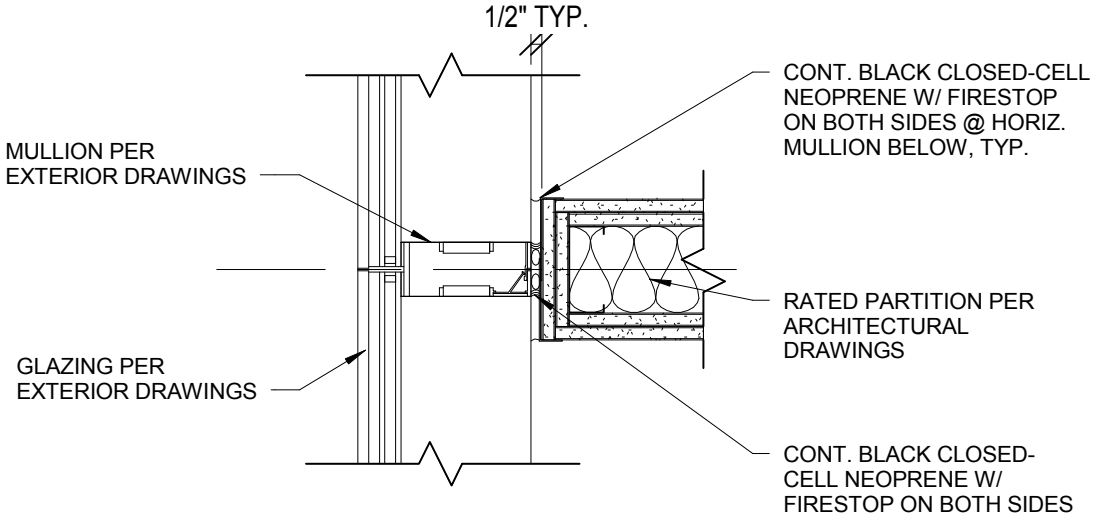

TYP. 2 HR. RATED PTN.

Section Title : OSHPD FIRE RESISTIVE STANDARD DETAILS		OPD No:
Sheet Title : PARTITION TERMINATION @ STRUCTURAL MULLION		FR1.37

2/18/2014 8:14:04 AM

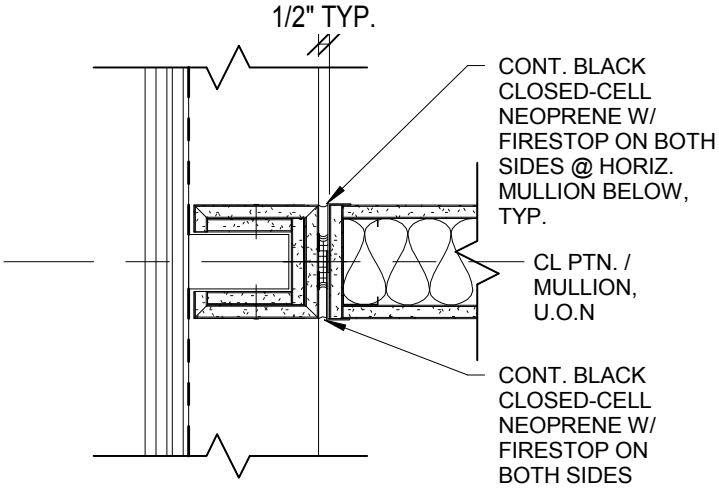

TYP. DRYWALL WRAPPED MULLION PTN.

Section Title : OSHPD FIRE RESISTIVE STANDARD DETAILS		OPD No:
Sheet Title : PARTITION TERMINATION @ STRUCTURAL MULLION - WRAPPED		FR1.38

2/18/2014 8:14:04 AM

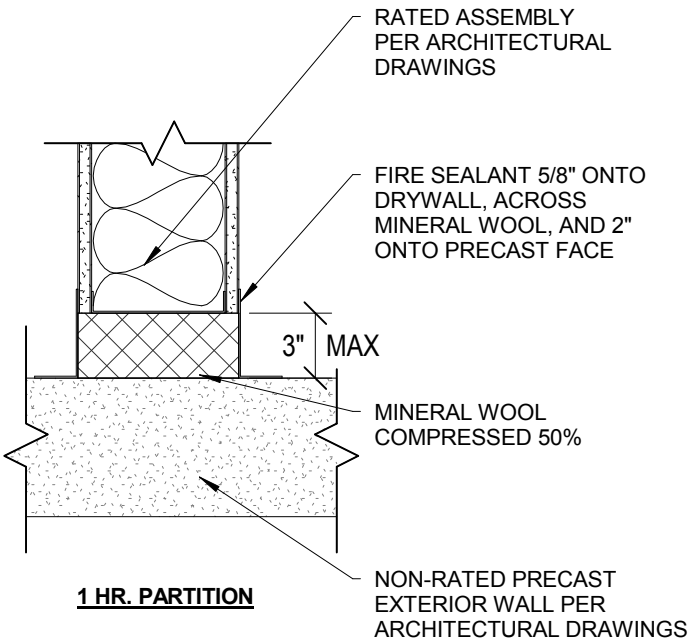

1 HR. PARTITION

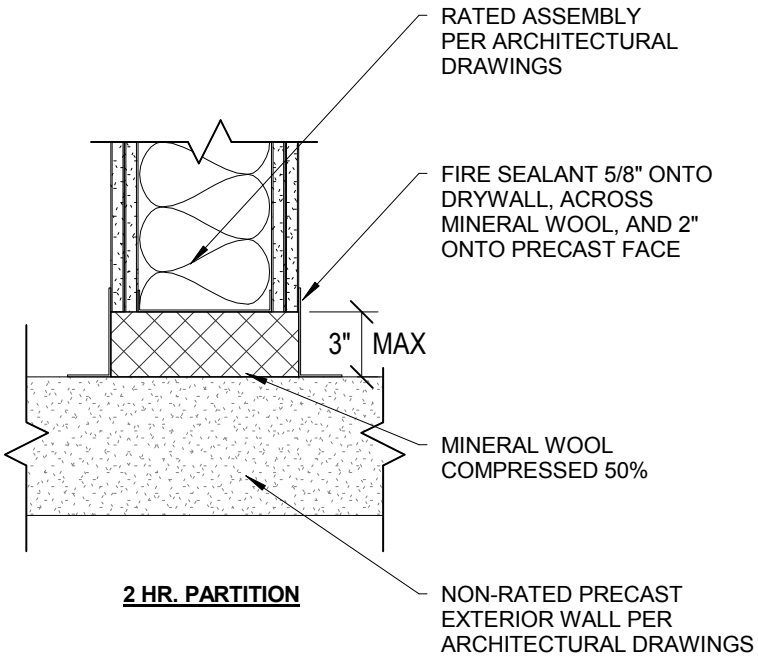

2 HR. PARTITION

Section Title : OSHPD FIRE RESISTIVE STANDARD DETAILS		OPD No:
Sheet Title : PARTITION TERMINATION TO PRECAST		FR1.39

2/18/2014 8:14:04 AM

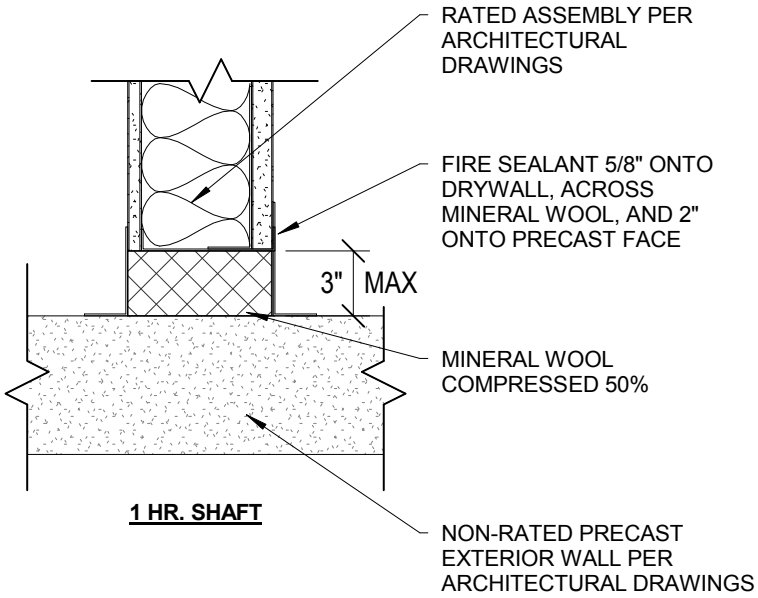

1 HR. SHAFT

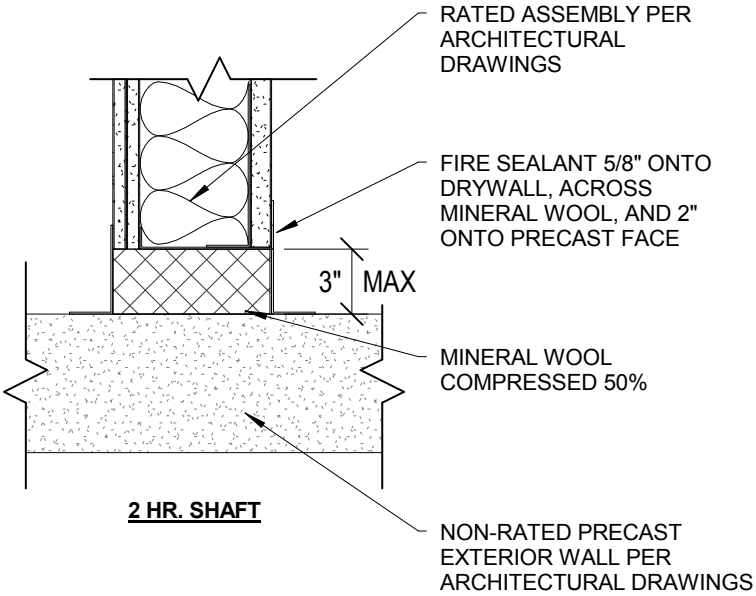

2 HR. SHAFT

Section Title : OSHPD FIRE RESISTIVE STANDARD DETAILS	OPD No:
Sheet Title : SHAFTWALL TERMINATION TO PRECAST	FR1.40

2/18/2014 8:14:04 AM

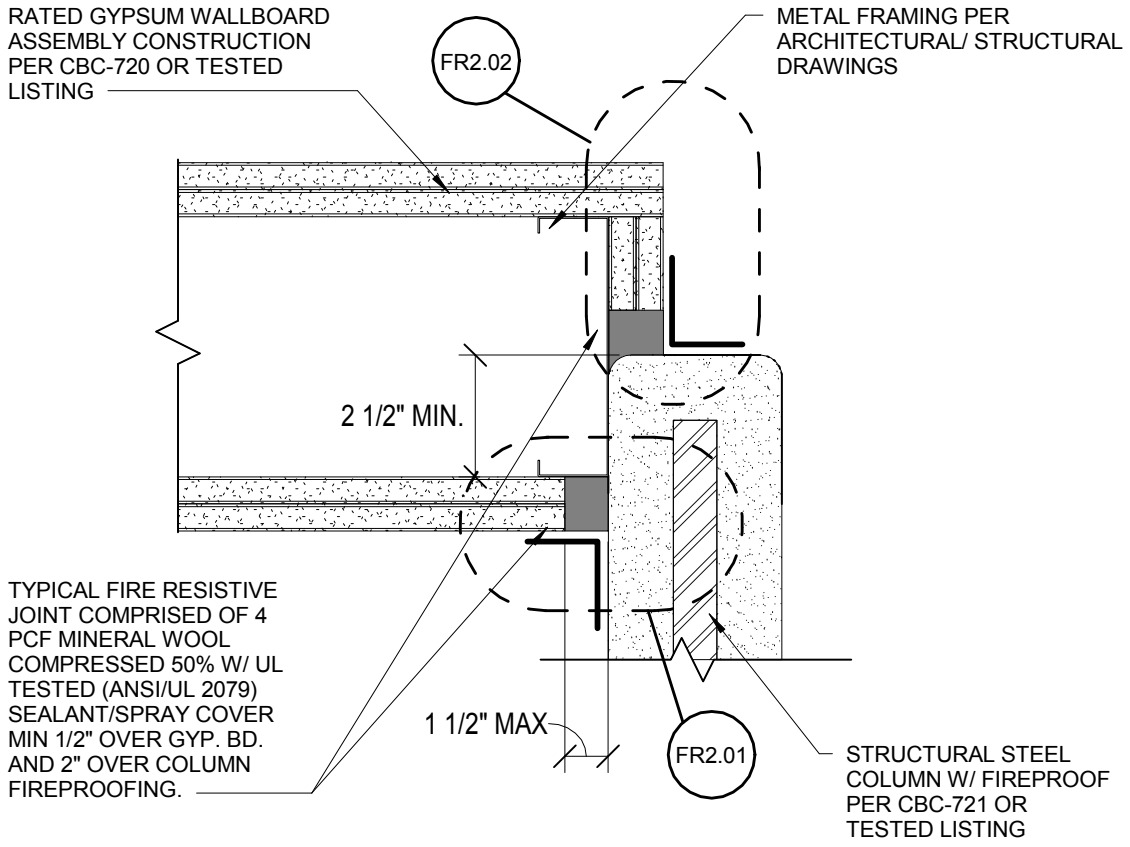

Section Title : OSHPD FIRE RESISTIVE STANDARD DETAILS	OPD No:
Sheet Title : BASIC JOINT DETAIL FOR 2-HR-FR RATED WALL ASSEMBLIES - COMPOSITE @ JOINTS	FR2.00

2/18/2014 8:14:05 AM

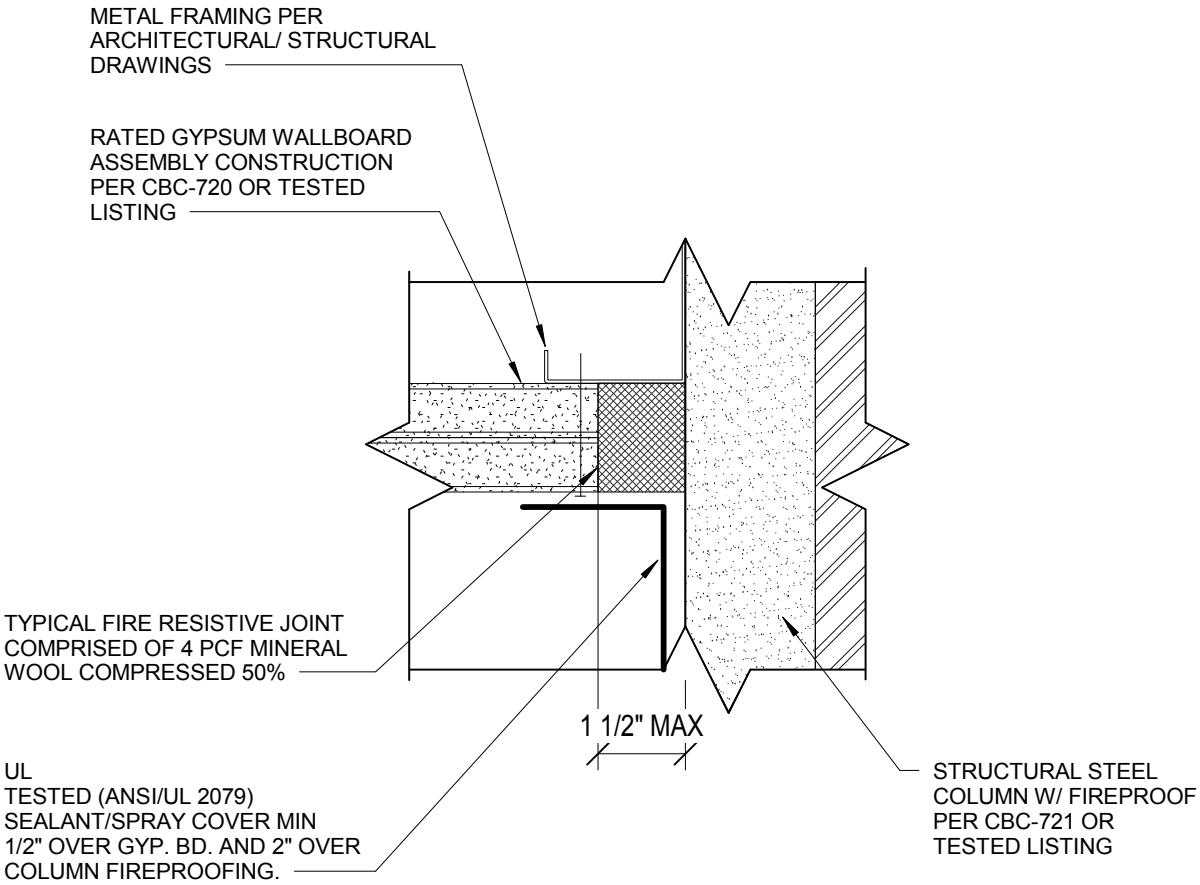

Section Title : OSHPD FIRE RESISTIVE STANDARD DETAILS	OPD No:
Sheet Title : BASIC JOINT DETAIL FOR 2-HR-FR RATED WALL ASSEMBLIES - FACE JOINT	FR2.01

2/18/2014 8:14:05 AM

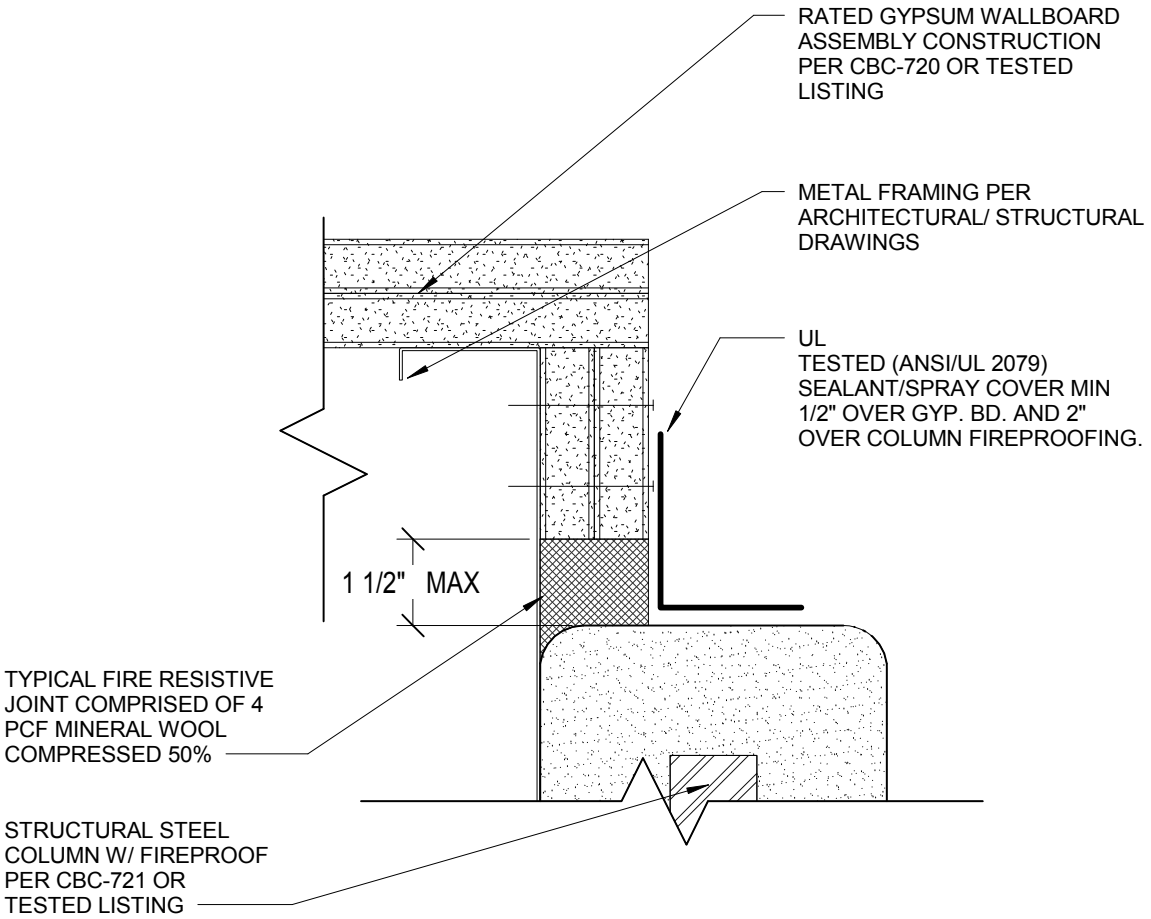

Section Title : OSHPD FIRE RESISTIVE STANDARD DETAILS	OPD No:
Sheet Title : BASIC JOINT DETAIL FOR 2-HR-FR RATED WALL ASSEMBLIES - END JOINT	FR2.02

2/18/2014 8:14:05 AM

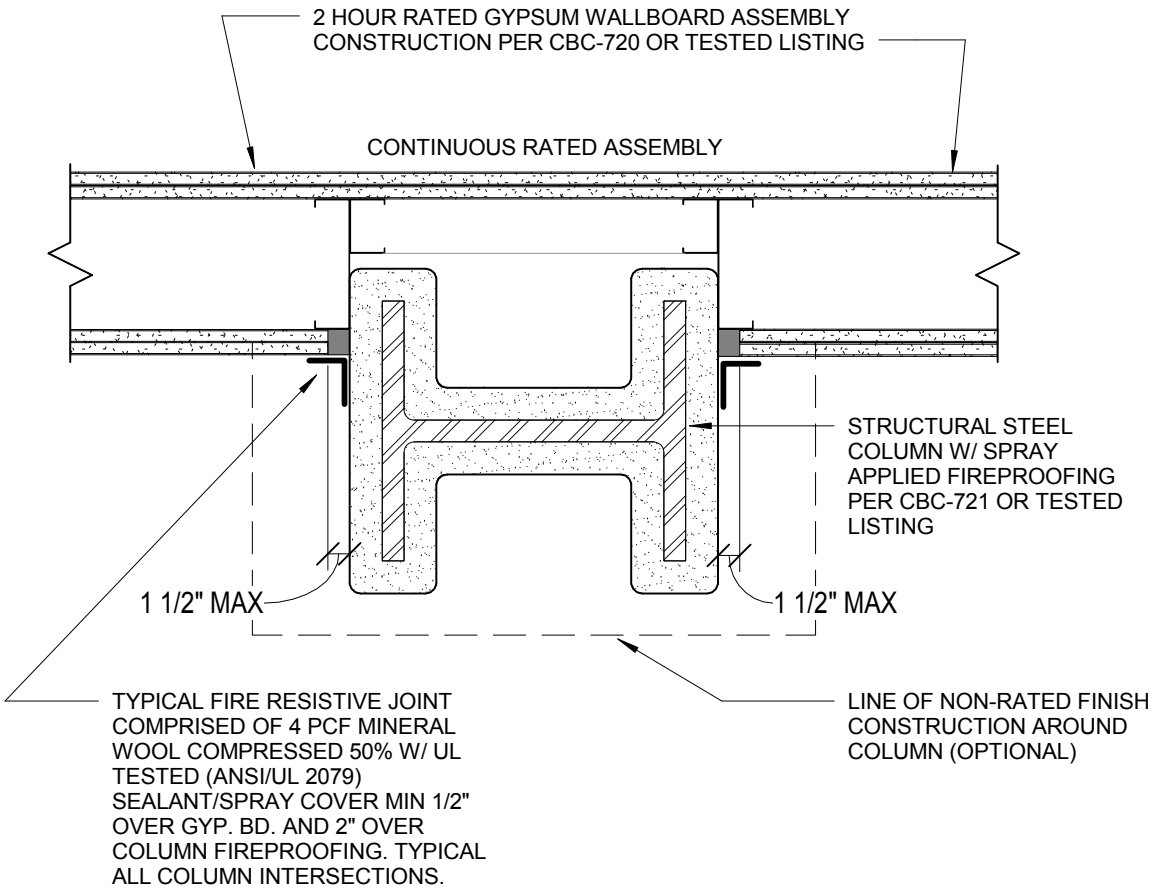

NOTES:
1. MAXIMUM SEPARATION BETWEEN SIDE OF GYPSUM WALLBOARD AND FACE OF FIREPROOFING IS 1 1/2".
2. THE FIRE RESISTIVE RATING OF STEEL COLUMN MUST BE EQUAL OR GREATER THAN WALL RATING.
3. "WET" THICKNESS OF SEALANT TO BE MIN. 1/8" TESTED IN ACCORDANCE WITH ASTM E1966 (ANSI/UL 2079).
4. SEE FR2.00, FR2.01, FR2.02 FOR JOINT DESCRIPTION

Section Title : OSHPD FIRE RESISTIVE STANDARD DETAILS	OPD No:
Sheet Title : INTERSECTION OF 2-HR-FR PARTITION, WALL AND BARRIER AT PROTECTED COLUMN	FR2.10

2/18/2014 8:14:06 AM

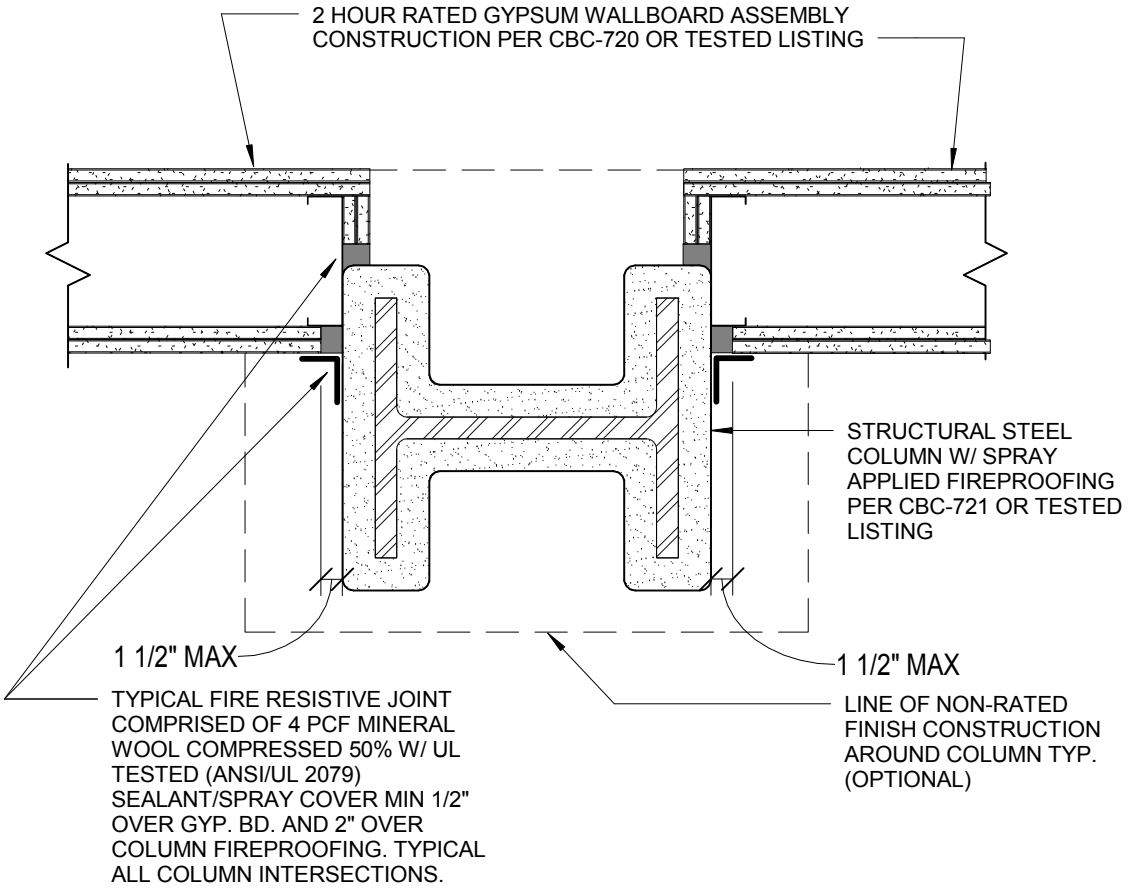

NOTES:
1. MAXIMUM SEPARATION BETWEEN SIDE OF GYPSUM WALLBOARD AND FACE OF FIREPROOFING IS 1 1/2".
2. THE FIRE RESISTIVE RATING OF STEEL COLUMN MUST BE EQUAL OR GREATER THAN WALL RATING.
3. "WET" THICKNESS OF SEALANT TO BE MIN. 1/8" TESTED IN ACCORDANCE WITH ASTM E1966 (ANSI/UL 2079).
4. SEE FR2.00, FR2.01, FR2.02 FOR JOINT DESCRIPTION

Section Title : OSHPD FIRE RESISTIVE STANDARD DETAILS	OPD No:
Sheet Title : INTERSECTION OF 2-HR-FR PARTITION, WALL AND BARRIER AT PROTECTED COLUMN	FR2.11

2/18/2014 8:14:06 AM

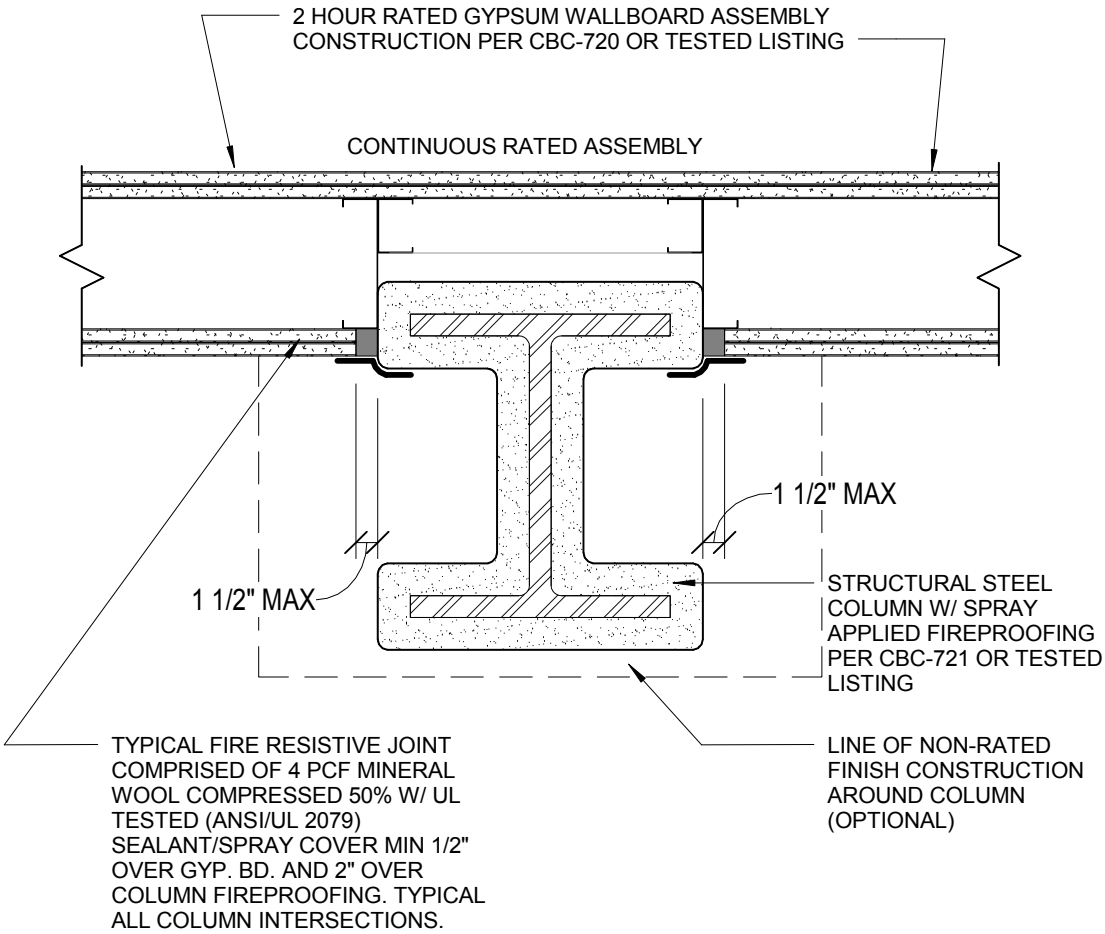

NOTES:
1. MAXIMUM SEPARATION BETWEEN SIDE OF GYPSUM WALLBOARD AND FACE OF FIREPROOFING IS 1 1/2".
2. THE FIRE RESISTIVE RATING OF STEEL COLUMN MUST BE EQUAL OR GREATER THAN WALL RATING.
3. "WET" THICKNESS OF SEALANT TO BE MIN. 1/8" TESTED IN ACCORDANCE WITH ASTM E1966 (ANSI/UL 2079).
4. SEE FR2.00, FR2.01, FR2.02 FOR JOINT DESCRIPTION

Section Title : OSHPD FIRE RESISTIVE STANDARD DETAILS	OPD No:
Sheet Title : INTERSECTION OF 2-HR-FR PARTITION, WALL AND BARRIER AT PROTECTED COLUMN	FR2.12

2/18/2014 8:14:06 AM

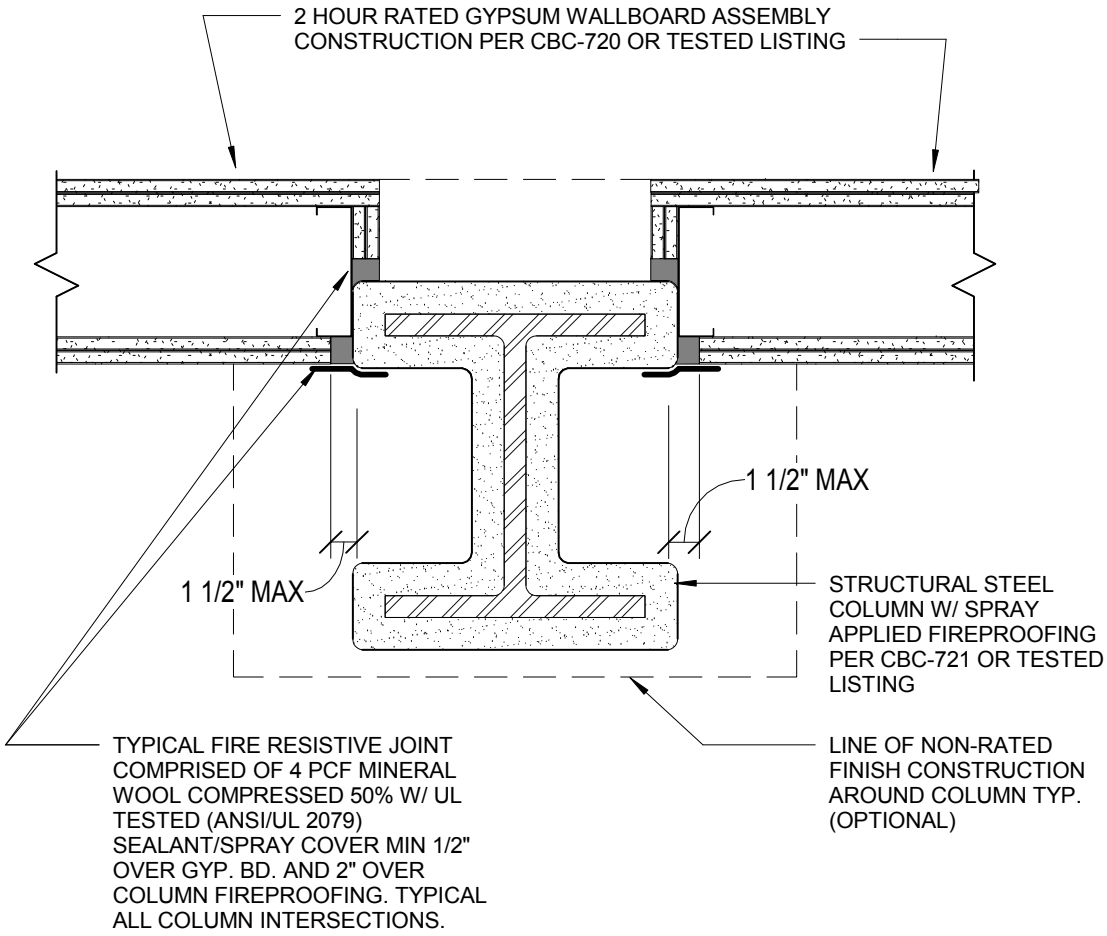

NOTES:
1. MAXIMUM SEPARATION BETWEEN SIDE OF GYPSUM WALLBOARD AND FACE OF FIREPROOFING IS 1 1/2".
2. THE FIRE RESISTIVE RATING OF STEEL COLUMN MUST BE EQUAL OR GREATER THAN WALL RATING.
3. "WET" THICKNESS OF SEALANT TO BE MIN. 1/8" TESTED IN ACCORDANCE WITH ASTM E1966 (ANSI/UL 2079).
4. SEE FR2.00, FR2.01, FR2.02 FOR JOINT DESCRIPTION

Section Title : OSHPD FIRE RESISTIVE STANDARD DETAILS	OPD No:
Sheet Title : INTERSECTION OF 2-HR-FR PARTITION, WALL AND BARRIER AT PROTECTED COLUMN	FR2.13

2/18/2014 8:14:07 AM

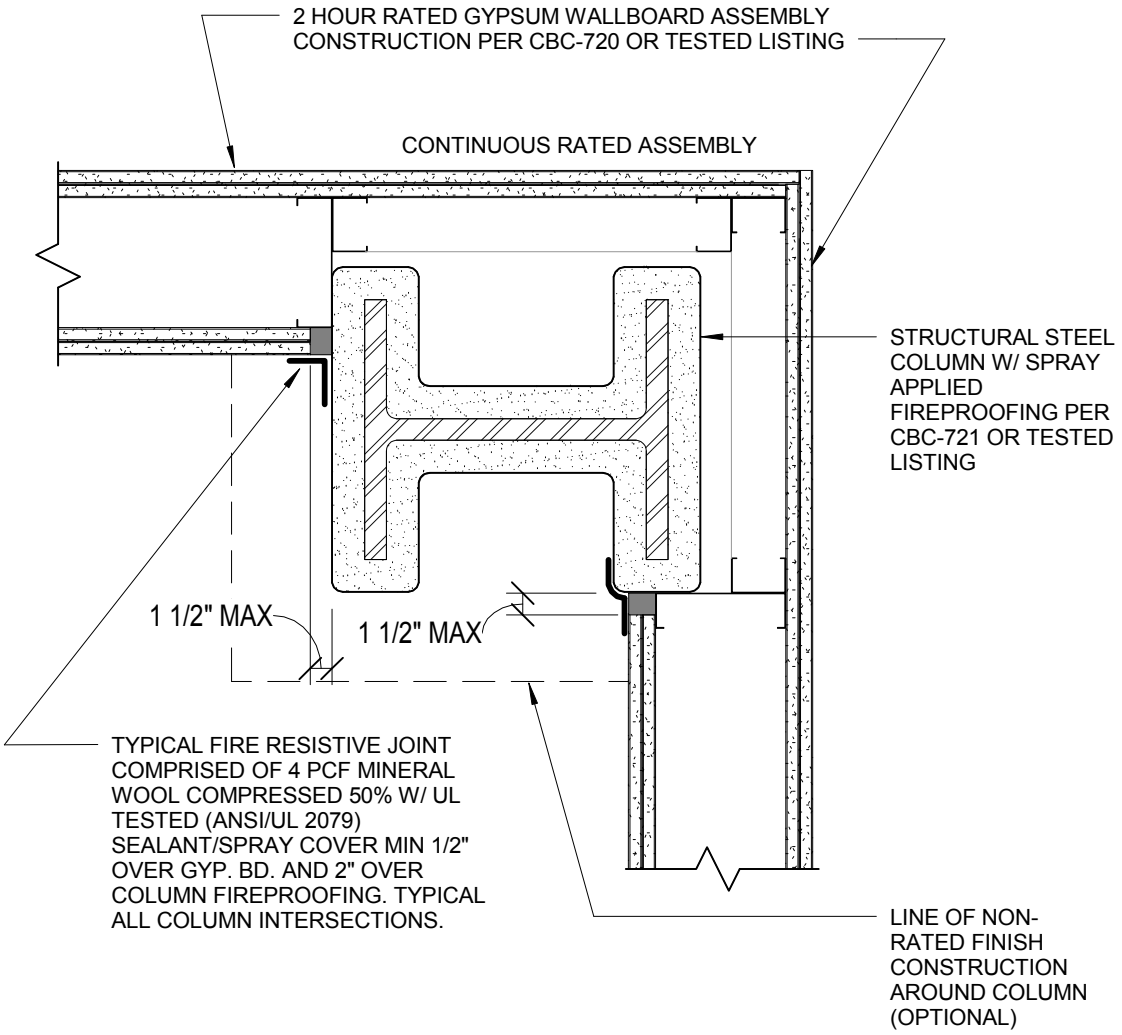

NOTES:
1. MAXIMUM SEPARATION BETWEEN SIDE OF GYPSUM WALLBOARD AND FACE OF FIREPROOFING IS 1 1/2".
2. THE FIRE RESISTIVE RATING OF STEEL COLUMN MUST BE EQUAL OR GREATER THAN WALL RATING.
3. "WET" THICKNESS OF SEALANT TO BE MIN. 1/8" TESTED IN ACCORDANCE WITH ASTM E1966 (ANSI/UL 2079).
4. SEE FR2.00, FR2.01, FR2.02 FOR JOINT DESCRIPTION

Section Title : OSHPD FIRE RESISTIVE STANDARD DETAILS	OPD No:
Sheet Title : INTERSECTION OF 2-HR-FR PARTITION, WALL AND BARRIER AT PROTECTED COLUMN	FR2.14

2/18/2014 8:14:07 AM

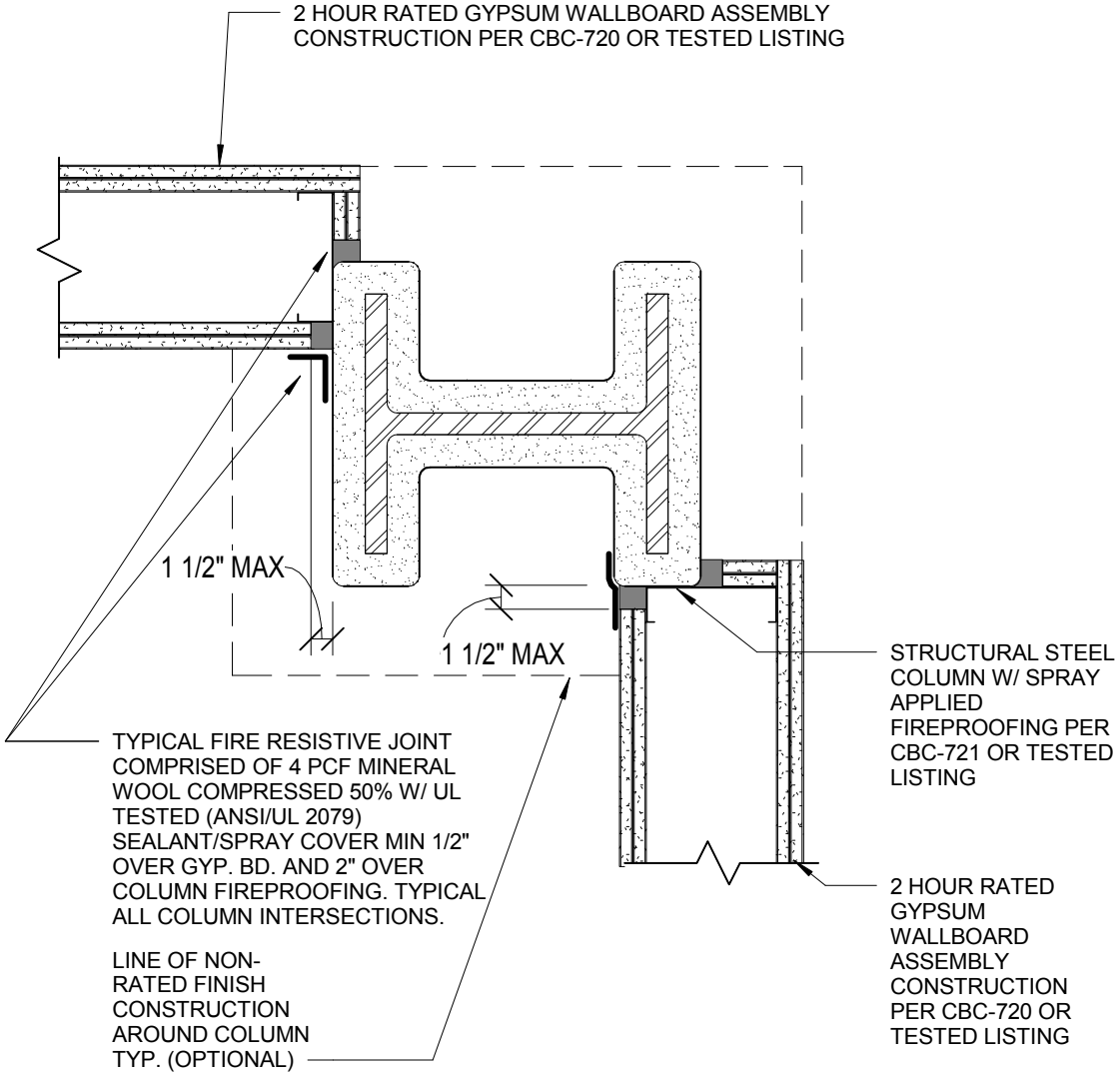

NOTES:
1. MAXIMUM SEPARATION BETWEEN SIDE OF GYPSUM WALLBOARD AND FACE OF FIREPROOFING IS 1 1/2".
2. THE FIRE RESISTIVE RATING OF STEEL COLUMN MUST BE EQUAL OR GREATER THAN WALL RATING.
3. "WET" THICKNESS OF SEALANT TO BE MIN. 1/8" TESTED IN ACCORDANCE WITH ASTM E1966 (ANSI/UL 2079).
4. SEE FR2.00, FR2.01, FR2.02 FOR JOINT DESCRIPTION

Section Title : OSHPD FIRE RESISTIVE STANDARD DETAILS	OPD No:
Sheet Title : INTERSECTION OF 2-HR-FR PARTITION, WALL AND BARRIER AT PROTECTED COLUMN	FR2.15

2/18/2014 8:14:08 AM

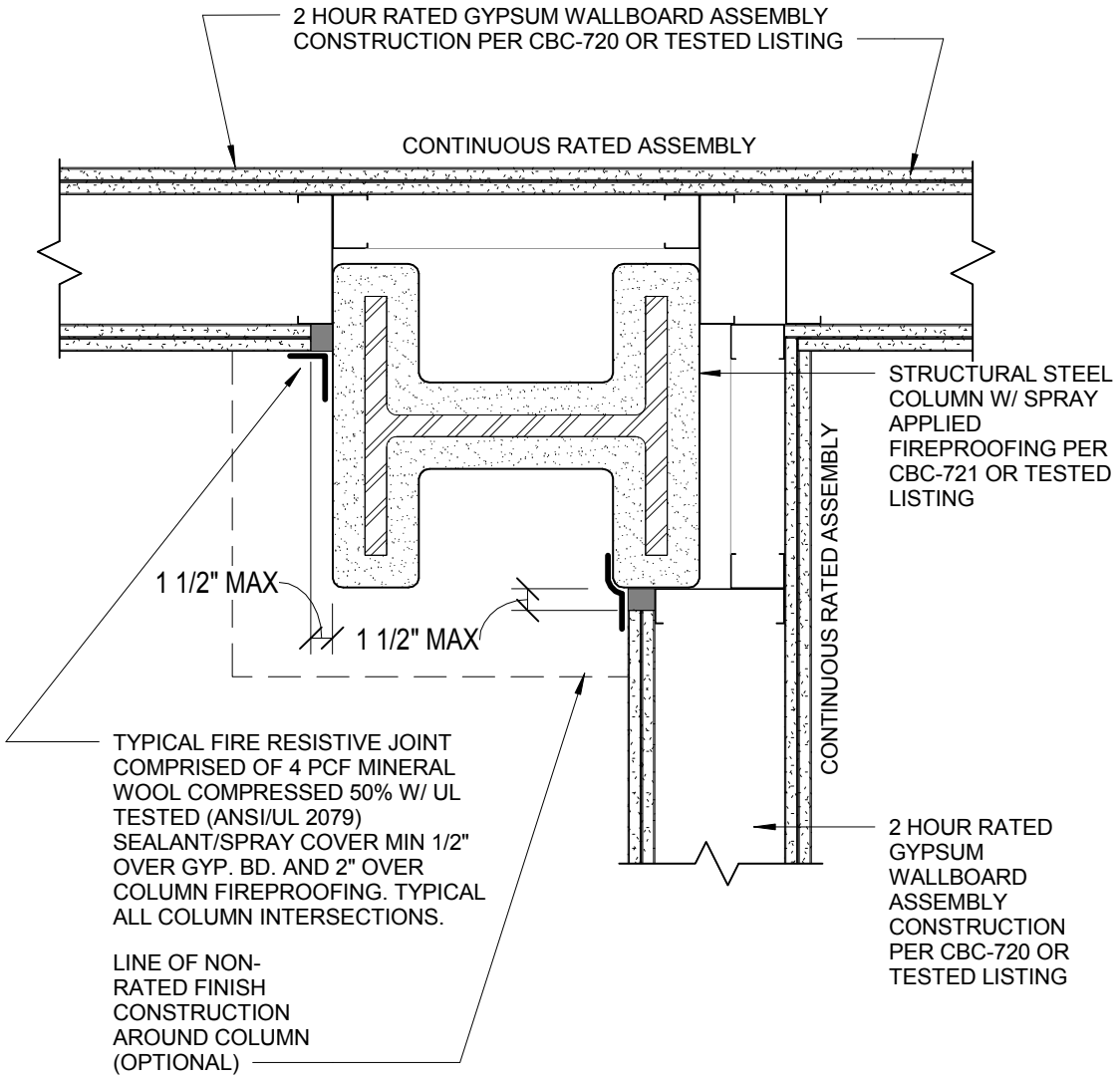

NOTES:
1. MAXIMUM SEPARATION BETWEEN SIDE OF GYPSUM WALLBOARD AND FACE OF FIREPROOFING IS 1 1/2".
2. THE FIRE RESISTIVE RATING OF STEEL COLUMN MUST BE EQUAL OR GREATER THAN WALL RATING.
3. "WET" THICKNESS OF SEALANT TO BE MIN. 1/8" TESTED IN ACCORDANCE WITH ASTM E1966 (ANSI/UL 2079).
4. SEE FR2.00, FR2.01, FR2.02 FOR JOINT DESCRIPTION

Section Title : OSHPD FIRE RESISTIVE STANDARD DETAILS	OPD No:
Sheet Title : INTERSECTION OF 2-HR-FR PARTITION, WALL AND BARRIER AT PROTECTED COLUMN	FR2.16

2/18/2014 8:14:08 AM

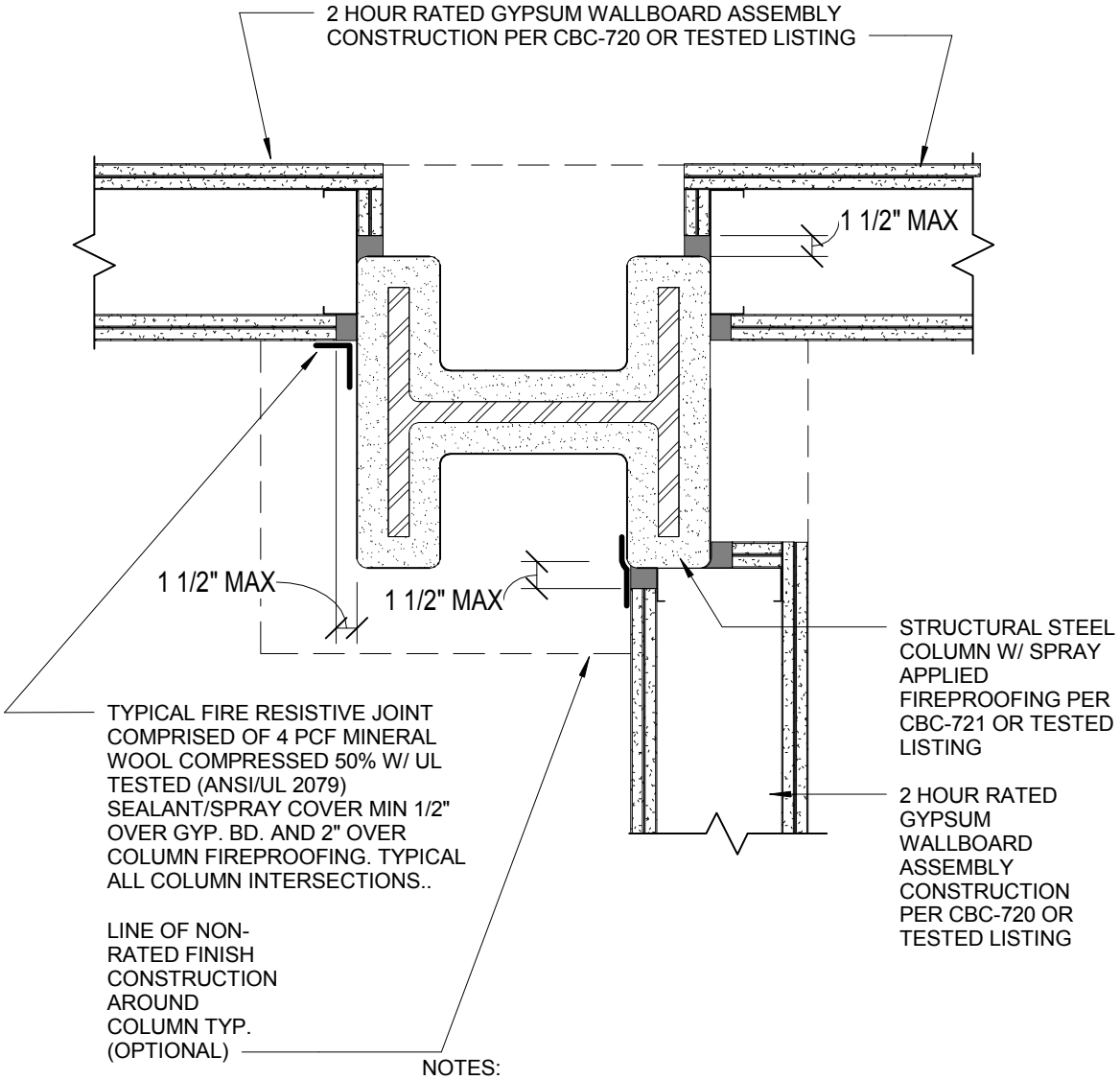

NOTES:
1. MAXIMUM SEPARATION BETWEEN SIDE OF GYPSUM WALLBOARD AND FACE OF FIREPROOFING IS 1 1/2".
2. THE FIRE RESISTIVE RATING OF STEEL COLUMN MUST BE EQUAL OR GREATER THAN WALL RATING.
3. "WET" THICKNESS OF SEALANT TO BE MIN. 1/8" TESTED IN ACCORDANCE WITH ASTM E1966 (ANSI/UL 2079).
4. SEE FR2.00, FR2.01, FR2.02 FOR JOINT DESCRIPTION

Section Title : OSHPD FIRE RESISTIVE STANDARD DETAILS	OPD No:
Sheet Title : INTERSECTION OF 2-HR-FR PARTITION, WALL AND BARRIER AT PROTECTED COLUMN	FR2.17

2/18/2014 8:14:09 AM

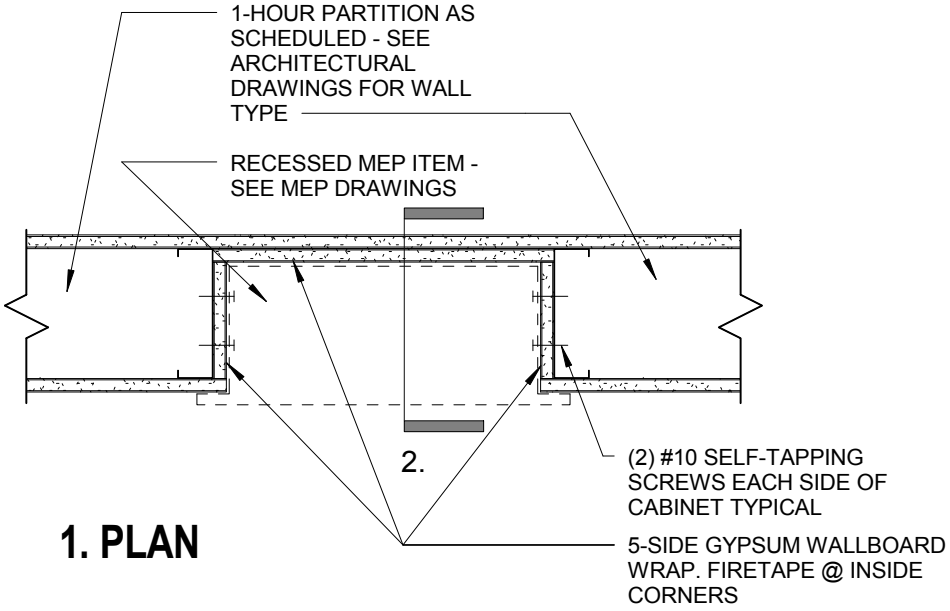

1. PLAN

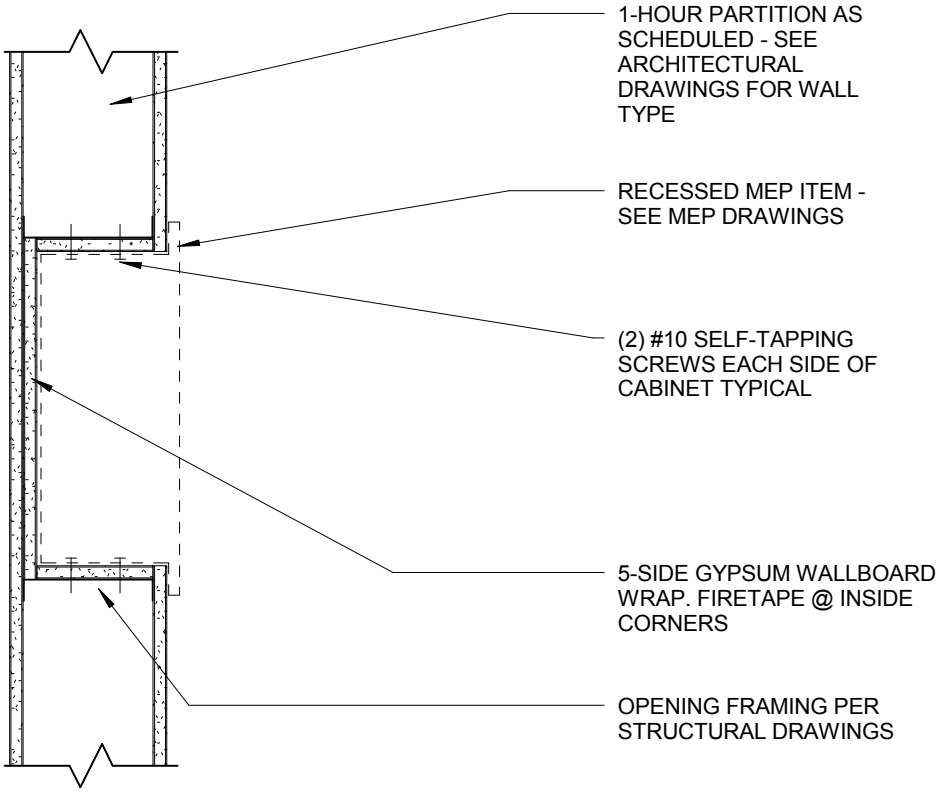

2. SECTION

Section Title : OSHPD FIRE RESISTIVE STANDARD DETAILS	OPD No:
Sheet Title : 1 HR. "5-SIDED BOX" @ RECESSED M.E.P. CABINETS	FR3.01

2/18/2014 8:14:09 AM

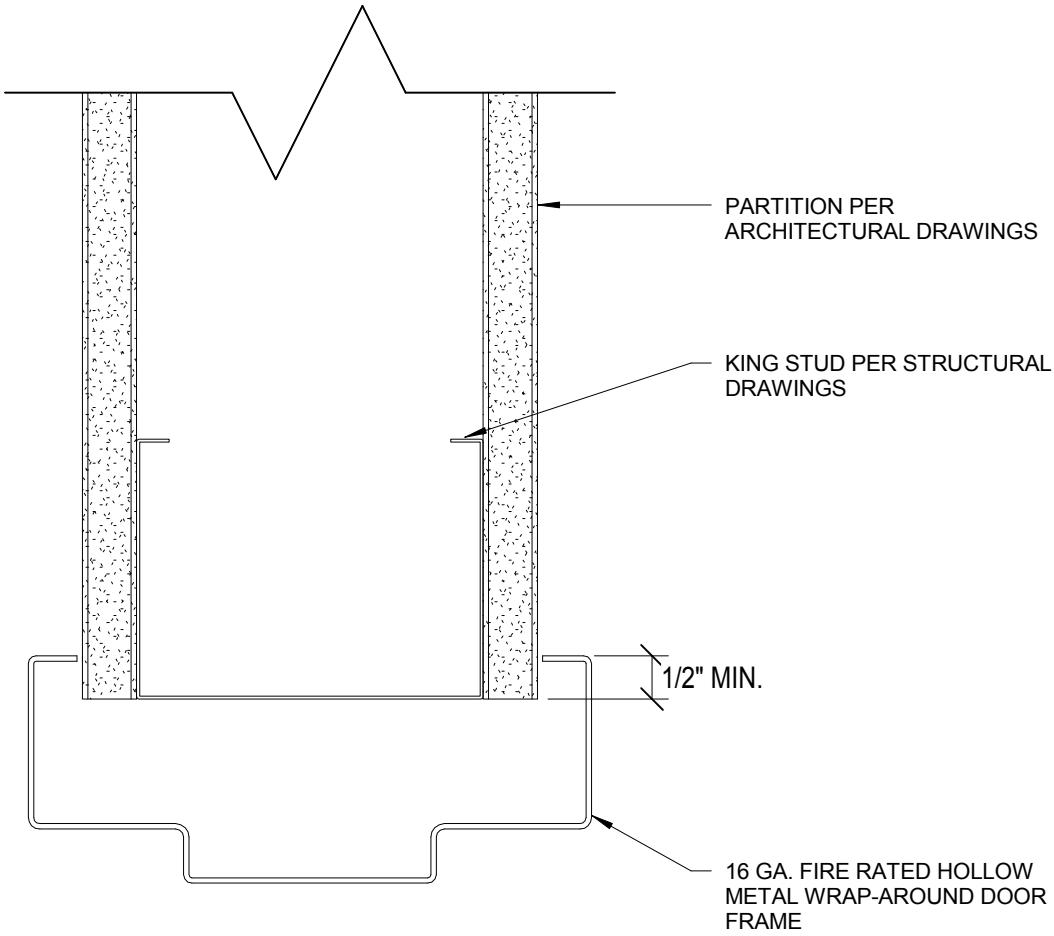

Section Title : OSHPD FIRE RESISTIVE STANDARD DETAILS	OPD No:
Sheet Title : HOLLOW METAL DOOR JAMB @ 1 HR-RATED WALLS	FR3.02

2/18/2014 8:14:09 AM

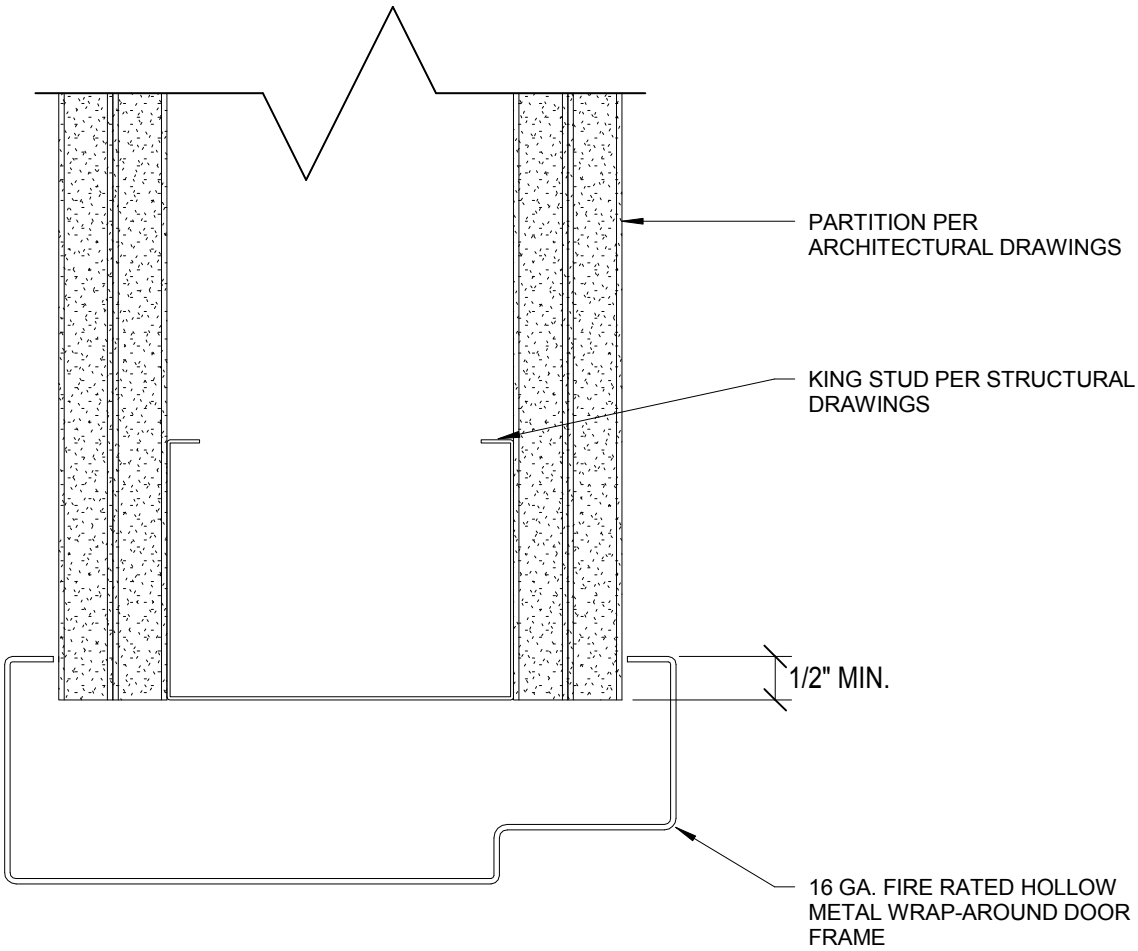

Section Title : OSHPD FIRE RESISTIVE STANDARD DETAILS	OPD No:
Sheet Title : HOLLOW METAL DOOR JAMB @ 2HR-RATED WALL	FR3.03

2/18/2014 8:14:10 AM

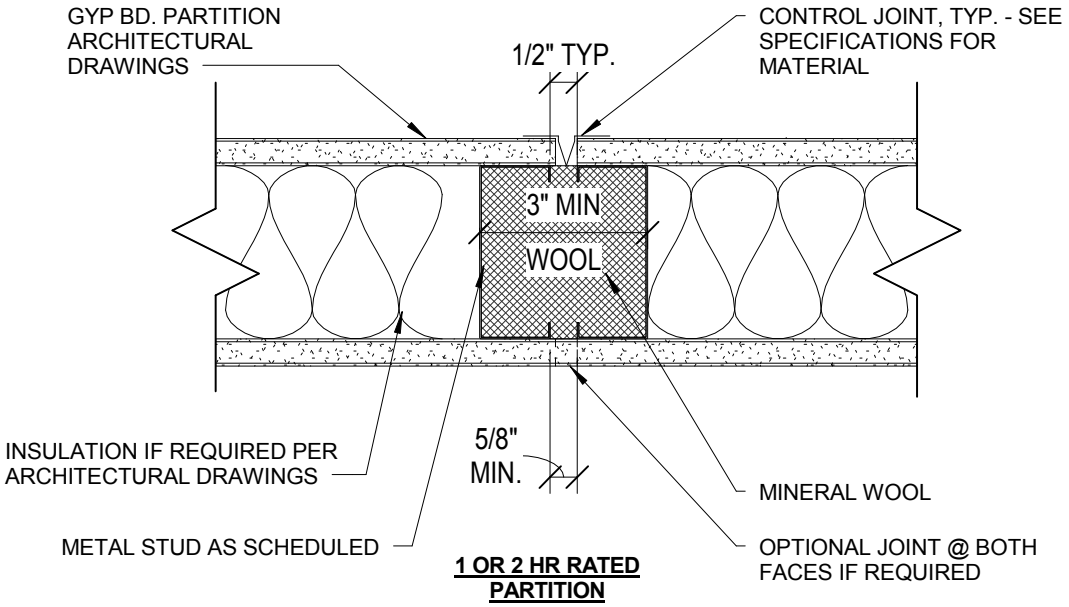

1 OR 2 HR RATED PARTITION

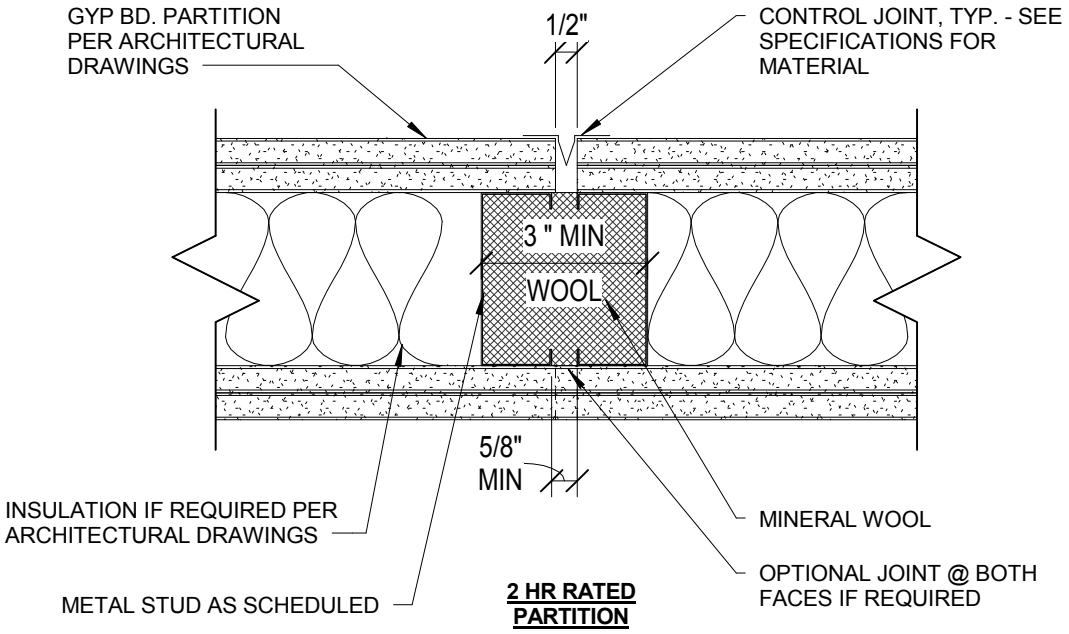

2 HR RATED PARTITION

NOTE:
CONTROL JOINT MATERIAL MAY TERMINATE 6" ABOVE CEILING LINE. CONTINUE JOINT WITH GYP. BD. TAPE - DO NOT FILL JOINT WITH TAPING COMPOUND.

Section Title : OSHPD FIRE RESISTIVE STANDARD DETAILS	OPD No:
Sheet Title : GYP. BD. CONTROL JOINT @ RATED PARTITIONS - MINERAL WOOL	FR3.04

2/18/2014 8:14:10 AM

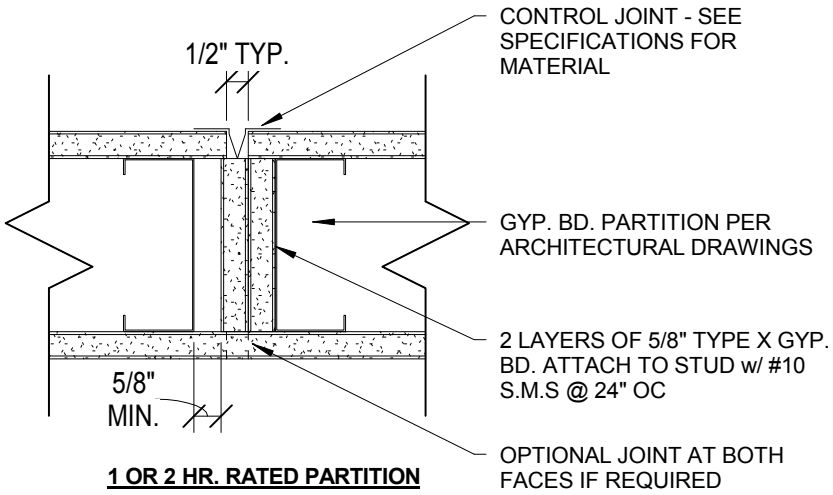

1 OR 2 HR. RATED PARTITION

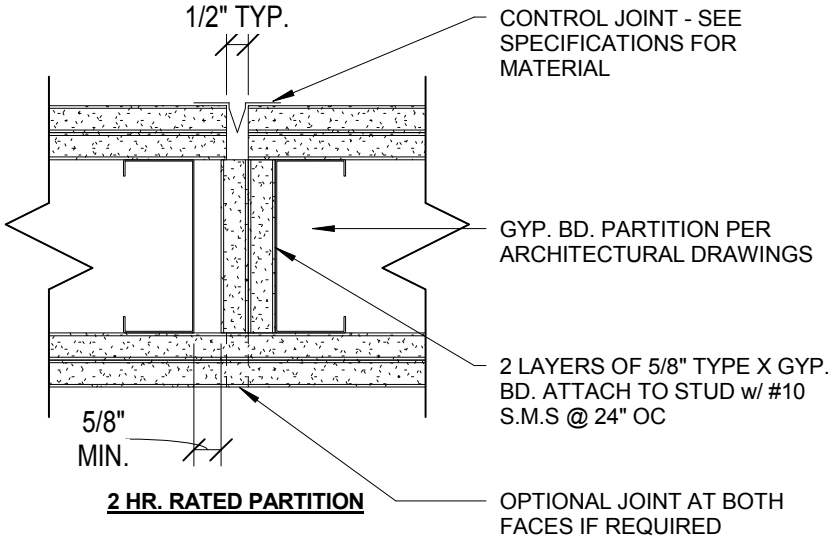

2 HR. RATED PARTITION

NOTE:
CONTROL JOINT MATERIAL MAY TERMINATE 6" ABOVE CEILING LINE. CONTINUE JOINT WITH GYP. BD. TAPE - DO NOT FILL JOINT WITH TAPING COMPOUND.

Section Title : OSHPD FIRE RESISTIVE STANDARD DETAILS	OPD No:
Sheet Title : GYP. BD. CONTROL JOINT @ RATED PARTITIONS - GYP. BD.	FR3.05

2/18/2014 8:14:11 AM

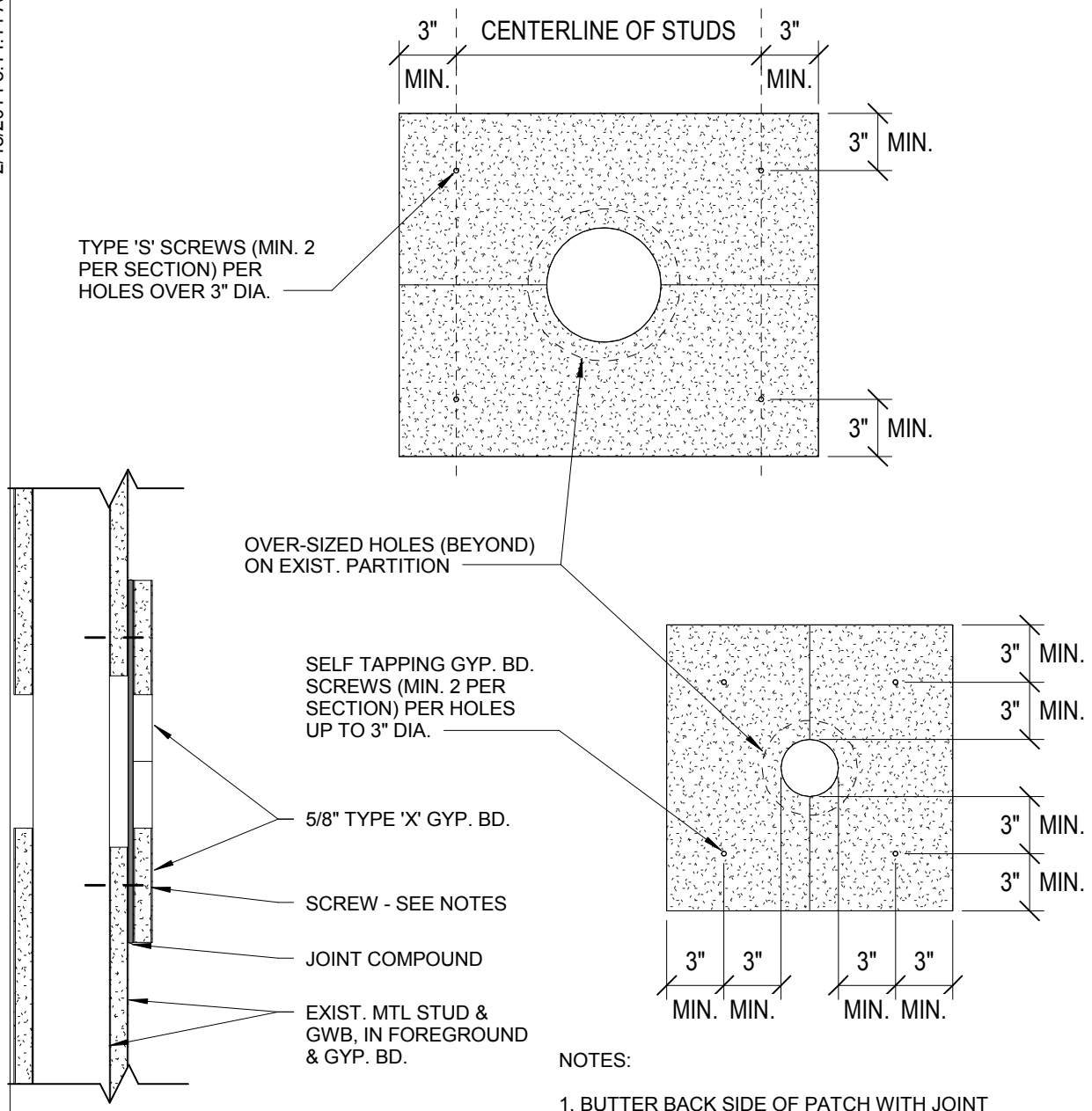

NOTES:

1. BUTTER BACK SIDE OF PATCH WITH JOINT COMPOUND OR GYPSUM FIRE SEALANT

2. LEAVE ALL SCREWS EXPOSED

Section Title : OSHPD FIRE RESISTIVE STANDARD DETAILS	OPD No:
Sheet Title : RATED WALL BLOW-OUT PATCH @ PENETRATION	FR3.06

2/18/2014 8:14:11 AM

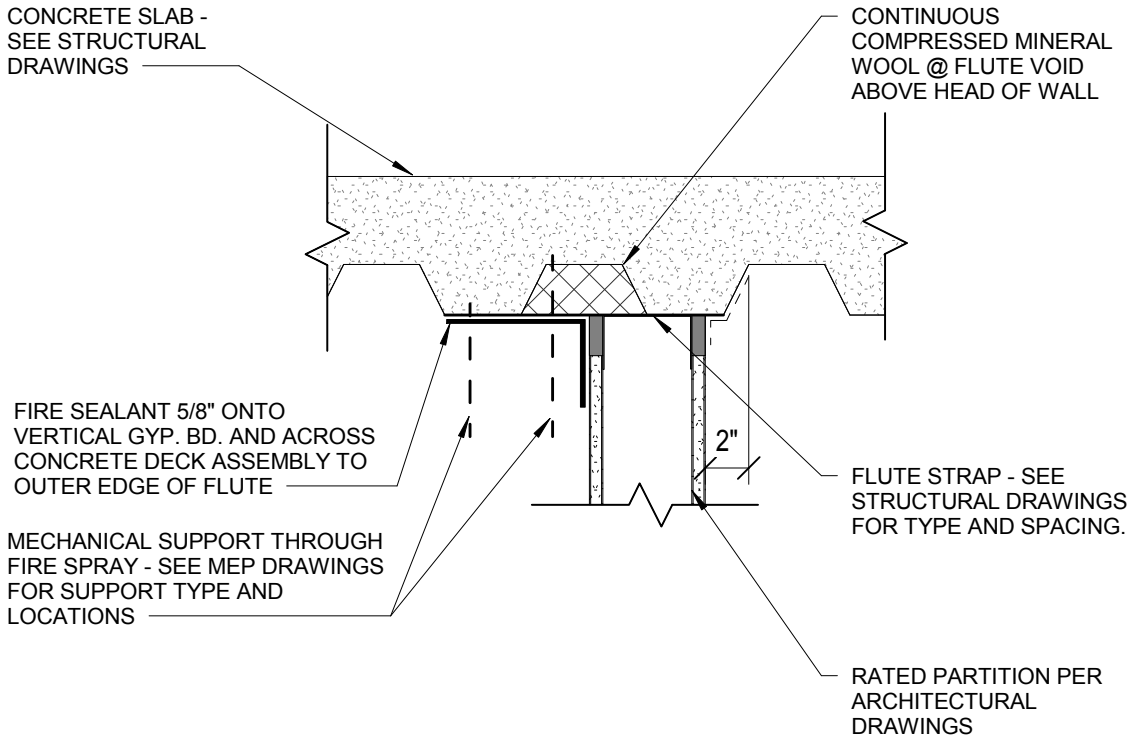

Section Title : OSHPD FIRE RESISTIVE STANDARD DETAILS	OPD No:
Sheet Title : PENETRATION REPAIR AT TOP OF WALL	FR3.07

2/18/2014 8:14:12 AM

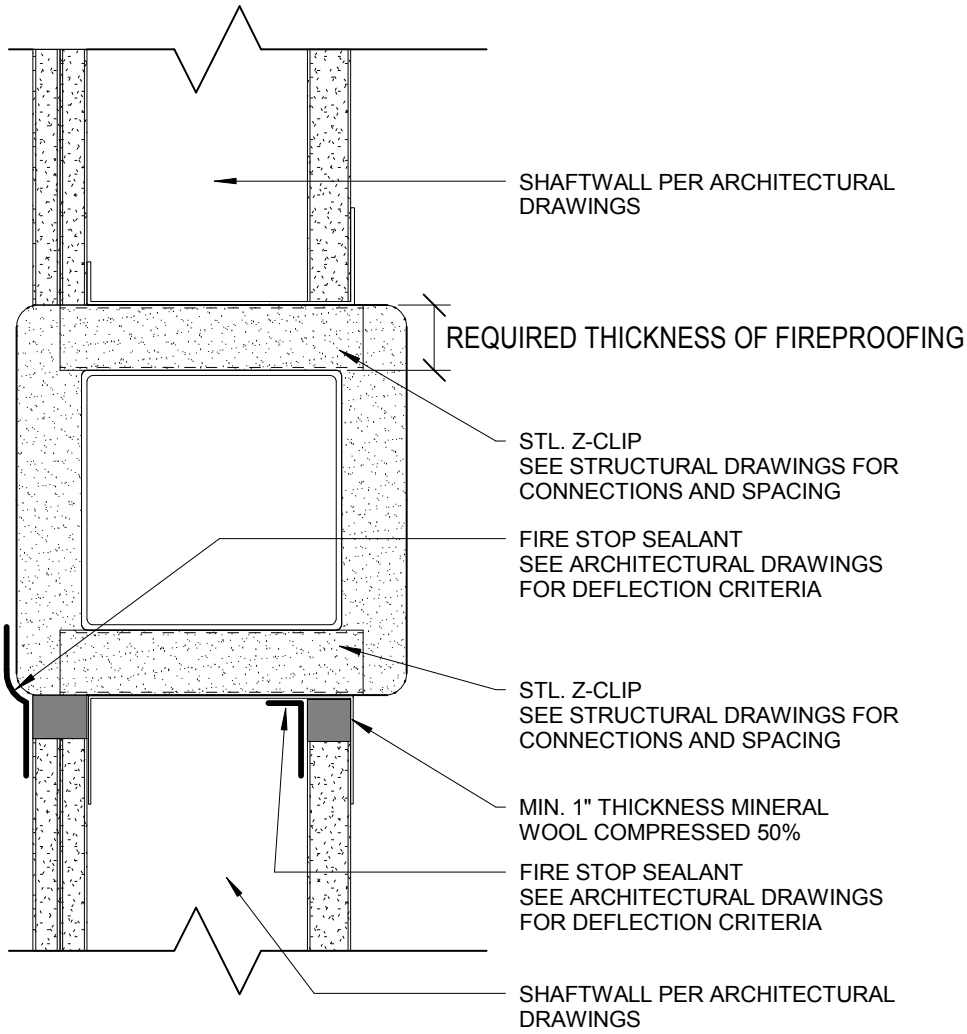

Section Title : OSHPD FIRE RESISTIVE STANDARD DETAILS		OPD No:
Sheet Title : SHAFT WALL @ INTERMEDIATE BEAM		FR3.08

2/18/2014 8:14:12 AM

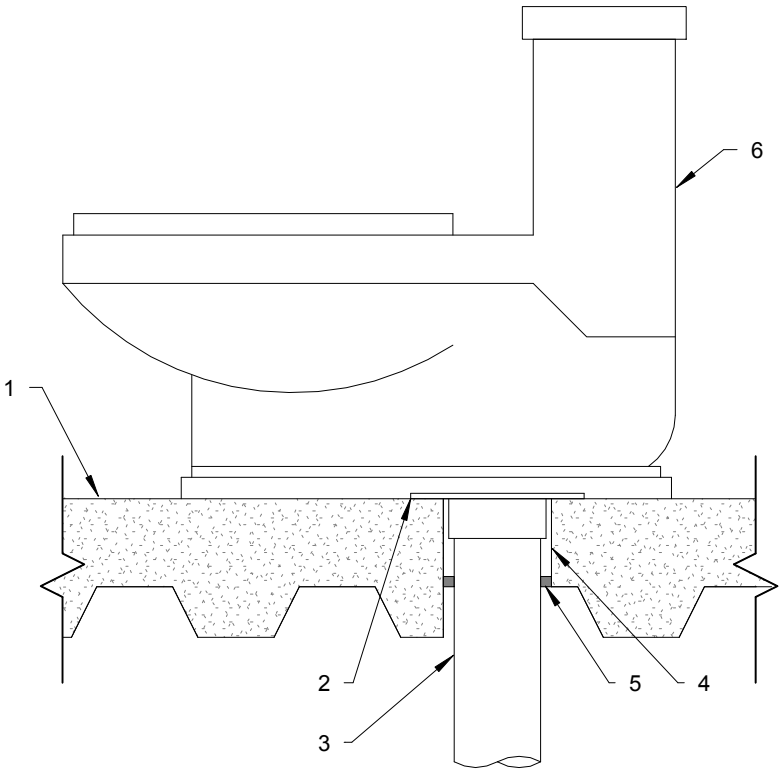

1. CONCRETE FLOOR OVER METAL DECKING ASSEMBLY (MINIMUM 2-1/2" THICK) (2HR. FIRE-RATING).
2. CAST IRON CLOSET FLANGE SIZED TO ACCOMMODATE DRAIN PIPE AND SECURED TO CONCRETE FLOOR WITH CONCRETE ANCHORS.
3. MAXIMUM 4" NOMINAL DIAMETER CAST IRON PIPE.
4. MINERAL WOOL (MIN. 4 PCF DENSITY) TIGHTLY PACKED AND RECESSED FROM BOTTOM OF CONCRETE FLOOR TO ACCOMMODATE SEALANT.
5. INTUMESCENT FIRESTOP SEALANT.
6. FLOOR MOUNTED WATER CLOSET.

NOTES: 1. MAXIMUM DIAMETER OF OPENING = 5"
2. ANNULAR SPACE = MINIMUM 3/8"

Section Title : OSHPD FIRE RESISTIVE STANDARD DETAILS	OPD No:
Sheet Title : FLOOR SLAB PENETRATION OR WATER CLOSET WASTE LINE	FR4.01

2/18/2014 8:14:12 AM

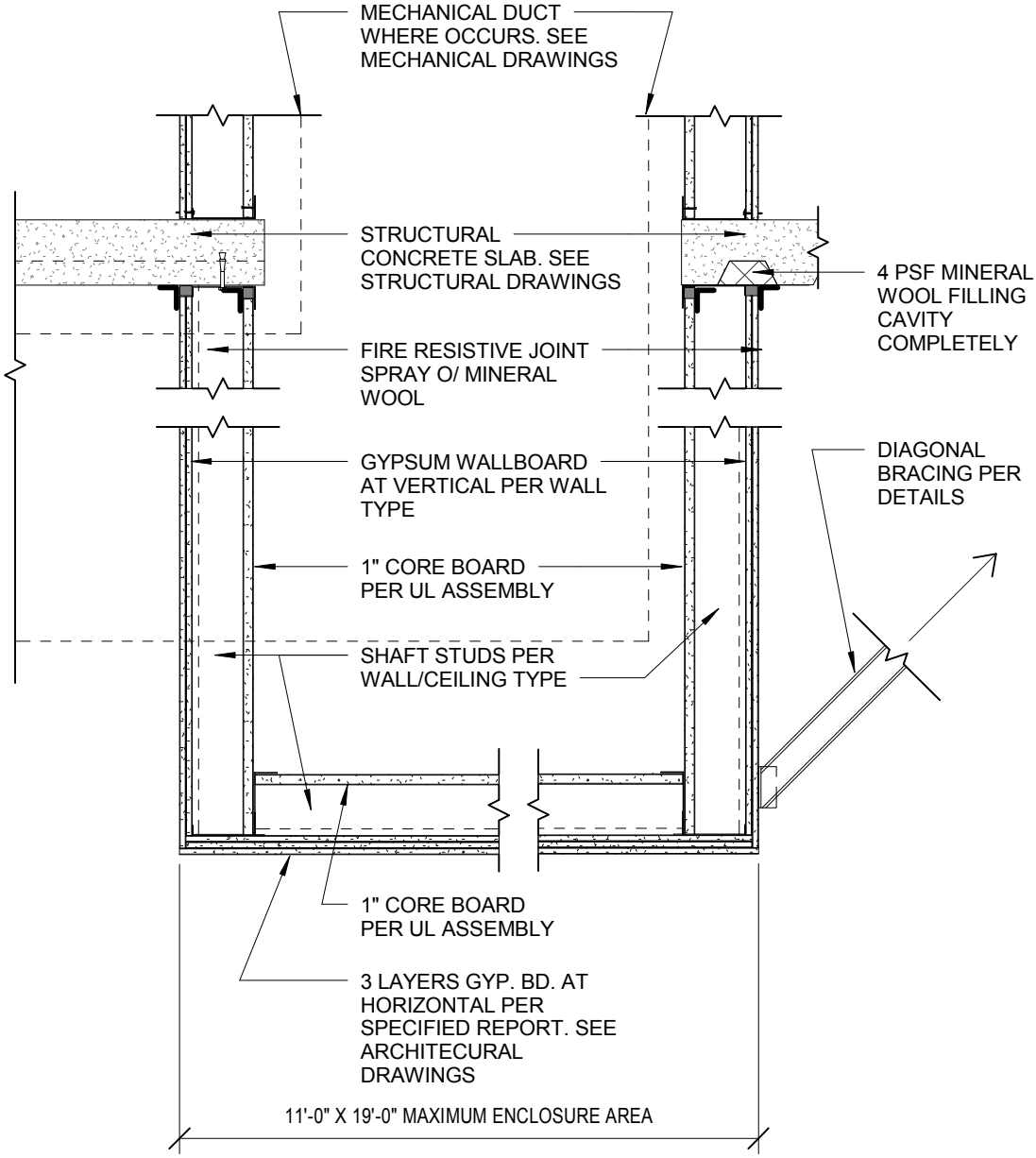

NOTES:
1. DETAIL BASED ON ICBO EVALUATION REPORT ER-3579.
2. REPORTS NER-258, NER-506, ER-2541, AND ER-4924 MAY BE SUBSTITUTED FOR ER-3579 WITH APPROPRIATE ALTERATIONS TO HORIZONTAL DRYWALL CONFIGURATION.
3. PROVIDE REPORT ON DOCUMENTS OF RECORD AND REFERENCE LOCATION.

Section Title : OSHPD FIRE RESISTIVE STANDARD DETAILS	OPD No:
Sheet Title : VERTICAL DUCT SHAFT BOTTOM DETAILS	FR4.02

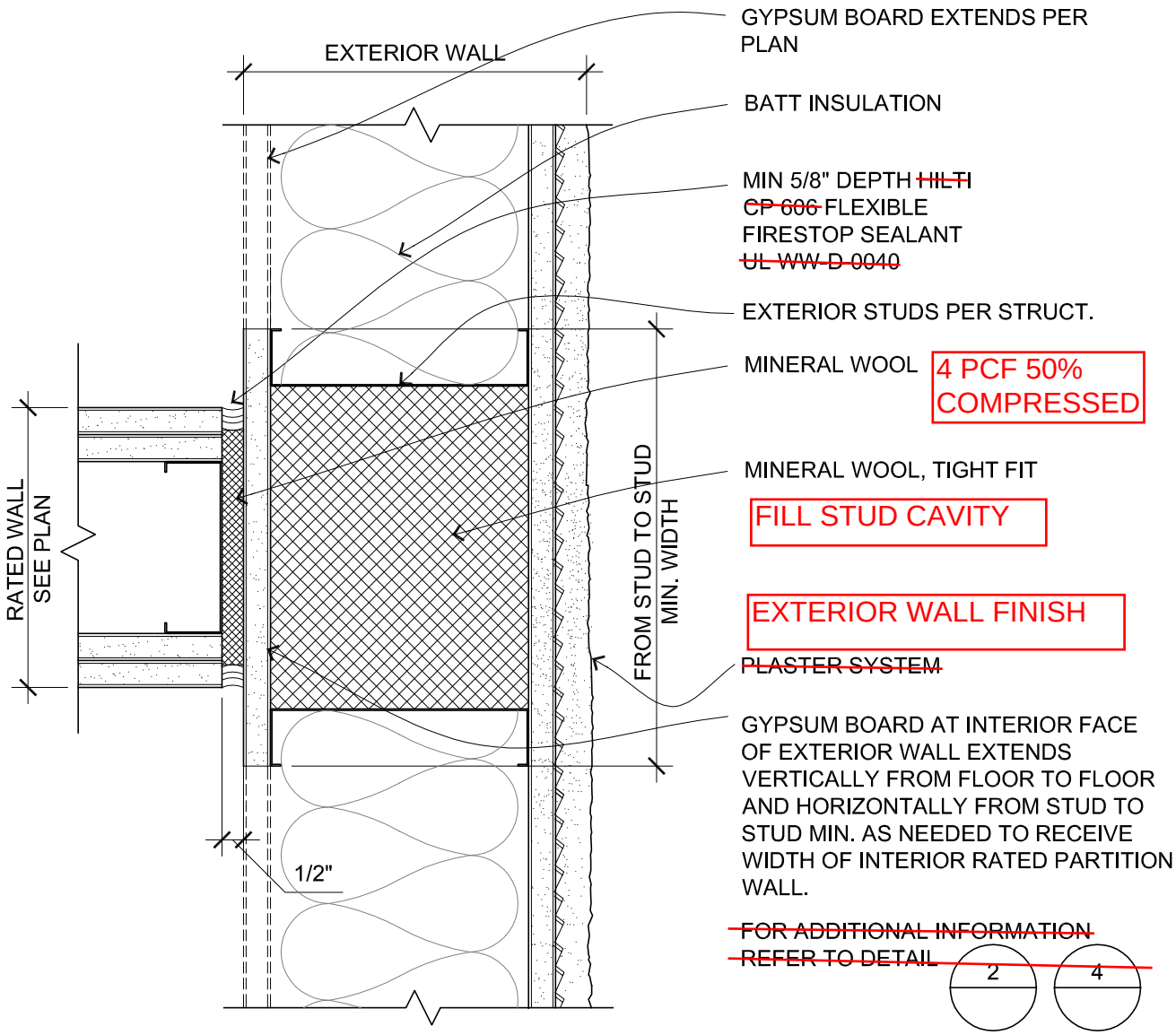

RATED INTERIOR WALL TERMINATION AT EXTERIOR WALL		
RATED_WALL_TERMINATION_AT_EXTERIOR_WALL.dwg	REFER TO EJ 111479a	3" = 1'-0"

3/A9.0.05
KFMC HOS

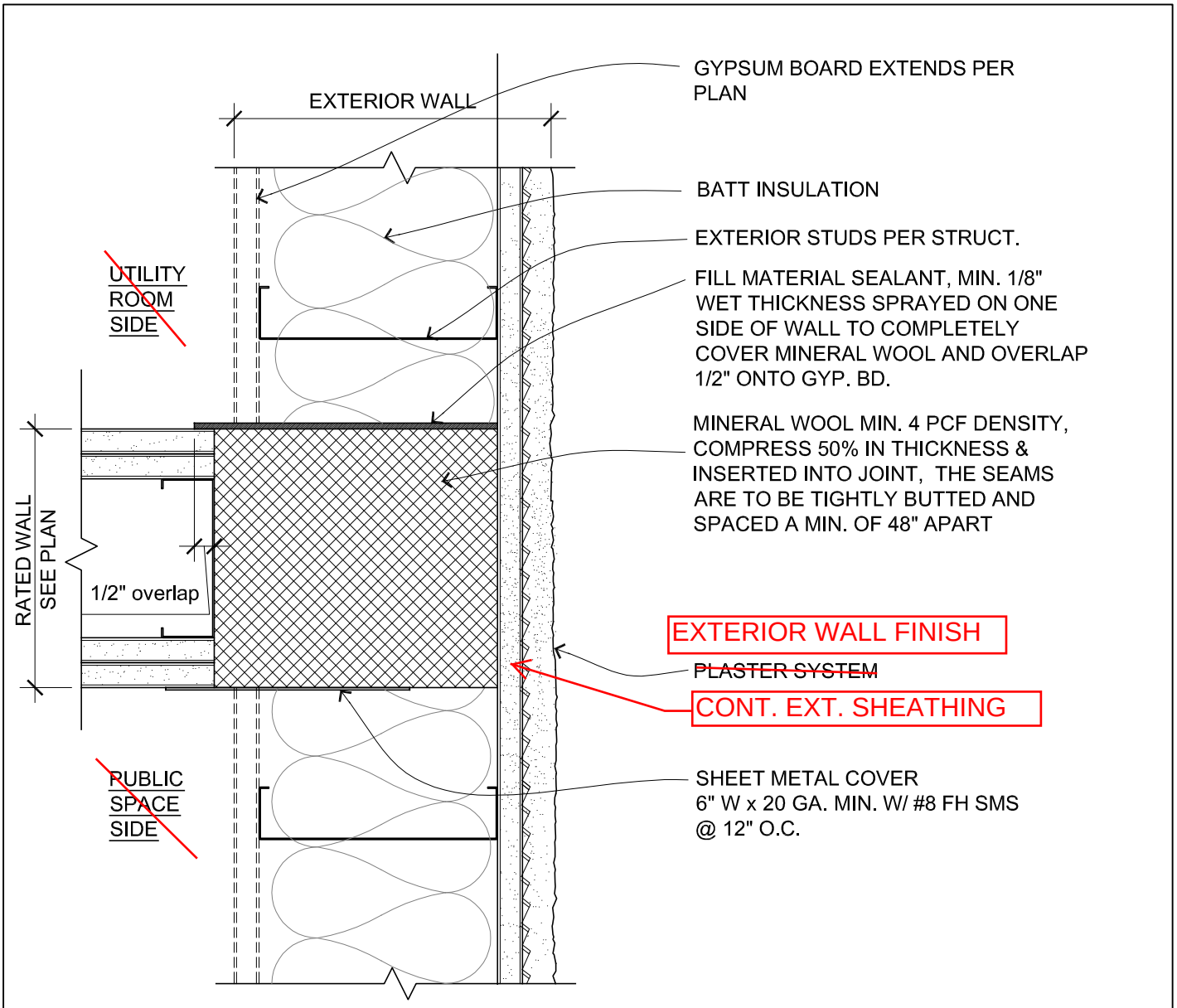

RATED INTERIOR WALL TERMINATION AT EXTERIOR WALL	
RATED_WALL_TERMINATION_AT_EXTERIOR_WALL.dwg	3" = 1'-0"

6/A9.0.05
KFMC HOS

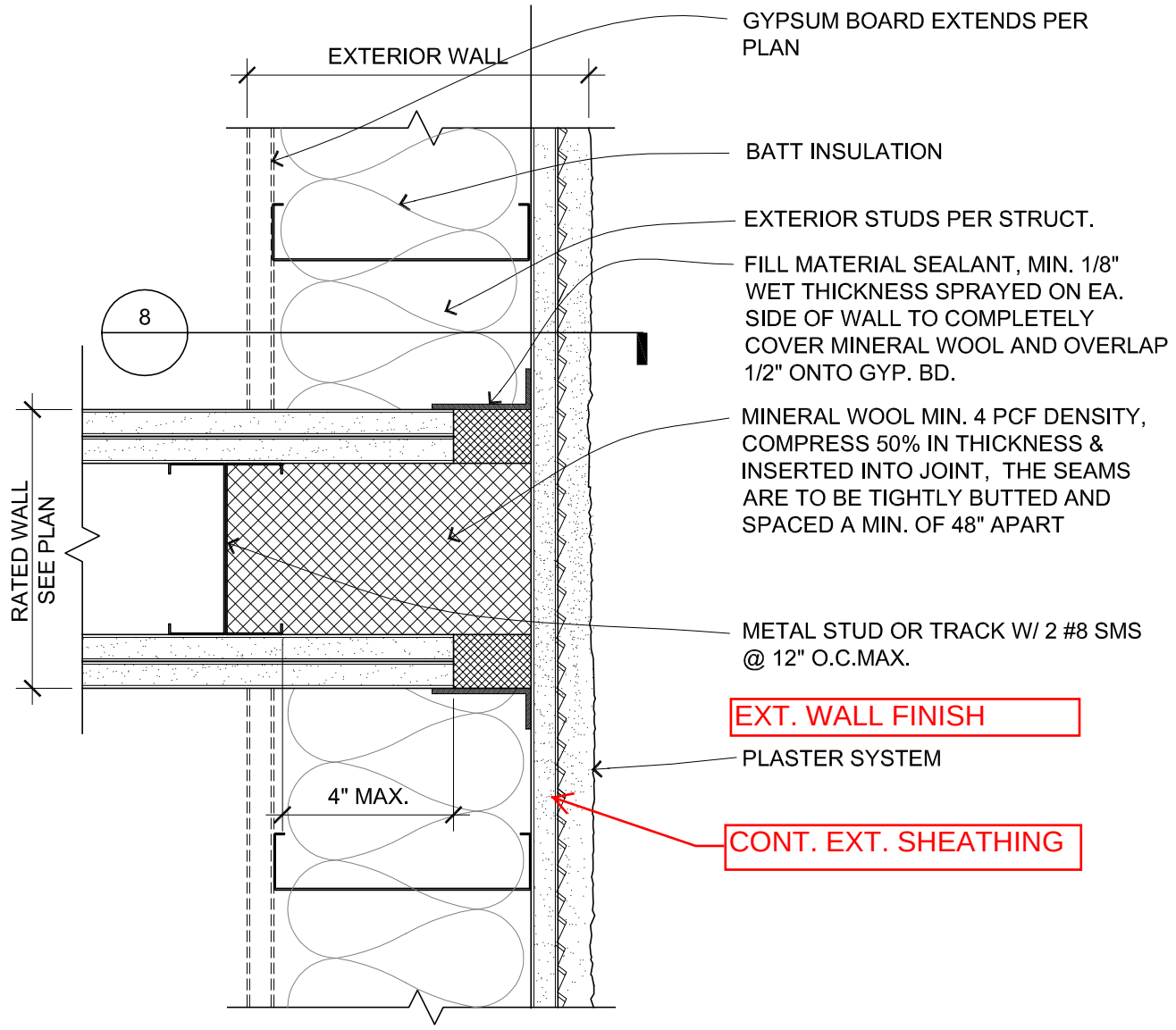

RATED INTERIOR WALL TERMINATION AT EXTERIOR WALL	
RATED_WALL_TERMINATION_AT_EXTERIOR_WALL.dwg	3" = 1'-0"

7/A9.0.05
KFMC HOS

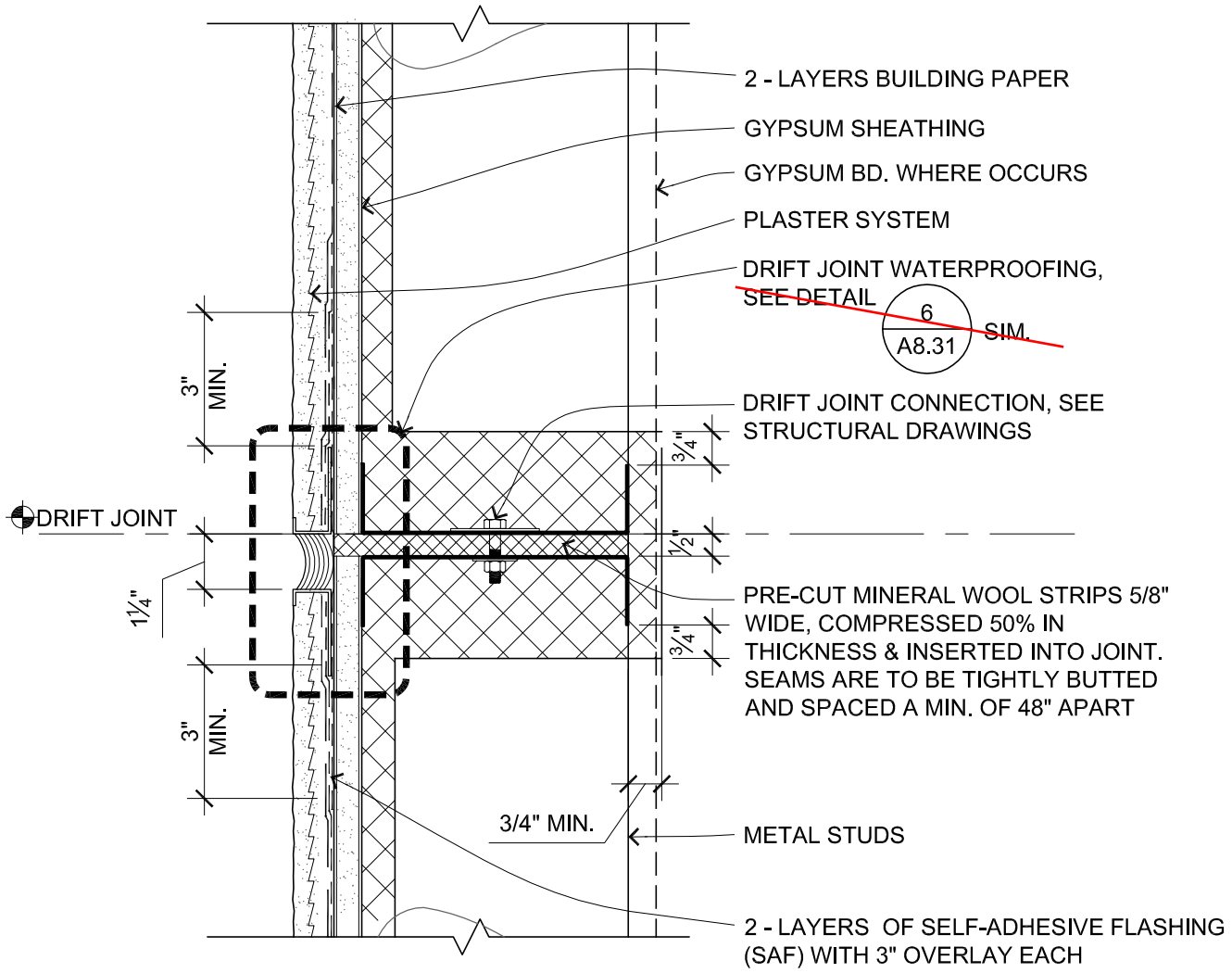

PLASTER DRIFT JOINT AT RATED INTERIOR WALL ?

3" = 1'-0"

8/A9.0.05
KFMC HOS

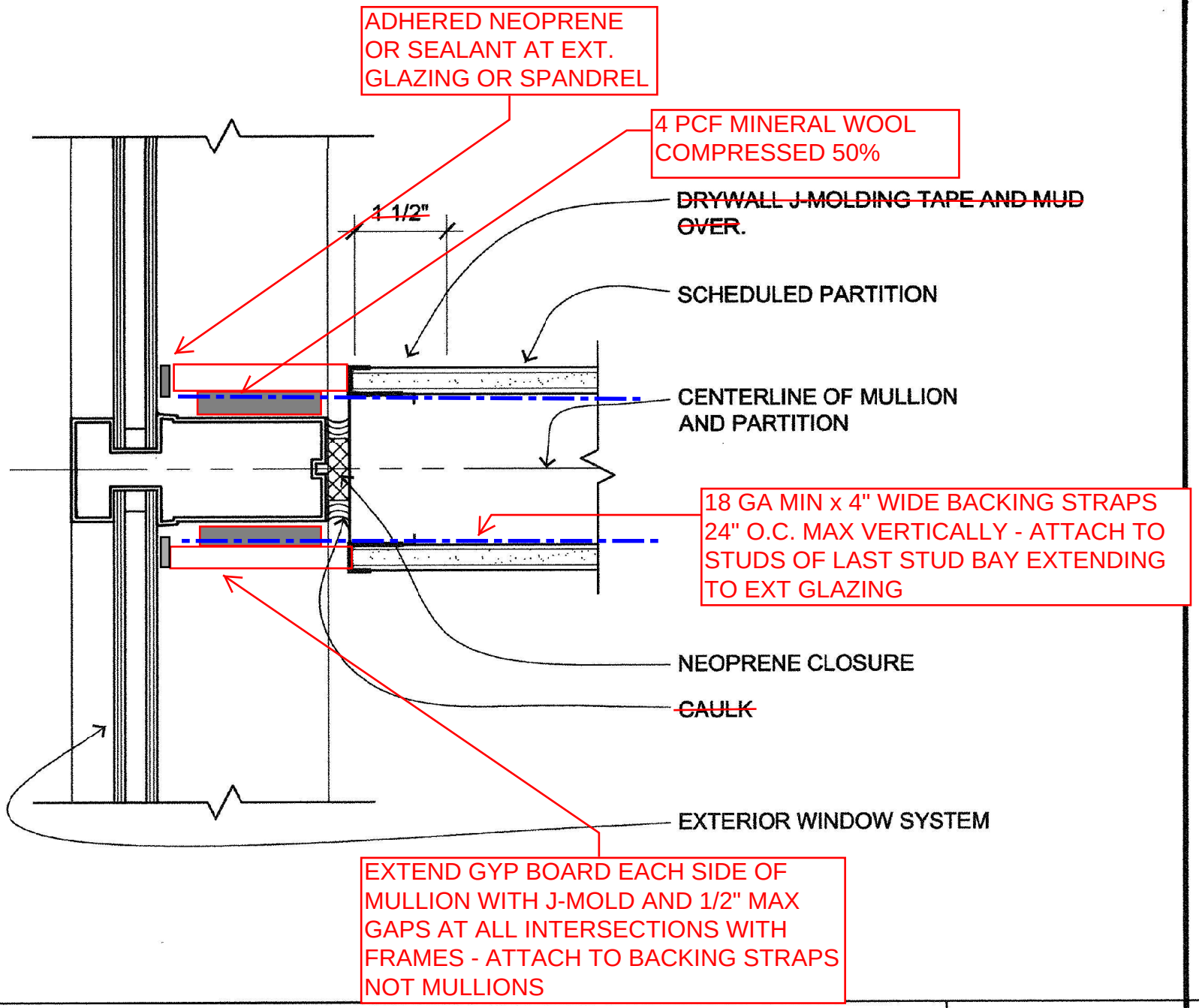

PARTITION AT EXTERIOR WINDOW	5
PART-EXT-WINDOW.dwg	3" = 1'-0"

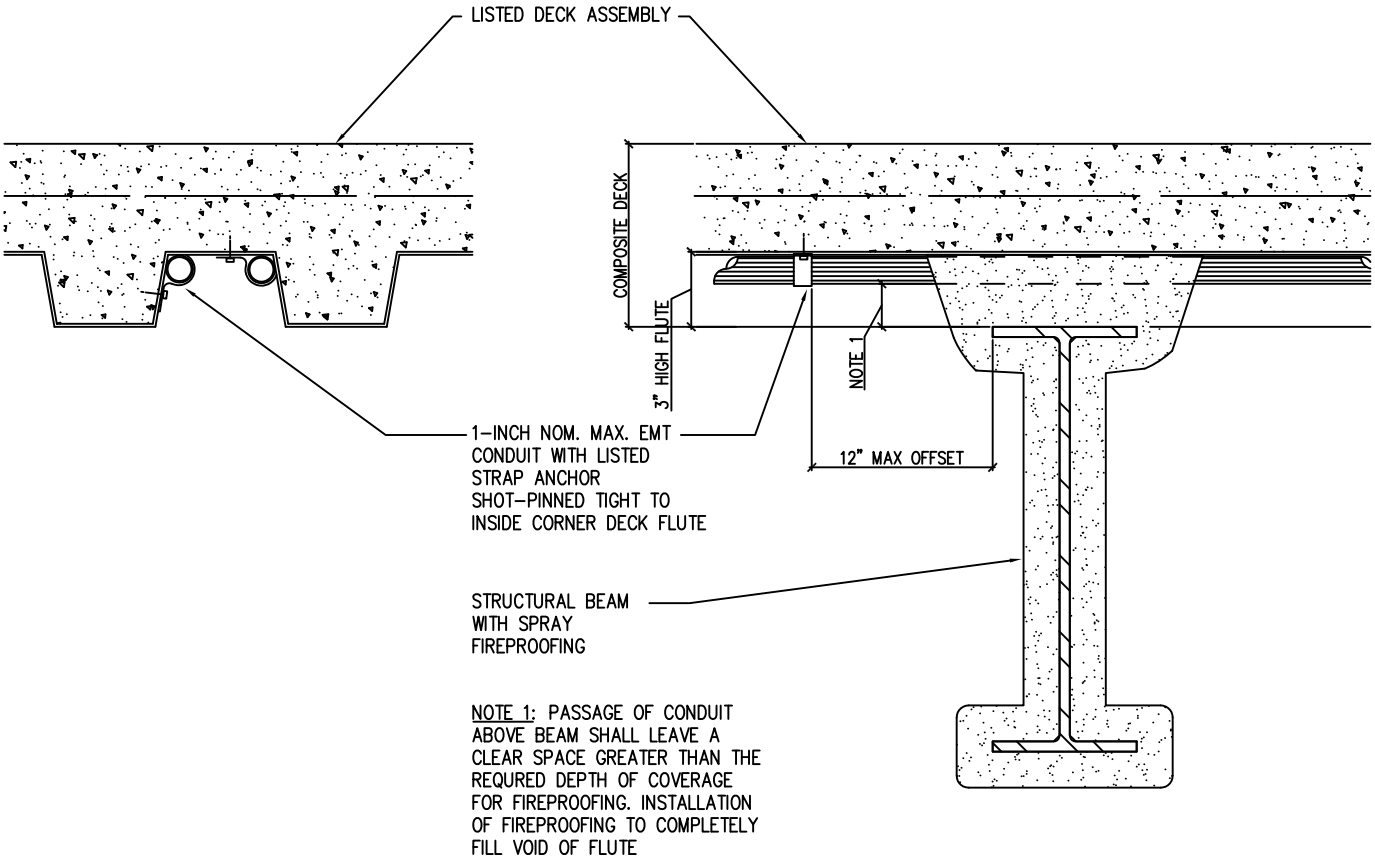

SECTION TITLE:

STANDARD FIRE RESISTIVE DETAILS

SHEET TITLE:

PENETRATION OF CONDUIT ABOVE PROTECTED BEAM ASSEMBLY

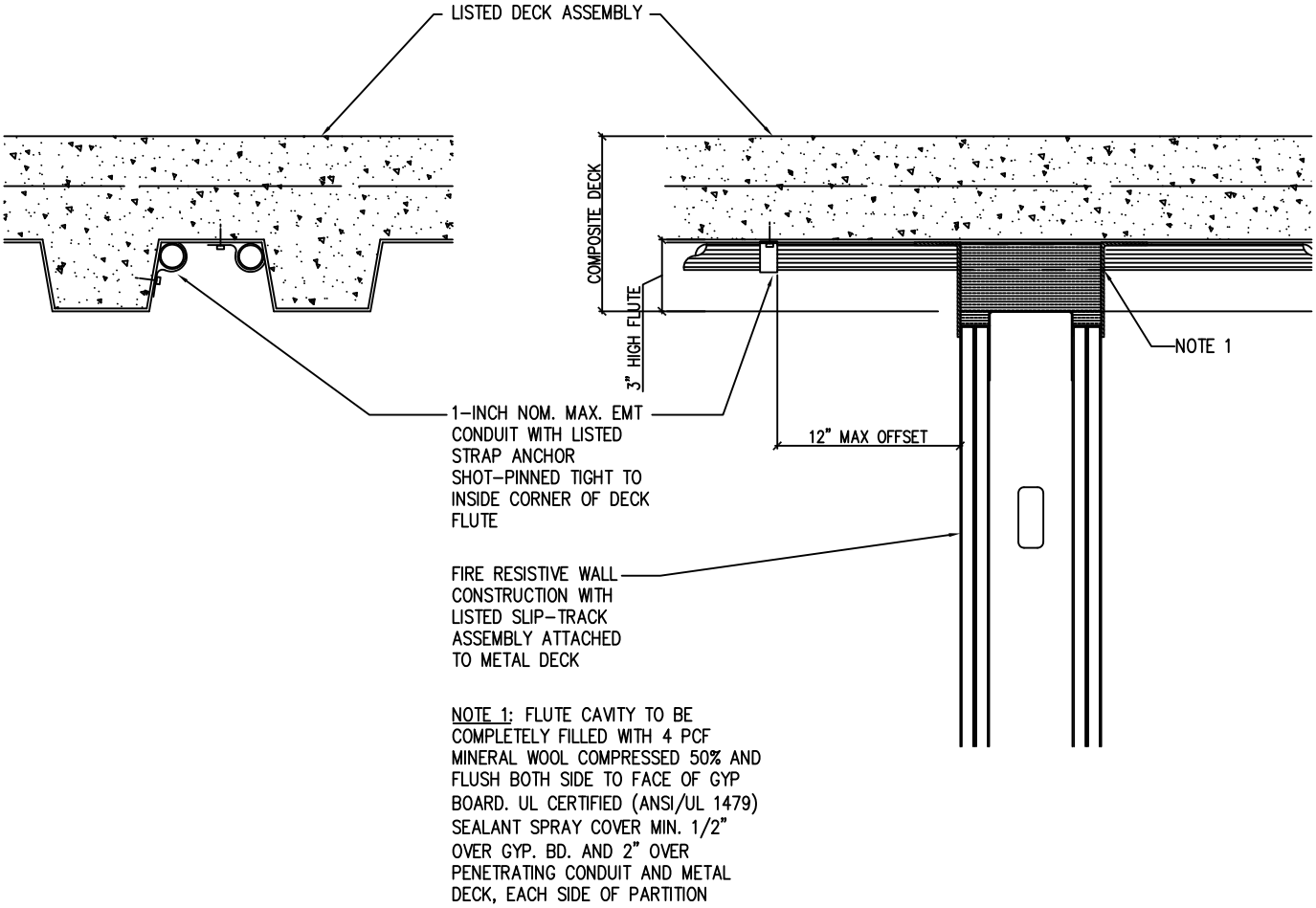

SECTION TITLE:

STANDARD FIRE RESISTIVE DETAILS

SHEET TITLE:

PENETRATION OF CONDUIT ABOVE FIRE RESISTIVE PARTITION HEAD-OF-WALL ASSEMBLY

oshpd Office of Statewide Health Planning and Development

Hospital Building Safety Board
400 R Street, Suite 200
Sacramento, California 95811-6213
(916) 440-8453
Fax (916) 324-9118
http://www.oshpd.ca.gov/Boards/HBSB/index.html

HOSPITAL BUILDING SAFETY BOARD
Standard Details Committee

Wednesday, February 19, 2014
10:00 a.m. - 4:00 p.m.

Office of Statewide Health Planning and Development
400 R Street, Suite 452
Sacramento, CA 95811
(916) 440-8453
and
Metropolitan Water District Headquarters
700 N. Alameda Street, Suite 2-546
Los Angeles, CA 90012
(213) 897-0166

Committee Members Present
Bert Hurlbut, Chair
Michael O'Connor, Vice-Chair
Rami Elhassan
Eric Johnson
Scott Karpinen
Bruce Macpherson
Arlee Monson
Mark Hershberg, Consulting Member
Kale Wisnia, Consulting Member

OSHPD Staff
Paul Coleman, FDD Deputy Director
Brett Beekman
Glenn Gall
Roy Lobo
Chris Tokas

HBSB Staff
Linda Janssen, Executive Director
Cathy Kane
Evett Torres

1. Welcome and Introductions

Committee Chair Bert Hurlbut brought the meeting to order. He invited the participants to introduce themselves.

Mr. Hurlbut welcomed Mr. Wisnia as a new Consulting Member.

2. Review the November 6, 2013 Meeting Report

Mr. Hurlbut went over the topics of the November 6 meeting. The focus had been the Acoustical Ceiling Details update from the 2010 version to the 2013 version. They are now part of the Standard Details package.

The committee had also discussed Standard Drywall Details and Fire Life Safety Details.

3. Standard Drywall Ceiling Program

Mr. Lobo reported that OSHPD had not received comments on the Standard Drywall Ceiling Program after November 20, so the details have now been posted on the website. Mr. Lobo had made some editorial changes.

Mr. Hurlbut stated that people had commented that some of the Standard Details are beyond what the code requires; this is the case, but many of the details are “best practices.” People can receive approval for code minimum as well.

Mr. Hershberg explained the details for the group.

- The Table of Contents includes two sets of General Notes.
- Several sheets of flowcharts explain the conditions that lead to the particular types of details.

- Requirements for fasteners may provide less capacity than the available proprietary fasteners or be otherwise conservative, but the idea is to give the least common denominator. Mr. Lobo pointed out a typo.
- Mr. Coleman stated that the new watermark indicates a pre-approved detail – OSHPD will know that the document came from the website.
- Mr. Lobo pointed out a mistake on page 19 for No. 8 Fastener Size. The same error occurs on Suspended Acoustic Ceiling Details.
- Mr. Hershberg stated that some details are actually specific to ceilings. Others illustrate suspension and bracing for different levels of seismic demand; the relationship between the suspended ceiling horizontal framing and the partition framing at the perimeters; how to splice horizontal members for construction; how the wire ties are accomplished; etc. Mr. Hershberg continued to explain individual details.
- Mr. Lobo suggested adding verbiage from the General Notes for Option 2 of CG4.31. The group agreed on additional changes to CG4.31 and CG4.32.
- Mr. Beekman had ideas regarding CG4.35 that he and the group discussed. Mr. Hershberg explained the 473 lb. ASD level for Mr. Lobo. The group then discussed deleting the third Note because it was in conflict with the second.
- Mr. Hershberg explained the details for obstructions.
- After the suspended details come the joisted ceiling details. The sheet numbers change from CG to CJ. This subset includes Suspended Gyp Board Ceiling General Notes.

Discussion and Public Input

Mr. Hurlbut asked about document control regarding revision dates. Mr. Lobo stated that revision dates appear at the bottom of each detail; people will have to check the website for the latest versions. The revisions have to do with clarification rather than changes.

In answer to a question from Mr. Elhassan, Mr. Hershberg said that PIN 51 states that drawings are still subject to Plan Review. In answer to another question, Mr. Hershberg said that there is no detail by detail comparison – a person must read the General Notes. Mr. Lobo said there are some locations where OSHPD has made changes from code based on common practice. However, the code is what ultimately governs. People don't have to use these details on their drawings, but the drawings will be subject to Plan Review.

4. Review Industry Comments Regarding Acoustical Ceilings

Mr. Hurlbut stated that Acoustical Ceilings have received a great number of comments. He wanted to ensure that all of the comments have all been vetted and discussed.

Mr. Hurlbut displayed the comments from Lamb Oxford, who was not present. Mr. Lobo addressed them; he noted that Mr. Karim had already responded to each comment individually. Mr. Lobo said that OSHPD would post its responses online.

5. Review the Draft Fire Life Safety Details

Mr. Monson said that the committee had already reviewed the Draft Fire Life Safety Details extensively at the previous meeting. He proceeded to go over some of the details.

- The Index references each of the details in the set.
- The Narratives follow the same format as the Ceiling Narratives and Wall Narratives except that they are more specific. There were no additional comments to this portion of the package.
- Mr. Monson continued that the General Flowcharts are set up for each of the categories.
- Detail FR1.00 sets the criteria for the “stuff and spray” at connection points on the flange. The Details that follow reference back to FR1.00, FR1.01, and FR1.02.
- FR1.10-FR1.17 are the various conditions where one-hour rated walls fit the fireproof columns.
- Mr. Hurlbut noted that these details affect every job undertaken – they are valuable.
- FR1.33 starts a series for exterior walls. Mr. Monson had corrections to this Detail.
- Mr. Monson and Mr. Wisnia felt that FR1.34 was problematic – it seemed to be generated for a particular site condition. An Interested Party explained that condition. Mr. Monson and Mr. Coleman decided to put the series under consideration.
- The next series concerned rated walls turning into glazing mullions. Wayne Campbell of KHS&S West Coast explained the series.

- Mr. Monson suggested setting criteria for conditions going down the wall – any obstructions in the vertical sense.
- Mr. Monson pointed out that other issues were movement, attachment of the sheetrock to the mullion itself, criteria of how to seal to the glass, and spacing with horizontal mullions between the slabs.
- The group agreed that Mr. Dunger's feedback was needed for this series.
- Mr. Campbell felt that a definition of *precast* was needed for FR1.40 and FR1.41.

- Mr. Monson said that the FR2 series concerns 2-hour conditions similar to the 1-hour conditions at the protected steel column flanges. Mr. Wisnia suggested showing the attachment of a screw with the condition of a furred wall up against a concrete wall.
- The FR3 series is for special conditions.
- FR3.01, the "5-Sided Box" detail, had previously been discussed at length. The group agreed to add a General Note about penetration.

Discussion and public input

An Interested Party suggested replacing the right side dashed line in FR3.07 with a solid line. He also suggested that Fire Stop Sealant to be added to the gyp board in FR3.08. The committee agreed to both changes.

Mr. Hurlbut stated that the committee would give the details to Mr. Dunger for his final review. Mr. Monson noted that the mullion details would need to have comments added, but Mr. Dunger could review them anyway.

Mr. Monson provided some additional details and comments:

- Rated Interior Wall Termination at Exterior Wall (two details). The first had already been discussed; the second needs more work.
- Plaster Drift Joint at Rated Interior Wall. After discussion, the group decided that it needs more work.
- Partition at Exterior Window. It is a new detail that Mr. Monson will send to OSHPD.
- Penetration of Conduit Above Protected Beam Assembly. It is new and has effectively been approved in the field.
- Penetration of Conduit Above Fire Resistive Partition Head-of-Wall Assembly. It is new.

Mr. Hurlbut proposed to send the set to Mr. Dunger; Mr. Monson said he would first talk to Mr. Campbell and then send them on. The ones Mr. Dunger signs off on will be posted; the rest will come back to the committee for further discussion.

6. Discuss Electrical Standard Details

Mr. Johnson stated that the electrical side does not get caught up too much in the details because much of what they do is custom. Mr. Johnson prefers to ask the plan reviewers about any consistent hang-ups they see.

He continued that many situations come down to OPDs and seismic. One common trip-up for IORs is flex connections between expansion joints. Fire penetrations are almost

always a challenge, usually with field conditions where the contractor did not pay attention.

Mr. Johnson sought to query industry partners and see what they can bring up.

Mr. Hurlbut asked about supporting conduit in major electrical rooms. Mr. Johnson responded that they often rely on skilled electricians for means and method. However, retrofits such as changing out an old switch with a new switch can create code problems.

Mr. Johnson noted that some of the standards aren't as much drawings as good practices. For example, color coding of the different branches speeds up plan review.

7. Comments from the Public/Board Members on Issues not on this Agenda

There were no further comments.

8. Adjournment

Mr. Hurlbut adjourned the meeting at 12:15 p.m.

oshpd Office of Statewide Health Planning and Development

Hospital Building Safety Board
400 R Street, Suite 200
Sacramento, California 95811-6213
(916) 440-8453
Fax (916) 324-9118
http://www.oshpd.ca.gov/Boards/HBSB/index.html

5/2/14

HOSPITAL BUILDING SAFETY BOARD
Standard Details Committee

MEETING NOTICE
Thursday, May 15, 2014
10:00 a.m. — 1:30 p.m.

at the
Office of Statewide Health Planning and Development
400 R Street, Suite 452
Sacramento, CA 95811
(916) 440-8453

And, at the
Metropolitan Water District Headquarters
700 N. Alameda Street, Suite 2-546
Los Angeles, CA 90012
(213) 897-0166

Board Members: Bert Hurlbut, Chair; Michael O'Connor, Vice-Chair; Rami Elhassan; Henry Huang; Eric Johnson; Scott Karpinen; Bruce Macpherson; Arlee Monson

Consulting Member: Mark Hershberg

OSHPD Staff: Brett Beekman; Roy Lobo

HBSB Staff: Linda Janssen, Executive Director; Cathy Kane; Evett Torres

MEETING AGENDA
NOTE: Agenda order is tentative and subject to change without prior notice. All times are approximate and subject to change. A 30-minute to one-hour lunch will be taken sometime during the day.

1. **Welcome and Introductions**

2. **Review the February 19, 2014 Meeting Report**
    - Discussion and public input

3. **Review the draft Fire Life Safety Details** — Arlee Monson
    - Discussion and public input

4. **Discuss MEP Standard Details** — Eric Johnson/Scott Karpinen
    - Discussion and public input

5. **Comments from the Public/Board Members on Issues not on this Agenda:** The Board will receive comments from the public/members at this time on matters not on the agenda. Matters raised at this time will be taken under consideration for placement on a subsequent agenda.

6. **Adjournment**

REMINDER: Please call (916) 440-8453 on Wednesday, May 14th, after 3:00 p.m. to confirm that the meeting will be taking place as scheduled. The recording will verify the meeting date and location.

NOTE: Meeting facilities and restrooms are accessible to the physically disabled. If any special accommodations (assistive listening device, sign language interpreter, etc.) are needed, please contact Board Staff at (916) 440-8453. Requests should be made as soon as possible but no later than 10 business days prior to the meeting.

Parking:
Sacramento—There are garages at 500 R Street and CalPERS Plaza. CalPERS Plaza has two entrances: one on Fifth Street, north of R Street; and another on Q Street, between Fourth and Fifth Streets. All three charge $1.25/hour or $12/day. There are also 10-hour parking meters around the perimeter of the building.
Los Angeles—There is valet service at the Metropolitan Water District Building that is available 8 am to 5 pm and they charge between $6 and $12. There is also Five Star Parking lot on Cesar Chavez Avenue and Alameda Street that charge $14/day or $2.00 every 20 minutes.

Questions? Call Board Staff at the above phone number.

2/18/2014 8:13:58 AM

2013 CBC FIRE-RESISTIVE STANDARD DETAILS

Issue Date : 02/18/2014	
Revision :	Date :

2/18/2014 8:14:14 AM

DRAWING INDEX	REVISIONS

FRX DRAWINGS INDEX, NARRATIVE AND FLOWCHARTS

FRX.00	DRAWING INDEX
FRX.01	DRAWING INDEX
FRX.10	NARRATIVE
FRX.11	NARRATIVE (CONT'D)
FRX.20	APPLICATION FLOWCHART – DEFINE PROJECT PARAMETERS AND APPLICABILITY
FRX.21	APPLICATION FLOWCHART – SELECT APPROPRIATE DETAILS FROM OPD
FRX.22	APPLICATION FLOWCHART – 1-HOUR RATED PARTITIONS, WALLS OR BARRIERS
FRX.23	APPLICATION FLOWCHART – 2-HOUR RATED PARTITIONS, WALLS OR BARRIERS
FRX.24	APPLICATION FLOWCHART – RATED WALL PENETRATIONS
FRX.25	RATED FLOOR/CEILING PENETRATIONS

FR0 GENERAL NOTES

FR0.00	GENERAL NOTES
FR0.01	GENERAL NOTES (CONT'D)
FR0.02	GRAPHICS LEGEND

FR1 INTERSECTION DETAILS FOR ONE-HOUR FIRE RESISITIVE PARTITIONS, WALLS AND BARRIERS

FR1.00	BASIC JOINT DETAILS FOR 1-HR-FR RATED WALL ASSEMBLIES - COMPOSITE
FR1.01	BASIC JOINT DETAILS FOR 1-HR-FR RATED WALL ASSEMBLIES - FACE JOINT
FR1.02	BASIC JOINT DETAILS FOR 1-HR-FR RATED WALL ASSEMBLIES - END JOINT
FR1.10	INTERSECTION OF 1-HR-FR PARTITION, WALL AND BARRIER AT PROTECTED COLUMN
FR1.11	INTERSECTION OF 1-HR-FR PARTITION, WALL AND BARRIER AT PROTECTED COLUMN
FR1.12	INTERSECTION OF 1-HR-FR PARTITION, WALL AND BARRIER AT PROTECTED COLUMN
FR1.13	INTERSECTION OF 1-HR-FR PARTITION, WALL AND BARRIER AT PROTECTED COLUMN
FR1.14	INTERSECTION OF 1-HR-FR PARTITION, WALL AND BARRIER AT PROTECTED COLUMN
FR1.15	INTERSECTION OF 1-HR-FR PARTITION, WALL AND BARRIER AT PROTECTED COLUMN
FR1.16	INTERSECTION OF 1-HR-FR PARTITION, WALL AND BARRIER AT PROTECTED COLUMN
FR1.17	INTERSECTION OF 1-HR-FR PARTITION, WALL AND BARRIER AT PROTECTED COLUMN
FR1.33	RATED INTERIOR WALL TERMINATION @ EXTERIOR WALL
FR1.34	RATED INTERIOR WALL TERMINATION @ EXTERIOR WALL
FR1.35	PARTITION TERMINATION @ GLAZING
FR1.36	PARTITION TERMINATION @ GLAZING
FR1.37	PARTITION TERMINATION @ STRUCTURAL MULLION
FR1.38	PARTITION TERMINATION @ STRUCTURAL MULLION - WRAPPED
FR1.39	PARTITION TERMINATION TO PRECAST
FR1.40	SHAFTWALL TERMINATION TO PRECAST

FR2 INTERSECTION DETAILS FOR TWO-HOUR FIRE RESISITIVE PARTITIONS, WALLS AND BARRIERS

FR2.00	BASIC JOINT DETAILS FOR 2-HR-FR RATED WALL ASSEMBLIES - COMPOSITE
FR2.01	BASIC JOINT DETAILS FOR 2-HR-FR RATED WALL ASSEMBLIES - FACE JOINT
FR2.02	BASIC JOINT DETAILS FOR 2-HR-FR RATED WALL ASSEMBLIES - END JOINT
FR2.10	INTERSECTION OF 2-HR-FR PARTITION, WALL AND BARRIER AT PROTECTED COLUMN
FR2.11	INTERSECTION OF 2-HR-FR PARTITION, WALL AND BARRIER AT PROTECTED COLUMN
FR2.12	INTERSECTION OF 2-HR-FR PARTITION, WALL AND BARRIER AT PROTECTED COLUMN
FR2.13	INTERSECTION OF 2-HR-FR PARTITION, WALL AND BARRIER AT PROTECTED COLUMN
FR2.14	INTERSECTION OF 2-HR-FR PARTITION, WALL AND BARRIER AT PROTECTED COLUMN
FR2.15	INTERSECTION OF 2-HR-FR PARTITION, WALL AND BARRIER AT PROTECTED COLUMN
FR2.16	INTERSECTION OF 2-HR-FR PARTITION, WALL AND BARRIER AT PROTECTED COLUMN
FR2.17	INTERSECTION OF 2-HR-FR PARTITION, WALL AND BARRIER AT PROTECTED COLUMN

Section Title : OSHPD FIRE RESISTIVE STANDARD DETAILS

OPD No: FRX.00

Sheet Title : DRAWING INDEX 1 OF 2

2/18/2014 8:24:45 AM

DRAWING INDEX		REVISIONS
FR3	**PENETRATION DETAILS FOR FIRE RESISTIVE RATED GYPSUM BOARD ASSEMBLIES**	
FR3.00	NOT USED	
FR3.01	RECESSED M.E.P. CABINET IN RATED PARTITION	
FR3.02	HOLLOW METAL DOOR FRAME AT 1-HOUR RATED WALL	
FR3.03	HOLLOW METAL DOOR FRAME AT 2-HOUR RATED WALL	
FR3.04	RATED WALL CONTROL JOINT DETAILS	
FR3.05	RATED WALL CONTROL JOINT DETAILS	
FR3.06	RATED WALL BLOW-OUT PATCH AT PENETRATIONS	
FR3.07	PENETRATION REPAIR AT TOP OF WALL	
FR3.08	SHAFTWALL AT INTERMEDIATE BEAM	
FR4	**PENETRATIONS DETAILS FOR OF RATED FLOOR/CEILING ASSEMBLIES**	
FR4.00	NOT USED	
FR4.01	FLOOR SLAB PENETRATION AT WATER CLOSET WASTE LINE	
FR4.02	VERTICAL DUCT SHAFT BOTTOM DETAILS	

Section Title : OSHPD FIRE RESISTIVE STANDARD DETAILS

OPD No:

Sheet Title :
DRAWING INDEX 2 OF 2

FRX.01

NARRATIVE

2013 California Building Code (2013 CBC) Fire Resistive Details document contains OSHPD Pre-Approved Details (OPD), which may be incorporated into construction documents. These details have been reviewed for compliance with the 2013 CBC and, when used as shown, without modifications, are deemed to comply with code. They are intended to cover common conditions that occur on many projects. It is anticipated that use of these details will facilitate the design, review, and construction process.

The Narrative and supporting Flowchart, which follows the Narrative, are provided to assist in selecting applicable details from the OPD for incorporation into the construction documents. It is to be used only as a guide and does not provide complete step-by-step instructions for use of the OPD. Narrative comment numbers correspond to the numbered items on the Flowchart.

The following steps apply to use of OPD:

1.Define Project Parameters

A .Construction Classification by Type of Construction.

i. The Registered Design Professional (RDP) in responsible charge shall identify the minimum requirements for the fire resistance ratings of building elements, based on the provisions of Chapter 6 of the CBC.

B. Coordination with Primary Structural Elements.

i. The RDP in responsible charge shall identify with the Structural Engineer of Record (SEOR) the primary structural elements and the methods for providing the required fire protection in compliance with CBC Table 601.

ii. The RDP in responsible charge shall identify and coordinate the project conditions where primary structural elements and architectural and MEP systems may be in conflict.

C.Coordination of Non-structural Building Elements.

i. The RDP in responsible charge shall identify the non-structural building elements to be constructed and their compliance to the requirements of Chapter 7, *Fire and Smoke Protection Features,* of the CBC, for the specific use within the project.

ii. The RDP in responsible charge shall identify the unique conditions which apply to the use of the OPD under consideration.

2. Verify Applicability of the OPD
(refer to PIN 51)

A. The OPD's allow design professionals to incorporate pre-approved details into their project construction documents when they satisfy the following conditions.

i. The RDP in responsible charge determines the applicability of the OPD for the specific project conditions, and the project specific details for those conditions may not otherwise be met by tested and listed assemblies of the manufacturer's products specified.

ii. The OPD details must be directly applicable to the project conditions, without modification.

Section Title : OSHPD FIRE RESISTIVE STANDARD DETAILS			OPD No:
Sheet Title : NARRATIVE - PAGE 1 OF 3			FRX.10

B. Substitutions of items shown in the OPD are not permitted, unless specifically allowed by the OPD itself.

C. Changes to the OPD to accommodate variations of the project conditions are not permitted. In such cases, project specific details are required.

2. Verify Applicability of the OPD
(refer to PIN 51)

A. The OPD's allow design professionals to incorporate pre-approved details into their project construction documents when they satisfy the following conditions.

i. The RDP in responsible charge determines the applicability of the OPD for the specific project conditions, and the project specific details for those conditions may not otherwise be met by tested and listed assemblies of the manufacturer's products specified.

ii. The OPD details must be directly applicable to the project conditions, without modification.

B. Substitutions of items shown in the OPD are not permitted, unless specifically allowed by the OPD itself.

C. Changes to the OPD to accommodate variations of the project conditions are not permitted. In such cases, project specific details are required.

3. Select Appropriate Details from OPD

A. Review the OPD General Notes before the start of the OPD selection process. The General Notes provide detailed specifications of the materials and the workmanship associated with the details. The RDP in responsible charge shall confirm the applicability of the OPD details and the specifications noted in this section.

B. The protection of primary structural elements of the project shall not be compromised. Details indicating connections of miscellaneous framing to primary steel shall have protective construction (i.e. spray fireproofing) replaced as acceptable to manufacturer and OSHPD.

C. Non-structural partitions of fire resistive construction shall comply with approved tested assemblies, listed by accepted testing agencies.

D. Select the type of condition which the detail needs to address – intersection of fire-resistive assemblies or penetrations of fire resistive assemblies.

E. For Intersections of fire-resistive assemblies, select the applicable fire-resistive rating for the partition components of the detail.

i. One-hour fire resistive details begin with sheet FR1.00, and Two-hour fire resistive details begin with sheet FR2.00.
ii. Select the condition for the type of intersection – intersections with protected columns begin with detail FR1.10 or FR2.10; intersections with rated floor/roof decks begin with FR1.20 and FR2.20; intersections with exterior wall construction begin with FR1.30 and FR2.30.
iii. Select the appropriate detail based on the particular detail condition, e.g. column orientation, adjacent wall construction, etc.

Section Title : OSHPD FIRE RESISTIVE STANDARD DETAILS			OPD No:
Sheet Title : NARRATIVE - PAGE 2 OF 3			FRX.11

F. For Penetrations of fire-resistive assemblies, select the type of components to be detailed.

i. Select details by type of component penetrating rated assembly, e.g. shaft enclosure, ductwork, piping, fixture, etc.
ii. Select detail appropriate to the specific field condition.

4. Implementation and Use of OPD During Plan Review

Refer to PIN 51.

5. Implementation and Use of OPD During Construction Process

Refer to PIN 51.

A. During construction, OPD's are treated as any other detail in the approved documents.

B. Pre-approved details submitted after the construction documents have been approved and a building permit has been issued shall be used and/or processed in accordance with Code Application Notice 2 -107.4 "Amended Construction Documents." Pre-approved details may be applied as alternates to the approved details shown on the permitted construction documents only on a one for one basis and with written consents of the registered design professional and the registered design professional in responsible charge and in concurrence incorporated without any modification. Pre-approved details are subject to field confirmation during which the applicability of pre-approved details for specific project conditions shall be evaluated.

C. Changing the scope of a project (adding additional space to the construction area or modifying the spaces of the original design, for example) does constitute a "material alteration" to the project, even if OPD can be used for all conditions. In such a case, an Amended Construction Document must be submitted to OSHPD field staff for review.

Section Title : OSHPD FIRE RESISTIVE STANDARD DETAILS			OPD No:
Sheet Title : NARRATIVE - PAGE 3 OF 3			FRX.12

2/18/2014 8:14:15 AM

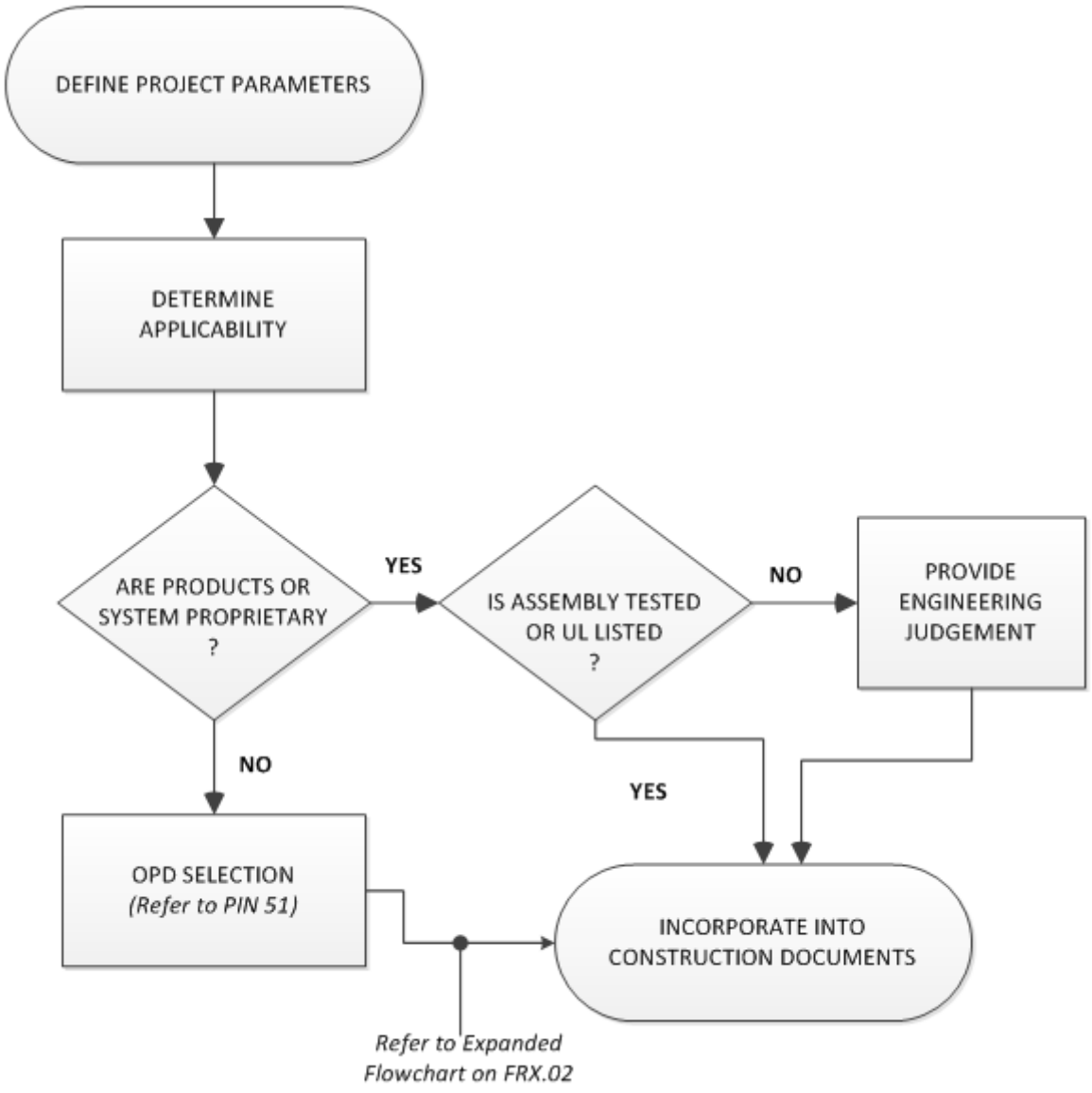

Section Title : OSHPD FIRE RESISTIVE STANDARD DETAILS	OPD No:
Sheet Title : APPLICATION FLOWCHART - OVERVIEW OF OPD USE	FRX.20

2/18/2014 8:14:15 AM

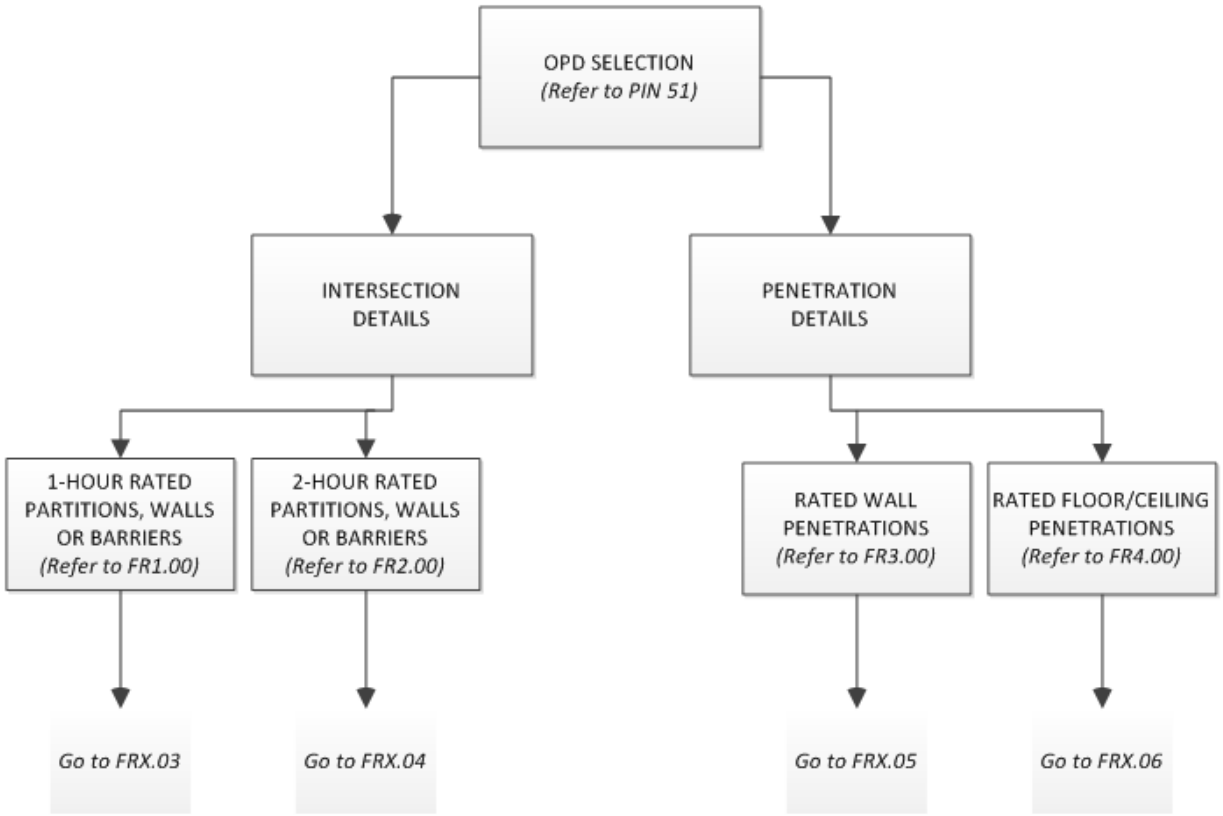

Section Title : OSHPD FIRE RESISTIVE STANDARD DETAILS	OPD No:
Sheet Title : APPLICATION FLOWCHART - OPD SELECTION	FRX.21

2/18/2014 8:14:15 AM

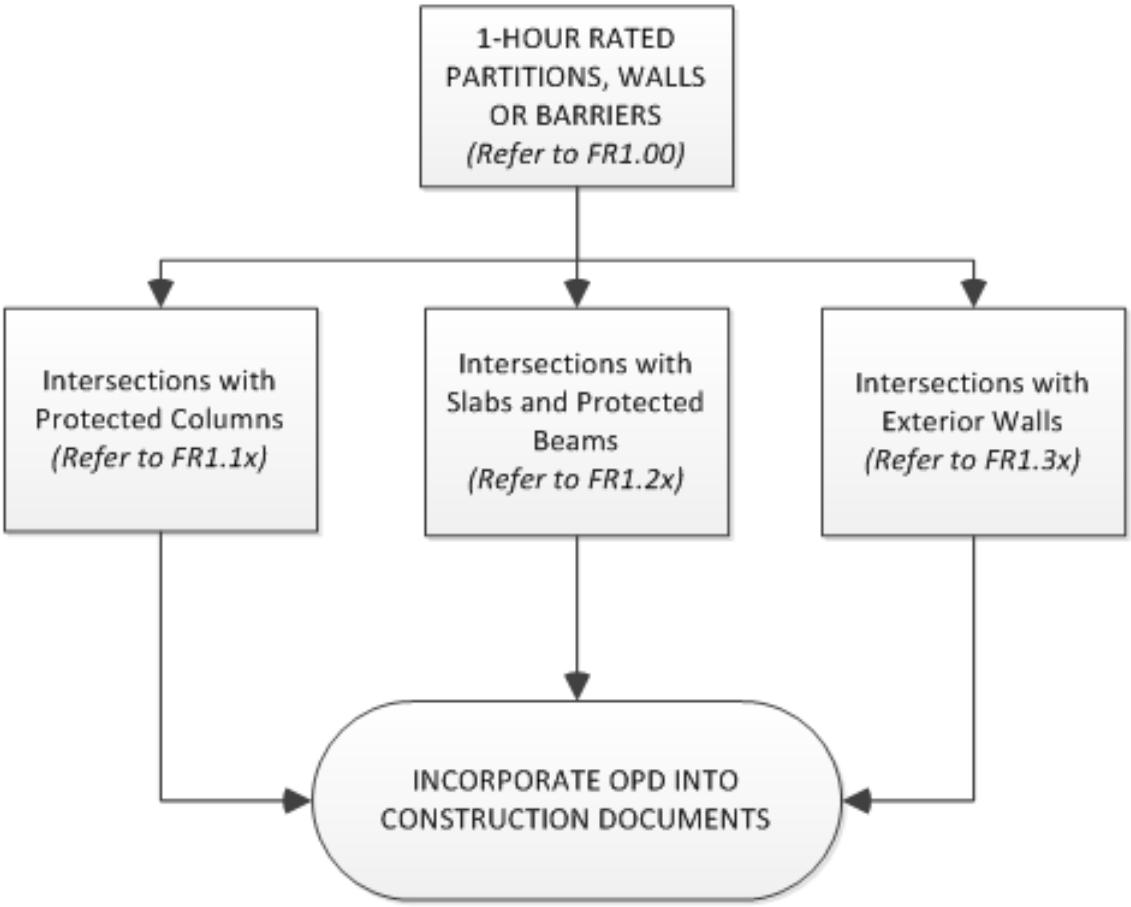

Section Title : OSHPD FIRE RESISTIVE STANDARD DETAILS	OPD No:
Sheet Title : APPLICATION FLOWCHART - RATED PARTITIONS, WALLS, AND BARRIERS	FRX.22

2/18/2014 8:14:16 AM

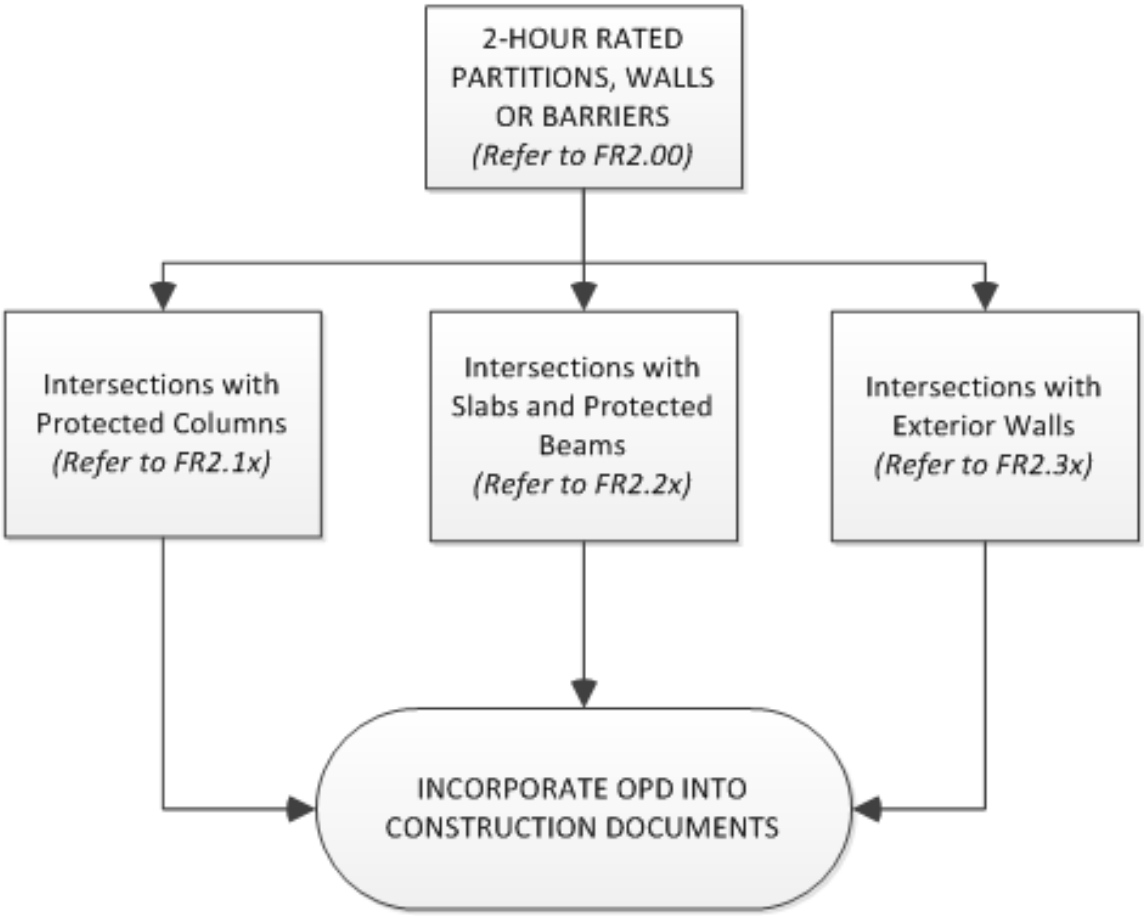

Section Title : OSHPD FIRE RESISTIVE STANDARD DETAILS	OPD No:
Sheet Title : APPLICATION FLOWCHART - RATED PARTIONS, WALLS, AND BARRIERS	FRX.23

2/18/2014 8:14:16 AM

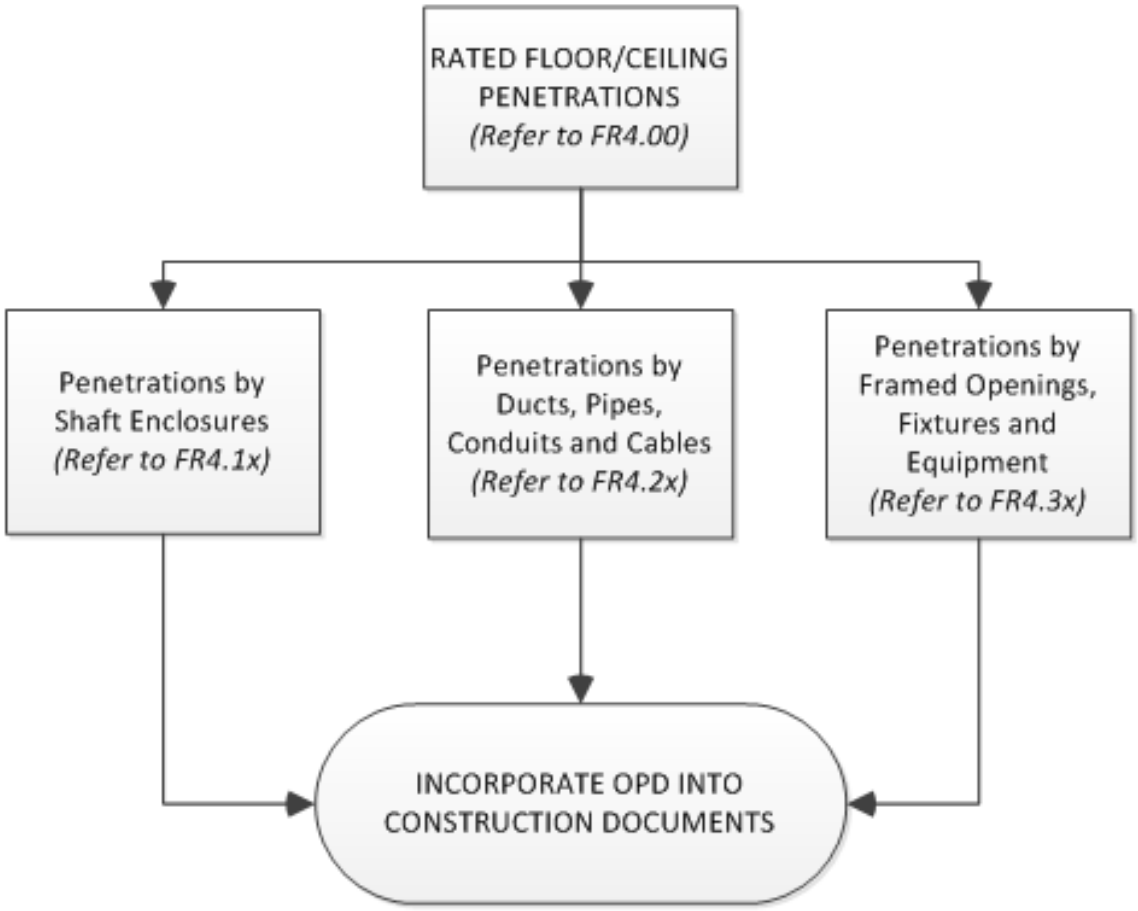

Section Title : OSHPD FIRE RESISTIVE STANDARD DETAILS	OPD No:
Sheet Title : APPLICATION FLOWCHART - RATED CEILING DETAILS	FRX.24

2/18/2014 8:14:16 AM

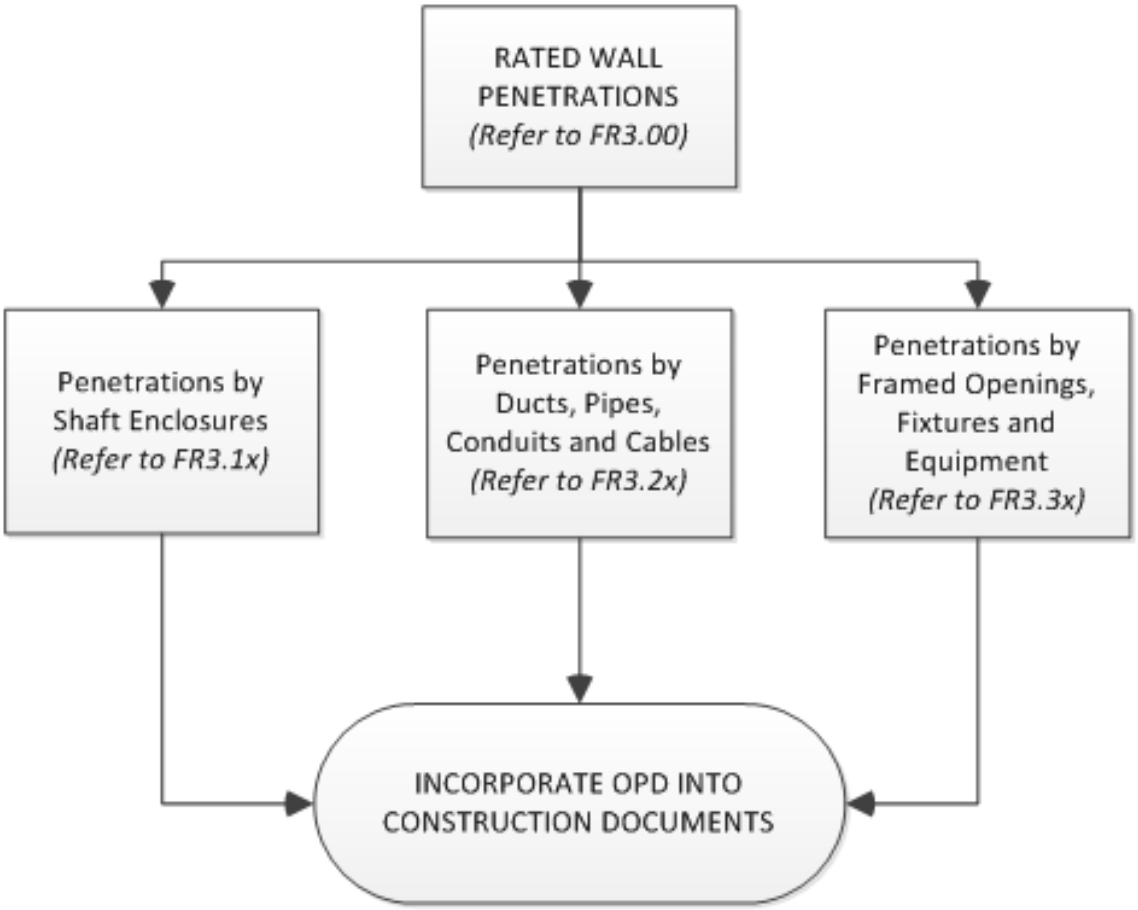

Section Title : OSHPD FIRE RESISTIVE STANDARD DETAILS	OPD No:
Sheet Title : APPLICATION FLOWCHART - RATED PENETRATIONS	FRX.25

2/18/2014 8:13:58 AM

GENERAL NOTES

1. CONSTRUCTION, WORKMANSHIP AND MATERIAL SHALL CONFORM TO THE 2013 CALIFORNIA BUILDING CODE (CBC 2013).

2. THE CONTRACTOR SHALL NOTIFY OSHPD AND THE REGISTERED DESIGN PROFESSIONL (RDP) IN RESPONSIBLE CHARGE WHERE A CONFLICT OR DISCREPANCY OCCURS BETWEEN THE CONSTUCTION DRAWINGS AND ANY OTHER PORTION OF THE CONTRACT DOCUMENTS, FIELD CONDITIONS, OR WHERE ANY CONDITIONS ARISE NOT COVERED BY THESE DOCUMENTS WHEREIN WORK WILL NOT COMPY WITH CODE REQUIREMENTS.

3. THE INTENT OF THE DRAWINGS AND SPECIFICATIONS IS TO CONSTRUCT THE HOSPITAL BUILDING IN ACCORDANCE WITH THE CALIFORNIA BUILDING STANDARD CODE, 2013 (CBSC 2013). SHOULD ANY CONDITION DEVELOP NOT COVERED BY THE APPROVED CONSTRUCTION DOCUMENTS WHEREIN THE WORK WILL NOT COMPLY WITH CBSC 2013, A CHANGE ORDER DETAILING AND SPECIFYING THE REQUIRED WORK SHALL BE SUBMITTED TO AND APPROVED BY OSHPD BEFORE PROCEEDING WITH THE WORK.

4. THE FIRE-RESISTANCE RATING OF BUILDING ELEMENTS, COMPONENT OR ASSEMBLIES SHALL BE DETERMINED IN ACCORDANCE WITH ASTM E 119 OR UL 263 OR IN ACCORDANCE WITH CBC SECTION 703.3.

5. WHERE FIRE RESISTIVE PARTITIONS, WALLS AND BARRIERS ARE CONSTRUCTED OF GYPSUM BOARD TO MEET THE FIRE AND SMOKE PROTECTION FEATURES IN ACCORDANCE WITH CBC CHAPTER 7, THEY SHALL MEET THE REQUIREMENTS OF THE FOLLOWING:

   i. THE DOCUMENTED REQUIREMENTS OF TESTING AND LISTING AGENCIES FOR MANUFACTURER'S PROPRIETARY MATERIALS AND CONSTRUCTION METHODS AS SHOWN IN THE TEST REPORT – E.G. UNDERWRITERS LABORATORIES, INTERTEK'S WARNOCK-HERSEY, ETC., OR

   ii. THE GENERIC FILE NUMBERS OF WALLS AND INTERIOR PARTITIONS DOCUMENTED IN THE GYPSUM ASSOCIATION'S PUBLICATION, "FIRE RESISTANCE DESIGN MANUAL, OR

   iii. HE GENERIC CONSTRUCTION ITEMS LISTED IN CBC TABLE 720.1(2) FOR WALLS AND PARTITIONS.

6. WHERE STRUCTURAL MEMBERS ARE PROTECTED WITH SPRAYED FIRE-RESISTANT MATERIALS (SFRM) THEY SHALL MEET THE FIRE RESISTANCE RATING REQUIREMENTS OF SECTION 704 OF THE CBC AND THE FOLLOWING:

   i. THE DOCUMENTED REQUIREMENTS OF TESTING AND LISTING AGENCIES FOR MANUFACTURER'S PROPRIETARY MATERIALS AND CONSTRUCTION METHODS AS SHOWN IN THE TEST REPORT – E.G. UNDERWRITERS LABORATORIES, INTERTEK'S WARNOCK-HERSEY, ETC.

7. WHERE STRUCTURAL MEMBERS ARE PROTECTED WITH OTHER NON-COMBUSTIBLE INSULATING MATERIALS, THEY SHALL MEET THE FIRE RESISTANCE RATING REQUIREMENTS OF SECTION 704 OF THE CBC AND THE FOLLOWING:

   i. THE GENERIC CONSTRUCTION ITEMS LISTED IN CBC TABLE 720.1(1) FOR MINIMUM PROTECTION OF STRUCTURAL PARTS.

Section Title : OSHPD FIRE RESISTIVE STANDARD DETAILS			OPD No:
Sheet Title : GENERAL NOTES PAGE 1 OF 2			FR0.00

2/18/2014 8:13:58 AM

8. STRUCTURAL DECKS SHALL BE CONSTRUCTED TO MEET THE REQUIREMENTS OF RATED HORIZONTAL ASSEMBLIES IN ACCORDANCE WITH CBC SECTION 712, AND SHALL MEET THE REQUIREMENTS OF THE FOLLOWING:

   i. THE DOCUMENTED REQUIREMENTS OF TESTING AND LISTING AGENCIES FOR MANUFACTURER'S PROPRIETARY MATERIALS AND CONSTRUCTION METHODS AS SHOWN IN THE TEST REPORT – E.G. UNDERWRITERS LABORATORIES, INTERTEK'S WARNOCK-HERSEY, ETC., OR
   ii. THE GENERIC CONSTRUCTION ITEMS LISTED IN CBC TABLE 720.1(3) FOR MINIMUM PROTECTION OF FLOOR AND ROOF SYSTEMS.

9. THE RDP IN RESPONSIBLE CHARGE SHALL VERIFY THAT THE USE OF THE OPD IN PROVIDING AN ACCEPTABLE FIRE RESISTIVE RATING FOR SPECIFIC CONDITIONS, WILL ALSO MEET ANY ACOUSTICAL CRITERIA THAT MAY OTHERWISE BE REQUIRED BY THE PROJECT DESIGN CRITERIA.

10. INDIVIDUAL DETAILS WITHIN THIS OPD TYPICALLY RELY UPON OTHER DETAILS FOR INFORMATION ESSENTIAL TO THEIR APPLICATION. OPD'S ARE TO BE USED IN CONJUNCTION WITH ALL RELATED, APPLICABLE DETAILS WITHIN THIS OPD PACKAGE INCLUDING THE GENERAL NOTES.

11. OPD PROVIDE OPTIONS FOR SOME COMPONENTS, SUCH AS FRAMING MEMBER SIZES, FASTENERS, ETC. THE RDP IN RESPONSIBLE CHARGE SHALL CLEARLY IDENTIFY ALL COMPONENTS SELECTED FOR USE IN THE PROJECT-SPECIFIC CONDITIONS.

Section Title : OSHPD FIRE RESISTIVE STANDARD DETAILS			OPD No:
Sheet Title : GENERAL NOTES PAGE 2 OF 2			FR0.01

2/18/2014 8:13:58 AM

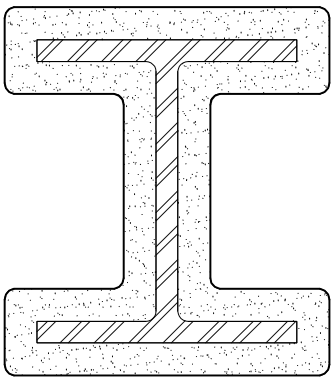

STRUCTURAL STEEL COLUMN W/ SPRAY APPLIED FIREPROOFING. REFER STRUCTURAL DRAWINGS

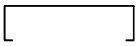

COLD FORMED METAL STUD. REFER ARCHITECTURAL DRAWINGS FOR WALL TYPE.

COLD FORMED SHAFT STUD. REFER ARCHITECTURAL DRAWINGS FOR WALL TYPE.

GYPSUM BOARD. REFER ARCHITECTURAL DRAWINGS FOR WALL TYPE.

COMPRESSED MINERAL WOOL

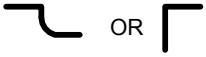

FIRE SEALANT

Section Title : OSHPD FIRE RESISTIVE STANDARD DETAILS		OPD No:
Sheet Title : GRAPHICS LEGEND		FR0.02

2/18/2014 8:13:58 AM

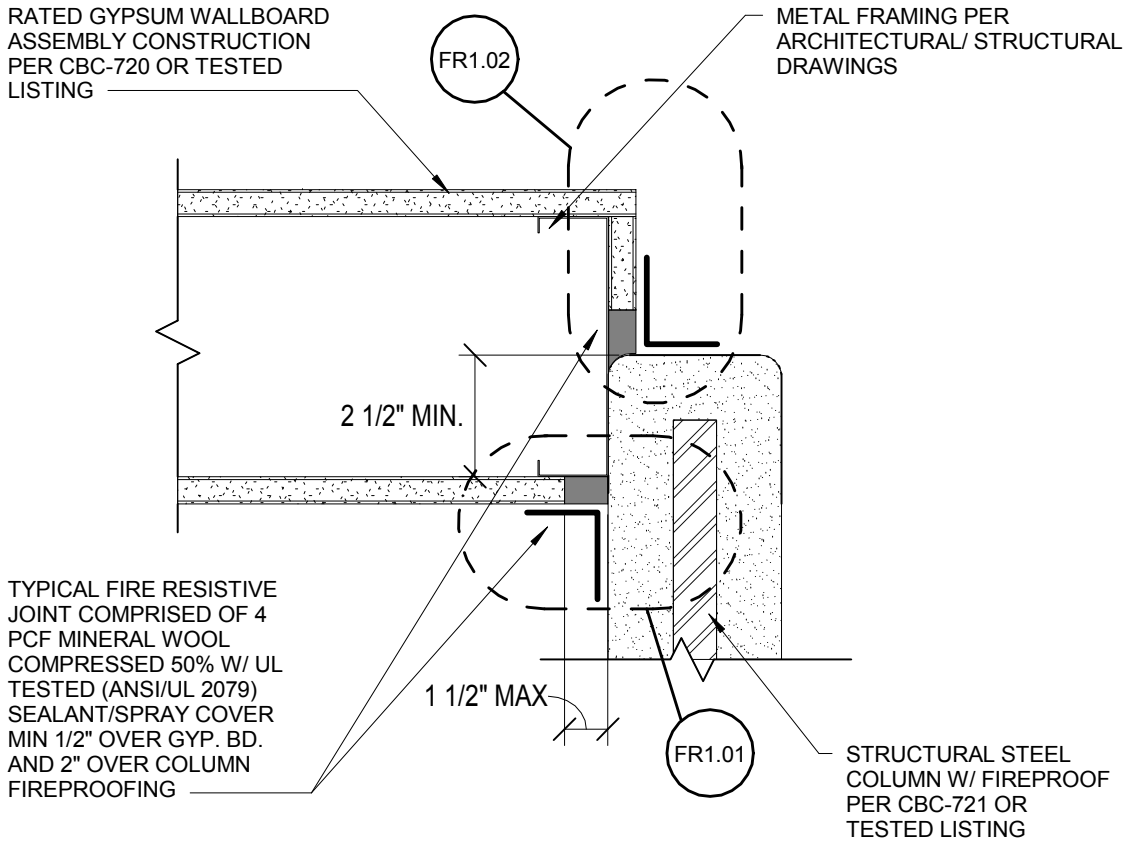

Section Title : OSHPD FIRE RESISTIVE STANDARD DETAILS		OPD No:
Sheet Title : BASIC JOINT DETAIL FOR 1-HR-FR RATED WALL ASSEMBLIES - COMPOSITE @ JOINTS		FR1.00

2/18/2014 8:13:59 AM

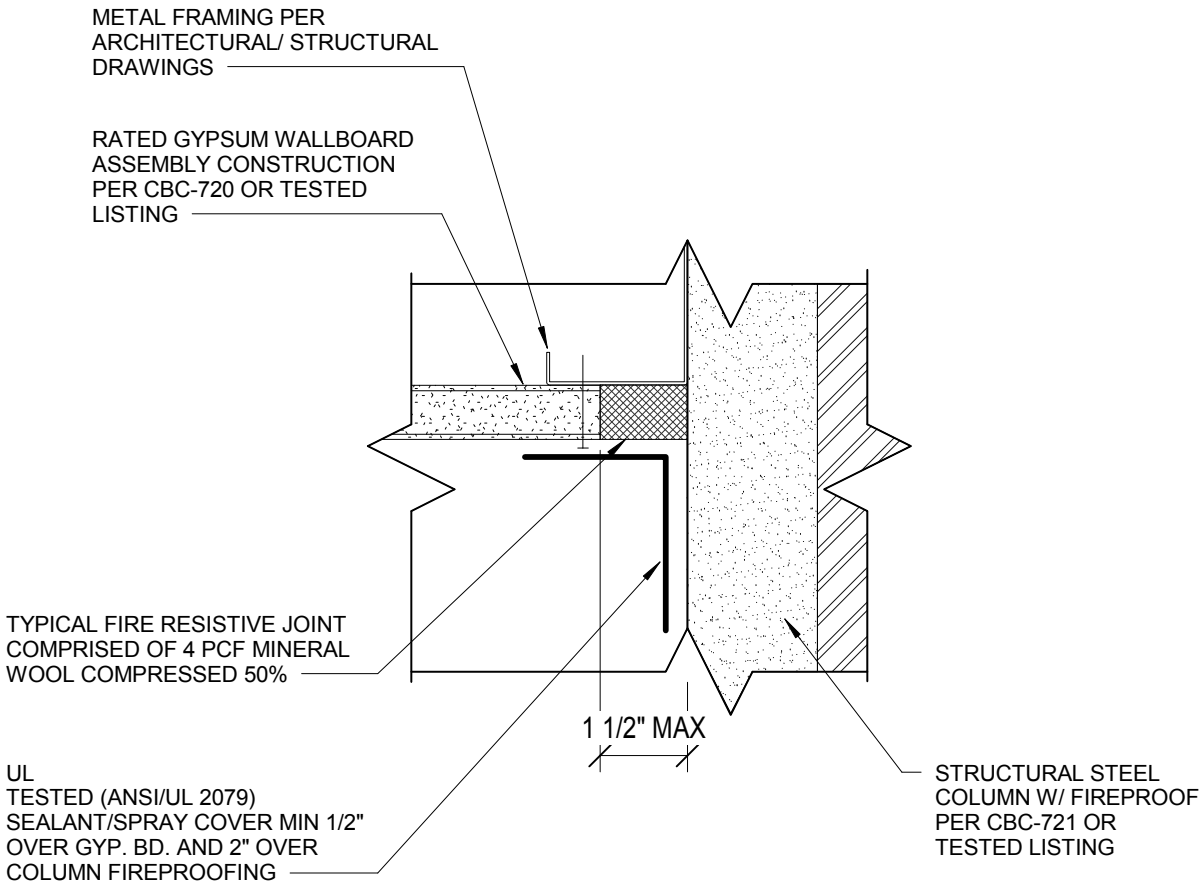

NOTES:
1. MAXIMUM SEPARATION BETWEEN SIDE OF GYPSUM WALLBOARD AND FACE OF FIREPROOFING IS 1 1/2".
2. THE FIRE RESISTIVE RATING OF STEEL COLUMN MUST BE EQUAL OR GREATER THAN WALL RATING.
3. "WET" THICKNESS OF SEALANT TO BE MIN. 1/8" TESTED IN ACCORDANCE WITH ASTM E1966 (ANSI/UL 2079).

Section Title : OSHPD FIRE RESISTIVE STANDARD DETAILS		OPD No:
Sheet Title : BASIC JOINT DETAIL FOR 1-HR-FR RATED WALL ASSEMBLIES - FACE JOINT		FR1.01

2/18/2014 8:13:59 AM

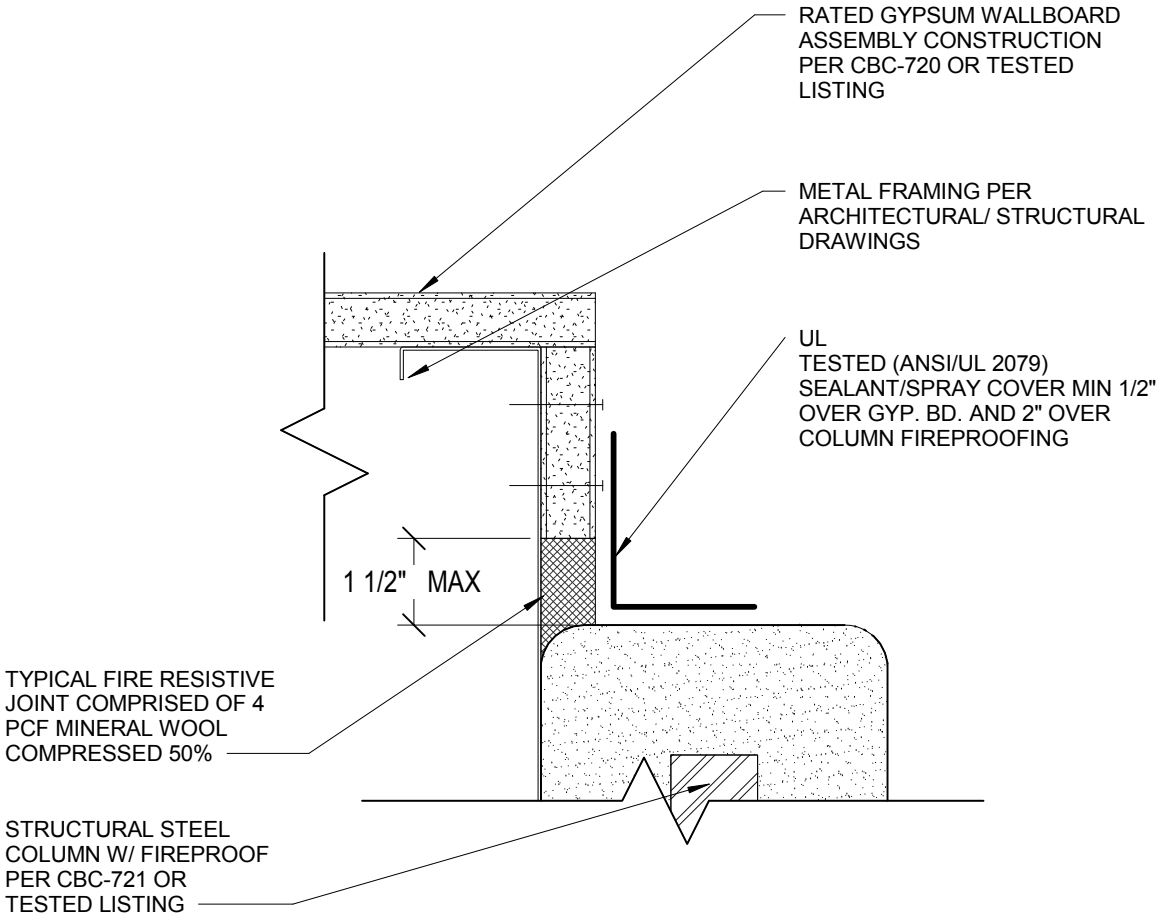

Section Title : OSHPD FIRE RESISTIVE STANDARD DETAILS	OPD No:
Sheet Title : BASIC JOINT DETAIL FOR 1-HR-FR RATED WALL ASSEMBLIES - END JOINT	FR1.02

2/18/2014 8:13:59 AM

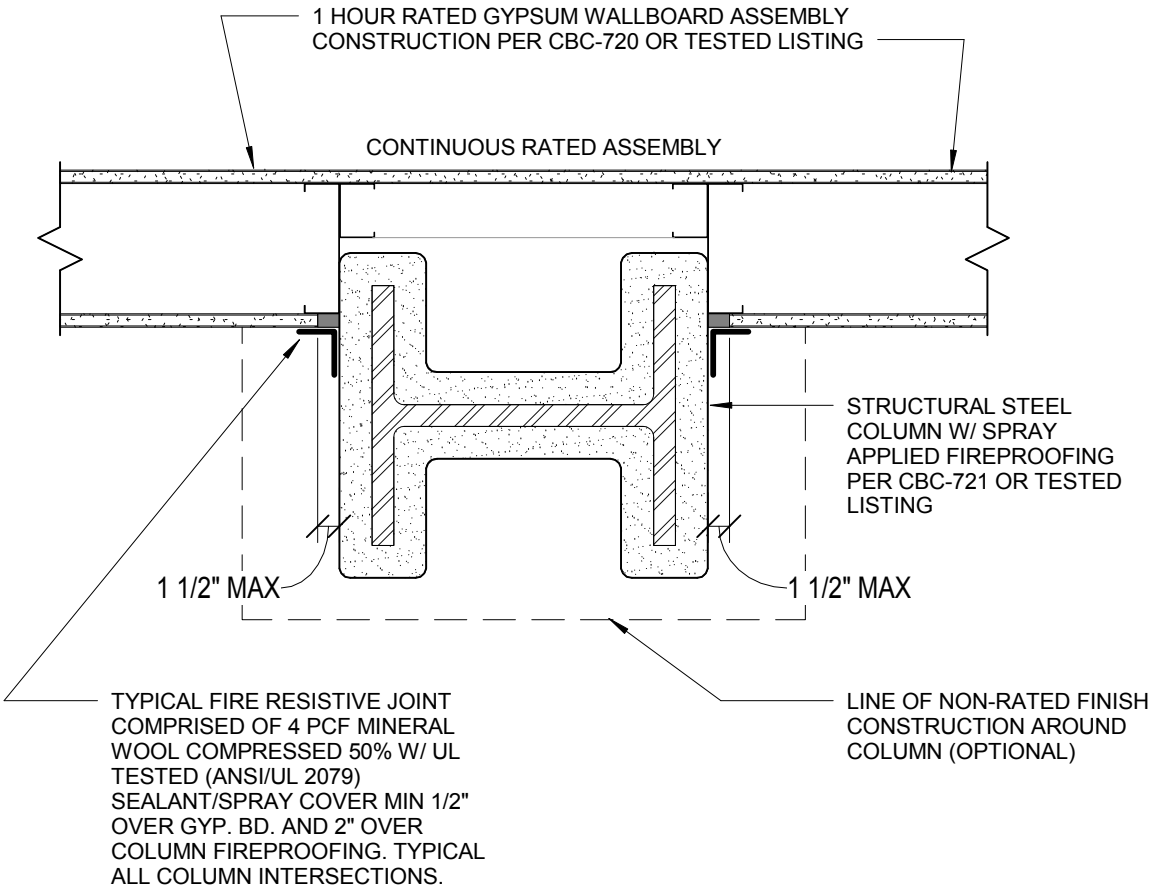

NOTES:
1. MAXIMUM SEPARATION BETWEEN SIDE OF GYPSUM WALLBOARD AND FACE OF FIREPROOFING IS 1 1/2".
2. THE FIRE RESISTIVE RATING OF STEEL COLUMN MUST BE EQUAL OR GREATER THAN WALL RATING.
3. "WET" THICKNESS OF SEALANT TO BE MIN. 1/8" TESTED IN ACCORDANCE WITH ASTM E1966 (ANSI/UL 2079).
4. SEE FR1.00, FR1.01, FR1.02 FOR JOINT DESCRIPTION

Section Title : OSHPD FIRE RESISTIVE STANDARD DETAILS		OPD No:
Sheet Title : INTERSECTION OF 1-HR-FR PARTITION, WALL AND BARRIER AT PROTECTED COLUMN		FR1.10

2/18/2014 8:14:00 AM

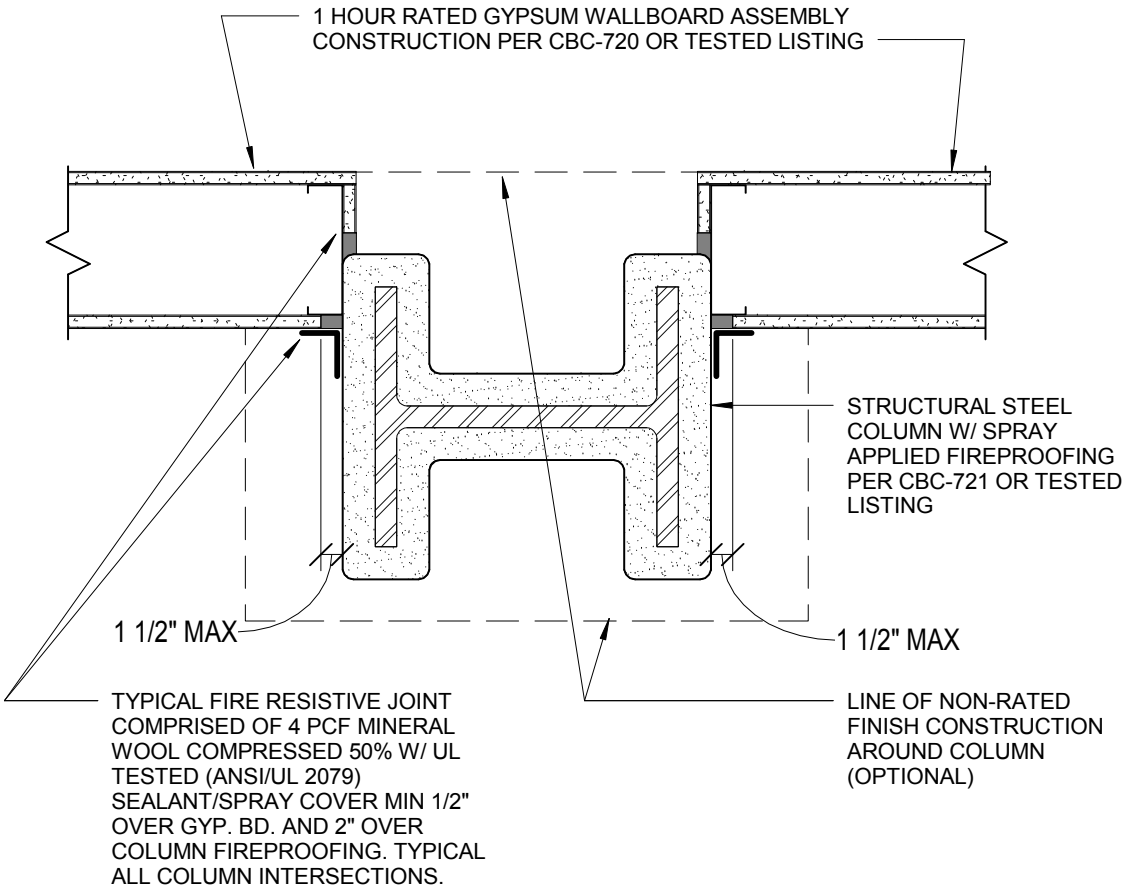

NOTES:
1. MAXIMUM SEPARATION BETWEEN SIDE OF GYPSUM WALLBOARD AND FACE OF FIREPROOFING IS 1 1/2".
2. THE FIRE RESISTIVE RATING OF STEEL COLUMN MUST BE EQUAL OR GREATER THAN WALL RATING.
3. "WET" THICKNESS OF SEALANT TO BE MIN. 1/8" TESTED IN ACCORDANCE WITH ASTM E1966 (ANSI/UL 2079).
4. SEE FR1.00, FR1.01, FR1.02 FOR JOINT DESCRIPTION

Section Title : OSHPD FIRE RESISTIVE STANDARD DETAILS		OPD No:
Sheet Title : INTERSECTION OF 1-HR-FR PARTITION, WALL AND BARRIER AT PROTECTED COLUMN		FR1.11

2/18/2014 8:14:01 AM

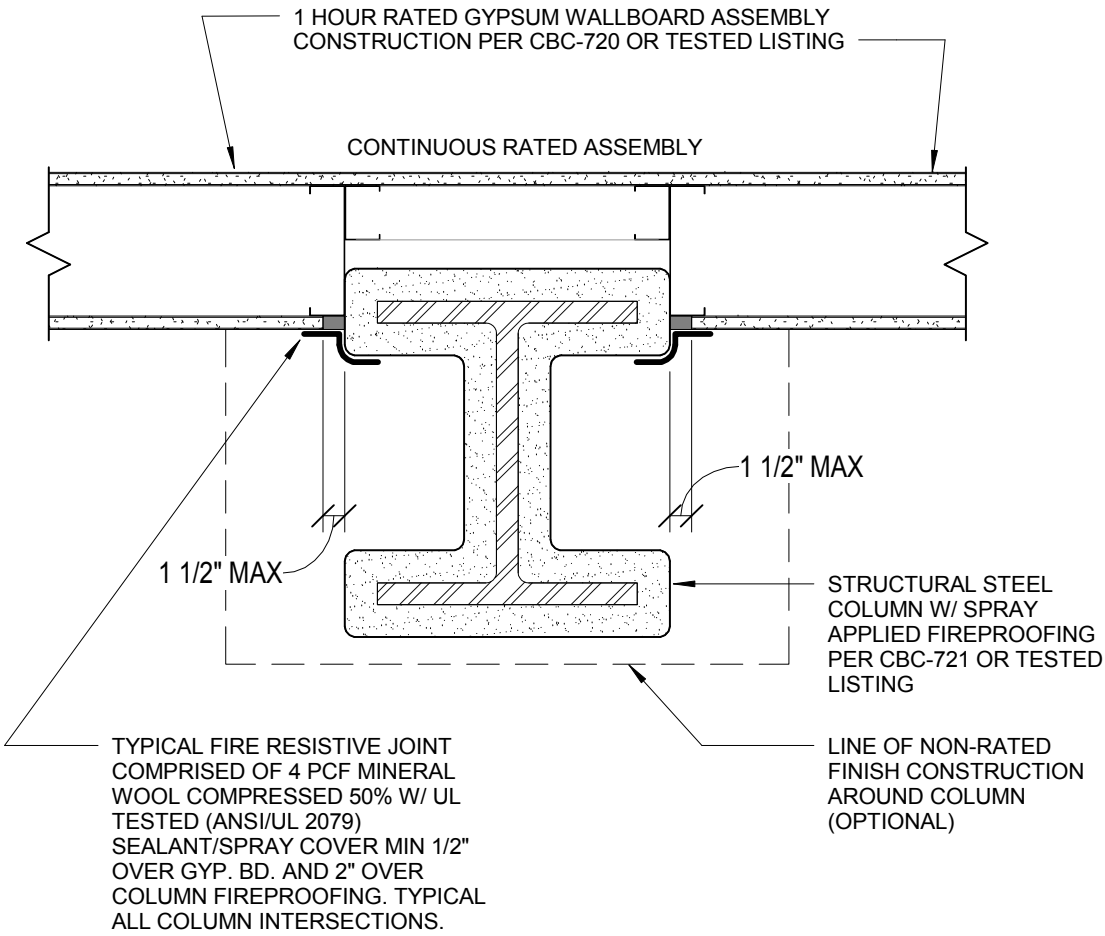

NOTES:
1. MAXIMUM SEPARATION BETWEEN SIDE OF GYPSUM WALLBOARD AND FACE OF FIREPROOFING IS 1 1/2".
2. THE FIRE RESISTIVE RATING OF STEEL COLUMN MUST BE EQUAL OR GREATER THAN WALL RATING.
3. "WET" THICKNESS OF SEALANT TO BE MIN. 1/8" TESTED IN ACCORDANCE WITH ASTM E1966 (ANSI/UL 2079).
4. SEE FR1.00, FR1.01, FR1.02 FOR JOINT DESCRIPTION

Section Title : OSHPD FIRE RESISTIVE STANDARD DETAILS		OPD No:
Sheet Title : INTERSECTION OF 1-HR-FR PARTITION, WALL AND BARRIER AT PROTECTED COLUMN		FR1.12

2/18/2014 8:14:01 AM

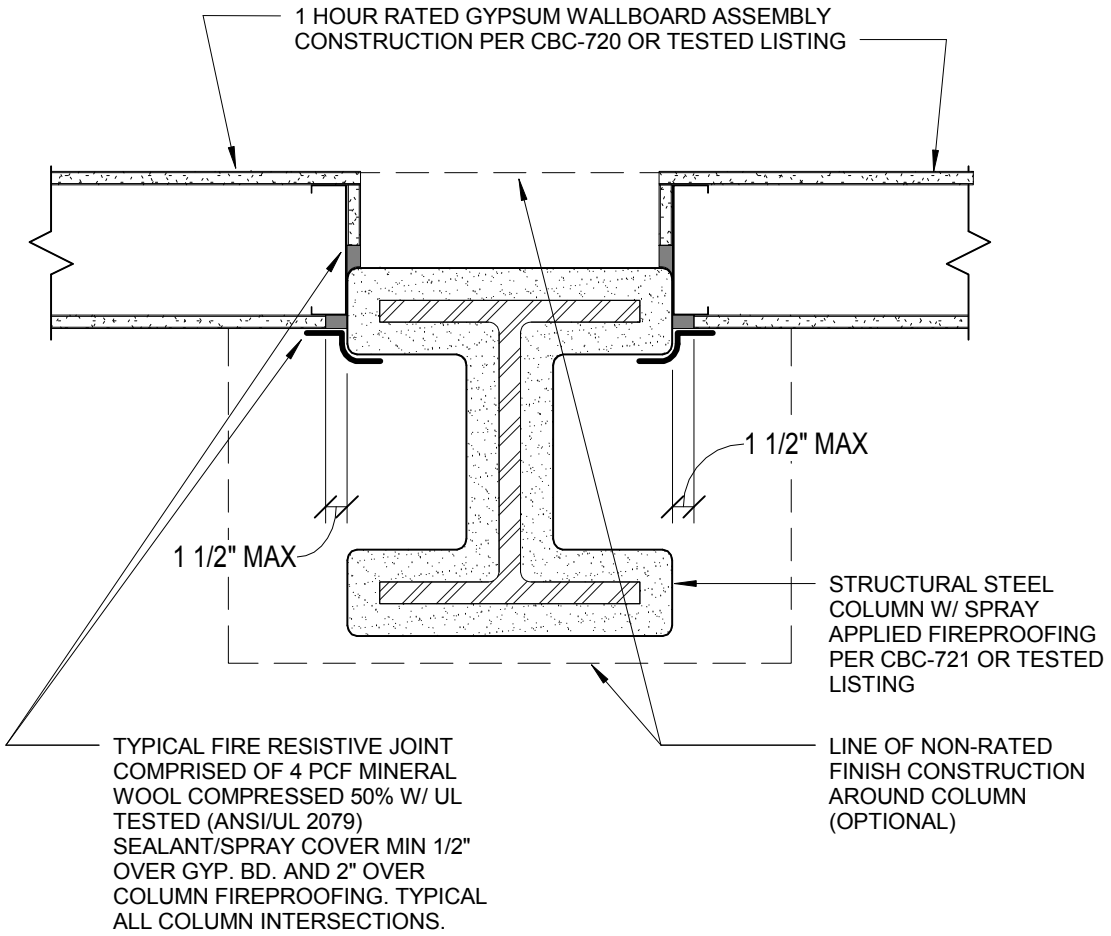

NOTES:
1. MAXIMUM SEPARATION BETWEEN SIDE OF GYPSUM WALLBOARD AND FACE OF FIREPROOFING IS 1 1/2".
2. THE FIRE RESISTIVE RATING OF STEEL COLUMN MUST BE EQUAL OR GREATER THAN WALL RATING.
3. "WET" THICKNESS OF SEALANT TO BE MIN. 1/8" TESTED IN ACCORDANCE WITH ASTM E1966 (ANSI/UL 2079).
4. SEE FR1.00, FR1.01, FR1.02 FOR JOINT DESCRIPTION

Section Title : OSHPD FIRE RESISTIVE STANDARD DETAILS		OPD No:
Sheet Title : INTERSECTION OF 1-HR-FR PARTITION, WALL AND BARRIER AT PROTECTED COLUMN		FR1.13

2/18/2014 8:14:01 AM

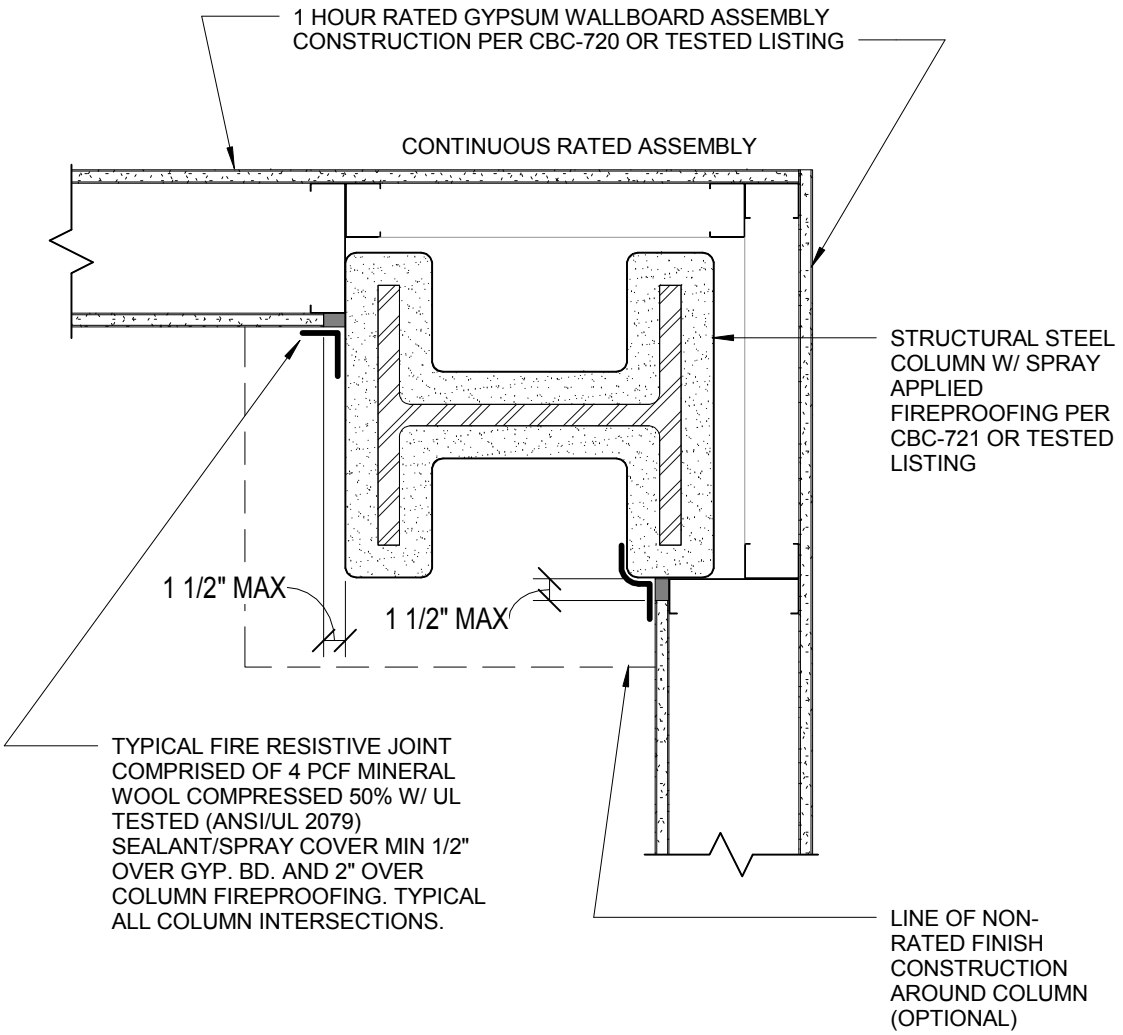

NOTES:
1. MAXIMUM SEPARATION BETWEEN SIDE OF GYPSUM WALLBOARD AND FACE OF FIREPROOFING IS 1 1/2".
2. THE FIRE RESISTIVE RATING OF STEEL COLUMN MUST BE EQUAL OR GREATER THAN WALL RATING.
3. "WET" THICKNESS OF SEALANT TO BE MIN. 1/8" TESTED IN ACCORDANCE WITH ASTM E1966 (ANSI/UL 2079).
4. SEE FR1.00, FR1.01, FR1.02 FOR JOINT DESCRIPTION

Section Title : OSHPD FIRE RESISTIVE STANDARD DETAILS	OPD No:
Sheet Title : INTERSECTION OF 1-HR-FR PARTITION, WALL AND BARRIER AT PROTECTED COLUMN	FR1.14

2/18/2014 8:14:02 AM

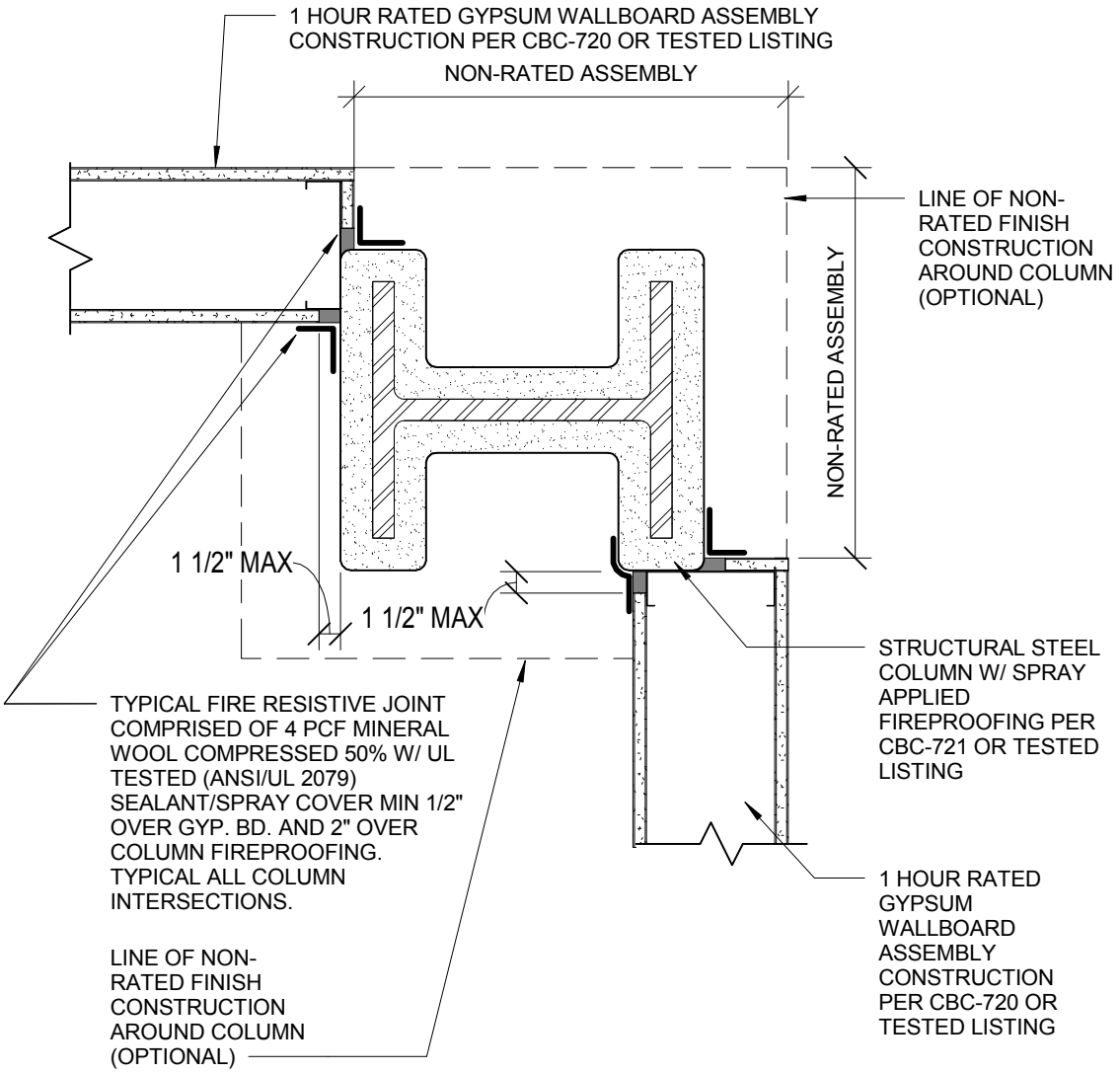

NOTES:
1. MAXIMUM SEPARATION BETWEEN SIDE OF GYPSUM WALLBOARD AND FACE OF FIREPROOFING IS 1 1/2".
2. THE FIRE RESISTIVE RATING OF STEEL COLUMN MUST BE EQUAL OR GREATER THAN WALL RATING.
3. "WET" THICKNESS OF SEALANT TO BE MIN. 1/8" TESTED IN ACCORDANCE WITH ASTM E1966 (ANSI/UL 2079).
4. SEE FR1.00, FR1.01, FR1.02 FOR JOINT DESCRIPTION

Section Title : OSHPD FIRE RESISTIVE STANDARD DETAILS	OPD No:
Sheet Title : INTERSECTION OF 1-HR-FR PARTITION, WALL AND BARRIER AT PROTECTED COLUMN	FR1.15

2/18/2014 8:14:02 AM

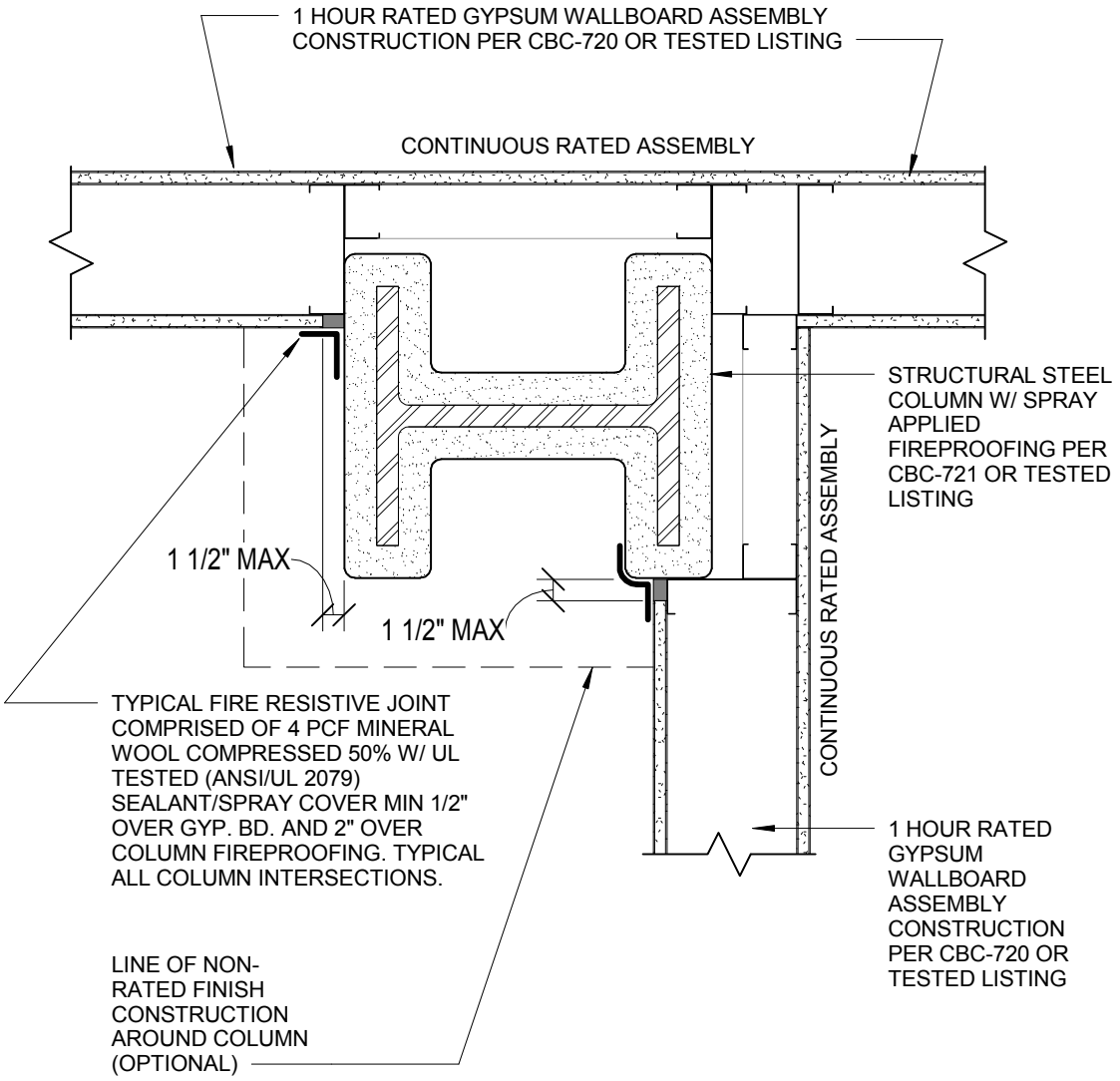

NOTES:
1. MAXIMUM SEPARATION BETWEEN SIDE OF GYPSUM WALLBOARD AND FACE OF FIREPROOFING IS 1 1/2".
2. THE FIRE RESISTIVE RATING OF STEEL COLUMN MUST BE EQUAL OR GREATER THAN WALL RATING.
3. "WET" THICKNESS OF SEALANT TO BE MIN. 1/8" TESTED IN ACCORDANCE WITH ASTM E1966 (ANSI/UL 2079).
4. SEE FR1.00, FR1.01, FR1.02 FOR JOINT DESCRIPTION

Section Title : OSHPD FIRE RESISTIVE STANDARD DETAILS	OPD No:
Sheet Title : INTERSECTION OF 1-HR-FR PARTITION, WALL AND BARRIER AT PROTECTED COLUMN	FR1.16

2/18/2014 8:14:03 AM

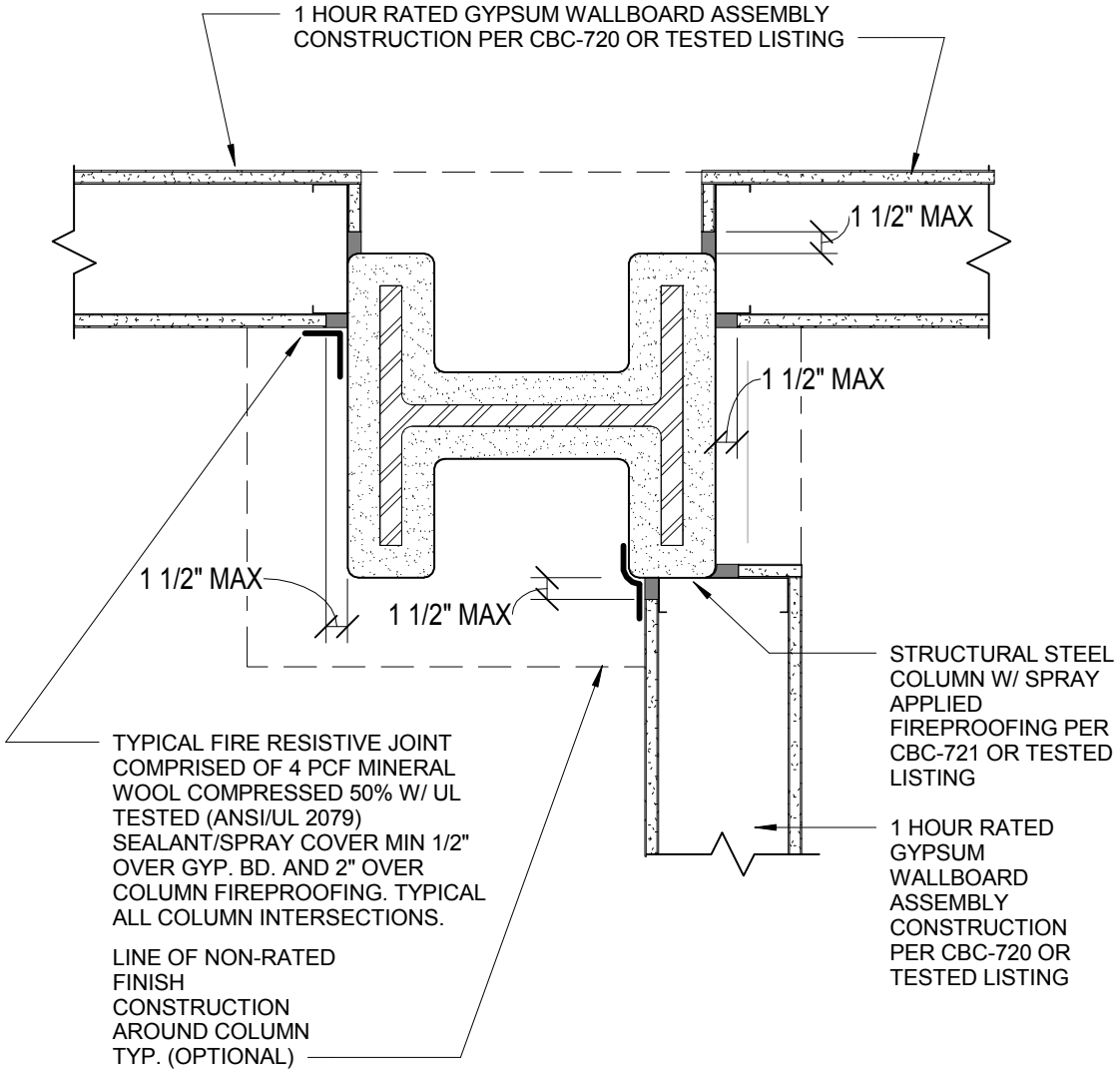

NOTES:
1. MAXIMUM SEPARATION BETWEEN SIDE OF GYPSUM WALLBOARD AND FACE OF FIREPROOFING IS 1 1/2".
2. THE FIRE RESISTIVE RATING OF STEEL COLUMN MUST BE EQUAL OR GREATER THAN WALL RATING.
3. "WET" THICKNESS OF SEALANT TO BE MIN. 1/8" TESTED IN ACCORDANCE WITH ASTM E1966 (ANSI/UL 2079).
4. SEE FR1.00, FR1.01, FR1.02 FOR JOINT DESCRIPTION

Section Title : OSHPD FIRE RESISTIVE STANDARD DETAILS	OPD No:
Sheet Title : INTERSECTION OF 1-HR-FR PARTITION, WALL AND BARRIER AT PROTECTED COLUMN	FR1.17

2/18/2014 8:14:03 AM

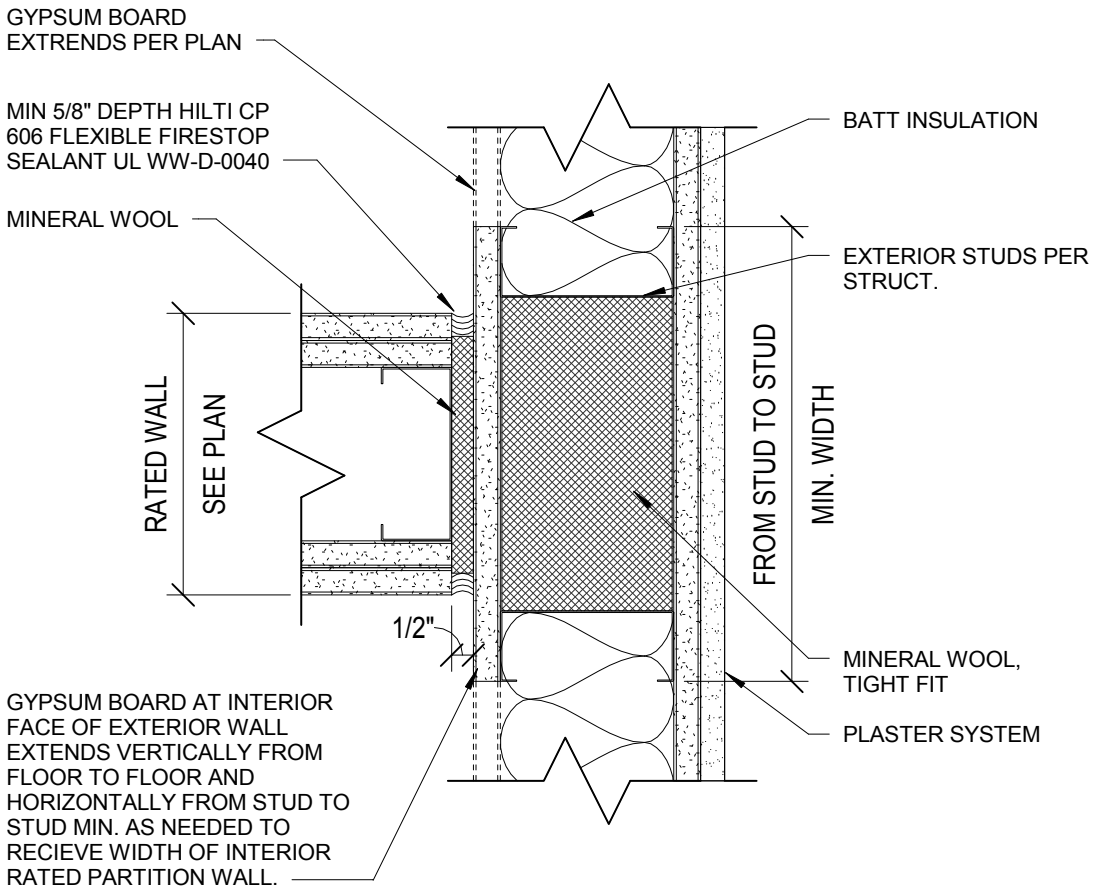

Section Title : OSHPD FIRE RESISTIVE STANDARD DETAILS	OPD No:
Sheet Title : RATED INTERIOR WALL TERMINATION AT EXTERIOR PLASTER WALL	FR1.33

2/18/2014 8:14:03 AM

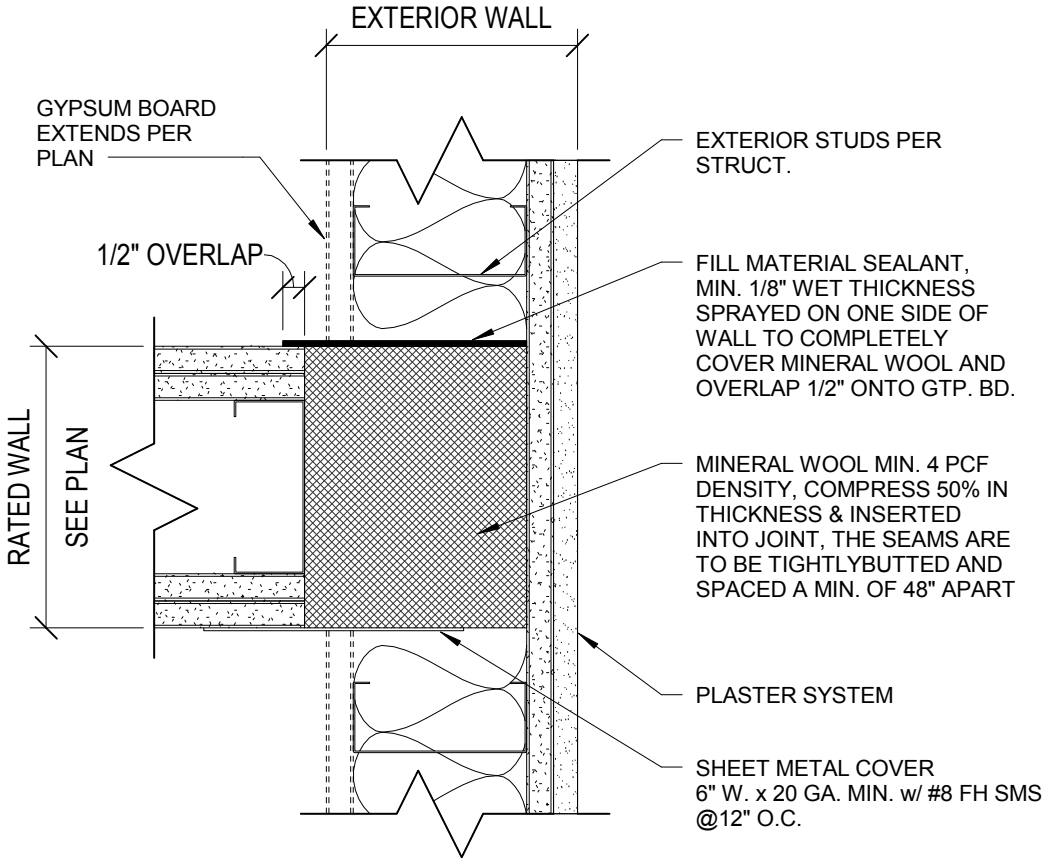

Section Title : OSHPD FIRE RESISTIVE STANDARD DETAILS		OPD No:
Sheet Title : RATED INTERIOR WALL TERMINATION AT EXTERIOR PLASTER WALL		FR1.34

2/18/2014 8:14:03 AM

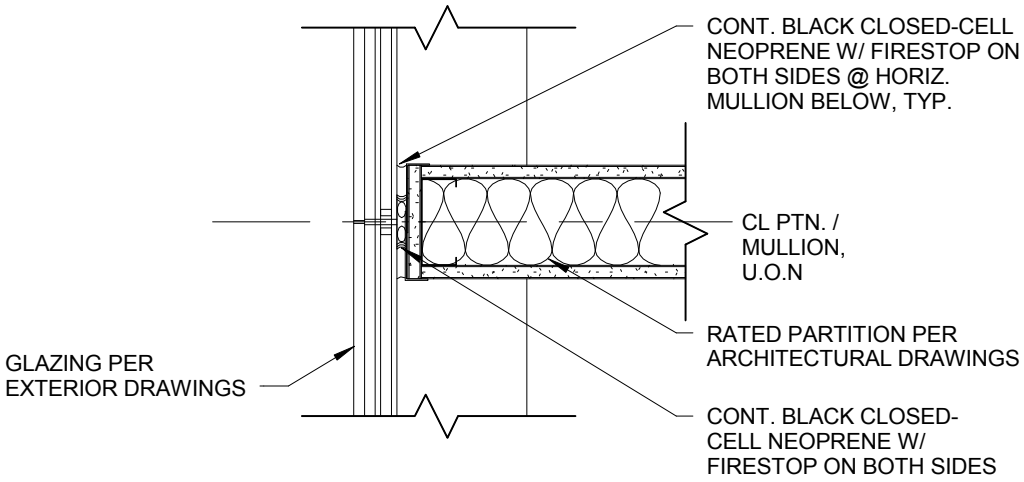

TYP. 1 HR. RATED PTN.

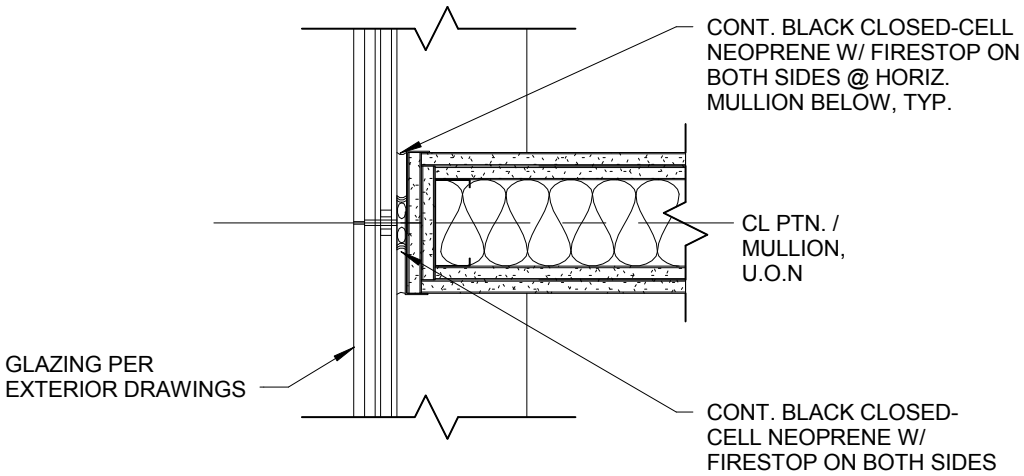

TYP. 2 HR. RATED PTN.

Section Title : OSHPD FIRE RESISTIVE STANDARD DETAILS		OPD No:
Sheet Title : PARTITION TERMINATION @ GLAZING		FR1.35

2/18/2014 8:14:03 AM

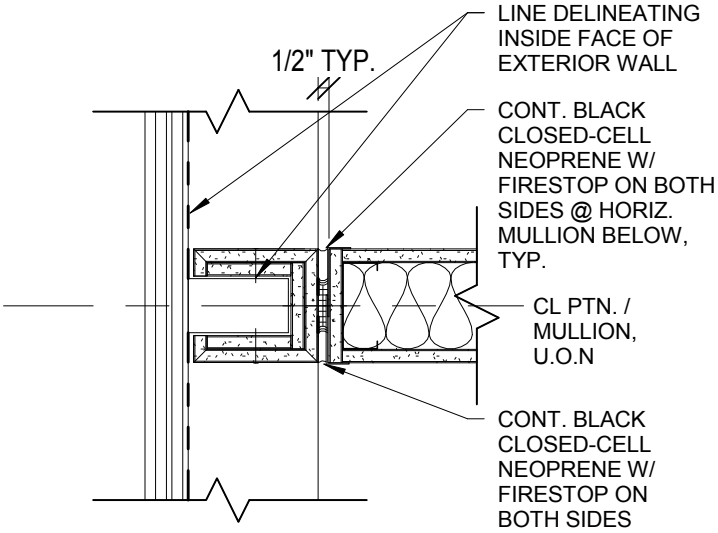

TYP. DRYWALL WRAPPED MULLION PTN.

Section Title : OSHPD FIRE RESISTIVE STANDARD DETAILS		OPD No:
Sheet Title : PARTITION TERMINATION @ GLAZING		FR1.36

2/18/2014 8:14:04 AM

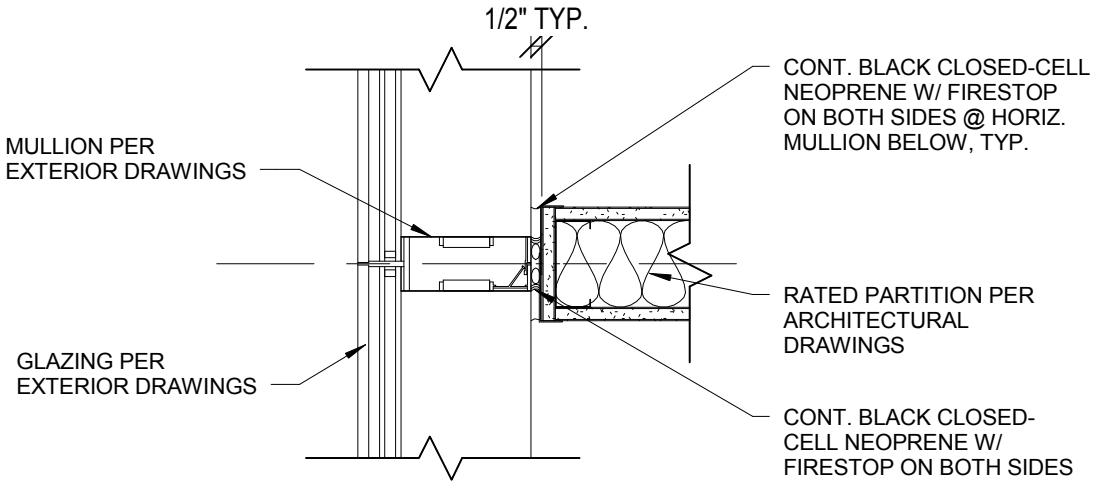

TYP. 1 HR. RATED PTN.

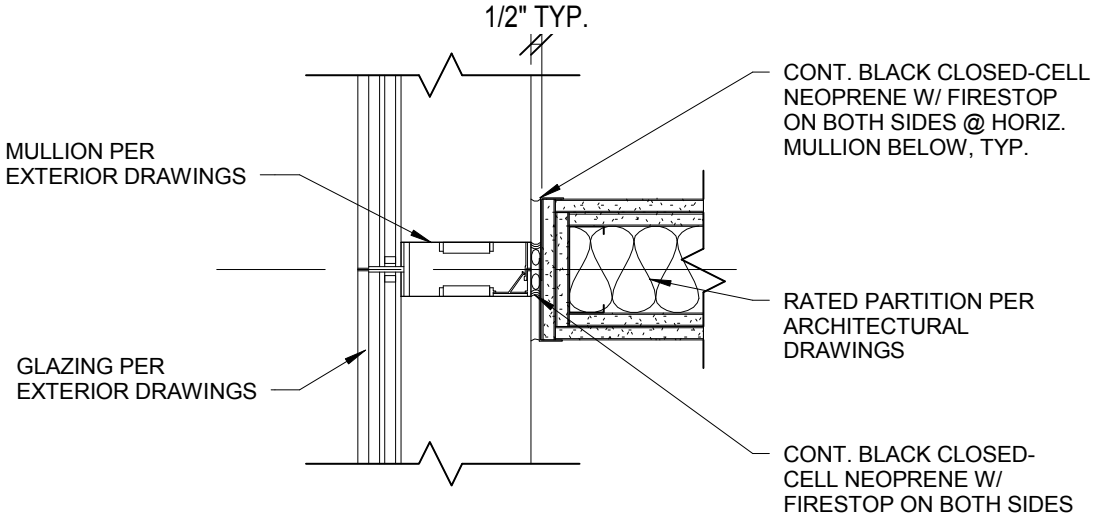

TYP. 2 HR. RATED PTN.

Section Title : OSHPD FIRE RESISTIVE STANDARD DETAILS	OPD No:
Sheet Title : PARTITION TERMINATION @ STRUCTURAL MULLION	FR1.37

2/18/2014 8:14:04 AM

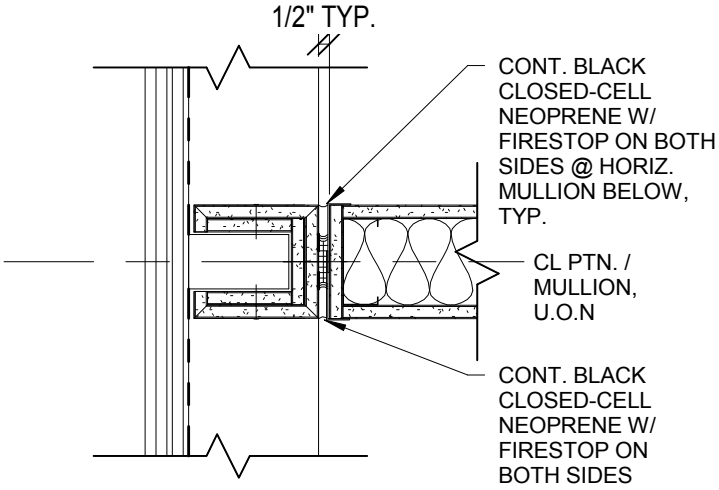

TYP. DRYWALL WRAPPED MULLION PTN.

Section Title : OSHPD FIRE RESISTIVE STANDARD DETAILS	OPD No:
Sheet Title : PARTITION TERMINATION @ STRUCTURAL MULLION - WRAPPED	FR1.38

2/18/2014 8:14:04 AM

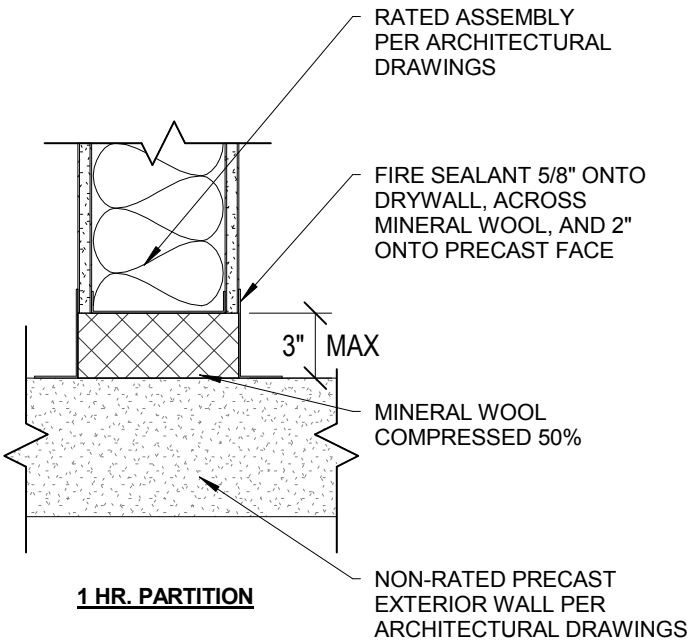

1 HR. PARTITION

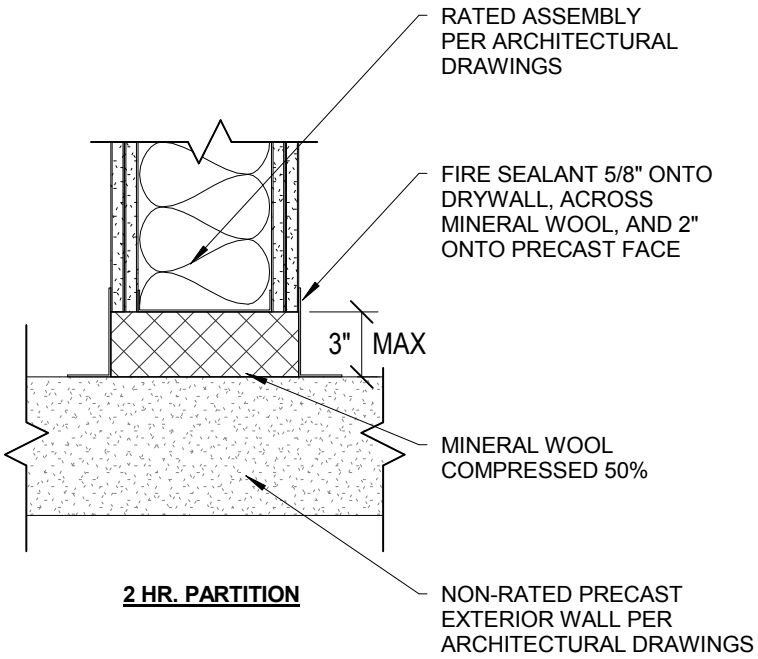

2 HR. PARTITION

Section Title : OSHPD FIRE RESISTIVE STANDARD DETAILS		OPD No:
Sheet Title : PARTITION TERMINATION TO PRECAST		FR1.39

2/18/2014 8:14:04 AM

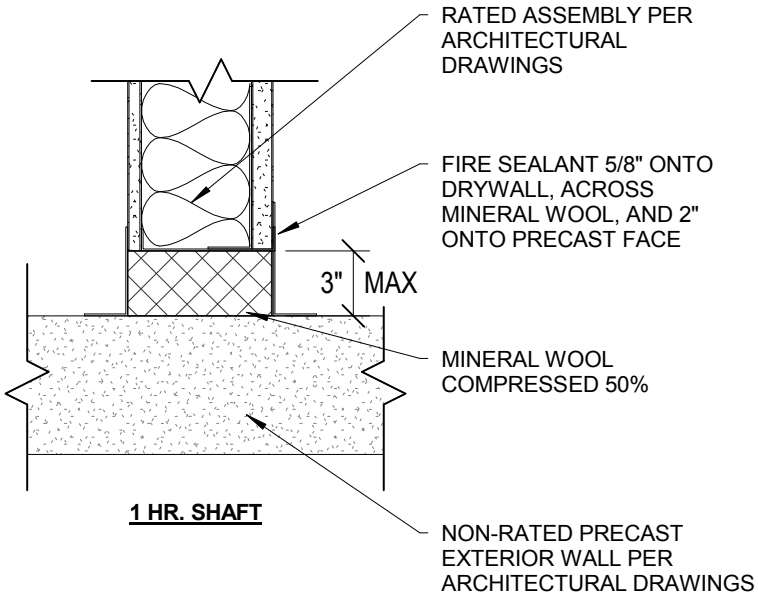

1 HR. SHAFT

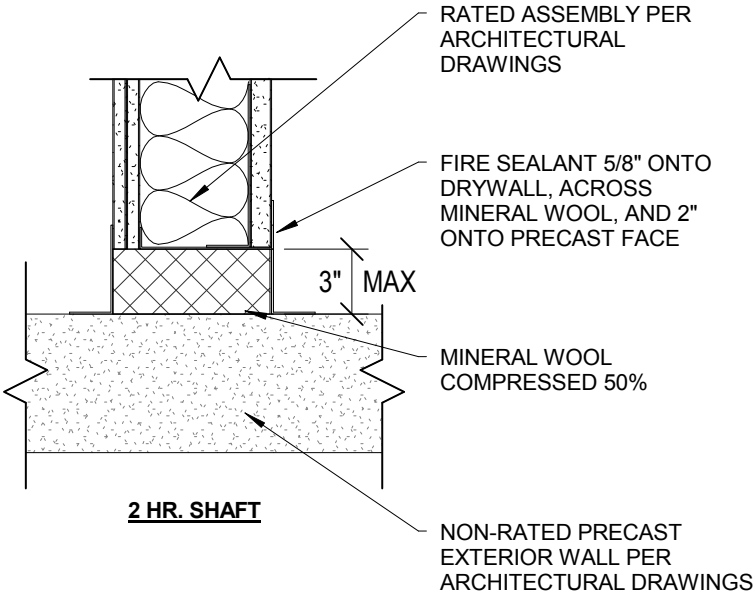

2 HR. SHAFT

Section Title : OSHPD FIRE RESISTIVE STANDARD DETAILS	OPD No:
Sheet Title : SHAFTWALL TERMINATION TO PRECAST	FR1.40

2/18/2014 8:14:04 AM

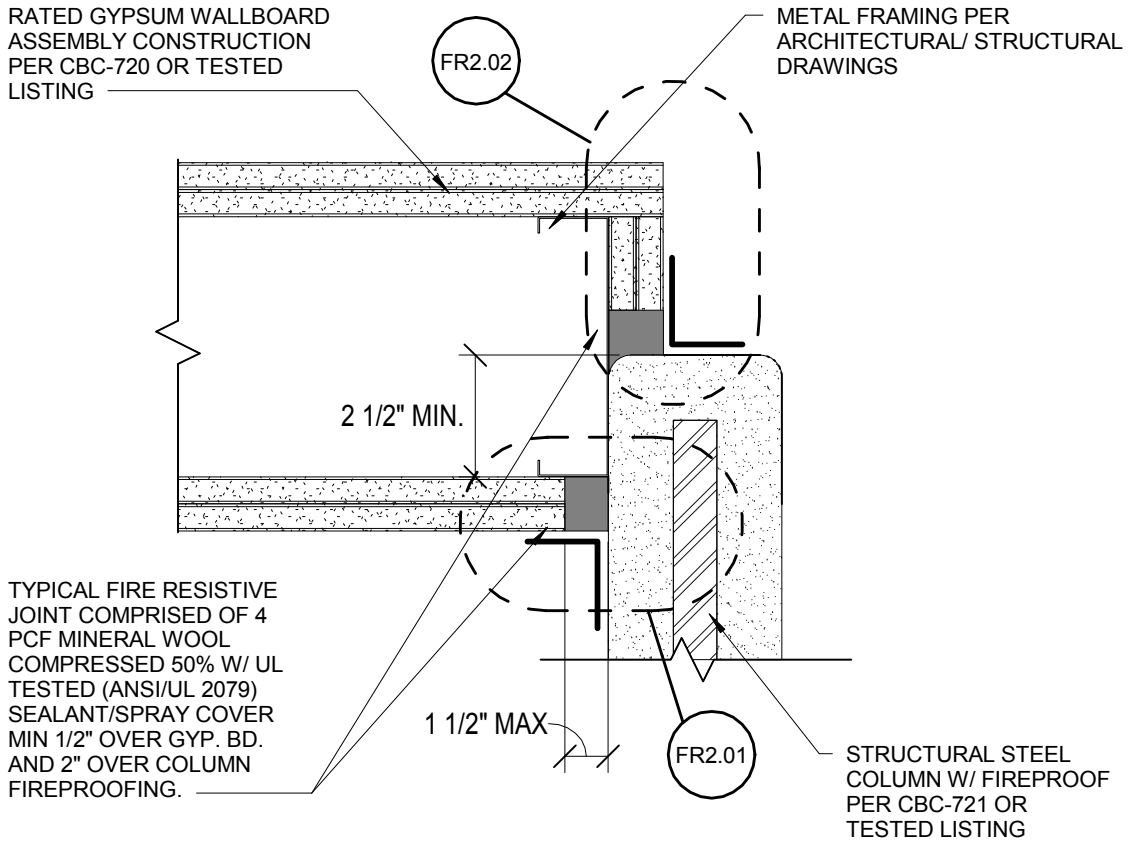

Section Title : OSHPD FIRE RESISTIVE STANDARD DETAILS			OPD No:
Sheet Title : BASIC JOINT DETAIL FOR 2-HR-FR RATED WALL ASSEMBLIES - COMPOSITE @ JOINTS			FR2.00

2/18/2014 8:14:05 AM

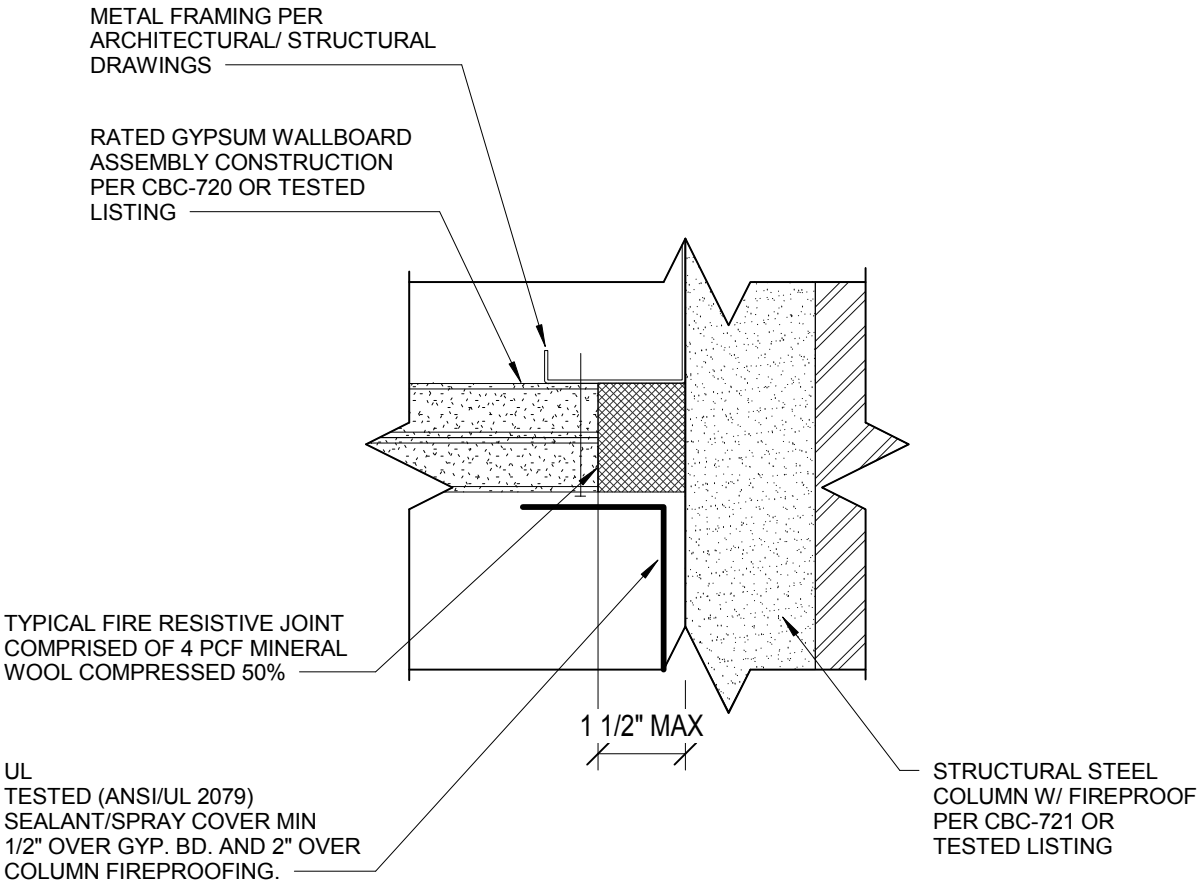

Section Title : OSHPD FIRE RESISTIVE STANDARD DETAILS	OPD No:
Sheet Title : BASIC JOINT DETAIL FOR 2-HR-FR RATED WALL ASSEMBLIES - FACE JOINT	FR2.01

2/18/2014 8:14:05 AM

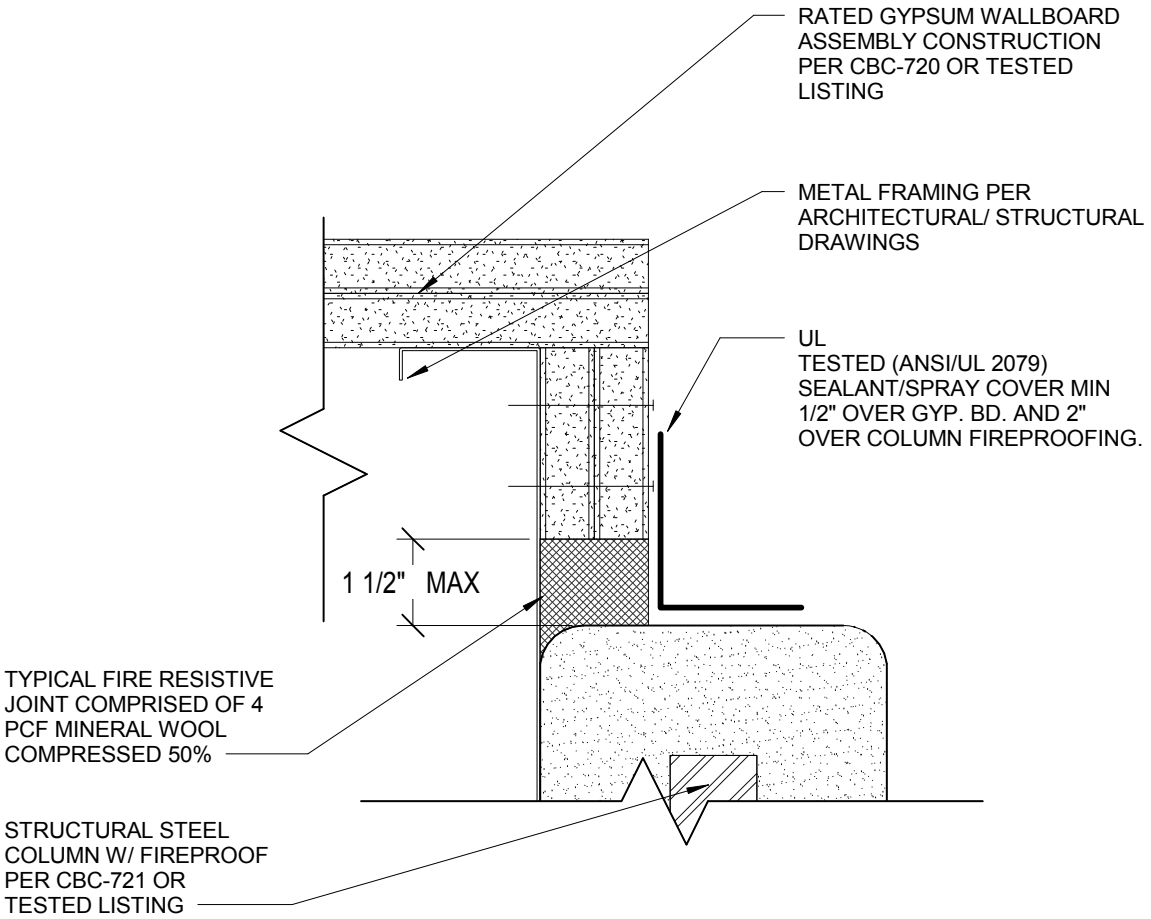

Section Title : OSHPD FIRE RESISTIVE STANDARD DETAILS	OPD No:
Sheet Title : BASIC JOINT DETAIL FOR 2-HR-FR RATED WALL ASSEMBLIES - END JOINT	FR2.02

2/18/2014 8:14:05 AM

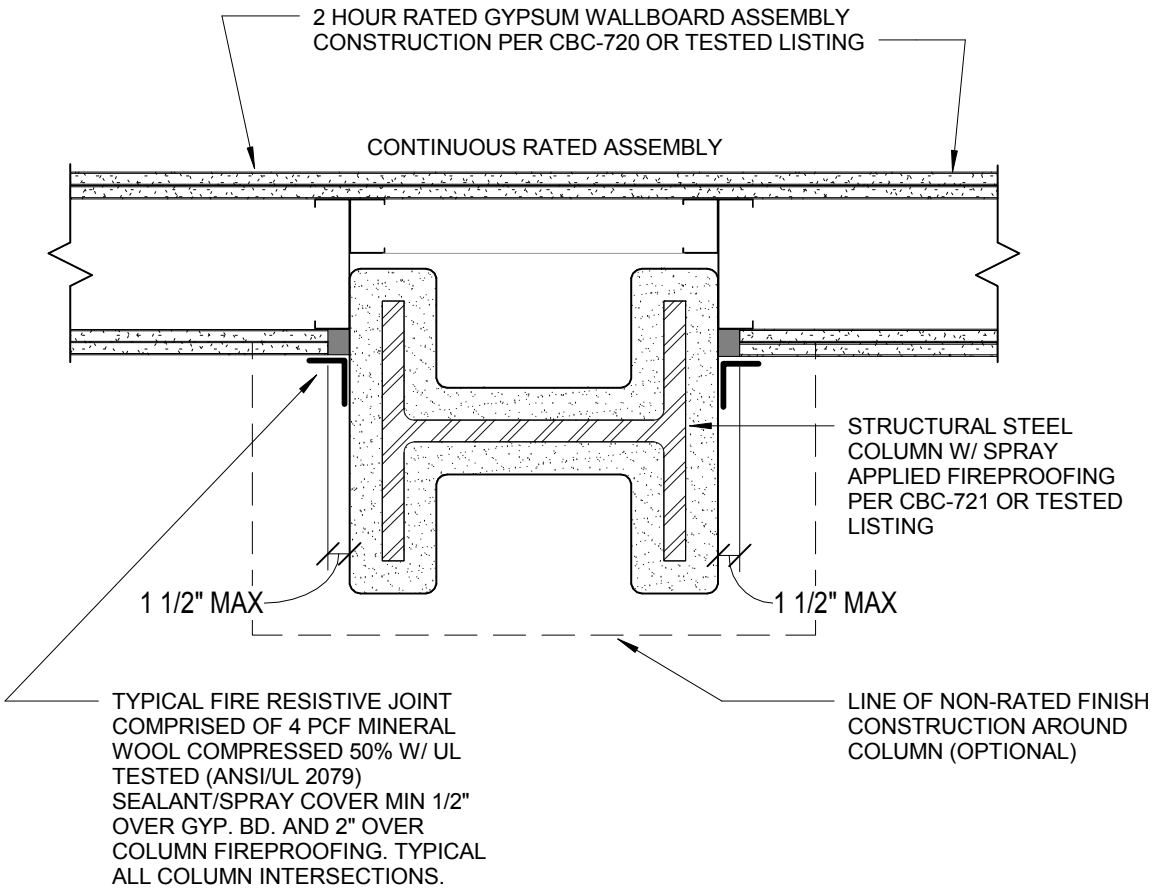

NOTES:
1. MAXIMUM SEPARATION BETWEEN SIDE OF GYPSUM WALLBOARD AND FACE OF FIREPROOFING IS 1 1/2".
2. THE FIRE RESISTIVE RATING OF STEEL COLUMN MUST BE EQUAL OR GREATER THAN WALL RATING.
3. "WET" THICKNESS OF SEALANT TO BE MIN. 1/8" TESTED IN ACCORDANCE WITH ASTM E1966 (ANSI/UL 2079).
4. SEE FR2.00, FR2.01, FR2.02 FOR JOINT DESCRIPTION

Section Title : OSHPD FIRE RESISTIVE STANDARD DETAILS	OPD No:
Sheet Title : INTERSECTION OF 2-HR-FR PARTITION, WALL AND BARRIER AT PROTECTED COLUMN	FR2.10

2/18/2014 8:14:06 AM

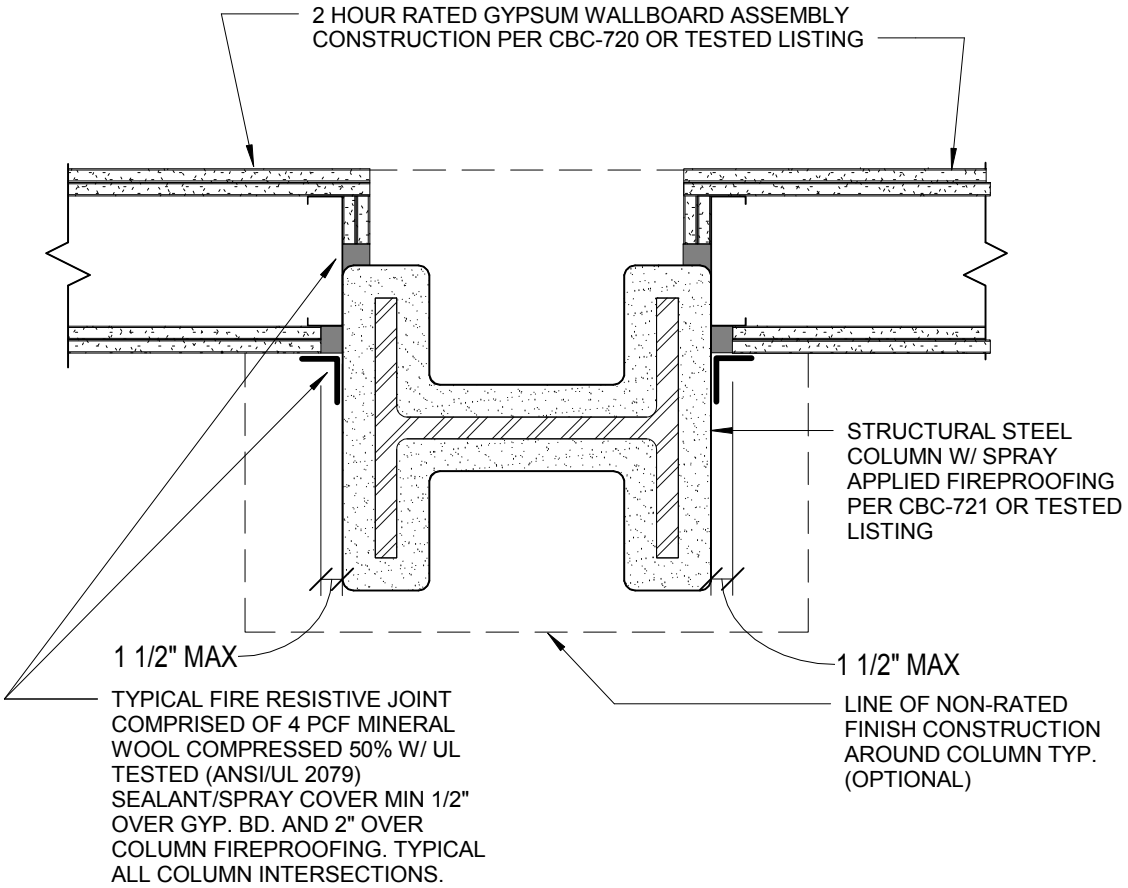

NOTES:
1. MAXIMUM SEPARATION BETWEEN SIDE OF GYPSUM WALLBOARD AND FACE OF FIREPROOFING IS 1 1/2".
2. THE FIRE RESISTIVE RATING OF STEEL COLUMN MUST BE EQUAL OR GREATER THAN WALL RATING.
3. "WET" THICKNESS OF SEALANT TO BE MIN. 1/8" TESTED IN ACCORDANCE WITH ASTM E1966 (ANSI/UL 2079).
4. SEE FR2.00, FR2.01, FR2.02 FOR JOINT DESCRIPTION

Section Title : OSHPD FIRE RESISTIVE STANDARD DETAILS	OPD No:
Sheet Title : INTERSECTION OF 2-HR-FR PARTITION, WALL AND BARRIER AT PROTECTED COLUMN	FR2.11

2/18/2014 8:14:06 AM

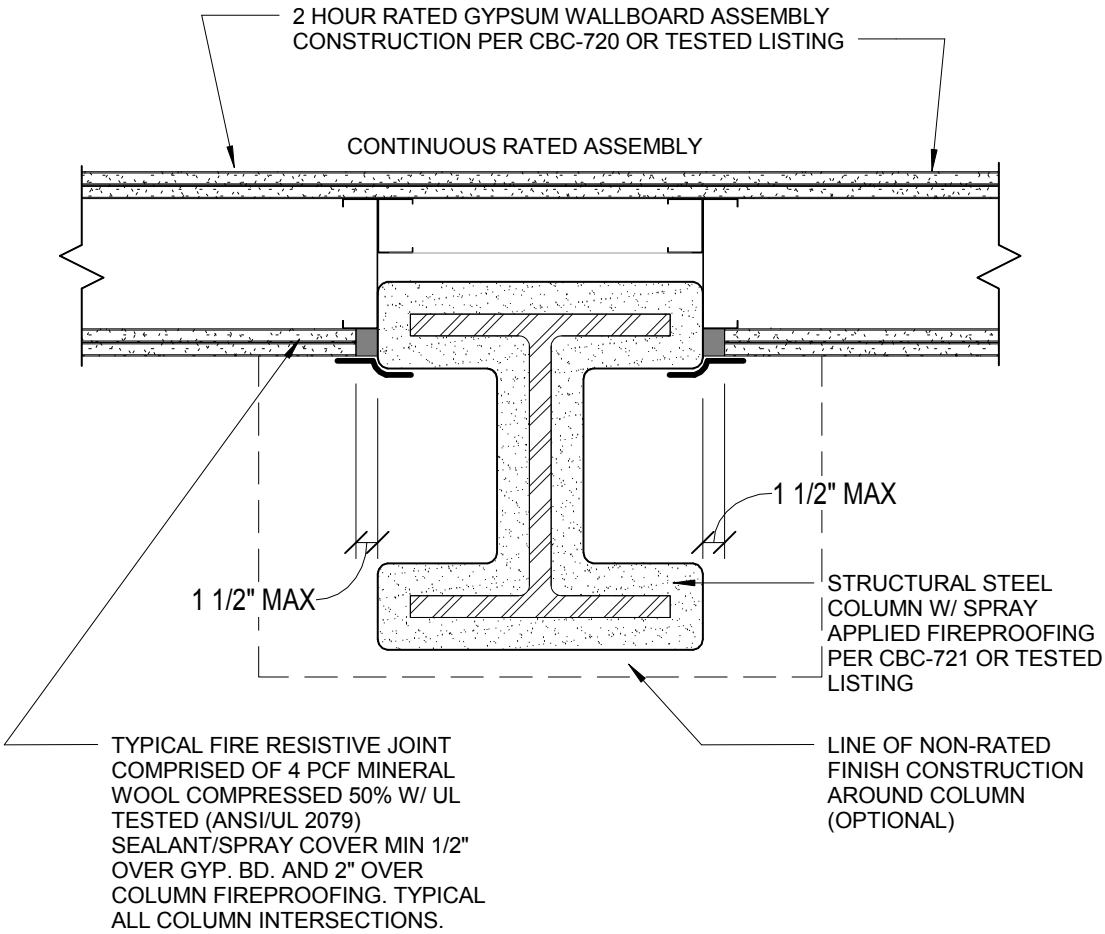

NOTES:
1. MAXIMUM SEPARATION BETWEEN SIDE OF GYPSUM WALLBOARD AND FACE OF FIREPROOFING IS 1 1/2".
2. THE FIRE RESISTIVE RATING OF STEEL COLUMN MUST BE EQUAL OR GREATER THAN WALL RATING.
3. "WET" THICKNESS OF SEALANT TO BE MIN. 1/8" TESTED IN ACCORDANCE WITH ASTM E1966 (ANSI/UL 2079).
4. SEE FR2.00, FR2.01, FR2.02 FOR JOINT DESCRIPTION

Section Title : OSHPD FIRE RESISTIVE STANDARD DETAILS	OPD No:
Sheet Title : INTERSECTION OF 2-HR-FR PARTITION, WALL AND BARRIER AT PROTECTED COLUMN	FR2.12

2/18/2014 8:14:06 AM

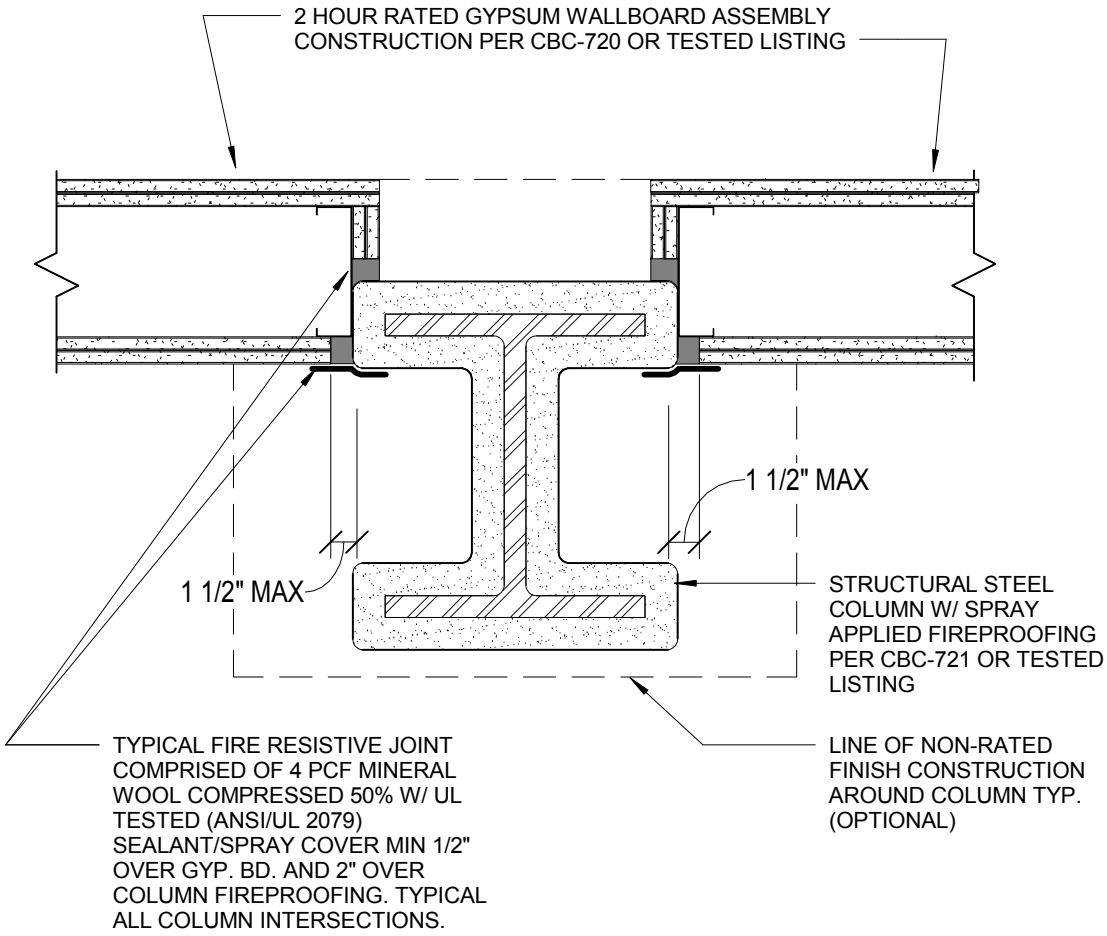

NOTES:
1. MAXIMUM SEPARATION BETWEEN SIDE OF GYPSUM WALLBOARD AND FACE OF FIREPROOFING IS 1 1/2".
2. THE FIRE RESISTIVE RATING OF STEEL COLUMN MUST BE EQUAL OR GREATER THAN WALL RATING.
3. "WET" THICKNESS OF SEALANT TO BE MIN. 1/8" TESTED IN ACCORDANCE WITH ASTM E1966 (ANSI/UL 2079).
4. SEE FR2.00, FR2.01, FR2.02 FOR JOINT DESCRIPTION

Section Title : OSHPD FIRE RESISTIVE STANDARD DETAILS		OPD No:
Sheet Title : INTERSECTION OF 2-HR-FR PARTITION, WALL AND BARRIER AT PROTECTED COLUMN		FR2.13

2/18/2014 8:14:07 AM

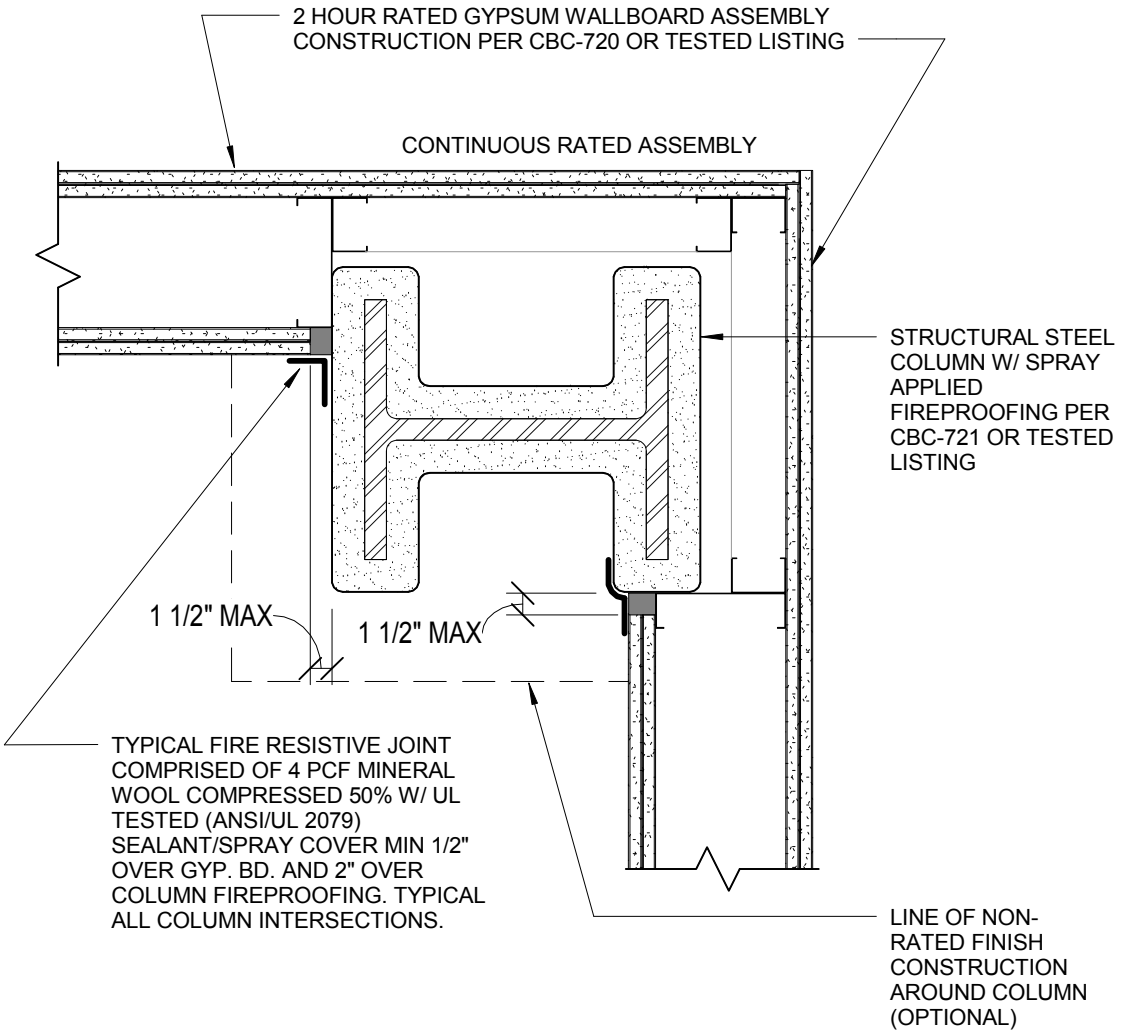

NOTES:
1. MAXIMUM SEPARATION BETWEEN SIDE OF GYPSUM WALLBOARD AND FACE OF FIREPROOFING IS 1 1/2".
2. THE FIRE RESISTIVE RATING OF STEEL COLUMN MUST BE EQUAL OR GREATER THAN WALL RATING.
3. "WET" THICKNESS OF SEALANT TO BE MIN. 1/8" TESTED IN ACCORDANCE WITH ASTM E1966 (ANSI/UL 2079).
4. SEE FR2.00, FR2.01, FR2.02 FOR JOINT DESCRIPTION

Section Title : OSHPD FIRE RESISTIVE STANDARD DETAILS	OPD No:
Sheet Title : INTERSECTION OF 2-HR-FR PARTITION, WALL AND BARRIER AT PROTECTED COLUMN	FR2.14

2/18/2014 8:14:07 AM

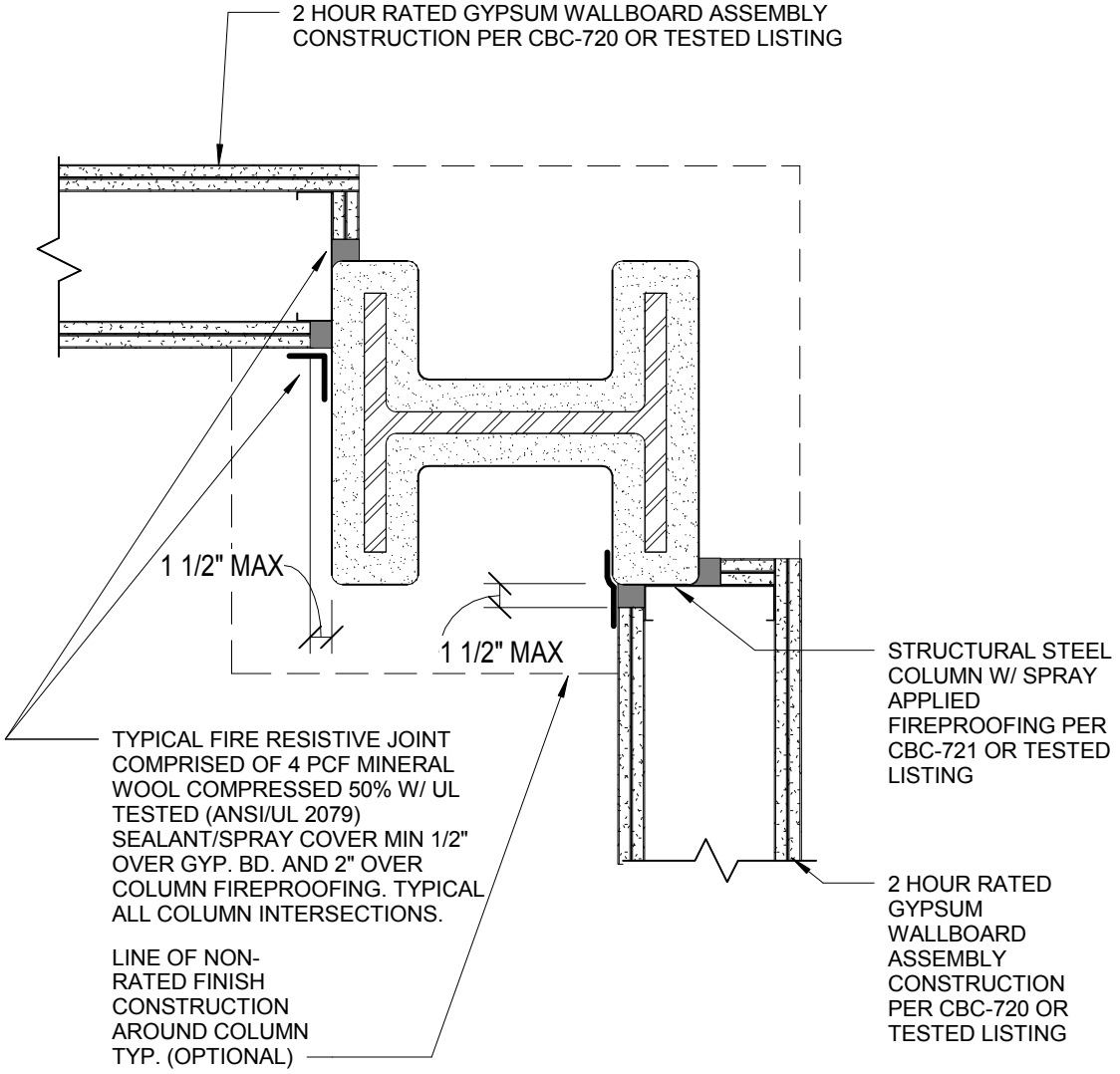

NOTES:
1. MAXIMUM SEPARATION BETWEEN SIDE OF GYPSUM WALLBOARD AND FACE OF FIREPROOFING IS 1 1/2".
2. THE FIRE RESISTIVE RATING OF STEEL COLUMN MUST BE EQUAL OR GREATER THAN WALL RATING.
3. "WET" THICKNESS OF SEALANT TO BE MIN. 1/8" TESTED IN ACCORDANCE WITH ASTM E1966 (ANSI/UL 2079).
4. SEE FR2.00, FR2.01, FR2.02 FOR JOINT DESCRIPTION

Section Title : OSHPD FIRE RESISTIVE STANDARD DETAILS	OPD No:
Sheet Title : INTERSECTION OF 2-HR-FR PARTITION, WALL AND BARRIER AT PROTECTED COLUMN	FR2.15

2/18/2014 8:14:08 AM

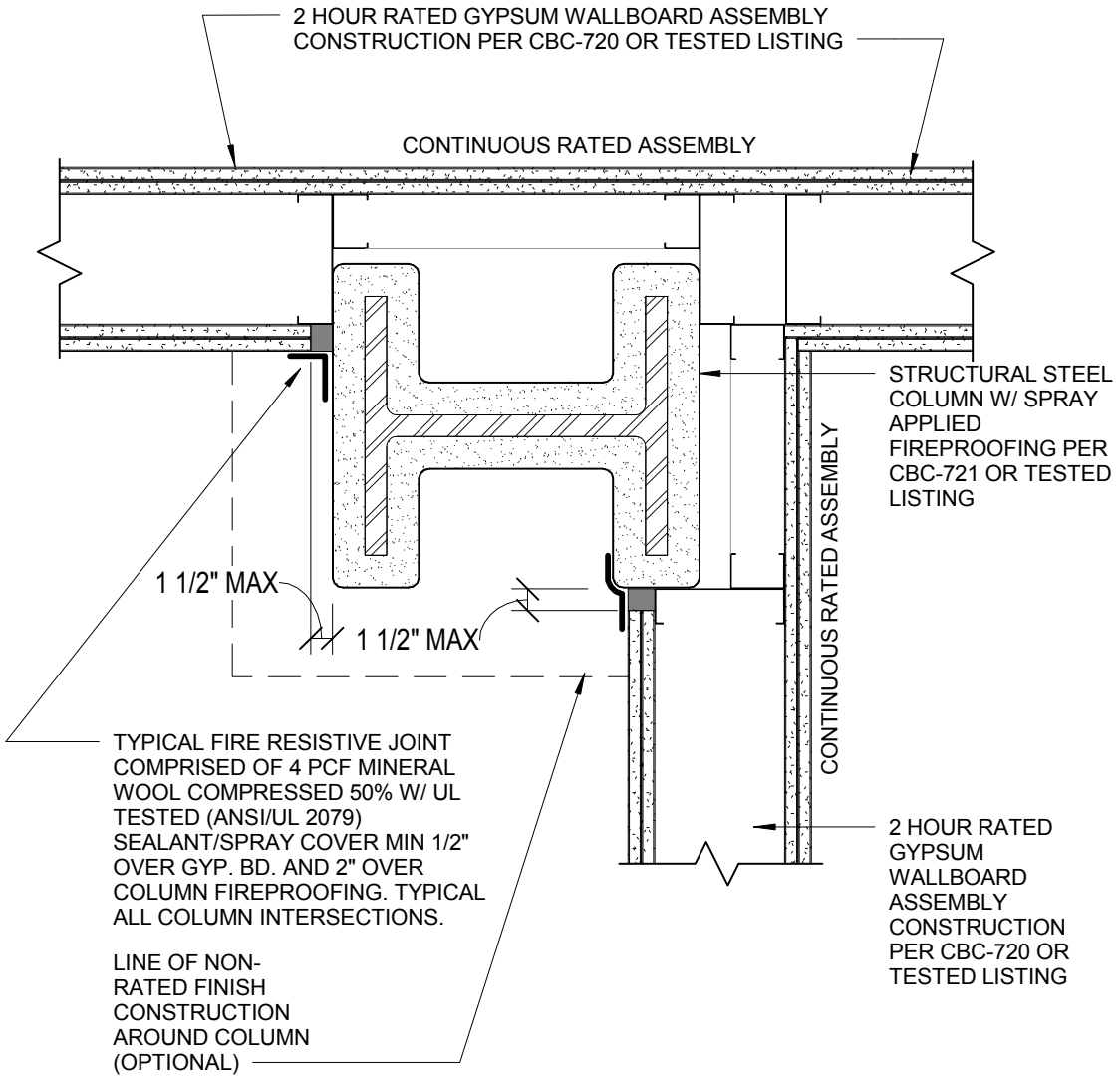

NOTES:
1. MAXIMUM SEPARATION BETWEEN SIDE OF GYPSUM WALLBOARD AND FACE OF FIREPROOFING IS 1 1/2".
2. THE FIRE RESISTIVE RATING OF STEEL COLUMN MUST BE EQUAL OR GREATER THAN WALL RATING.
3. "WET" THICKNESS OF SEALANT TO BE MIN. 1/8" TESTED IN ACCORDANCE WITH ASTM E1966 (ANSI/UL 2079).
4. SEE FR2.00, FR2.01, FR2.02 FOR JOINT DESCRIPTION

Section Title : OSHPD FIRE RESISTIVE STANDARD DETAILS	OPD No:
Sheet Title : INTERSECTION OF 2-HR-FR PARTITION, WALL AND BARRIER AT PROTECTED COLUMN	FR2.16

2/18/2014 8:14:08 AM

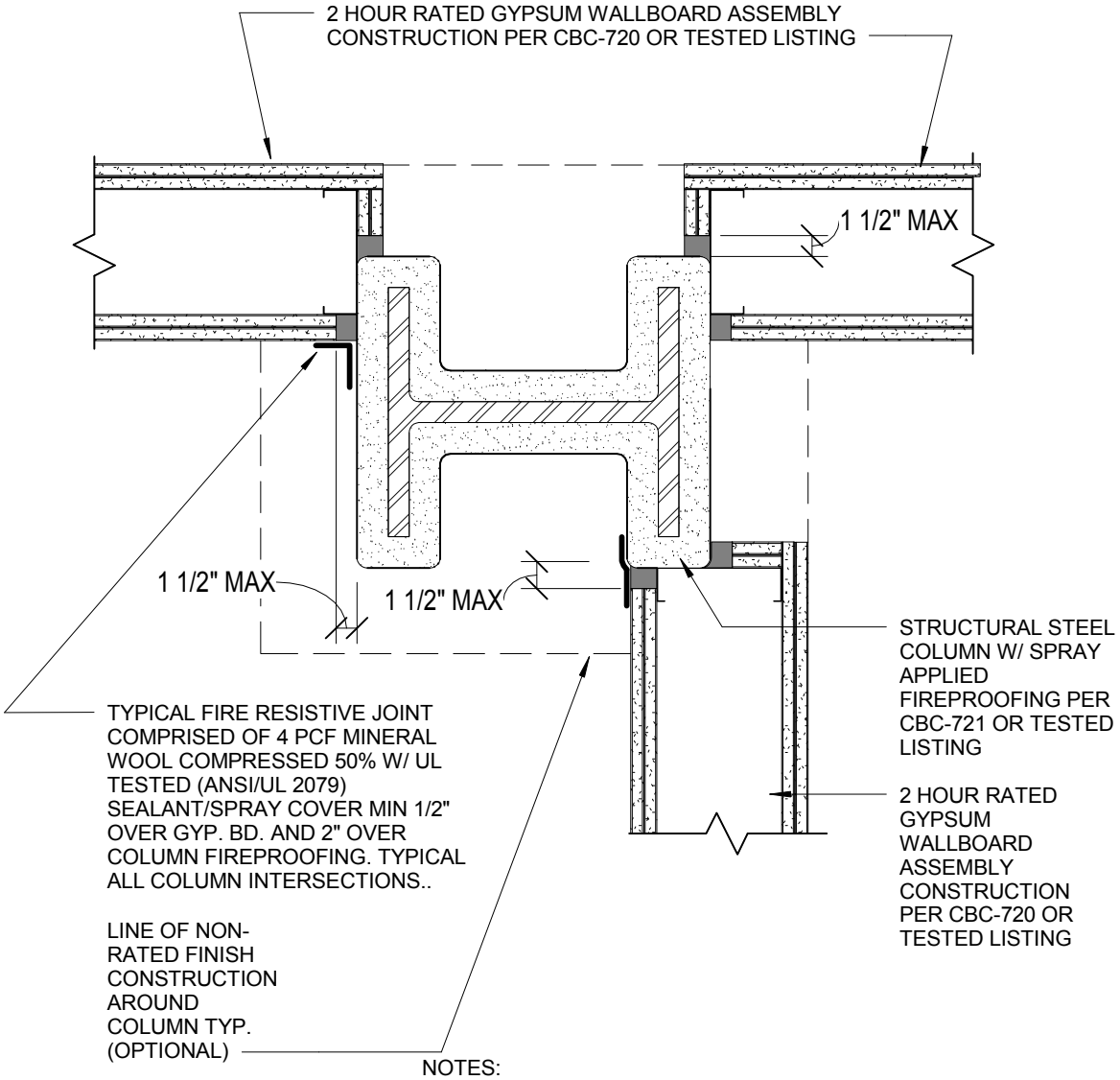

NOTES:
1. MAXIMUM SEPARATION BETWEEN SIDE OF GYPSUM WALLBOARD AND FACE OF FIREPROOFING IS 1 1/2".
2. THE FIRE RESISTIVE RATING OF STEEL COLUMN MUST BE EQUAL OR GREATER THAN WALL RATING.
3. "WET" THICKNESS OF SEALANT TO BE MIN. 1/8" TESTED IN ACCORDANCE WITH ASTM E1966 (ANSI/UL 2079).
4. SEE FR2.00, FR2.01, FR2.02 FOR JOINT DESCRIPTION

Section Title : OSHPD FIRE RESISTIVE STANDARD DETAILS	OPD No:
Sheet Title : INTERSECTION OF 2-HR-FR PARTITION, WALL AND BARRIER AT PROTECTED COLUMN	FR2.17

2/18/2014 8:14:09 AM

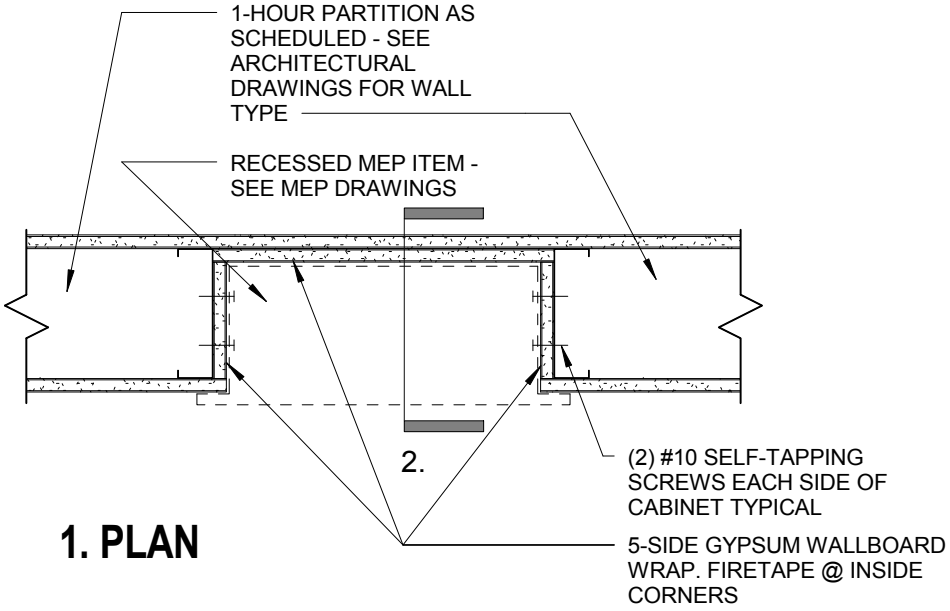

1. PLAN

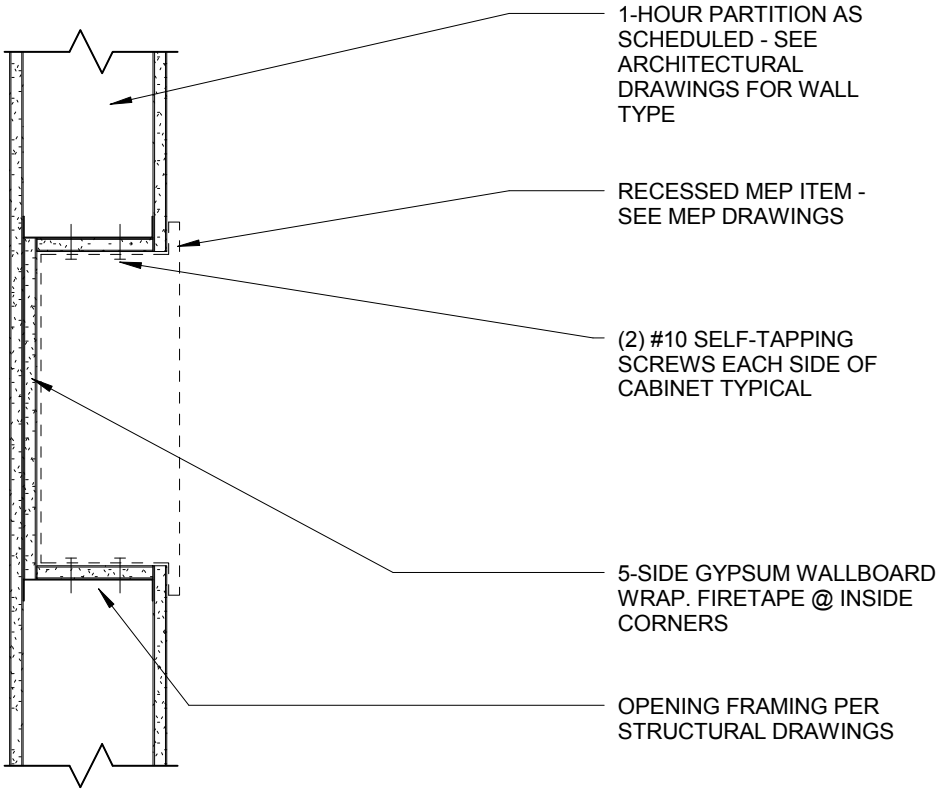

2. SECTION

Section Title : OSHPD FIRE RESISTIVE STANDARD DETAILS	OPD No:
Sheet Title : 1 HR. "5-SIDED BOX" @ RECESSED M.E.P. CABINETS	FR3.01

2/18/2014 8:14:09 AM

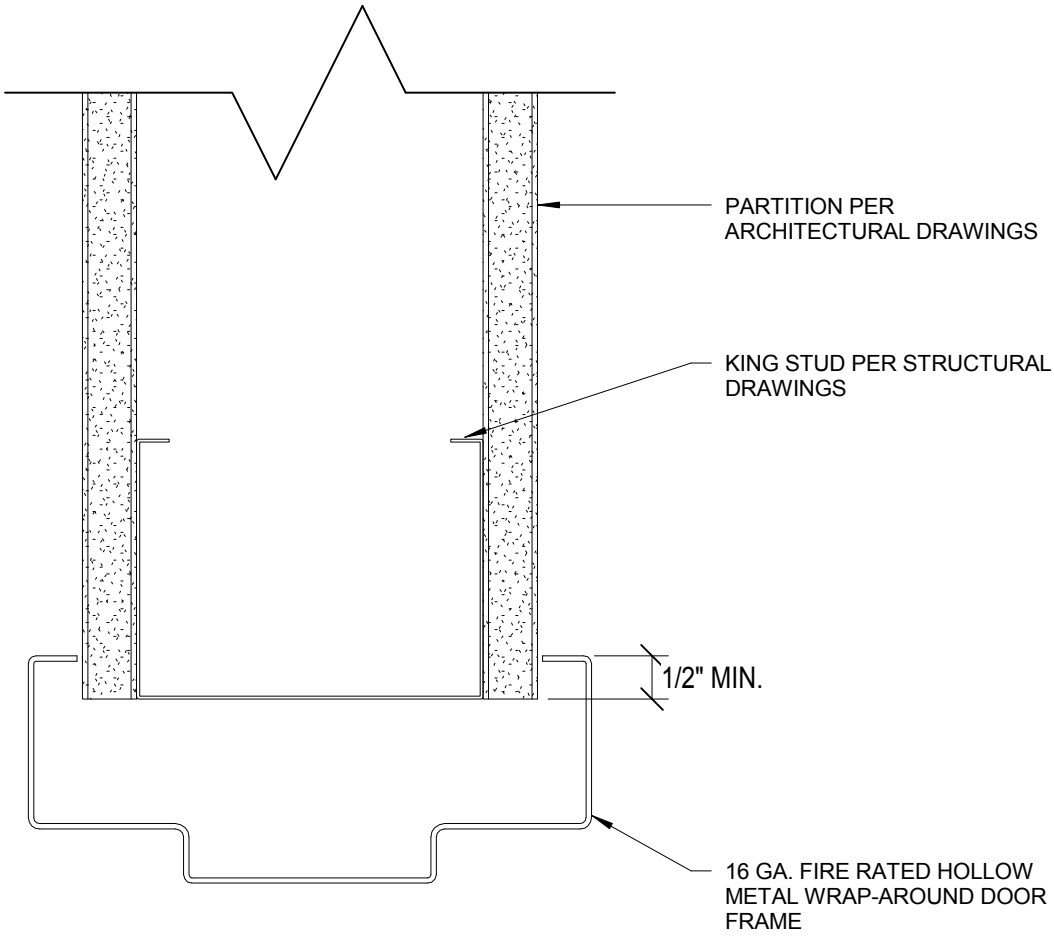

Section Title : OSHPD FIRE RESISTIVE STANDARD DETAILS	OPD No:
Sheet Title : HOLLOW METAL DOOR JAMB @ 1 HR-RATED WALLS	FR3.02

2/18/2014 8:14:09 AM

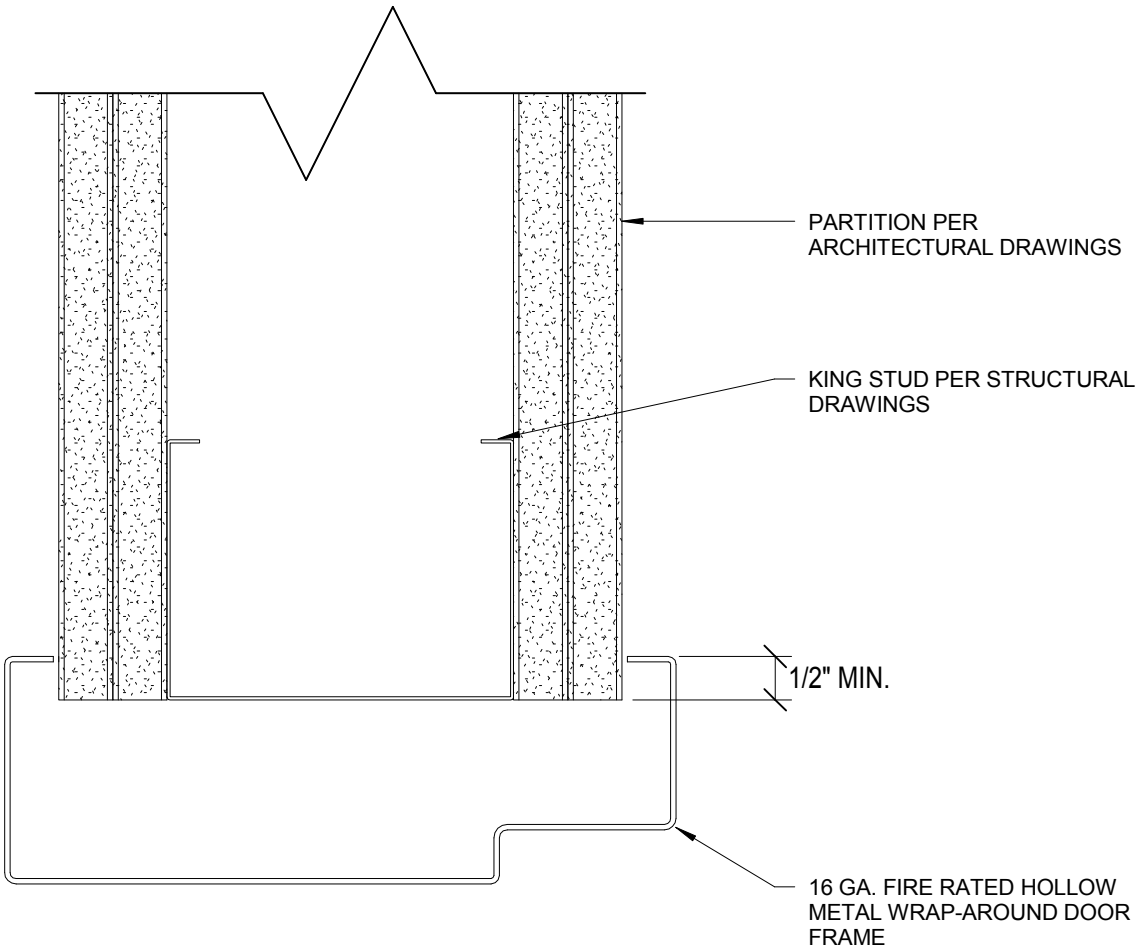

Section Title : OSHPD FIRE RESISTIVE STANDARD DETAILS	OPD No:
Sheet Title : HOLLOW METAL DOOR JAMB @ 2HR-RATED WALL	FR3.03

2/18/2014 8:14:10 AM

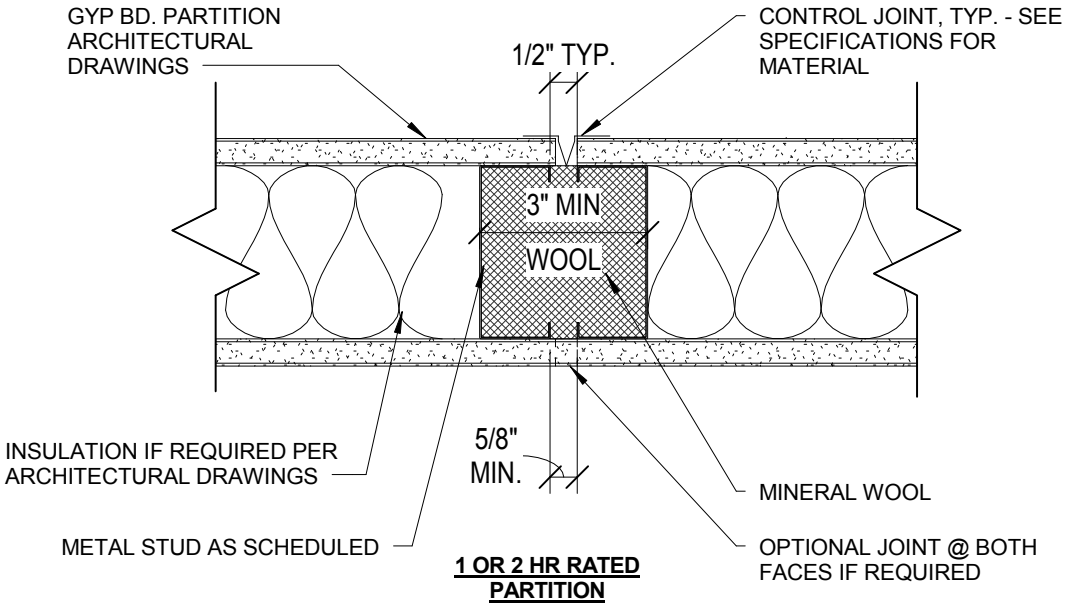

1 OR 2 HR RATED PARTITION

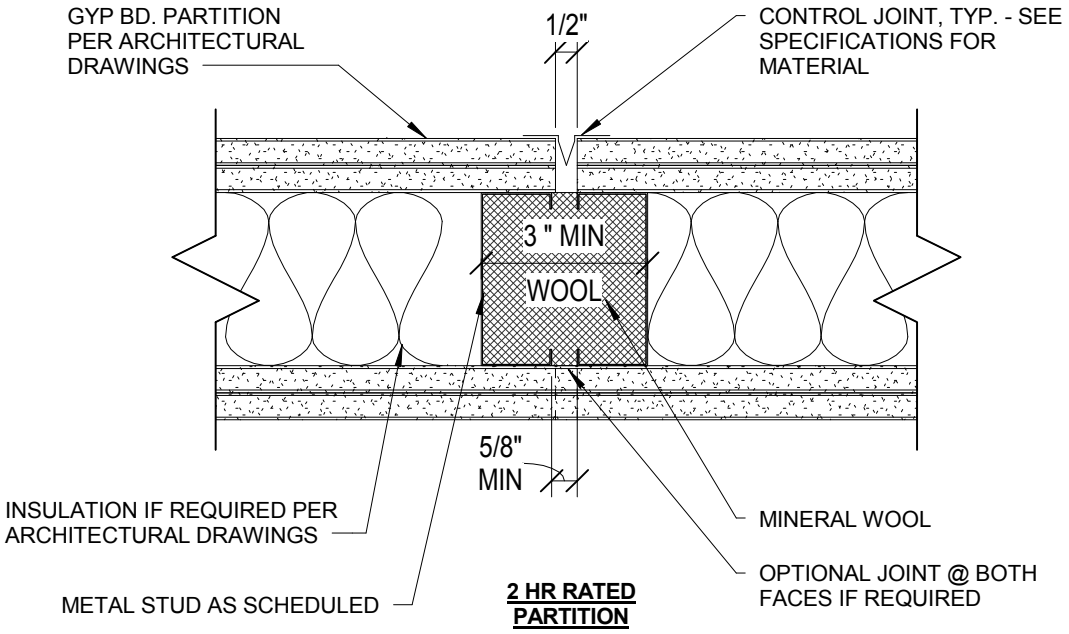

2 HR RATED PARTITION

NOTE:
CONTROL JOINT MATERIAL MAY TERMINATE 6" ABOVE CEILING LINE. CONTINUE JOINT WITH GYP. BD. TAPE - DO NOT FILL JOINT WITH TAPING COMPOUND.

Section Title : OSHPD FIRE RESISTIVE STANDARD DETAILS	OPD No:
Sheet Title : GYP. BD. CONTROL JOINT @ RATED PARTITIONS - MINERAL WOOL	FR3.04

2/18/2014 8:14:10 AM

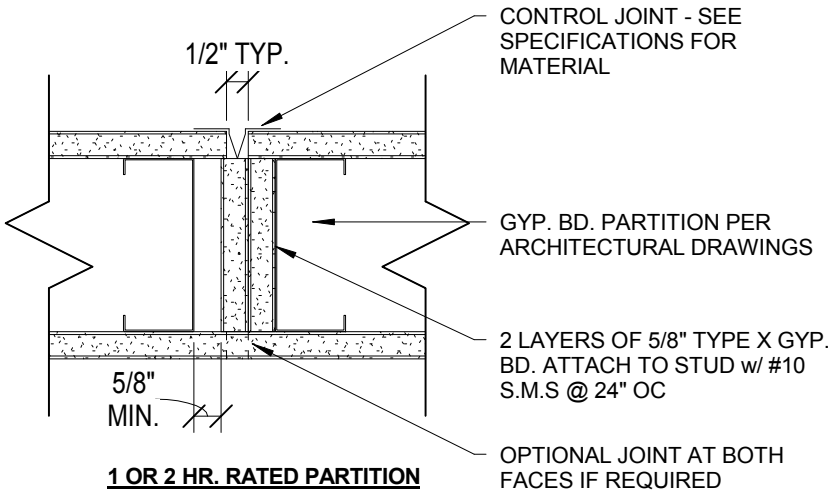

1 OR 2 HR. RATED PARTITION

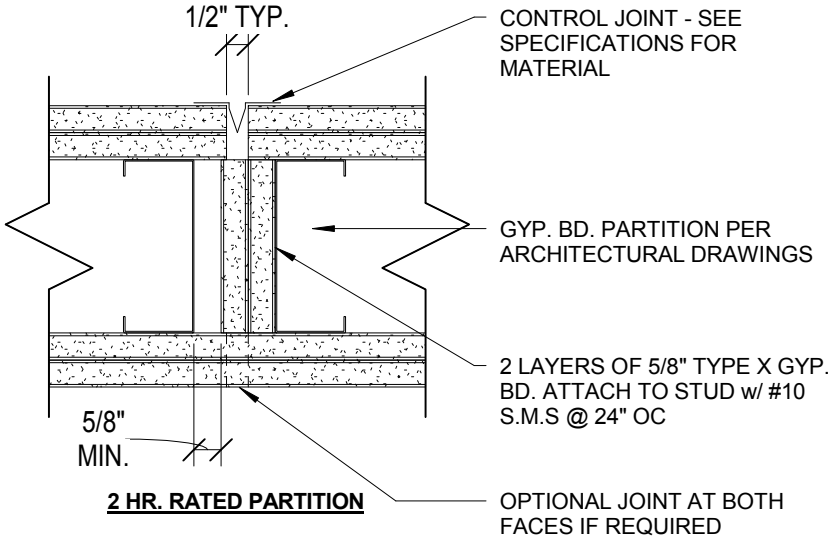

2 HR. RATED PARTITION

NOTE:
CONTROL JOINT MATERIAL MAY TERMINATE 6" ABOVE CEILING LINE. CONTINUE JOINT WITH GYP. BD. TAPE - DO NOT FILL JOINT WITH TAPING COMPOUND.

Section Title : OSHPD FIRE RESISTIVE STANDARD DETAILS	OPD No:
Sheet Title : GYP. BD. CONTROL JOINT @ RATED PARTITIONS - GYP. BD.	FR3.05

2/18/2014 8:14:11 AM

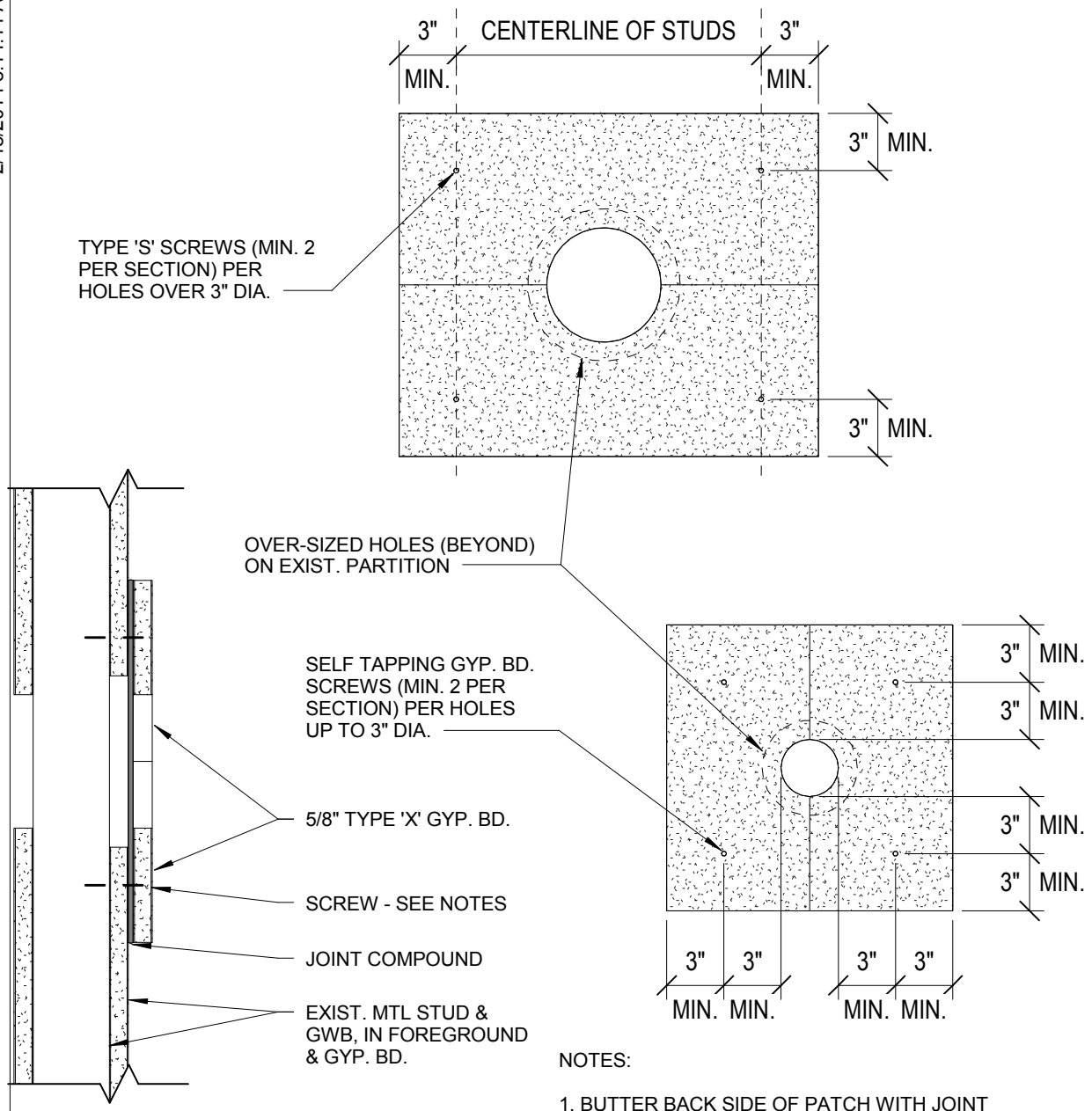

NOTES:

1. BUTTER BACK SIDE OF PATCH WITH JOINT COMPOUND OR GYPSUM FIRE SEALANT

2. LEAVE ALL SCREWS EXPOSED

Section Title : OSHPD FIRE RESISTIVE STANDARD DETAILS	OPD No:
Sheet Title : RATED WALL BLOW-OUT PATCH @ PENETRATION	FR3.06

2/18/2014 8:14:11 AM

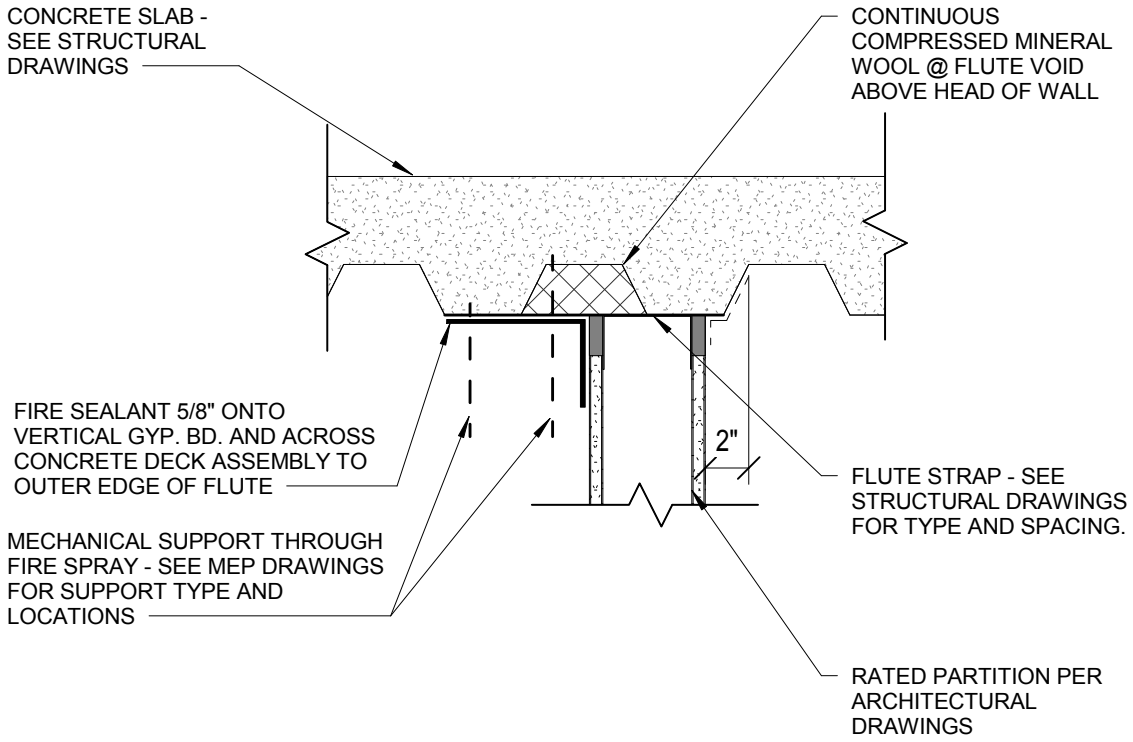

Section Title : OSHPD FIRE RESISTIVE STANDARD DETAILS	OPD No:
Sheet Title : PENETRATION REPAIR AT TOP OF WALL	FR3.07

2/18/2014 8:14:12 AM

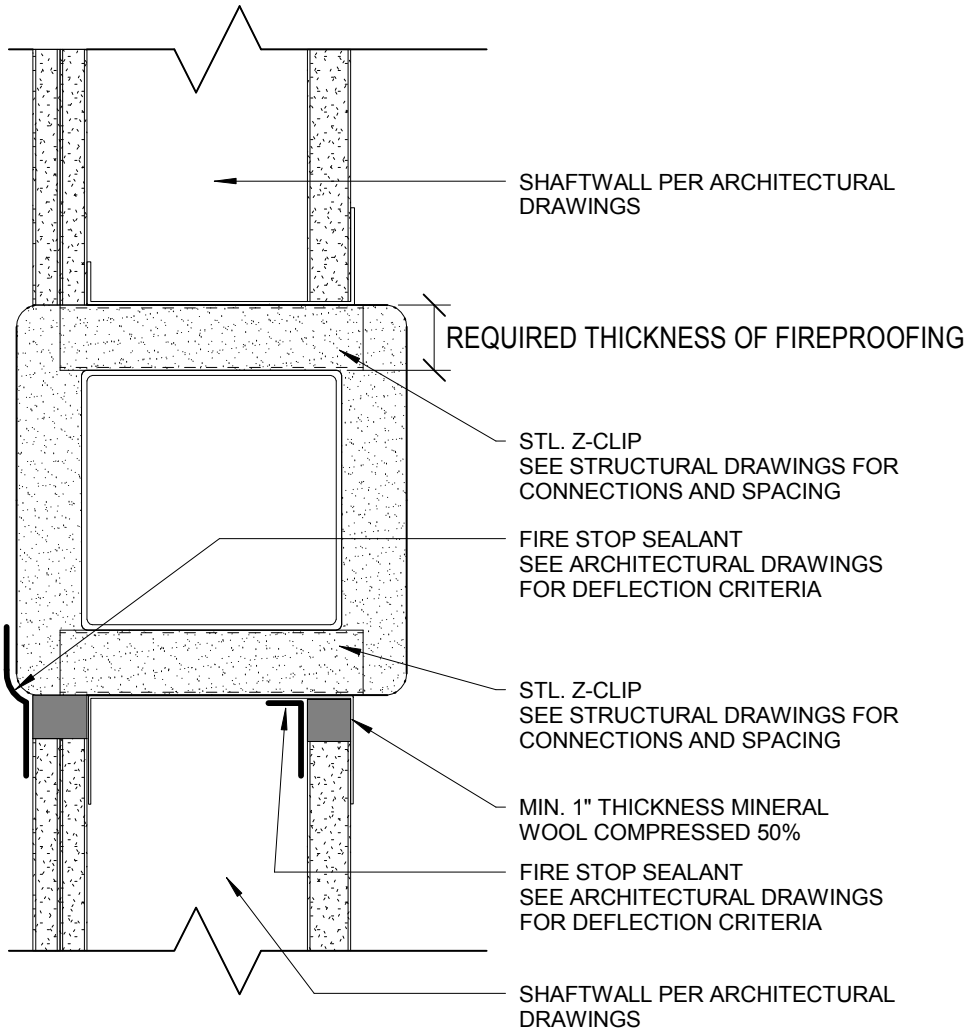

Section Title : OSHPD FIRE RESISTIVE STANDARD DETAILS	OPD No:
Sheet Title : SHAFT WALL @ INTERMEDIATE BEAM	FR3.08

2/18/2014 8:14:12 AM

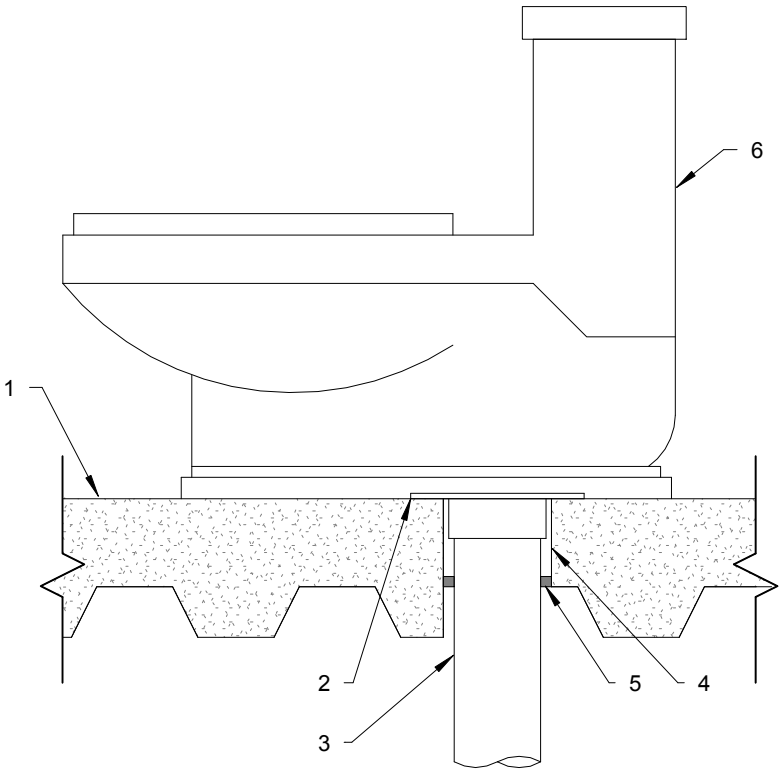

1. CONCRETE FLOOR OVER METAL DECKING ASSEMBLY (MINIMUM 2-1/2" THICK) (2HR. FIRE-RATING).
2. CAST IRON CLOSET FLANGE SIZED TO ACCOMMODATE DRAIN PIPE AND SECURED TO CONCRETE FLOOR WITH CONCRETE ANCHORS.
3. MAXIMUM 4" NOMINAL DIAMETER CAST IRON PIPE.
4. MINERAL WOOL (MIN. 4 PCF DENSITY) TIGHTLY PACKED AND RECESSED FROM BOTTOM OF CONCRETE FLOOR TO ACCOMMODATE SEALANT.
5. INTUMESCENT FIRESTOP SEALANT.
6. FLOOR MOUNTED WATER CLOSET.

NOTES: 1. MAXIMUM DIAMETER OF OPENING = 5"
2. ANNULAR SPACE = MINIMUM 3/8"

Section Title : OSHPD FIRE RESISTIVE STANDARD DETAILS	OPD No:
Sheet Title : FLOOR SLAB PENETRATION OR WATER CLOSET WASTE LINE	FR4.01

2/18/2014 8:14:12 AM

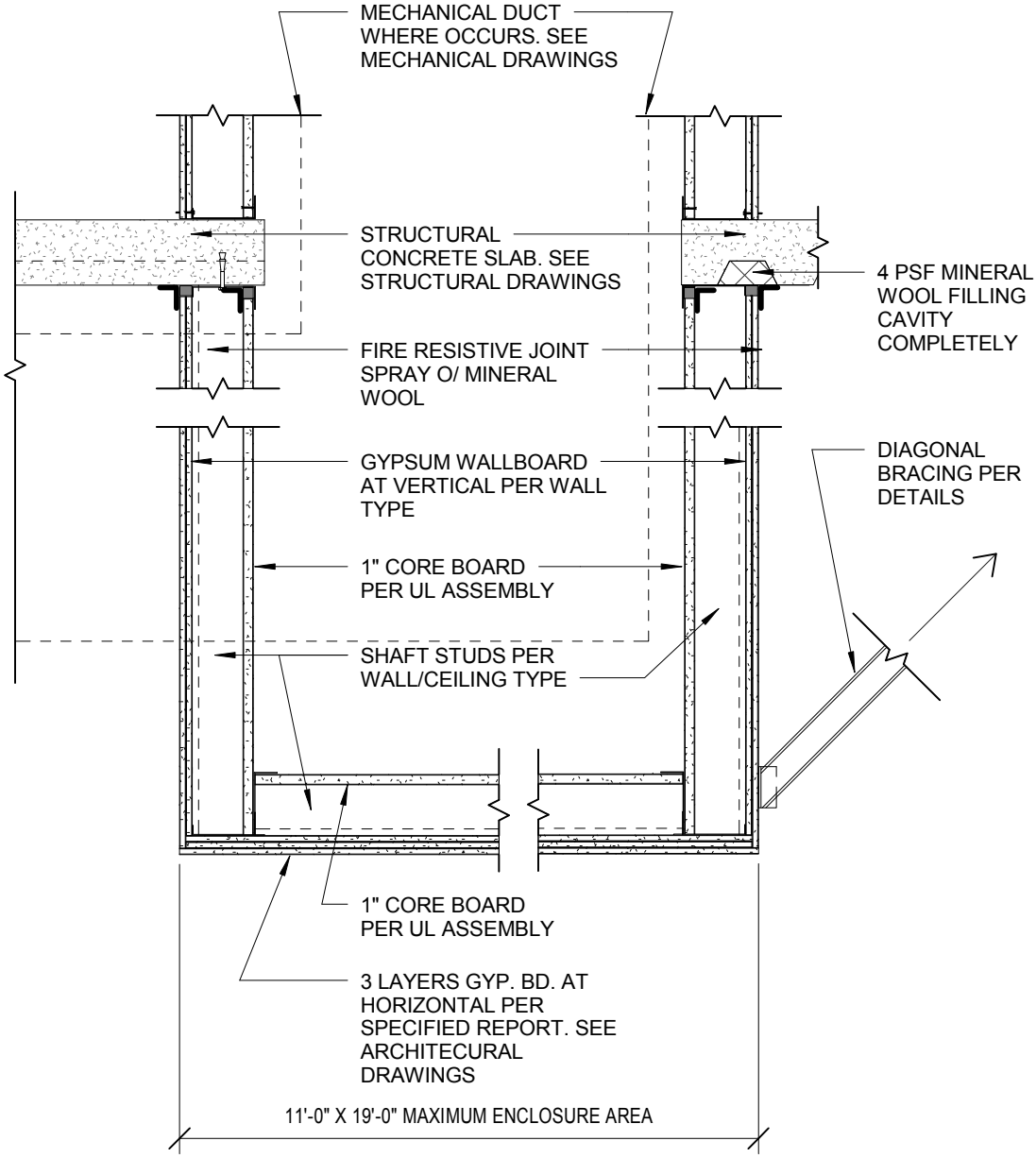

NOTES:
1. DETAIL BASED ON ICBO EVALUATION REPORT ER-3579.
2. REPORTS NER-258, NER-506, ER-2541, AND ER-4924 MAY BE SUBSTITUTED FOR ER-3579 WITH APPROPRIATE ALTERATIONS TO HORIZONTAL DRYWALL CONFIGURATION.
3. PROVIDE REPORT ON DOCUMENTS OF RECORD AND REFERENCE LOCATION.

Section Title : OSHPD FIRE RESISTIVE STANDARD DETAILS	OPD No:
Sheet Title : VERTICAL DUCT SHAFT BOTTOM DETAILS	FR4.02

This page left intentionally blank.

oshpd Office of Statewide Health Planning and Development

Hospital Building Safety Board
400 R Street, Suite 200
Sacramento, California 95811-6213
(916) 440-8453
Fax (916) 324-9118
http://www.oshpd.ca.gov/Boards/HBSB/index.html

HOSPITAL BUILDING SAFETY BOARD
Standard Details Committee

Thursday, May 15, 2014
10:00 a.m. - 1:30 p.m.

Office of Statewide Health Planning and Development
400 R Street, Suite 452
Sacramento, CA 95811
(916) 440-8453
and
Metropolitan Water District Headquarters
700 N. Alameda Street, Suite 2-546
Los Angeles, CA 90012
(213) 897-0166

Committee Members Present
Bert Hurlbut, Chair
Michael O'Connor, Vice-Chair
Rami Elhassan
Eric Johnson
Scott Karpinen
Bruce Macpherson
Arlee Monson

John Egan (HBSB)

OSHPD Staff
Paul Coleman, FDD Deputy Director
Brett Beekman
Gary Dunger
Mohammad Karim
Chris Tokas

HBSB Staff
Linda Janssen, Executive Director
Cathy Kane
Evett Torres
Kathi Zamora, FDD

1. Welcome and Introductions

Committee Chair Bert Hurlbut brought the meeting to order. He invited the participants to introduce themselves.

Mr. Hurlbut stated that the objective of the meeting was to get the Fire Life Safety Details cleaned up. Kale Wisnia will input the changes and send them on to Mr. Dunger for final review. They will then be posted on the website.

(3.) Review the draft Fire Life Safety Details

Mr. Monson led the review.

- The Narrative is patterned after the Partitions and Ceiling Narratives. Mr. Dunger noted that #2 appears twice. He also suggested a bullet point #D for #2: "These OPDs may not be used as a basis for an Engineering Judgment."
- The Flowchart is patterned after other OPDs. It is broken down by the type of detail – floor, wall, etc.
- The General Notes focus on general code issues for Fire Life Safety and fire protection. Mr. Dunger pointed out the problem with actual code references: they will have to be edited with every code cycle. Mr. Coleman responded that these details are only good for a code cycle; when a new code comes out the details have to be reviewed anyway.
- Mr. Karim stated that the code cycle number will be shown in two places: the watermark and the footer.

Discussion and Public Input

Mr. Dunger expressed concern with the 1½" maximum gap for the connection of wallboard to the fireproofing.

The group discussed pinch points – the single point of connection of two membranes of the fire resistive wall. Mr. Coleman suggested having them 1½" or the thickness of the fireproofing, whichever is greater.

An Interested Party asked about the first three details: in the second option where the column is rotated 90°, he confirmed that it is assumed that the column can be rotated in either direction.

The group agreed that on all applicable details, each column side needs to be firesprayed.

Mr. Dunger commented that “mineral wool-type fitting” should be foil faced for a smoke seal, or it should be sprayed (mineral wool doesn’t have much smoke resistance). It can be on either face.

After discussing the 1/2" measurement on FR1.33, the group decided to specify “1/2" maximum.

Mr. Dunger noted that FR1.34 would also be a good application to use foil faced on one side or spray material.

Mr. Dunger and Mr. Monson discussed the problem of rated walls terminating with glass. In a fire scenario, the glass will be blown out. The best that can be done is to keep the smoke from going from one side of the wall to the other.

For the details showing glazing, Mr. Donelan suggested removing the moderate cuts off the gyp board; Mr. Monson said they would show a molding strip. The group discussed not showing miters at the joint corners.

The group discussed problems with the details on mullions and the possibility of using UL-rated mullions, but not a built condition.

For FR1.37 and FR1.38, the group agreed on the need to define structural versus non-structural mullions.

For FR1.39, Mr. Dunger pointed out that there is already a wall-to-wall joint system that is very similar, but it is for a structural wall. He appreciated the distinction, but FR1.39 should match the structural wall dimensions.

Mr. Coleman commented on the 5/8" rather than 1/2" minimum fire sealant measure on FR1.40.

The group discussed the issue of thickness for 2-hour walls. Mr. Dunger said he would do some research.

Many of the details needed to have black lines added.

Mr. Dunger suggested adding a “shiny 90” to one of the details – a lightweight 90° metallic angle.

Mr. Monson suggested changing one of the Notes to specify staggering the joints.

For FR3.06, the group discussed having four screws in drywall to drywall rather than two screws; this is best practice.

For FR3.07, Mr. Dunger pointed out that the top of wall detail is not the issue – it is the supports that penetrate the spray. Mr. Coleman suggested renaming the detail.

Mr. Karpinen asked about having a 6” rated wall with a perpendicular pipe going through. Can you have a hanger inside the rated wall? The group agreed that you can put anything inside a rated wall as long as it doesn’t penetrate.

For FR3.08, the group agreed that you would not see Z-clips on a vertical tube – it should be horizontal.

Mr. Dunger noted that he had received comments on Note #2 of FR4.01 regarding the cast iron flange – it doesn’t work with a concrete anchor.

For FR4.02, the group objected to the placement of a slip joint. Mr. Dunger also felt that the intent of the detail should not be how to build a head of wall system, but how to build a suspended shaft. The group suggested referencing the head of wall system architectural detail for those who need that.

Mr. Dunger added that some of the information shown is not needed because it is a standard J track.

Mr. Hurlbut stated that for next steps, Mr. Dunger would submit his handwritten comments; then Mr. Wisnia would input them and send them back. The details do not need to go back to the committee after that.

MOTION: (M/S/C/) [Karpinen/]

The Board voted unanimously to recommend the details, with the comments noted, for OSHPD review and approval.

4. Discuss MEP Standard Details

Mr. Hurlbut noted that most Mechanical, Electrical, and Plumbing details end up being structural in nature. Many are listed as assemblies or are pre-approved with ISAT, TOLCO, Mason, etc. Mr. Monson asked if they truly are pre-approved; Mr. Karim responded that TOLCO, Mason, and ERICO are.

Mr. Hurlbut felt that for the HBSB to come up with MEP details would be very difficult because they would be competing with industry. Mr. Johnson noted that working with

the ISATs on the team is not a major fiasco, as long as someone on the team is going to carry that work.

5. Comments from the Public/Board Members on Issues not on this Agenda

There were no further comments.

6. Adjournment

Mr. Hurlbut adjourned the meeting at 11:45 a.m.

This page left intentionally blank.