APPLICATION FOR OSHPD SPECIAL SEISMIC CERTIFICATION PREAPPROVAL (OSP)

OFFICE USE ONLY	
APPLICATION #:	OSP – 0048 – 10

OSHPD Special Seismic Certification Preapproval (OSP)

Type: ☐ New ☒ Renewal

Manufacturer Information

Manufacturer: CLIMACOOL Corp.

Manufacturer's Technical Representative: Gus Olivera

Mailing Address: 15 S. Virginia Avenue, Oklahoma City, OK 73106

Telephone: (405) 815-3011 Email: golivera@climacoolcorp.com

Product Information

Product Name: The Ultimate (UCW/H) Series Water Cooled Modular Chiller and CoolLogic Master Control Panel

Product Type: Water Cooled Modular Chiller and Master Control Panel

Product Model Number: UCW/H030, UCW/H050, UCW/H070, and CoolLogic Master Control Panel
(List all unique product identification numbers and/or part numbers)

General Description: Modular Chillers and Master Control Panel. Seismic enhancements made to the test units shall be incorporated into the production units.

Mounting Description: Chillers: rigid base mounted and vibration spring isolated.
Master Control Panel: rigid wall mounted.

Applicant Information

Applicant Company Name: CLIMACOOL Corp.

Contact Person: Gus Olivera

Mailing Address: 15 S. Virginia Avenue, Oklahoma City, OK 73106

Telephone: (405) 815 0311 Email: golivera@climacoolcorp.com

I hereby agree to reimburse the Office of Statewide Health Planning and Development review fees in accordance with the California Administrative Code, 2013.

Signature of Applicant: Date: 3/16/2015

Title: Director of Engineering Company Name: CLIMACOOL Corp.

California Licensed Structural Engineer Responsible for the Engineering and Test Report(s)

Company Name: Buehler & Buehler Structural Engineers, Inc

Name: Scott Hooker California License Number: S3937

Mailing Address: 600 Q St. Suite 200, Sacramento, CA 95811

Telephone: (916) 443 0303 Email: shooker@bbse.com

Supports and Attachments Preapproval

☐ Supports and attachments are preapproved under OPM- _____
(Separate application for OSHPD Preapproval of Manufacturer's Certification (OPM) of Supports and attachments is required)

☒ Supports and attachments are not preapproved

Certification Method

☒ Testing in accordance with: ☒ ICC-ES AC156

☐ Other (Please Specify): _____

Testing Laboratory

Company Name: Curtiss Wright Flow Control Company - TRENTEC

Contact Name: Marie S. Nemier

Mailing Address: 4600 East Tech Drive, Cincinnati, OH 45245

Telephone: (513) 528 7900 Email: mnemier@curtisswright.com

Seismic Parameters

Design in accordance with ASCE 7-10 Chapter 13: ☒ Yes ☐ No

Design Basis of Equipment or Components (F_p/W_p) = 1.39 / 4.34 (Chiller – Rigid / Isolated, 1.45 (Control Box)

S_{DS} (Design spectral response acceleration at short period, g) = 1.93

a_p (In-structure equipment or component amplification factor) = 1.0 / 2.5 (Chiller - Rigid / Isolated), 2.5 (Control Box)

R_p (Equipment or component response modification factor) 2.5 / 2.0 (Chiller – Rigid / Isolated), 6.0 (Control Box)

Ω_0 (System overstrength factor) = 2.0

I_p (Importance factor) = 1.5

z/h (Height factor ratio) = 1.0

Equipment or Component Natural Frequencies (Hz) See Table 3

Overall dimensions and weight (or range thereof) = See Table 1

Equipment or Components @ grade designed in accordance with ASCE 7-10 Chapter 15 ☐ Yes ☒ No

Design Basis of Equipment or Components (V/W) = _____

S_{DS} (Design spectral response acceleration at short period, g) = _____

S_{D1} (Design spectral response acceleration at 1 second period, g) _____

R (Response modification coefficient) = _____

Ω_0 (System overstrength factor) = _____

C_d (Deflection amplification factor) = _____

I_p (Importance factor) = 1.5

Height to Center of Gravity above base = _____

Equipment or Component Natural Frequencies (Hz) = _____

Overall dimensions and weight (or range thereof) = _____

Tank(s) designed in accordance with ASME BPVC, 2010 ☐ Yes ☒ No

List of Attachments Supporting Special Seismic Certification

☒ Test Report(s) ☐ Drawings ☐ Calculations ☒ Manufacturer's Catalog

☒ Other(s) (Please Specify): Operability Test Letters

OSHPD Approval (For Office Use Only) – Approval Expires on December 31, 2019

Signature: _____ Date: 9/15/2016

Print Name: M. R. Karim Title: SHFR

Special Seismic Certification Valid Up to : S_{DS} (g) = 1.93 z/h = 1.0

Condition of Approval (if applicable): **Chiller with seismic bracket per attachment # 2 can be installed with or without vibration isolators (excludes all non-factory installed accessories). ClimaCool UC*COOLLOGIC Control Panel (Model: S10S0261N01) is approved for wall mounted configuration only.**

Table 1. Certified Product List

UCW/H Water Cooled Modular Chiller

Model Number [2]	*Nominal Capacity*	*Tested/ Interpolated*	Length (in)	Width (in)	Height (in)	Operating Weight[1] (lbs)
UCW/H030	**208/230/460/575/3/60**	**UUT-1**	**55 1/2**	**34 1/4**	**65 1/8**	**1,480**
UCW/H050	208/230/460/575/3/60	Interpolated	55 1/2	34 1/4	65 1/8	2,200
UCW/H070	**208/230/460/575/3/60**	**UUT-2**	**55 1/2**	**34 1/4**	**65 1/8**	**2,450**

1. Operating weight includes refrigerant charge, compressor oil, and water.
2. Certified units include seismic bracket kit shown in Attachment #2

CoreLogic Master Control Panel

Model Number	*Nominal Capacity*	*Tested/ Interpolated*	Length (in)	Width (in)	Height (in)	Operating Weight (lbs)
S10S0261N01	**N/A**	**UUT-3**	**7 3/4**	**24 1/2**	**24 1/4**	**50**

Table 2. Certified Sub-Component List

Compressor					
Part Number	***Nominal capacity***	***Voltage***	***Manufacturer***	***Material***	***Interpolated / Included With Test***
ZP182KCE	15 Tons	208/230-460-575	Copeland	Carbon Steel/Copper	UUT-1
ZP295KCE	25 Tons	208/230-460-575	Copeland	Carbon Steel/Copper	Interpolated
ZP385KCE	35 Tons	208/230-460-575	Copeland	Carbon Steel/Copper	UUT-2

Condenser Braze Plate Heat Exchanger			
Part Number	***Manufacturer***	***Material***	***Interpolated / Included With Test***
ACH-230DQ-166H	AlfaLaval	Stainless Steel 316/Copper	UUT-1
ACH-500DQ-142H	AlfaLaval	Stainless Steel 316/Copper	Interpolated
ACH-500DQ-166H	AlfaLaval	Stainless Steel 316/Copper	UUT-2

Evaporator Braze Plate Heat Exchanger			
Part Number	***Manufacturer***	***Material***	***Interpolated / Included With Test***
ACH-230DQ-142H	AlfaLaval	Stainless Steel 316/Copper	UUT-1
ACH-500DQ-118H	AlfaLaval	Stainless Steel 316/Copper	Interpolated
ACH-500DQ-142H	AlfaLaval	Stainless Steel 316/Copper	UUT-2

Control Box Assembly			
Part Number	***Manufacturer***	***Material***	***Interpolated / Included With Test***
S10S0261N01	ClimaCool	Galvanized Steel and others	UUT-3

Table 3. UUT Summary

Model Number	*Nominal Capacity*	*UUT Mark*	*Mounting*	*Excitation Direction*	*Frequency* (Hz)*	Length (in)	Width (in)	Height (in)	Operating Weight (lbs)
UCW/H030	30 ton	UUT-1	Rigid Base Mount	X	11.1	55 1/2	34 1/4	65 1/8	1,480
				Y	13.1				
				Z	22.0				
			With Spring Isolators	X	1.9				
				Y	2.3				
				Z	7.6				
UCW/H070	70 ton	UUT-2	Rigid Base Mount	X	9.2	55 1/2	34 1/4	65 1/8	2,450
				Y	7.2				
				Z	22.8				
			With Spring Isolators	X	2.2				
				Y	1.3				
				Z	7.0				
Control Panel (S10S0261N01)	N/A	UUT-3	Wall Mounted	X	N/A	7 3/4	24 1/2	24 1/4	50
				Y	N/A				
				Z	N/A				

* Frequencies are for units prior to ICC ES AC-156 testing.

Table 4. UUT Summary Sub-Component List

UUT-1 UCW/H030

Sub-Component	*Description*	*Part Number*	*Manufacturer*	*Material*
Header Tube Assembly	Header Tube Assembly	C28B0001N01	SHARP IRON LLC	Schedule 40 Steel
Cabinet Assembly	Cabinet Assembly	83P0201N02	CLIMATE MASTER	Galvanized Steel
Seismic Kit Assembly	Seismic Kit Assembly	83K0119N01	CLIMATE MASTER	Galvanized Steel
Condenser Braze Plate Heat Exchanger	Condenser Braze Plate Heat Exchanger	ACH-230DQ-166H	AlfaLaval	Stainless Steel 316/Copper
Evaporator Braze Plate Heat Exchanger	Evaporator Braze Plate Heat Exchanger	ACH-230DQ-142H	AlfaLaval	Stainless Steel 316/Copper
Compressor	15 Ton Compressor	ZP182KCE	Copeland	Steel/Copper

UUT-2 UCW/H070

Sub-Component	*Description*	*Part Number*	*Manufacturer*	*Material*
Header Tube Assembly	Header Tube Assembly	C28B0001N01	SHARP IRON LLC	Schedule 40 Steel
Cabinet Assembly	Cabinet Assembly	83P0201N01	CLIMATE MASTER	Galvanized Steel
Seismic Kit Assembly	Seismic Kit Assembly	83K0119N01	CLIMATE MASTER	Galvanized Steel
Condenser Braze Plate Heat Exchanger	Condenser Braze Plate Heat Exchanger	ACH-500DQ-166H	AlfaLaval	Stainless Steel 316/Copper
Evaporator Braze Plate Heat Exchanger	Evaporator Braze Plate Heat Exchanger	ACH-500DQ-142H	AlfaLaval	Stainless Steel 316/Copper
Compressor	35 Ton Compressor	ZP385KCE	Copeland	Steel/Copper

UUT-3 Control Box Assembly

Sub-Component	*Description*	*Part Number*	*Manufacturer*	*Material*
S10S0261N01	Control Box Assembly	S10S0261N01	ClimaCool	Galvanized Steel and others

Special Seismic Certification
OSHPD Preapproval
ClimaCool UCW/H Series Water Cooled Modular Chillers
CoolLogic Master Control Panel

Shake Table Test Setup Test #2

UUT Designation	UUT 3
Identification No.	Q0005-03-01-01
Model No:	S10S0261N01
Attachment Method	Wall Mounted w/ (8) 1/4" bolts

Seismic Parameters

Building Code	Test Criteria	S_{DS} (g)	z/h	Horizontal		Vertical	
				A_{FLX-H}	A_{RIG-H}	A_{FLX-V}	A_{RIG-V}
CBC 2013	AC 156	1.93	1.0	3.09g	2.32g	1.29g	0.51g

Overall View of Test Item #Q0005-03-01-01 ClimaCool UC* COOLLOGIC Control Panel, Model: S10S0261N01

Alternate View of Test Item #Q005-03-01-01

Notes: The UUTs were full of contents during the test.
After the test, the UUT was functional and the structural integrity of the compenent attachment and force-resisting systems was maintained.

Special Seismic Certification
OSHPD Preapproval
ClimaCool UCW/H Series Water Cooled Modular Chillers
CoolLogic Master Control Panel

Shake Table Test Setup Test #5

UUT Designation	UUT 1
Identification No.	Q0005-01-01-01
Model No:	UCW030AHASACM0S
Attachment Method	Unit mounted to C6x13 frame with (6) 5/8" diameter grade 8 bolts with 1 1/2" diameter oversized washers and beveled flat washers. C6 frame mounted to the table with (10) 1/2" diameter grade 8 bolts.

Seismic Parameters

Building Code	Test Criteria	S_{DS} (g)	z/h	Horizontal		Vertical	
				A_{FLX-H}	A_{RIG-H}	A_{FLX-V}	A_{RIG-V}
CBC 2013	AC 156	1.93	1.0	3.09g	2.32g	1.29g	0.51g

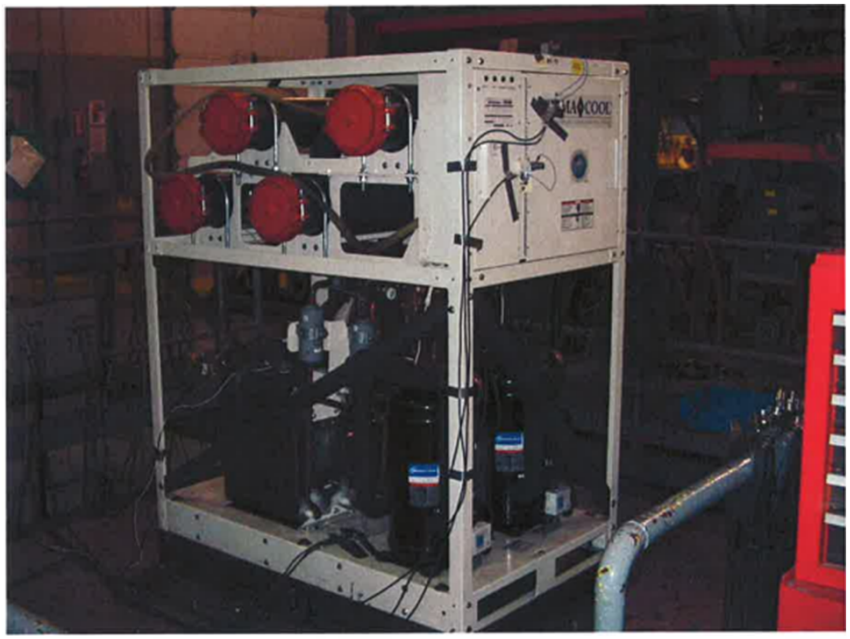

Overall View of Test Item #Q0005-01-01-01 ClimaCool Wtr 30-ton Chiller with UCH/W Header Bank End Cap Kit Model: UCW030AHASACM0S with UC*GC001 mounted on the C-Channel Base

Notes: The UUTs were full of contents during the test.
After the test, the UUT was functional and the structural integrity of the compenent attachment and force-resisting systems was maintained.

Shake Table Test Setup Test #6

UUT Designation	UUT 1
Identification No.	Q0005-01-01-01
Model No:	UCW030AHASACM0S
Attachment Method	Unit mounted to C6x13 frame with (6) 5/8" diameter grade 8 bolts with 1 1/2" diameter oversized washers and beveled flat washers. C6 frame is welded with (2) 4" lengths of 5/16" filllet weld to (4) Mason Spring Isolators (SLRS0-4).

Seismic Parameters

Building Code	Test Criteria	S_{DS} (g)	z/h	Horizontal		Vertical	
				A_{FLX-H}	A_{RIG-H}	A_{FLX-V}	A_{RIG-V}
CBC 2013	AC 156	1.93	1.0	3.09g	2.32g	1.29g	0.51g

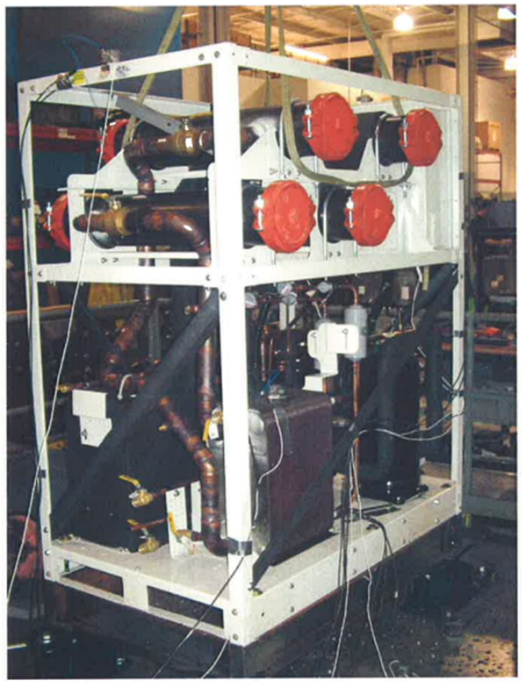

Overall View of Test Item #Q0005-01-01-01 ClimaCool Wtr 30-ton Chiller with UCH/W Header Bank End Cap Kit Model: UCW030AHASACM0S with UC*GC001 mounted on the C-Channel Base with Isolators

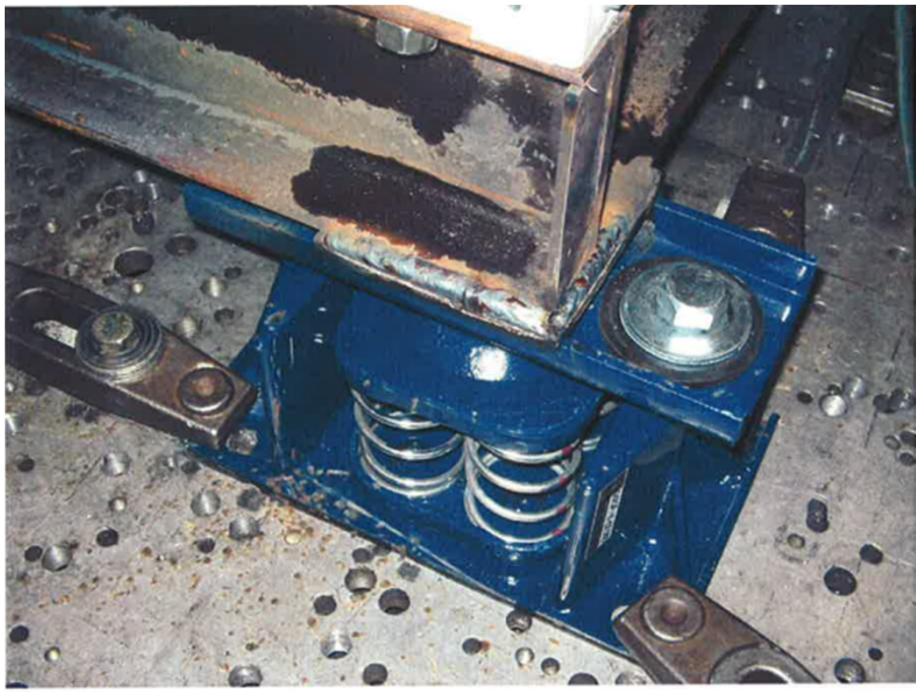

Close Up View of the Mason Industries Vibration Isolators P/N: SLRS0-4-C2-500

Notes: The UUTs were full of contents during the test.
After the test, the UUT was functional and the structural integrity of the compenent attachment and force-resisting systems was maintained.

Special Seismic Certification
OSHPD Preapproval
ClimaCool UCW/H Series Water Cooled Modular Chillers
CoolLogic Master Control Panel

Shake Table Test Setup Test #7

UUT Designation	UUT 2
Identification No.	Q0005-02-01-01
Model No:	UCW070AFASACM0S
Attachment Method	Unit mounted to C6x13 frame with (6) 5/8" diameter grade 8 bolts with 1 1/2" diameter oversized washers and beveled flat washers. C6 frame mounted to the table with (10) 1/2" diameter grade 8 bolts.

Seismic Parameters

Building Code	Test Criteria	S_{DS} (g)	z/h	Horizontal		Vertical	
				A_{FLX-H}	A_{RIG-H}	A_{FLX-V}	A_{RIG-V}
CBC 2013	AC 156	1.93	1.0	3.09g	2.32g	1.29g	0.51g

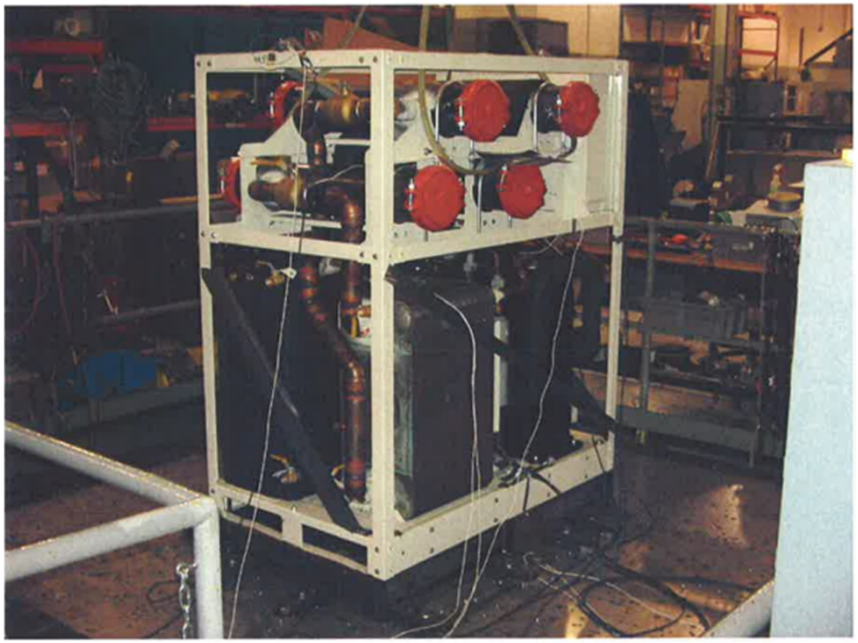

Overall View of Test Item #Q0005-02-01-01 ClimaCool Wtr 70-ton Chiller with UCH/W Header Bank End Cap Kit Model: UCW070AfASACM0S with UC*GC001 mounted on the C-Channel Base

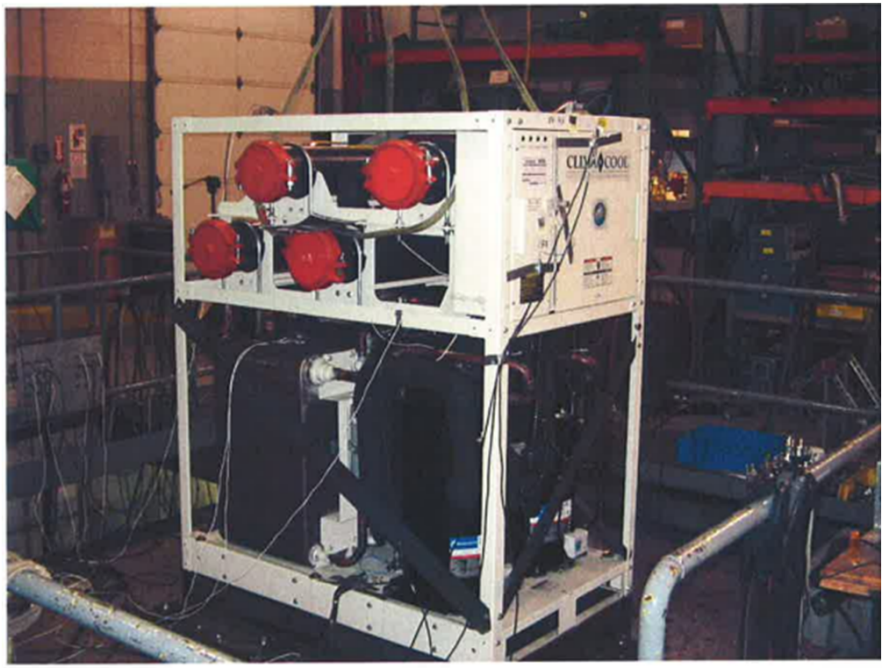

Alternate View of Test Item #Q0005-02-01-01

Notes: The UUTs were full of contents during the test.
After the test, the UUT was functional and the structural integrity of the compenent attachment and force-resisting systems was maintained.

Special Seismic Certification
OSHPD Preapproval
ClimaCool UCW/H Series Water Cooled Modular Chillers
CoolLogic Master Control Panel

Shake Table Test Setup Test #8

UUT Designation	UUT 2
Identification No.	Q0005-02-01-01
Model No:	UCW070AFASACM0S
Attachment Method	Unit mounted to C6x13 frame with (6) 5/8" diameter grade 8 bolts with 1 1/2" diameter oversized washers and beveled flat washers. C6 frame is welded with (2) 4" lengths of 5/16" filllet weld to (4) Mason Spring Isolators (SLRS0-4).

Seismic Parameters

Building Code	Test Criteria	S_{DS} (g)	z/h	Horizontal		Vertical	
				A_{FLX-H}	A_{RIG-H}	A_{FLX-V}	A_{RIG-V}
CBC 2013	AC 156	1.93	1.0	3.09g	2.32g	1.29g	0.51g

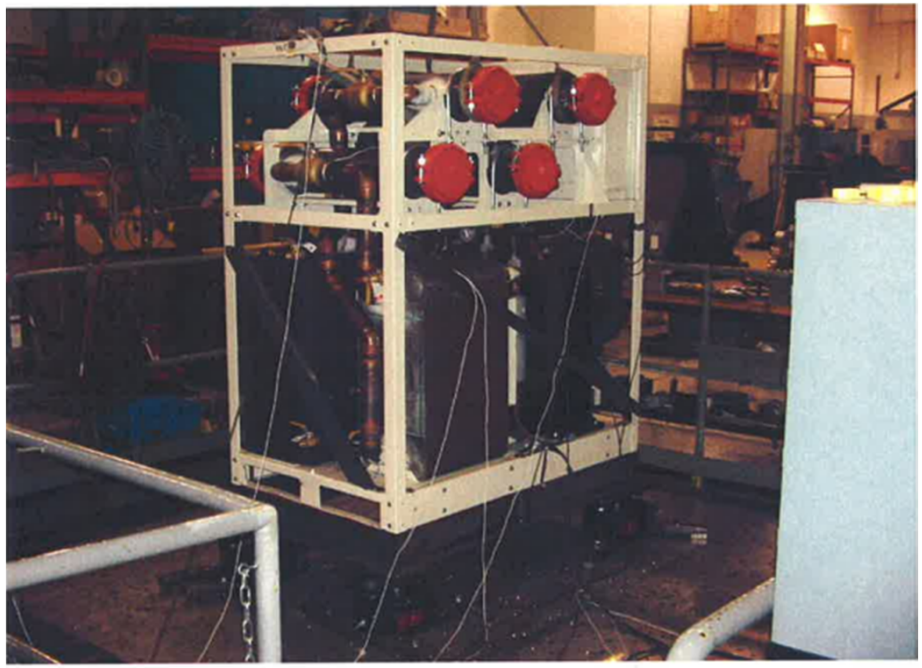

Overall View of Test Item #Q0005-02-01-01 ClimaCool Wtr 70-ton Chiller with UCH/W Header Bank End Cap Kit Model: UCW070AFASACM0S with UC*GC001 mounted on the C-Channel Base with Isolators

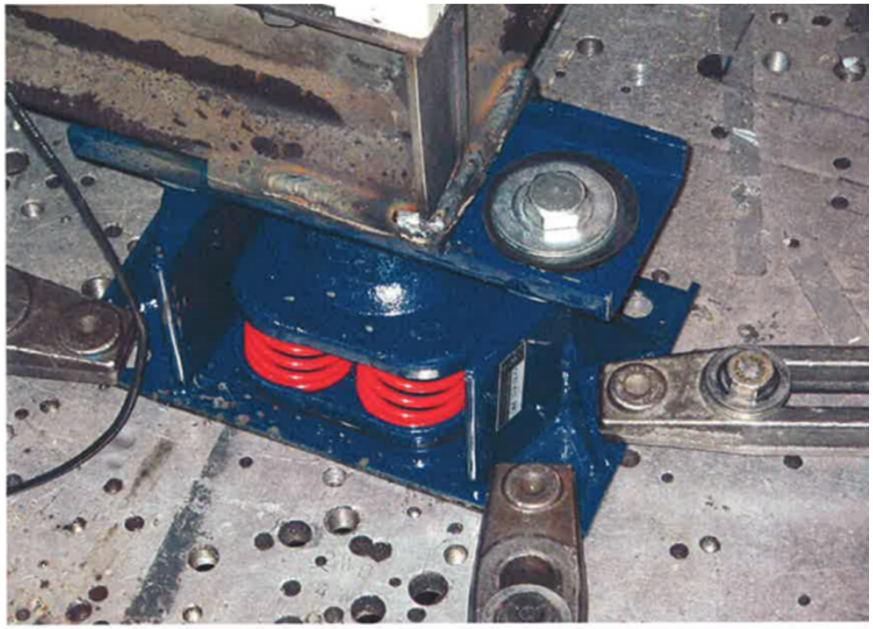

Close Up View of the Mason Industries Vibration Isolators P/N: SLRS0-4-C2-840

Notes: The UUTs were full of contents during the test.
After the test, the UUT was functional and the structural integrity of the compenent attachment and force-resisting systems was maintained.

Rigid Base Mount with C6 base frame

BUEHLER & BUEHLER STRUCTURAL ENGINEERS, INC.

JOB CLIMACOOL Special Seismic Certification
JOB NO. 510-00500 DATE 1/28/2010
CLIENT Climacool BY ALI SHEET NO. 3

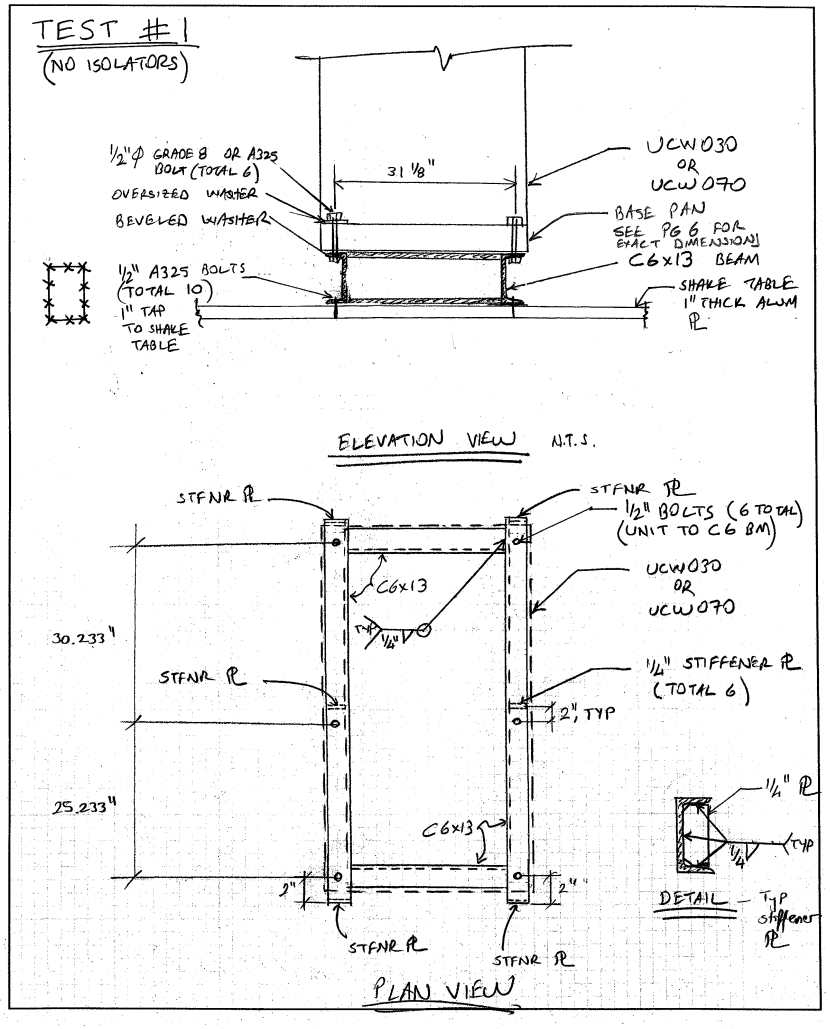

Spring Isolated with C6 base frame

BUEHLER & BUEHLER STRUCTURAL ENGINEERS, INC.

JOB CLIMACOOL Special Seismic Certif.
JOB NO. 510-00500 DATE 1/28/2010
CLIENT Climacool BY ALI SHEET NO. 4

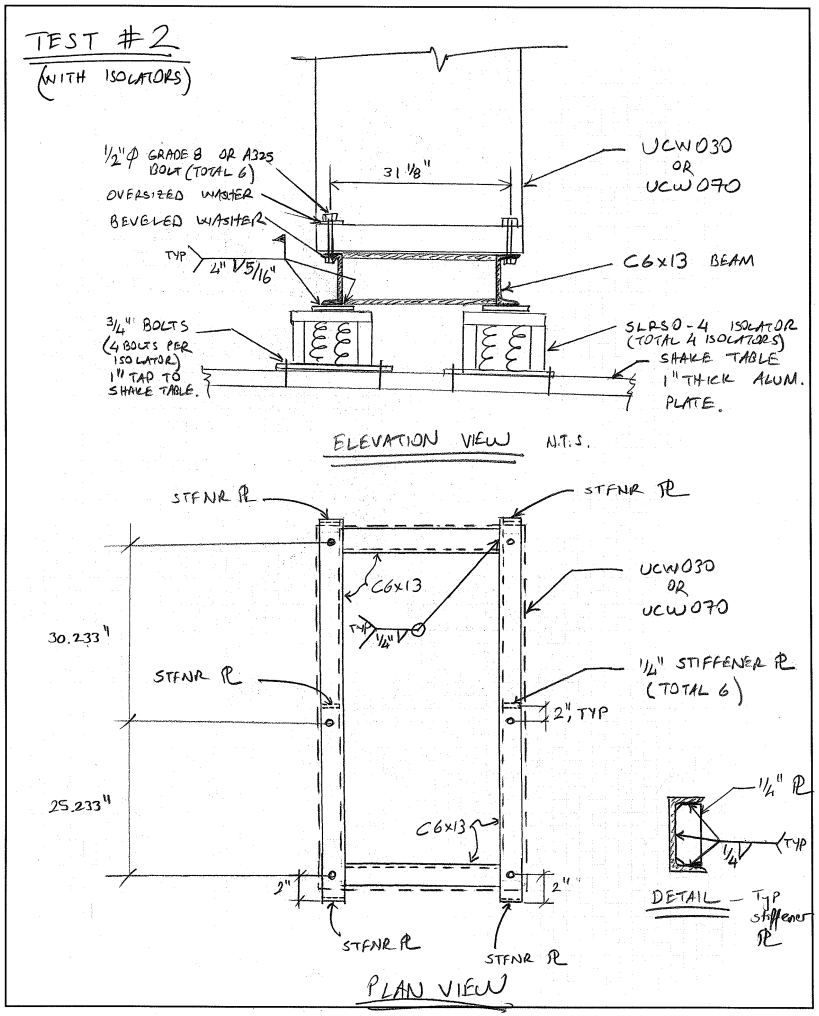

Model Number Nomenclature

Ultimate Chiller Solution Model Key

UC	W	030	A	F	A	S	A	C	0	0	S

Rejection Means
R = Remote Condenser (Air or Evap Cooled)
H = High Temperature
W = Water

Nominal Tons
015
025
030
050
070
085

Design Series
A

Voltage
F = 460/3/60
H = 208-230/3/60
N = 575/03/60
U = 380/3/50

Controls & Electrical
A = Standard Controls
B = 65 KAIC
X = Special Options

Compressor Type
D = Digital Scroll (30 Ton only)
S = Scroll
X = Special Options

Refrigerant
A = R-410A
B = R-134a (For use with hot water temperatures ≥ 140°, not available in 85 ton)
X = Special Options

Application
C = Cooling
H = Heat Recovery
P = Potable Water
R = Reverse Cycle (Heat Pump)
S = Simultaneous Heating & Cooling Heat Pump (6 headers)
W = Simultaneous Heating & Cooling - Heat Recovery (6 headers)
T = Simultaneous Heating & Cooling -Cooling Dual Source (6 headers)
V = Simultaneous Heating & Cooling - Heating Dual Source (6 headers)
X = Special Options

Water Isolation Valves
0 = (None)
1 = 400 psi component rating
B = Evap & Condsr Motorized Valves
E = Evap. (less Manual Condsr Valves for Air Cooled)
M = Manu (less Manual Condsr Valves for Air Cooled)
X = Special Options
Y = STAINLESS STEEL HEADER

Refrigerant Options
0 = (None)
B = Hot Gas Bypass - Both Circuits
(Not available with Heat Pump application)
P = Hot Gas Bypass with Pressure Relief Valves
R = Pressure Relief Valves (standard for all UCR's)
X = Special Options
Y = ISOLATION VALVES FOR COMPRESSOR

Model Configuration
S = Standard
X = Special Options
X = 1" INSULATION
Y = INSULATIONED COND BLOCK
1 = ALL PIPING AND HX BLOCK INSUALTED
2 = SPLIT UNIT

FOR REFERENCE ONLY

Attachment #2 Seismic Bracket Kit

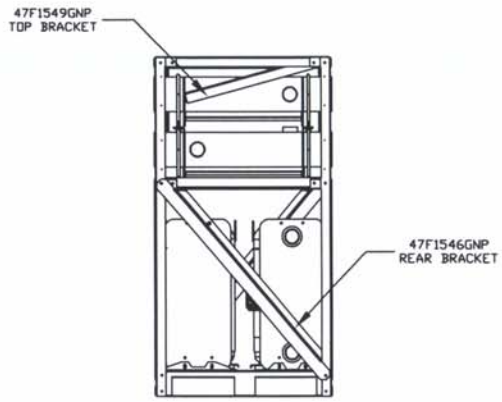

REAR VIEW

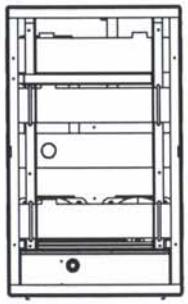

TOP VIEW

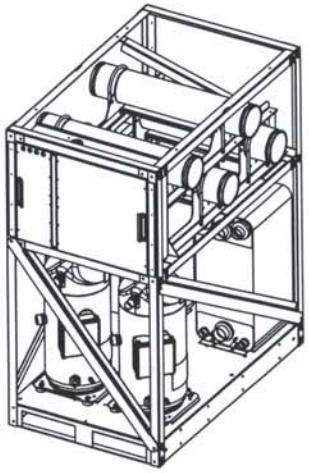

ISO VIEW

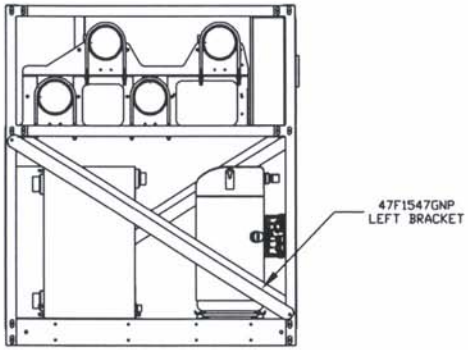

LEFT SIDE VIEW

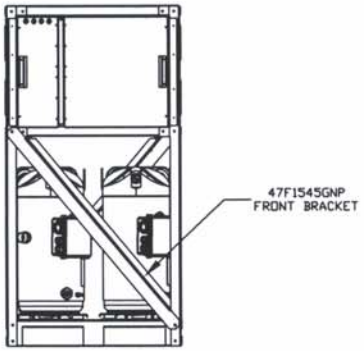

FRONT VIEW

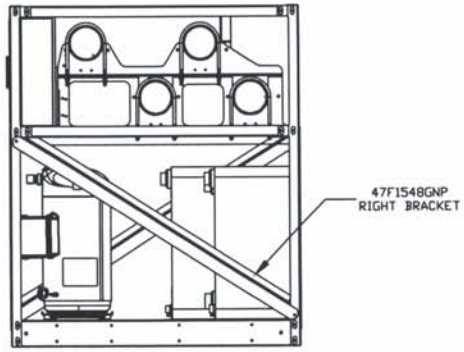

RIGHT SIDE VIEW

CLIMACOOL
THE ULTIMATE CHILLER SOLUTION

This document is the sole property of ClimaCool Corp. Distribution of this document is forbidden without the written consent of ClimaCool Corp. Design changes to any portion of this document may occur without notice.

CHILLER LAYOUT: UCW/H030, 050, 070			
CC P/N: 83K119N01			
PROJECT: UNIT SEISMIC BRACKET KIT UC*.			
SIZE B	FSCM NO.	DWG NO. CCE-83K0119N01 UNIT SEISMIC BRACKET KIT UC*	
SCALE None	DATE 3/05/2010	SHEET 1 OF 1	REV. Orig.

VIEW_REFERENCES

Attachment #2 Seismic Bracket Kit

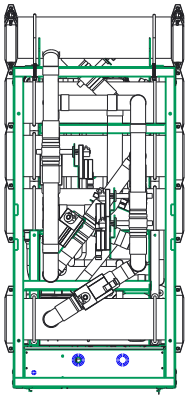

TOP

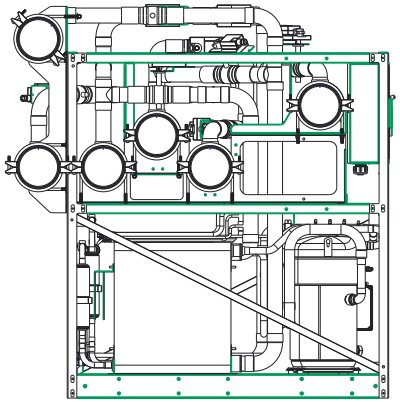

LEFT

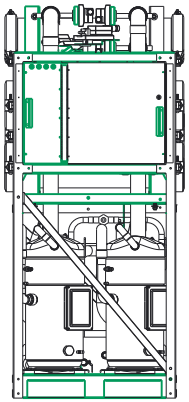

FRONT

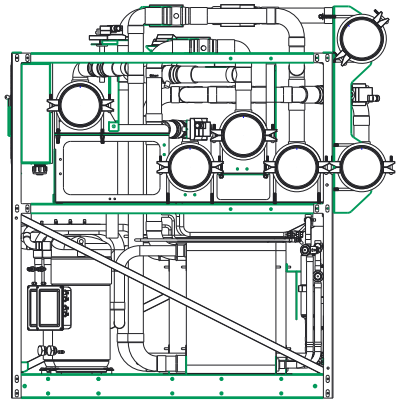

RIGHT

REV	DESCRIPTION	BY	PCN	DATE	ENG
-	INITIAL RELEASE	-	-	Nov-20-15	-

UNLESS OTHERWISE SPECIFIED
DIMENSIONS ARE IN INCHES.
TOLERANCES AS FOLLOWS:
DECIMALS - ±.031
ANGLES - ±1°

FINISH: N/A

MATERIAL: N/A

CLIMA COOL®
ULTIMATE CLIMATE SOLUTIONS
15 S. Virginia Avenue
Oklahoma City, Ok 73106
Ph: 405-815-3000
Fax: 405-815-3052

TITLE: 85 TON SHC HEAT RECOVERY CHILLER

Pro/E

DRAWING NO: VIEW_REFERENCES

SIZE A

DRAWN BY: T. SMOCK Nov-20-15

ENGINEER: T. SMOCK Nov-20-15

SCALE: 0.025

SHEET: 1 OF 1

REV A

BOT_LEFT_ANGLED_TUBE_TABS

Material Properties	
Grade	1005-1026
Shape	Square Tube
Wall Thickness	0.120" ± 0.012"
Straightness Tolerance	1/16" per 3'
Yield Strength	32,000 psi
Specification Met	ASTM A513
Construction	Hot Rolled
Material Composition	-
Carbon	0.13-0.20%
Manganese	0.30-0.90%
Silicon	0.15-0.30%
Phosphorous	0.04% Max
Sulfur	0.50% Max
Iron	98.06-99.42%
Nominal Density	0.283 lb/cu. in.
Thermal Coefficient of Expansion per °F	6.7-7.5e-6
Elongation Range	10-36%

Attachment #2 Seismic Bracket Kit

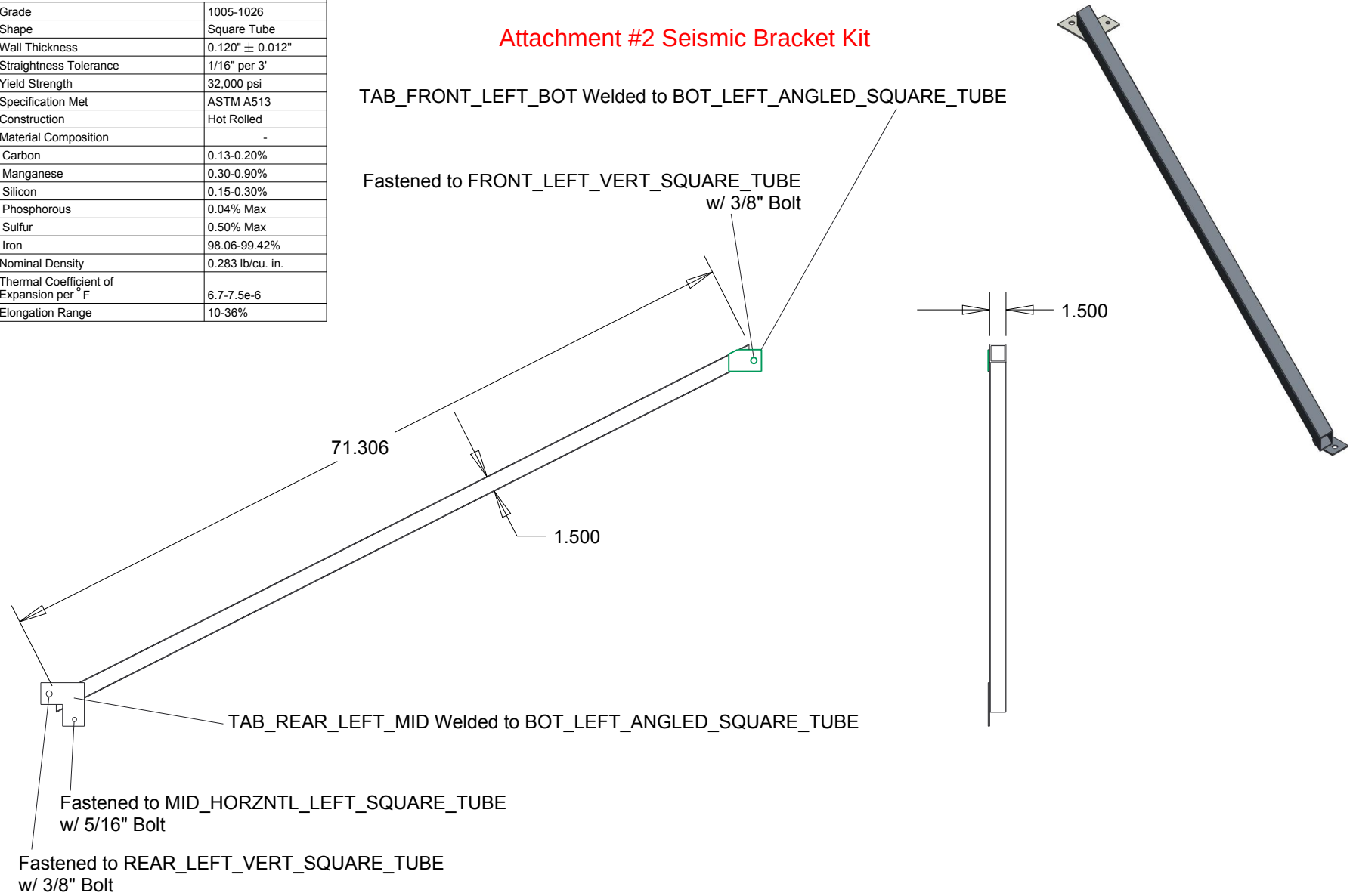

REV	DESCRIPTION	BY	PCN	DATE	ENG
-	INITIAL RELEASE	-	-	Nov-20-15	-

UNLESS OTHERWISE SPECIFIED
DIMENSIONS ARE IN INCHES.
TOLERANCES AS FOLLOWS:
DECIMALS - ±.031
ANGLES - ±1°

FINISH: ROUGH

MATERIAL:
LOW-CARBON STEEL

CLIMACOOL® ULTIMATE CLIMATE SOLUTIONS

15 S. Virginia Avenue
Oklahoma City, Ok 73106
Ph: 405-815-3000
Fax: 405-815-3052

TITLE: STEEL, SQUARE TUBE

Pro/E

DRAWING NO: BOT_LEFT_ANGLED_TUBE_TABS

SIZE A

DRAWN BY: T. SMOCK Nov-20-15

ENGINEER: T. SMOCK Nov-20-15

SCALE: 0.075

SHEET: 1 OF 1

REV A

BOT_RIGHT_ANGLED_TUBE_TABS

Material Properties	
Grade	1005-1026
Shape	Square Tube
Wall Thickness	0.120" ± 0.012"
Straightness Tolerance	1/16" per 3'
Yield Strength	32,000 psi
Specification Met	ASTM A513
Construction	Hot Rolled
Material Composition	-
Carbon	0.13-0.20%
Manganese	0.30-0.90%
Silicon	0.15-0.30%
Phosphorous	0.04% Max
Sulfur	0.50% Max
Iron	98.06-99.42%
Nominal Density	0.283 lb/cu. in.
Thermal Coefficient of Expansion per °F	6.7-7.5e-6
Elongation Range	10-36%

Attachment #2 Seismic Bracket Kit

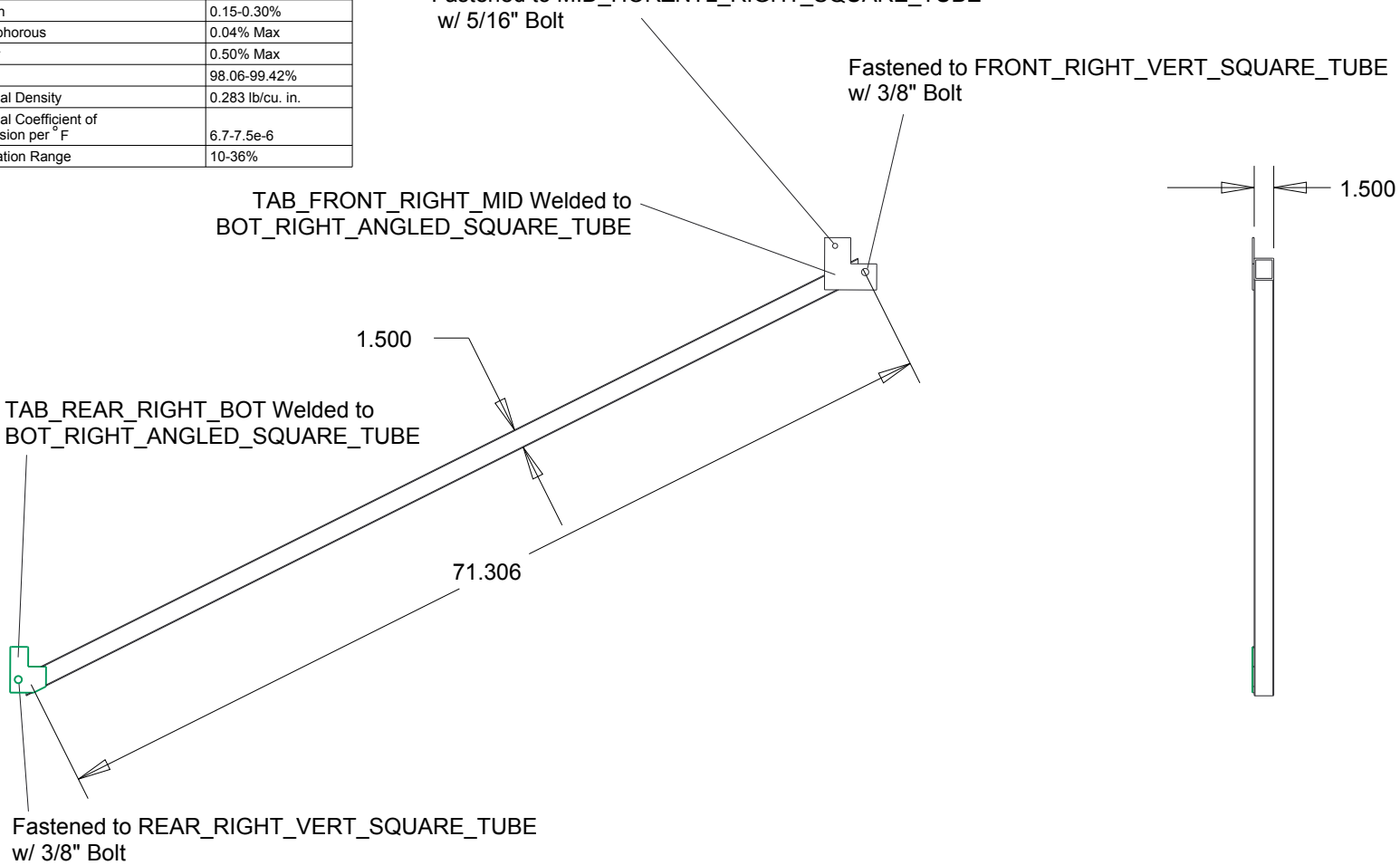

REV	DESCRIPTION	BY	PCN	DATE	ENG
-	INITIAL RELEASE	-	-	Nov-20-15	-

UNLESS OTHERWISE SPECIFIED
DIMENSIONS ARE IN INCHES.
TOLERANCES AS FOLLOWS:
DECIMALS - ±.031
ANGLES - ±1°

FINISH: ROUGH

MATERIAL:
LOW-CARBON STEEL

CLIMACOOL
ULTIMATE CLIMATE SOLUTIONS

15 S. Virginia Avenue
Oklahoma City, Ok 73106
Ph: 405-815-3000
Fax: 405-815-3052

TITLE: STEEL, SQUARE TUBE

Pro/E | DRAWING NO: BOT_RIGHT_ANGLED_TUBE_TABS

SIZE A | DRAWN BY: T. SMOCK Nov-20-15 | SCALE: 0.075 | REV A

ENGINEER: T. SMOCK Nov-20-15 | SHEET: 1 OF 1

FRONT_ANGLED_WELDED_TABS

Material Properties	
Grade	1005-1026
Shape	Square Tube
Wall Thickness	0.120" ± 0.012"
Straightness Tolerance	1/16" per 3'
Yield Strength	32,000 psi
Specification Met	ASTM A513
Construction	Hot Rolled
Material Composition	-
Carbon	0.13-0.20%
Manganese	0.30-0.90%
Silicon	0.15-0.30%
Phosphorous	0.04% Max
Sulfur	0.50% Max
Iron	98.06-99.42%
Nominal Density	0.283 lb/cu. in.
Thermal Coefficient of Expansion per °F	6.7-7.5e-6
Elongation Range	10-36%

Attachment #2 Seismic Bracket Kit

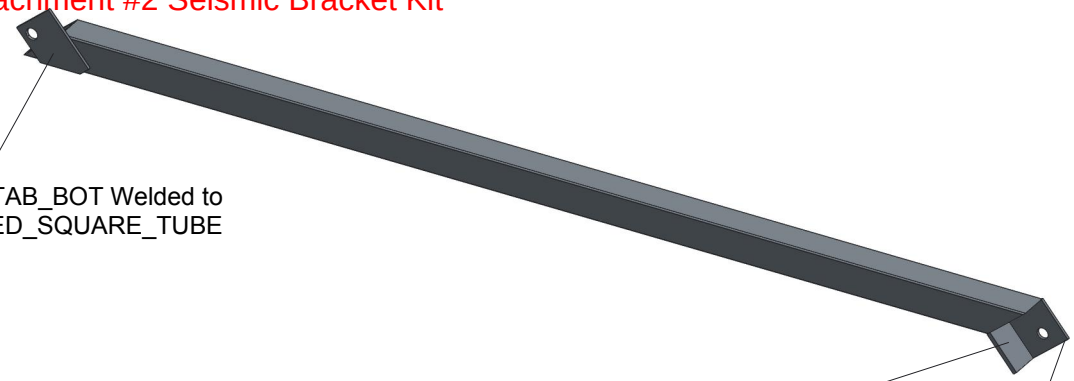

FRONT_ANGLED_TAB_BOT Welded to FRONT_ANGLED_SQUARE_TUBE

FRONT_ANGLED_TAB_TOP-2 Welded to FRONT_ANGLED_TAB_TOP-1 and FRONT_ANGLED_SQUARE_TUBE

FRONT_ANGLED_TAB_TOP-1 Welded to FRONT_ANGLED_SQUARE_TUBE and FRONT_ANGLED_TAB_TOP-2

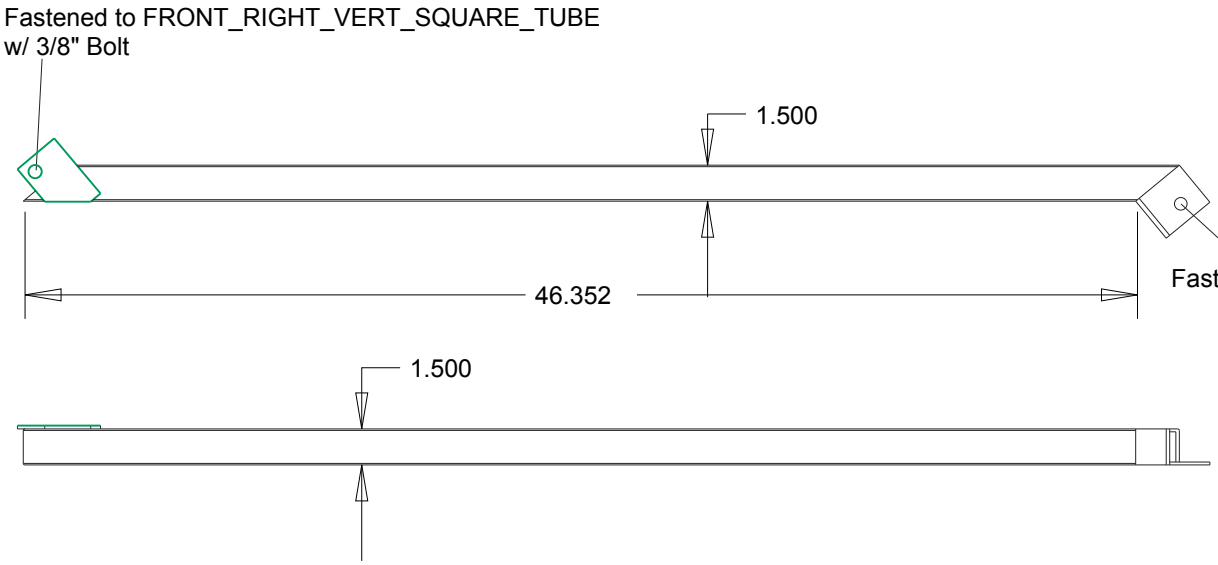

REV	DESCRIPTION	BY	PCN	DATE	ENG
-	INITIAL RELEASE	-	-	Nov-20-15	-

UNLESS OTHERWISE SPECIFIED DIMENSIONS ARE IN INCHES. TOLERANCES AS FOLLOWS: DECIMALS - ±.031 ANGLES - ±1°

FINISH: ROUGH

MATERIAL: LOW-CARBON STEEL

CLIMACOOL® ULTIMATE CLIMATE SOLUTIONS

15 S. Virginia Avenue
Oklahoma City, Ok 73106
Ph: 405-815-3000
Fax: 405-815-3052

TITLE: STEEL, SQUARE TUBE

Pro/E | DRAWING NO: FRONT_ANGLED_WELDED_TABS

SIZE A | DRAWN BY: T. SMOCK Nov-20-15 | SCALE: 0.125 | REV A

ENGINEER: T. SMOCK Nov-20-15 | SHEET: 1 OF 1

REAR_ANGLED_WELDED_TABS

Material Properties	
Grade	1005-1026
Shape	Square Tube
Wall Thickness	0.120" ± 0.012"
Straightness Tolerance	1/16" per 3'
Yield Strength	32,000 psi
Specification Met	ASTM A513
Construction	Hot Rolled
Material Composition	-
Carbon	0.13-0.20%
Manganese	0.30-0.90%
Silicon	0.15-0.30%
Phosphorous	0.04% Max
Sulfur	0.50% Max
Iron	98.06-99.42%
Nominal Density	0.283 lb/cu. in.
Thermal Coefficient of Expansion per °F	6.7-7.5e-6
Elongation Range	10-36%

Attachment #2 Seismic Bracket Kit

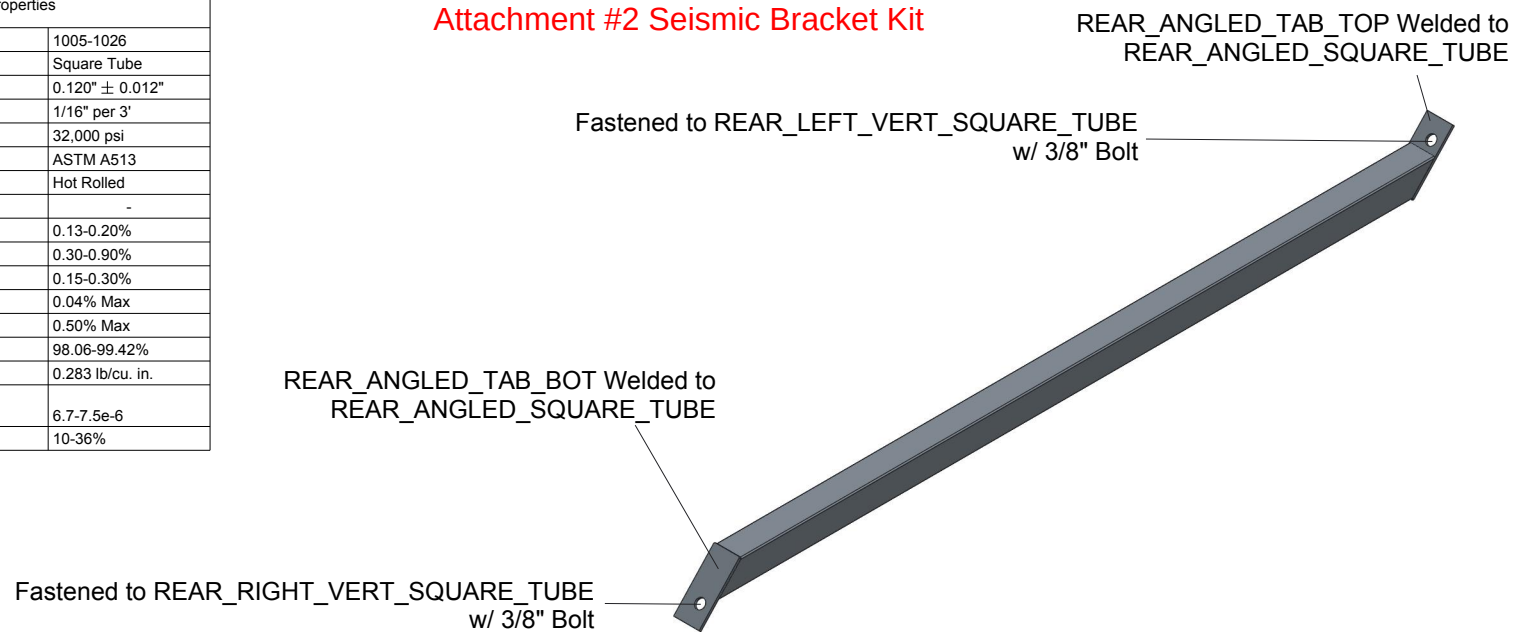

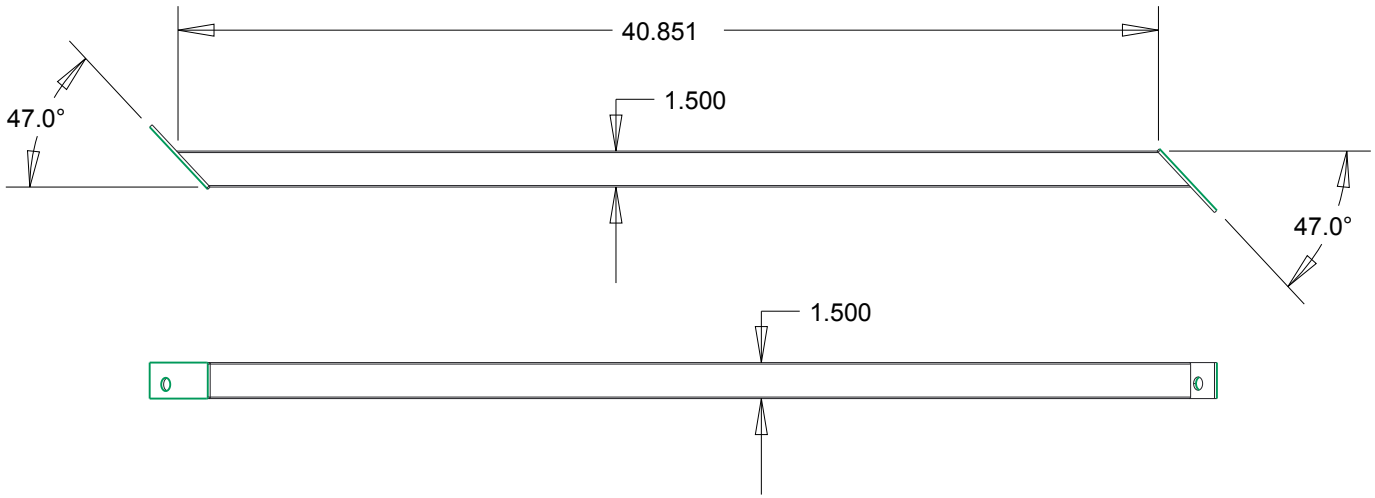

REV	DESCRIPTION	BY	PCN	DATE	ENG
-	INITIAL RELEASE	-	-	Nov-20-15	-

UNLESS OTHERWISE SPECIFIED DIMENSIONS ARE IN INCHES. TOLERANCES AS FOLLOWS: DECIMALS - ±.031 ANGLES - ±1°

FINISH: ROUGH

MATERIAL: LOW-CARBON STEEL

CLIMACOOL ULTIMATE CLIMATE SOLUTIONS

15 S. Virginia Avenue
Oklahoma City, Ok 73106
Ph: 405-815-3000
Fax: 405-815-3052

TITLE: STEEL, SQUARE TUBE

Pro/E | DRAWING NO: REAR_ANGLED_WELDED_TABS

SIZE A | DRAWN BY: T. SMOCK Nov-20-15 | SCALE: 0.125 | REV A

ENGINEER: T. SMOCK Nov-20-15 | SHEET: 1 OF 1

Hard Copies of this Drawing are for REFERENCE ONLY. For CURRENT INFO. refer to the DWG DATABASE.

UPPER_FRONT_ANGLED_BRACE

DESCRIPTION	QTY.	
RAW STEEL (10 GA.)	Net Qty.	
	3.994 Lbs.	
PAINT	Paint Qty.	Surf. Area
	0.041 Lbs.	1.495 in^2

NOTE:
MATERIAL TO BE G60 GALVANIZED STEEL
UNLESS OTHERWISE NOTED

Attachment #2 Seismic Bracket Kit

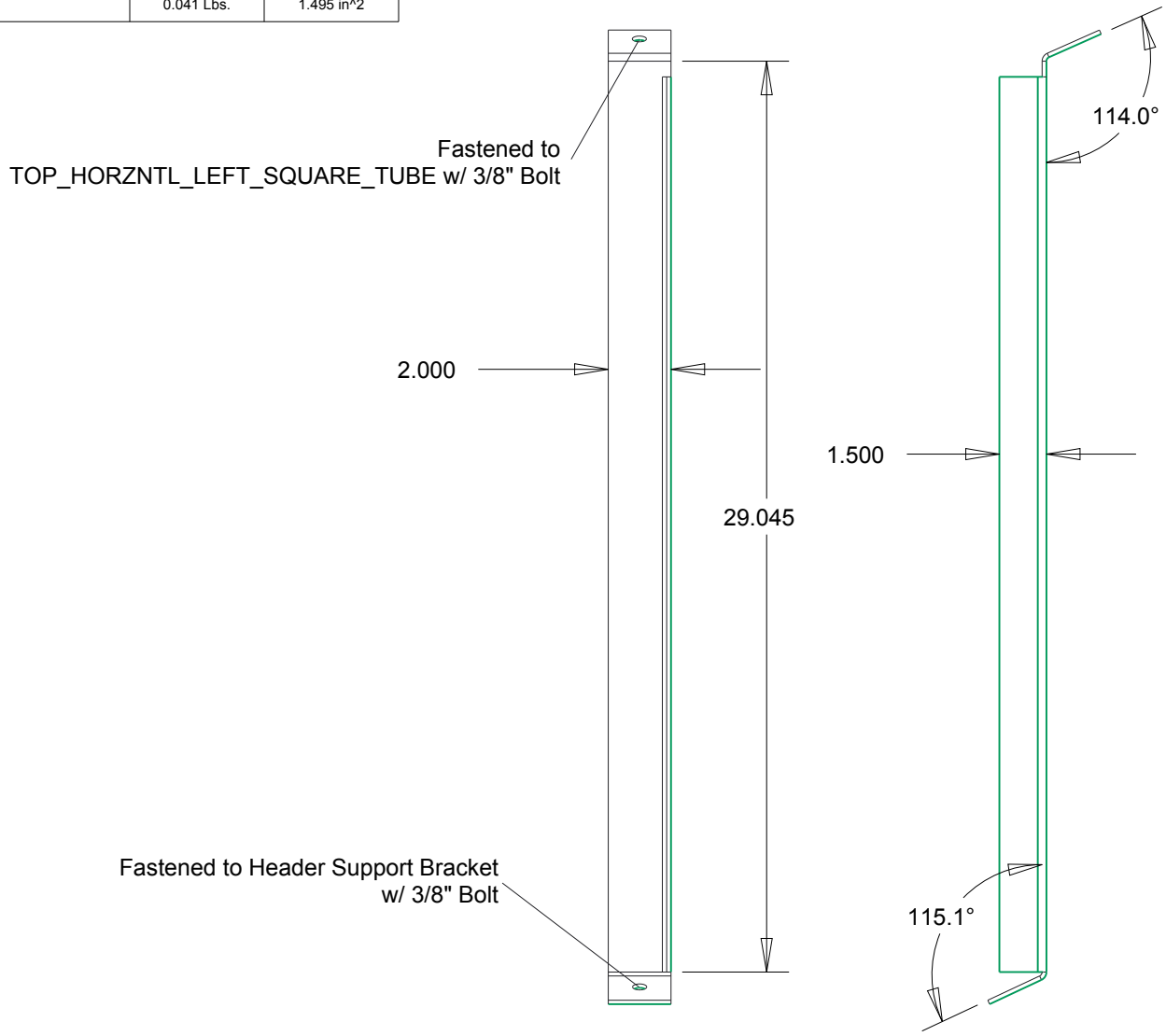

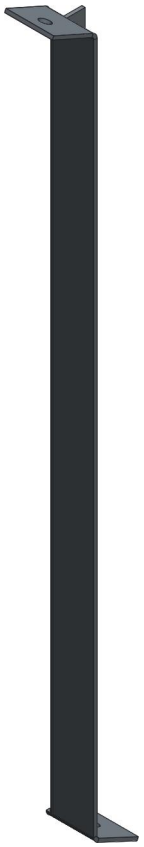

REV	DESCRIPTION	BY	PCN	DATE	ENG
-	INITIAL RELEASE	-	-	Nov-20-15	-

UNLESS OTHERWISE SPECIFIED
DIMENSIONS ARE IN INCHES.
TOLERANCES AS FOLLOWS:
DECIMALS - ±.031
ANGLES - ±1°

FINISH: SEE CHART

MATERIAL:
10 GA.

CLIMA COOL® ULTIMATE CLIMATE SOLUTIONS

15 S. Virginia Avenue
Oklahoma City, Ok 73106
Ph: 405-815-3000
Fax: 405-815-3052

TITLE: UPPER FRONT ANGLED BRACE

Pro/E | DRAWING NO: UPPER_FRONT_ANGLED_BRACE

SIZE A | DRAWN BY: T. SMOCK Nov-20-15 | SCALE: 0.175 | REV A

ENGINEER: T. SMOCK Nov-20-15 | SHEET: 1 OF 1

Hard Copies of this Drawing are for REFERENCE ONLY. For CURRENT INFO. refer to the DWG DATABASE.

Hard Copies of this Drawing are for REFERENCE ONLY. For CURRENT INFO. refer to the DWG DATABASE.

DESCRIPTION	QTY.	
RAW STEEL (10 GA.)	Net Qty.	
	3.994 Lbs.	
PAINT	Paint Qty.	Surf. Area
	0.041 Lbs.	1.495 in^2

NOTE:
MATERIAL TO BE G60 GALVANIZED STEEL
UNLESS OTHERWISE NOTED

Attachment #2 Seismic Bracket Kit

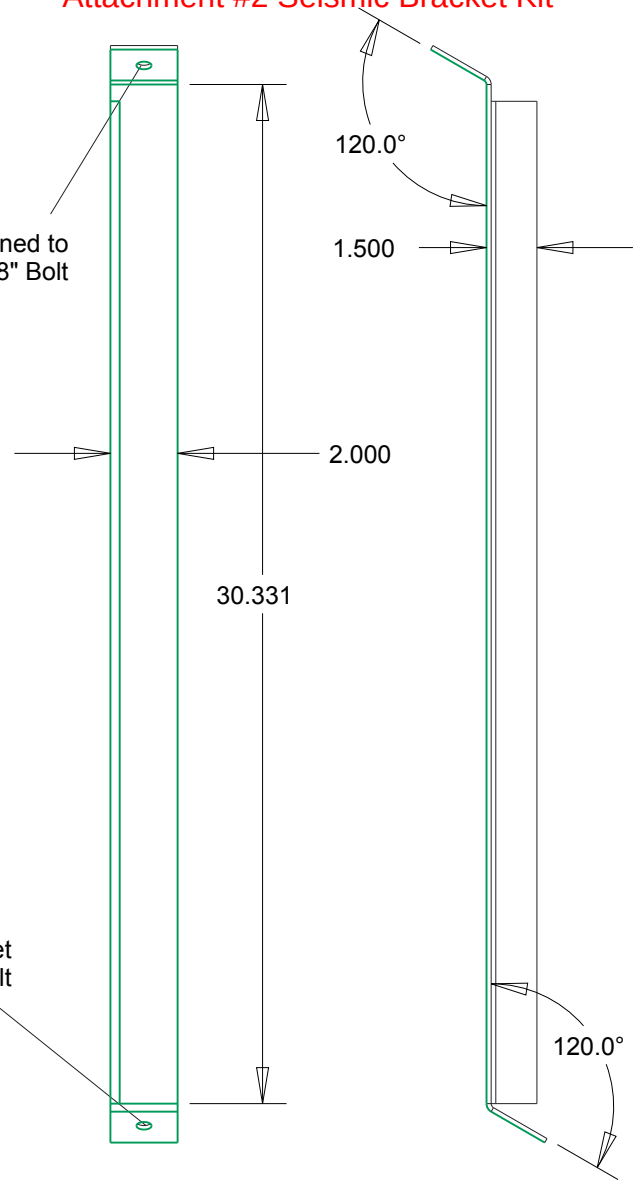

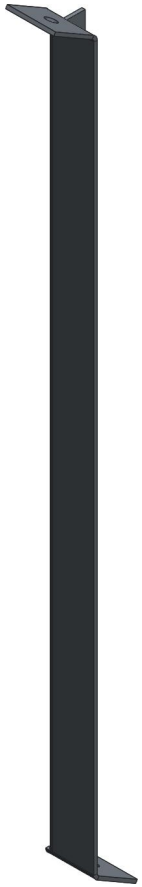

REV	DESCRIPTION	BY	PCN	DATE	ENG
-	INITIAL RELEASE	-	-	Nov-20-15	-

UNLESS OTHERWISE SPECIFIED
DIMENSIONS ARE IN INCHES.
TOLERANCES AS FOLLOWS:
DECIMALS - ±.031
ANGLES - ±1°

FINISH: SEE CHART

MATERIAL:
10 GA.

CLIMA COOL®
ULTIMATE CLIMATE SOLUTIONS

15 S. Virginia Avenue
Oklahoma City, Ok 73106
Ph: 405-815-3000
Fax: 405-815-3052

TITLE: UPPER FRONT ANGLED BRACE

Pro/E | DRAWING NO: UPPER_REAR_ANGLED_BRACE

SIZE A | DRAWN BY: T. SMOCK | Nov-20-15 | SCALE: 0.175 | REV A

ENGINEER: T. SMOCK | Nov-20-15 | SHEET: 1 OF 1

Hard Copies of this Drawing are for REFERENCE ONLY. For CURRENT INFO. refer to the DWG DATABASE.