Facilities Development Division www.oshpd.ca.gov/fdd
400 R Street. Suite 200, Sacramento, California 95811-6213 Phone (916) 440-8300 Fax (916) 654-2973

APPLICATION FOR PREAPPROVAL

SPECIAL SEISMIC CERTIFICATION OF EQUIPMENT AND COMPONENTS

For Office Use Only

APPLICATION NO.

OSP – 0200-10

Check whether application is: NEW [X] RENEWAL [ ]

1.0 **Cryoquip, Inc.**
Manufacturer

Raul Boza
Manufacturer's Technical Representative

25720 Jefferson Ave., Murrieta, CA 92562
Mailing Address

951.677.2062
Telephone

RBoza@cryoquip.com
E-mail Address

2.0 **Ambient Vaporizer**
Product Name

Cryogenic Fluid Vaporizer
Product Type

Ambient Vaporizers – See attachment
Product model No (List all unique product identification numbers and/or serial numbers)

General Description: Ambient air cryogenic fluid Vaporizer

3.0 **Tobolski Watkins Engineering, Inc.**
Applicant Company Name

Matthew Tobolski, Ph.D., P.E.
Contact Person

3710 Ruffin Road, San Diego, CA 92123
Mailing Address

858-381-5843
Telephone

mtobolski@tobolskiwatkins.com
E-mail Address

I hereby agree to reimburse the Office of Statewide Health Planning and Development for the actual costs incurred by the department for review.

Signature of Applicant

07/11/2011
Date

President and CEO
Title

Tobolski Watkins Engineering, Inc.
Company Name

4.0 ***Registered Design Professional Preparing the Report***

Tobolski Watkins Engineering Inc.
Company Name

Matthew J. Tobolski, Ph.D, P.E. — *Contact Name*
C 72806 — *California License Number*

3710 Ruffin Road, San Diego, CA 92123
Mailing Address

858-381-5843 — *Telephone*
mtobolski@tobolskiwatkins.com — *E-mail Address*

5.0 ***California Licensed Structural Engineer Review and Acceptance of the Report***

Tobolski Watkins Engineering Inc.
Company Name

Derrick A. Watkins, S.E. — *Contact Name*
S 5257 — *California License Number*

3710 Ruffin Road, San Diego, CA 92123
Mailing Address

858-381-5843 — *Telephone*
dwatkins@tobolskiwatkins.com — *E-mail Address*

6.0 ***Anchorage Pre-Approval***

☐ *Anchorage is pre-approved*
(Separate application for anchorage pre-approval is required)

☒ Anchorage is not Pre-approved

7.0 ***Certification Method***

☒ *Testing in accordance with:* ☒ *ICC-ES AC-156* ☐ *Other (Please Specify):*

☐ *Analysis*
☐ *Experience data*
☐ *Combination of Testing, Analysis, and/or Experience Data (Please Specify):*

8.0 ***Testing Laboratory (if applicable)***

Clark Testing — *Company Name*
Frank Medeiros — *Contact Name*

1801 Route 51, Jefferson Hills, PA 15025
Mailing Address

412.387.1003 — *Telephone*
fmedeiros@clarktesting.com — E-mail:

9.0 *Approval Parameters*

Design in accordance with ASCE 7-05 Chapter 13: ☒ Yes ☐ No

Design Basis of Equipment or Components (F_p/W_p) = ***1.5***

S_{DS} (Spectral response acceleration at short period) = ***2.5g***

a_p (In-structure equipment or component amplification factor) = ***2.5***

R_p (Equipment or component response modification factor) = ***2.5***

I_p (Importance factor) = ***1.5***

z/h (Height factor ratio)= ***0.0***

Equipment or Component fundamental period(s) = ***See Attachment***

Building period limits (if any) = ***None***

Overall dimensions and weight (or range thereof) = ***See Attachment***

Equipment or Components @ grade designed in accordance with ASCE 7-05 Chapter 15: ☐ Yes ☒ No

Design Basis of Equipment or Components (V/W) =

S_{DS} (Spectral response acceleration at short period) =

S_1 (Spectral response acceleration at 1 second period) =

R (Response modification coefficient)=1.0

Ω_0 (System overstrength factor) =1.0

C_d (Deflection amplification factor) =1.0

I_p (Importance factor) =1.5

Height to Center of Gravity above base =

Equipment or Component fundamental period(s) = Sec

Overall dimensions and weight (or range thereof) =

Tank(s) designed in accordance with ASME BPVC, 2007: ☐ Yes ☐ No

10.0 *List of attachments supporting the special seismic certification of equipment or components:*

☒ *Test Report* ☒ *Drawings* ☐ *Manufacturer's Catalog*

☐ *Calculations* ☐ *Others (Please Specify):*

11.0 *OSHPD Approval* *(For Office Use Only)*

7/20/2011	**December 31, 2016**
Signature & Date	*Approval Expiration Date*
M. R. Karim, SHFR	S_{DS} (g) = **2.50** z/h = **0.0**
Name & Title	*Special Seismic Certification Valid Up to*

Condition of Approval (if any):

TOBOLSKI WATKINS ENGINEERING

Table 1

Special Seismic Certification Certified Product Matrix

TWEI Project No.: 2011-0262-CO-001

Manufacturer: Cryoquip

Model Line: Ambient Vaporizer

Certified Product Construction Summary:
Units are all constructed of an aluminum base frame holding "spar" link plates which are arranged vertically and connect to vaporizer tubing via standard crimping detail. Tubing aluminum with stainless steel lining.

Certified Options Summary:
No options or subcomponents.
Manufacturer shall confirm operational weight increase for project specific loading is less than or equal to 10% of dry weight.

Certified Mounting Summary:
Base mounted at ground level only. SEOR to specify mounting detail or utilize OSHPD anchorage preapproval.

Building Code: CBC 2010 | ***Seismic Certification Limits:*** S_{DS} = 2.50g | z/h = 0.0 | I_p = 1.5

Model Line	Model	Dimension (in)			Weight (lb)	Notes	UUT
		Depth	Width	Height			
Ambient Vaporizer	VAI-1208-FBL15 (10A)	22.6	44.9	209.3	575	Weights shown for each unit are the dry weight (e.g. non-operating weight). Maximum allowable operational weight (iced operational) may be up to a 10% increase in dry weight shown.	1
	VAI-812-F-SP (2AH)	33.8	44.9	122.3	450		
	VAI-824-F-SP (3AH)	44.9	67.1	128.1	900		
	VAI-824-FL12-SP (5AH)	44.9	67.1	183.1	1,450		
	VAI-H48-FBL15-SP (20AH)	100.9	67.1	221.6	2,765		2

© 2010 Tobolski Watkins Engineering, Inc.

TOBOLSKI WATKINS ENGINEERING, INC. - 858-381-5843 - INFO@TOBOLSKIWATKINS.COM

TOBOLSKI WATKINS ENGINEERING

UUT - 1

UNIT UNDER TEST (UUT) Summary Sheet

TWEI Project No.: 2011-0262-CO-001

Manufacturer:	Cryoquip
Model Line:	Ambient Vaporizer
Model Number:	VAI-1208-FBL15 (10A)

Product Construction Summary:

Units are constructed of aluminum base frame holding extruded aluminum "spar" link plates arranged vertically. They connect to vaporizer tubing via standard crimping detail. Aluminum tubing with stainless steel lining.

Options/Subcomponent Summary:

No options or subcomponents.

Note: Unit tested with and without operational mass. Unit integrity was maintained through testing and verified functional.

UUT Properties - empty (w/ operation weight)

Weight (lb)	Dimensions (in)			Lowest Natural Frequency (Hz)		
	Depth	Width	Height	Front-Back	Side-Side	Vertical
575 (625)	226	44.9	209.3	4.9 (4.6)	5.5 (5.2)	None

UUT Highest Passed Seismic Run Information

Building Code	Test Criteria	S_{DS}	z/h	I_p	A_{FLX-H}	A_{RIG-H}	A_{FLX-V}	A_{RIG-V}
CBC 2010	ICC-ES AC 156	2.5g	0.0	1.5	2.5g	1.0g	1.67g	0.67g

Test Mounting Details:

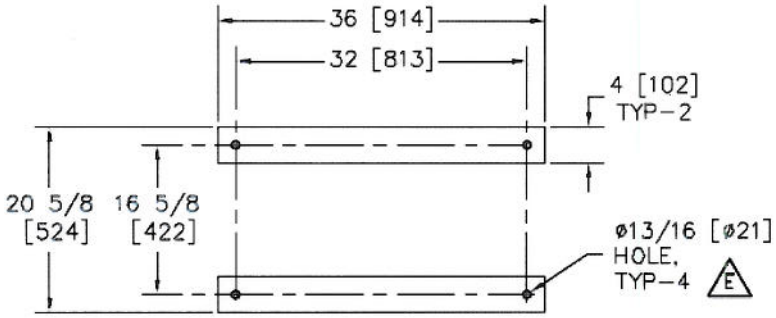

ANCHOR BOLT PATTERN

Unit mounted using four (4) ¾" Dia. – 316 stainless steel bolts using the above pictured arrangement.

© 2010 Tobolski Watkins Engineering, Inc.

TOBOLSKI WATKINS ENGINEERING, INC. - 858-381-5843 - INFO@TOBOLSKIWATKINS.COM

TOBOLSKI WATKINS ENGINEERING

UUT - 2

UNIT UNDER TEST (UUT)
Summary Sheet

TWEI Project No.: 2011-0262-CO-001

Manufacturer:	Cryoquip
Model Line:	Ambient Vaporizer
Model Number:	VAI-H48-FBL15-SP (20AH)

Product Construction Summary:
Units are constructed of aluminum base frame holding extruded aluminum "spar" link plates arranged vertically. They connect to vaporizer tubing via standard crimping detail. Aluminum tubing with stainless steel lining.

Options/Subcomponent Summary:
No options or subcomponents.

Note: Unit tested with and without operational mass. Unit integrity was maintained through testing and verified functional.

UUT Properties - empty (w/ operation weight)

Weight (lb)	Dimensions (in)			Lowest Natural Frequency (Hz)		
	Depth	Width	Height	Front-Back	Side-Side	Vertical
2,765 (2,945)	100.9	67.1	221.6	4.2 (3.9)	4.9 (4.7)	None

UUT Highest Passed Seismic Run Information

Building Code	Test Criteria	S_{DS}	z/h	I_p	A_{FLX-H}	A_{RIG-H}	A_{FLX-V}	A_{RIG-V}
CBC 2010	ICC-ES AC 156	2.5g	0.0	1.5	2.5g	1.0g	1.67g	0.67g

Test Mounting Details:

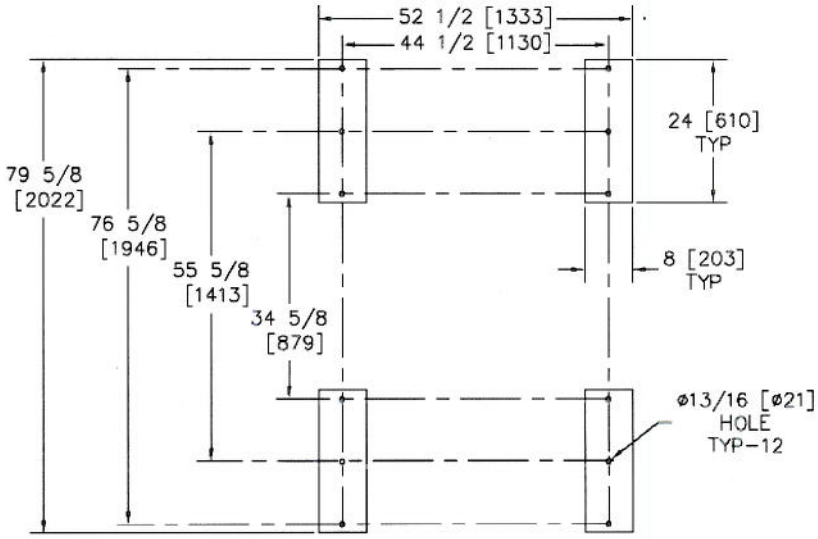

⚠ ANCHOR BOLT PATTERN

Unit mounted using four (12) ¾" Dia. – 316 stainless steel bolts using the above pictured arrangement.

© 2010 Tobolski Watkins Engineering, Inc.

TOBOLSKI WATKINS ENGINEERING, INC. - 858-381-5843 - INFO@TOBOLSKIWATKINS.COM