Facilities Development Division www.oshpd.ca.gov/fdd
400 R Street. Suite 200, Sacramento, California 95811-6213 Phone (916) 440-8300 Fax (916) 654-2973

APPLICATION FOR PREAPPROVAL

SPECIAL SEISMIC CERTIFICATION OF EQUIPMENT AND COMPONENTS

For Office Use Only

APPLICATION NO.

OSP – 0031-10

Check whether application is: NEW [ ] RENEWAL [X]

1.0

Edwards, A Div. of UTC Fire & Security America Corporation, Inc.
Manufacturer

Steve Tabb
Manufacturer's Technical Representative

8985 Town Center Parkway; Bradenton, FL 34202
Mailing Address

(941) 739-4328
Telephone

Steven.tabb@fs.utc.com
E-mail Address

2.0

EST3 Fire Protection System
Product Name

Fire Protection Equipment
Product Type

Please see attached listing
Product model No (List all unique product identification numbers and/or serial numbers)

General Description: Fire protection system equipment including control cabinets, central processing units, detectors, pull stations, I/O modules, power supplies, speakers, strobes and all associated hardware. See attached description.

3.0

Edwards, A Div. of UTC Fire & Security America Corporation, Inc.
Applicant Company Name

Jeff Van Keuren
Contact Person

8985 Town Center Parkway; Bradenton, FL 34202
Mailing Address

(941) 739-4328
Telephone

Jeffery.VanKeuren@fs.utc.com
E-mail Address

I hereby agree to reimburse the Office of Statewide Health Planning and Development for the actual costs incurred by the department for review.

Signature of Applicant
Signature of Applicant

12/05/2011
Date

Compliance Leader, GDA
Title

Edwards, A Div. of UTC Fire & Security America Corporation, Inc.
Company Name

4.0 ***Registered Design Professional Preparing the Report***

ANCO Engineering, Inc.	
Company Name	
John C. Stoessel	37259
Contact Name	*California License Number*
1965-A 33rd St.; Boulder, CO 80301	
Mailing Address	
(816) 591-9001	*john@ancoengineering.com*
Telephone	*E-mail Address*

5.0 ***California Licensed Structural Engineer Review and Acceptance of the Report***

Tobolski Watkins Engineering Inc.	
Company Name	
Derrick Watkins	S5257
Contact Name	*California License Number*
3710 Ruffin Road; San Diego, CA 92123	
Mailing Address	
(858) 381-5843	dwatkins@tobolskiwatkins.com
Telephone	*E-mail Address*

6.0 ***Anchorage Pre-Approval***

☐ *Anchorage is pre-approved*

(Separate application for anchorage pre-approval is required)

☒ Anchorage is not Pre-approved

70. ***Certification Method***

☒ *Testing in accordance with:* ☒ *ICC-ES AC-156* ☐ *Other (Please Specify):*

☐ *Analysis*

☐ *Experience data*

☐ *Combination of Testing, Analysis, and/or Experience Data (Please Specify):*

8.0 ***Testing Laboratory (if applicable)***

ANCO Engineering, Inc.	*Conor Byrne*
Company Name	*Contact Name*
1965-A 33rd St.; Boulder, CO 80301	
Mailing Address	
(303) 443-7580 x 223	*conor@ancoengineering.com*
Telephone	E-mail:

9.0 ***Approval Parameters***

Design in accordance with ASCE 7-05 Chapter 13: ☒ Yes ☐ No

Design Basis of Equipment or Components (F_p/W_p) = 2.4

S_{DS} (Spectral response acceleration at short period) =2.0g

a_p (In-structure equipment or component amplification factor) =1.0

R_p (Equipment or component response modification factor) =1.5

I_p (Importance factor) = 1.5

z/h (Height factor ratio)=1.0

Equipment or Component fundamental period(s) =See attachments

Building period limits (if any) =None

Overall dimensions and weight (or range thereof) =See Attachments

Equipment or Components @ grade designed in accordance with ASCE 7-05 Chapter 15: ☐ Yes ☒ No

Design Basis of Equipment or Components (V/W) =

S_{DS} (Spectral response acceleration at short period) =

S_1 (Spectral response acceleration at 1 second period) =

R (Response modification coefficient)=1.0

Ω_0 (System overstrength factor) =1.0

C_d (Deflection amplification factor) =1.0

I_p (Importance factor) =1.5

Height to Center of Gravity above base =

Equipment or Component fundamental period(s) = Sec

Overall dimensions and weight (or range thereof) =

Tank(s) designed in accordance with ASME BPVC, 2007: ☐ Yes ☒ No

10.0 ***List of attachments supporting the special seismic certification of equipment or components:***

☒ *Test Report* ☐ *Drawings* ☐ *Manufacturer's Catalog*

☐ *Calculations* ☐ *Others (Please Specify):*

11.0 ***OSHPD Approval*** *(For Office Use Only)*

12/29/2011	**December 31, 2016**
Signature & Date	*Approval Expiration Date*
M. R. Karim, SHFR	S_{DS} (g) = **2.0** z/h = **1.0**
Name & Title	*Special Seismic Certification Valid Up to*

Condition of Approval (if any):

9.0 ***Approval Parameters***

Design in accordance with ASCE 7-05 Chapter 13: ☒ Yes ☐ No

Design Basis of Equipment or Components (F_p/W_p) = 2.4

S_{DS} (Spectral response acceleration at short period) =2.0g

a_p (In-structure equipment or component amplification factor) =1.0

R_p (Equipment or component response modification factor) =1.5

I_p (Importance factor) = 1.5

z/h (Height factor ratio)=1.0

Equipment or Component fundamental period(s) =See attachments

Building period limits (if any) =None

Overall dimensions and weight (or range thereof) =See Attachments

Equipment or Components @ grade designed in accordance with ASCE 7-05 Chapter 15: ☐ Yes ☒ No

Design Basis of Equipment or Components (V/W) =

S_{DS} (Spectral response acceleration at short period) =

S_1 (Spectral response acceleration at 1 second period) =

R (Response modification coefficient)=1.0

Ω_0 (System overstrength factor) =1.0

C_d (Deflection amplification factor) =1.0

I_p (Importance factor) =1.5

Height to Center of Gravity above base =

Equipment or Component fundamental period(s) = Sec

Overall dimensions and weight (or range thereof) =

Tank(s) designed in accordance with ASME BPVC, 2007: ☐ Yes ☒ No

10.0 ***List of attachments supporting the special seismic certification of equipment or components:***

☒ *Test Report* ☐ *Drawings* ☐ *Manufacturer's Catalog*

☐ *Calculations* ☐ *Others (Please Specify):*

11.0 ***OSHPD Approval*** *(For Office Use Only)*

12/29/2011	**December 31, 2016**
Signature & Date	*Approval Expiration Date*
M. R. Karim, SHFR	S_{DS} (g) = **2.0** z/h = **1.0**
Name & Title	*Special Seismic Certification Valid Up to*

Condition of Approval (if any): **Approval is limited to tested support conditions and configurations only.**

ANCO Engineers, Inc.
1965A 33rd Street
Boulder, CO 80301
(303)443-7580

UUT # 1

Unit Under Test (UUT) Summary Sheet

ANCO Project Number: 3295.02

Manufacturer:	UTC Fire and Safety (Manufactured in Pittsfield, ME)
Model Line:	EST-3 Fire Alarm Control and Annunciators
Model Number:	10ANN/B-S
Product Construction Summary:	The 10ANN/B-S module includes a 3-ANNCPU3 CPU which is integral to the cabinet. Nominally, it has 10 free modular slots. As tested it had 8 modules installed, two of which were double wide.
Options/ Subcomponent Summary:	The modules tested were as follows: 3-LCD 3-ANNBF: blank filler plate 3-REMICA: remote mic unit (double wide) 3-12/S1GY: LED strip w/ 3-ANNSM 3-12/S1RY: LED strip w/ 3-ANNSM 3-12/S2Y: LED strip w/ 3-ANNSM 3-6/3S1G2Y: LED strip w/ 3-ANNSM 3-6/3S1GYR: LED strip w/ 3-ANNSM

UUT Properties

Weight (lb)	Dimensions (in)			Lowest Natural Frequency (Hz)		
	Depth	Width	Height	Front-Back	Side-Side	Vertical
22.5	3.5	25.5	13.25	N/A	N/A	N/A

UUT Highest Passed Seismic Run Information

Building Code	Test Criteria	S_{DS}	z/h	I_P	A_{FLX-H}	A_{RIG-H}	A_{FLX-V}	A_{RIG-V}
CBC 2010	ICC-ES AC-156	2.0g	1	1.5	3.2 g	2.4 g	2.13 g	1.6 g

Test Mounting Details:

Two ungraded 3/16”-3 inch long toggle bolts were used in the top two mounting holes to attach the 3-10ANN/B-S to the 5/8 inch thick type-x fire rated drywall. Installation of screws was done in accordance with good workmanship as required for this application. Unit attachments to the 3-10ANN/B-S are per UTC specifications.

UTC installation instructions require a full 4 bolt anchorage. Hence this tested anchorage is less than the least allowable seismic capacity anchorage.

ANCO Engineers, Inc.
1965A 33rd Street
Boulder, CO 80301
(303)443-7580

UUT # 1

Unit Under Test (UUT) Summary Sheet

ANCO Project Number: 3315.01

Test Setup:	Test Setup #4	
UUT Function:	Surface Mount Announcer Wall box – 10 position with functional components noted in UUT item 7	
Restrictions:	Wall mount only. "K"-panel, power cables, and ribbon cables must be zip tied into place.	
Functionality Test Results:	Pre-Test	Post-Test
	Pass	Pass
Component Serial Numbers:	ANCO 4-10	

UUT Properties

Weight (lb)	**CG Location (in)**			**Coordinate System Origin**
	Depth	**Width**	**Height**	Bottom Back Left corner (see drawing Below)
22.5	1.75	12	6.5	

Additional Notes/Comments:

The anchorage pattern is a rectangular 6 bolt pattern 20" wide by 8.5" high.

Coordinate Origin (Noted by Arrows):

Annunciator Box
Cat#: 3-ANN-B-S SN#: Anco4-10

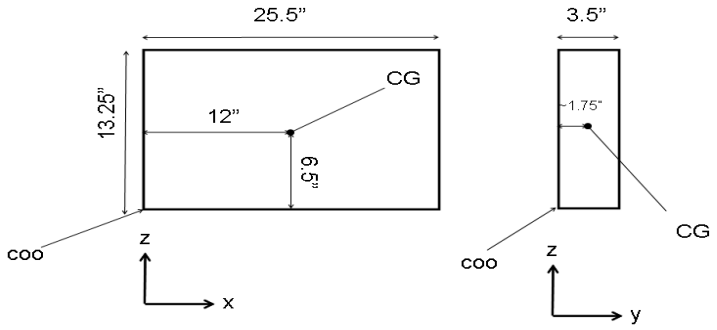

ANCO Engineers, Inc.
1965A 33rd Street
Boulder, CO 80301
(303)443-7580

UUT # 2

Unit Under Test (UUT) Summary Sheet

ANCO Project Number: 3295.02

Manufacturer:	UTC Fire and Safety (Manufactured in Pittsfield, ME)
Model Line:	EST-3 Fire Alarm Control and Annunciators
Model Number:	3-CAB14B, 3-CAB14D
Product Construction Summary:	Assembled with 3-CAB14B (Back Box) and 3-CAB14D (Door). The 3-CAB14 has two local rail modules; each of which has seven open slots. Any or all slots can be filled. As tested all slots were occupied with the heaviest modules in order maximize weight and overturning moments.

Options/ Subcomponent Summary:

3-CAB14B	Back Box /w 14 LRM Space w/o Door
3-CAB14D	Door Assembly for 3-CAB14
3-CHAS7	Chassis Ass'y for 7 LRMs
3-CPU3	Central Processor Module
3-SDDC1	Signature Dual Driver Controller (LRM)
3-SDC1	Signature Data Card for Controller
3-SAC	Security/Access Control Module, Class B
3-ZA40A	40 Watt Zoned Amplifier, Class A, 25 or 70Vrms
3-RS485A	Network Communication Card, Class A
3-RS232	RS232 Communication Card
3-ASU/FT	Audio Source Unit w/ Firefighter Telephone
3-LCD	Liquid Crystal Display Module
3-PPS/M-120	Primary Power Supply 120V
3-BBC/M-120	Booster Power Supply 120V, Multiple Batteries
3-12/S1GY	LED Display/Control Module - 12 Sw, 1 GRN, 1 YLW LED
3-12/S1RY	LED Display/Control Module - 12 Sw, 1 RED, 1 YLW LED
3-12/S2Y	LED Display/Control Module - 12 Sw with 2 YLW LED
3-6/3S1G2Y	18 Sw/6 Grps of 3 Sw 1 LED each (GREEN AND YELLOW)
3-6/3S1GYR	18Sw/ 6 Grps of 3 Sw 1 LED each (GREEN, YELLOW AND RED)
12V18A	18Ah Sealed Lead Acid Battery

UUT Properties

Weight (lb)	Dimensions (in)			Lowest Natural Frequency (Hz)		
	Depth	Width	Height	Front-Back	Side-Side	Vertical
130	5.75	26.5	37.5	N/A	N/A	N/A

UUT Highest Passed Seismic Run Information

Building Code	Test Criteria	S_{DS}	z/h	I_P	A_{FLX-H}	A_{RIG-H}	A_{FLX-V}	A_{RIG-V}
CBC 2010	ICC-ES AC-156	2.0g	1	1.5	3.2 g	2.4 g	2.13 g	1.6 g

Test Mounting Details:

Six ungraded 3/16-3 inch long toggle bolts were used to attach the strut to the 5/8 inch thick type x-fire rated drywall and studs. Two pieces of strut were positioned horizontally along the top and bottom mounting patterns pre-drilled in the cabinet. The cabinet was attached with four anchors (2 per strut) of ungraded ¼-20TPI 1-inch long bolts into spring nuts located in the channels of the struts. Installation of screws was done in accordance with good workmanship as required for this application. UTC installation instructions will require this or superior anchorage. Hence this tested anchorage is the least allowable seismic capacity anchorage.

ANCO Engineers, Inc.
1965A 33rd Street
Boulder, CO 80301
(303)443-7580

UUT # 2

Unit Under Test (UUT) Summary Sheet

ANCO Project Number: 3315.01

Test Setup:	Test Setup #3	
UUT Function:	Fire alarm control cabinet Back Box with Door with internal functional components	
Restrictions:	Wall mount only. “K”-panel, power cables, and ribbon cables must be zip tied into place.	
Functionality Test Results:	Pre-Test	Post-Test
	Pass	Pass
Component Serial Numbers:	ANCO 3-11	

UUT Properties

Weight (lb)	**CG Location (in)**			**Coordinate System Origin**
	Depth	**Width**	**Height**	Bottom Back Left corner (see drawing Below)
130	2.5	13.5	16.5	

Additional Notes/Comments:

The anchorage pattern is a rectangular 6 bolt pattern two holes wide by 3 holes high and it is 21” wide by 30” high with another set of holes at 15” high and the same width.

Only the top two and bottom two anchor holes were used in mounting this cabinet for testing. This is the only acceptable four bolt mounting configuration.

Coordinate Origin (Noted by Arrows):

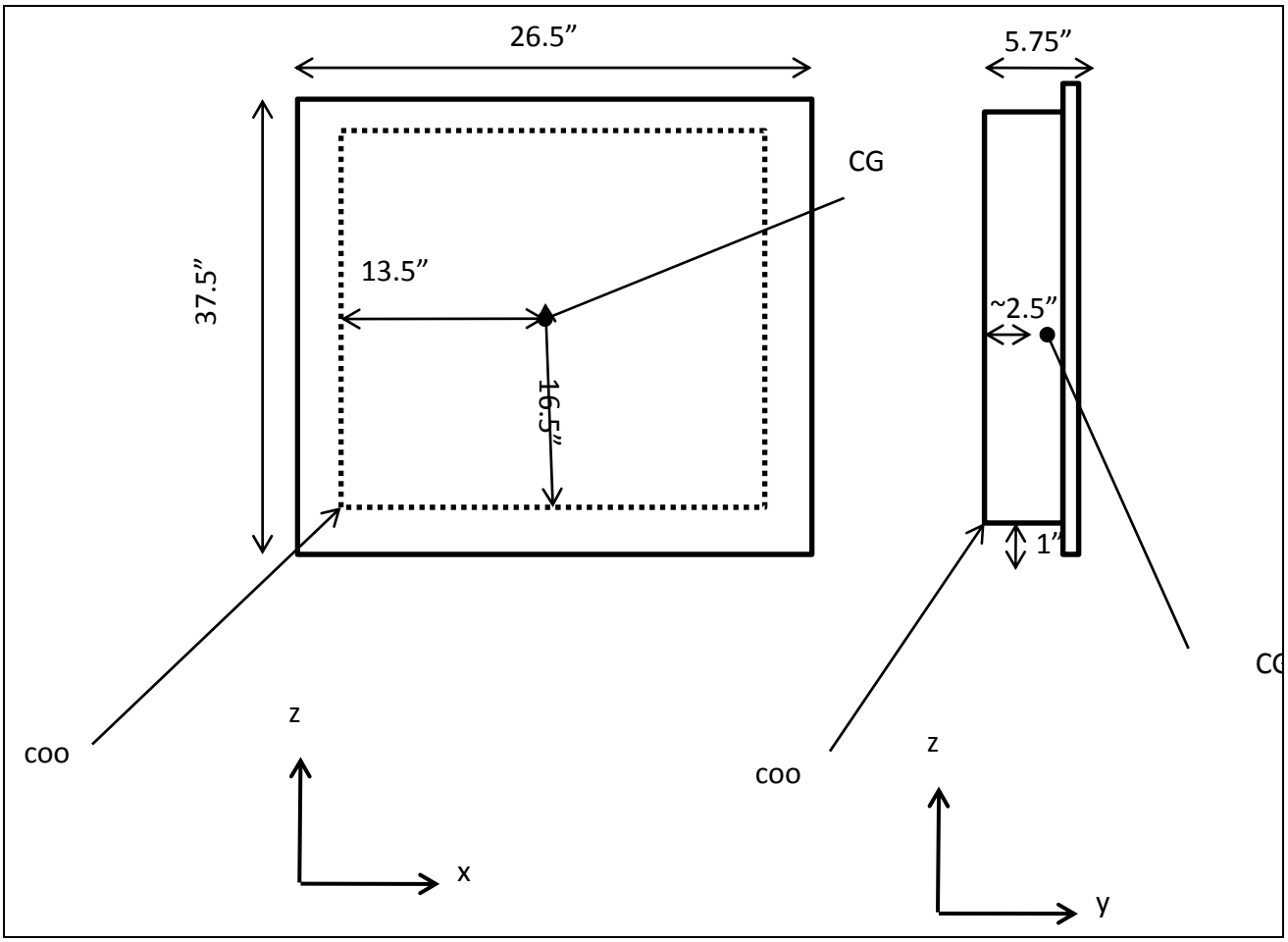
26.5”
5.75”
CG
37.5”
13.5”
16.5”
~2.5”
1”
coo
z
x
coo
z
y
co

ANCO Engineers, Inc.
1965A 33rd Street
Boulder, CO 80301
(303)443-7580

UUT # 3

Unit Under Test (UUT) Summary Sheet

ANCO Project Number: 3295.02

Manufacturer:	UTC Fire and Safety (Manufactured in Pittsfield, ME)
Model Line:	EST-3 Fire Alarm Control and Annunciators
Model Number:	3-CAB21B and 3-CAB21D
Product Construction Summary:	Cabinet Assembly contains a Back Box, door, batteries and electronic subcomponents.
Options/ Subcomponent Summary:	One 3-CHAS7, One 3-CHAS4, One 3-CPU3, One 3-SDDC1, Two 3-DC1, One 3-IDC 8/4, One 3-MODCOMP, One 3-OPS, One 3-LDSM, One 3-LRMF, One 3-ZA95, One 3-RS232, One 3-FIBMB, Two MMXVR, One 3-ASU/FT, One MN-NETSW1, One MN-FVPN, One MN-ABPM, One MN-PASM, One MN-BRKT1, One MN-COM1S, One 3-LCDXL1, One 3-PPS/M-120, One 3-12/S2Y, One 3-12RY, One 3-6/3S1GYR, One 3-12SY, One 3-24G, One 3-24R, One 3-24Y, Two 12V18A

UUT Properties

Weight (lb)	Dimensions (in)			Lowest Natural Frequency (Hz)		
	Depth	**Width**	**Height**	**Front-Back**	**Side-Side**	**Vertical**
156.5	5.75	26.5	48	N/A	N/A	N/A

UUT Highest Passed Seismic Run Information

Building Code	Test Criteria	S_{DS}	z/h	I_P	A_{FLX-H}	A_{RIG-H}	A_{FLX-V}	A_{RIG-V}
CBC 2010	ICC-ES AC-156	2.0g	1	1.5	3.2 g	2.4 g	2.13 g	1.6 g

Test Mounting Details:

Nine ungraded 3/16-3 inch long toggle bolts were used to attach the strut to the 5/8 inch thick type x-fire rated drywall and studs. Three pieces of strut were positioned horizontally along mounting pattern pre-drill of the cabinet. The cabinet was attached with six anchors (2 per strut) of ungraded ¼-20TPI 1-inch long bolts into spring nuts located in the channels of the struts. Installation of screws was done in accordance with good workmanship as required for this application.

UTC installation instructions will require this or superior anchorage. Hence this tested anchorage is the least allowable seismic capacity anchorage.

ANCO Engineers, Inc.
1965A 33rd Street
Boulder, CO 80301
(303)443-7580

UUT # 3

Unit Under Test (UUT) Summary Sheet

ANCO Project Number: 3315.01

Test Setup:	Test Setup #2	
UUT Function:	Fire alarm control cabinet with Back Box, door, and 3 Local rail modules for assorted electronic components.	
Restrictions:	Wall mount only. “K”-panel, power cables, and ribbon cables must be zip ties into place.	
Functionality Test Results:	Pre-Test	Post-Test
	Pass	Pass
Component Serial Numbers:	ANCO 2-3	

UUT Properties

Weight (lb)	**CG Location (in)**			**Coordinate System Origin**
	Depth	**Width**	**Height**	Bottom Back Left corner (see drawing Below)
156.5	2.0	12.5	22.5	

Additional Notes/Comments:

The anchorage pattern is a rectangular 6 bolt pattern 2 bolts wide and three bolts high. In total it was 21” wide by 42.25” high with another set of holes at 21.125” high and the same width. All 6 anchor holes were used in mounting this cabinet for testing.

Coordinate Origin (Noted by Arrows):

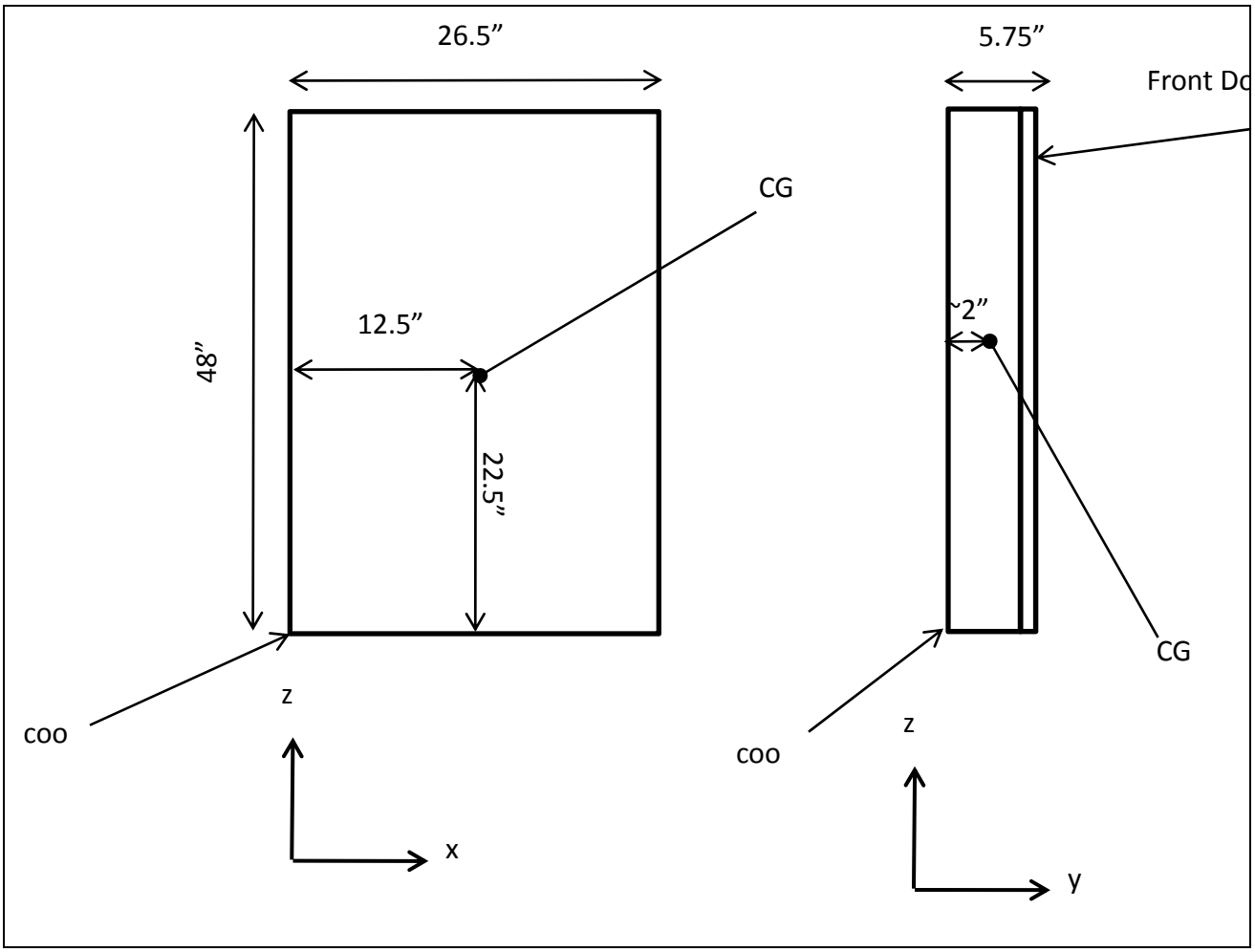
26.5”
5.75”
Front Do
CG
12.5”
48”
22.5”
~2”
CG
coo
z
x
coo
z
y

ANCO Engineers, Inc.
1965A 33rd Street
Boulder, CO 80301
(303)443-7580

UUT # 4

Unit Under Test (UUT) Summary Sheet

ANCO Project Number: 3295.02

Manufacturer:	UTC Fire and Safety (Manufactured in Pittsfield, ME)
Model Line:	EST-3 Fire Alarm Control and Annunciators
Model Number:	3-RCC14
Product Construction Summary:	Cabinet Assembly contains batteries and battery brackets.
Options/ Subcomponent Summary:	One 3-BTSEN One 3-BATS Two 12V-65Ah Batteries

UUT Properties

Weight (lb)	Dimensions (in)			Lowest Natural Frequency (Hz)		
	Depth	Width	Height	Front-Back	Side-Side	Vertical
160	6	25.5	36	N/A	N/A	N/A

UUT Highest Passed Seismic Run Information

Building Code	Test Criteria	S_{DS}	z/h	I_P	A_{FLX-H}	A_{RIG-H}	A_{FLX-V}	A_{RIG-V}
CBC 2010	ICC-ES AC-156	2.0g	1	1.5	3.2 g	2.4 g	2.13 g	1.6 g

Test Mounting Details:

Six ungraded 3/16-3 inch long toggle bolts were used to attach the strut to the 5/8 inch thick type x-fire rated drywall and studs. Two pieces of strut were positioned horizontally along the top and bottom mounting patterns pre-drilled in the cabinet. The cabinet was attached with four anchors (2 per strut) of ungraded ¼-20TPI 1-inch long bolts into spring nuts located in the channels of the struts. Installation of screws was done in accordance with good workmanship as required for this application.

UTC installation instructions will require this or superior anchorage. Hence this tested anchorage is the least allowable seismic capacity anchorage.

ANCO Engineers, Inc.
1965A 33rd Street
Boulder, CO 80301
(303)443-7580

UUT # 4

Unit Under Test (UUT) Summary Sheet

ANCO Project Number: 3295.02

Test Setup:	Test Setup #5	
UUT Function:	Fire alarm control cabinet with Back Box, door, and can contain either 2 Local rail modules for assorted electronic components or two large batteries with mounting brackets	
Restrictions:	Wall mount only. If configured with Local Rail Modules, "K"-panel, power cables, and ribbon cables must be zip ties into place.	
Functionality Test Results:	Pre-Test	Post-Test
	Pass	Pass
Component Serial Numbers:	ANCO 5-8	

UUT Properties

Weight (lb)	**CG Location (in)**			**Coordinate System Origin**
	Depth	**Width**	**Height**	Bottom Back Left corner (see drawing Below)
160	3	12.75	12	

Additional Notes/Comments:

The anchorage pattern is a rectangular 6 bolt pattern 2 holes wide by three holes high. It is 21" wide by 30" high with another set of holes at 15" high and the same width.

Only the top set and bottom set of anchor holes were used in mounting this cabinet for testing.

Coordinate Origin (Noted by Arrows):

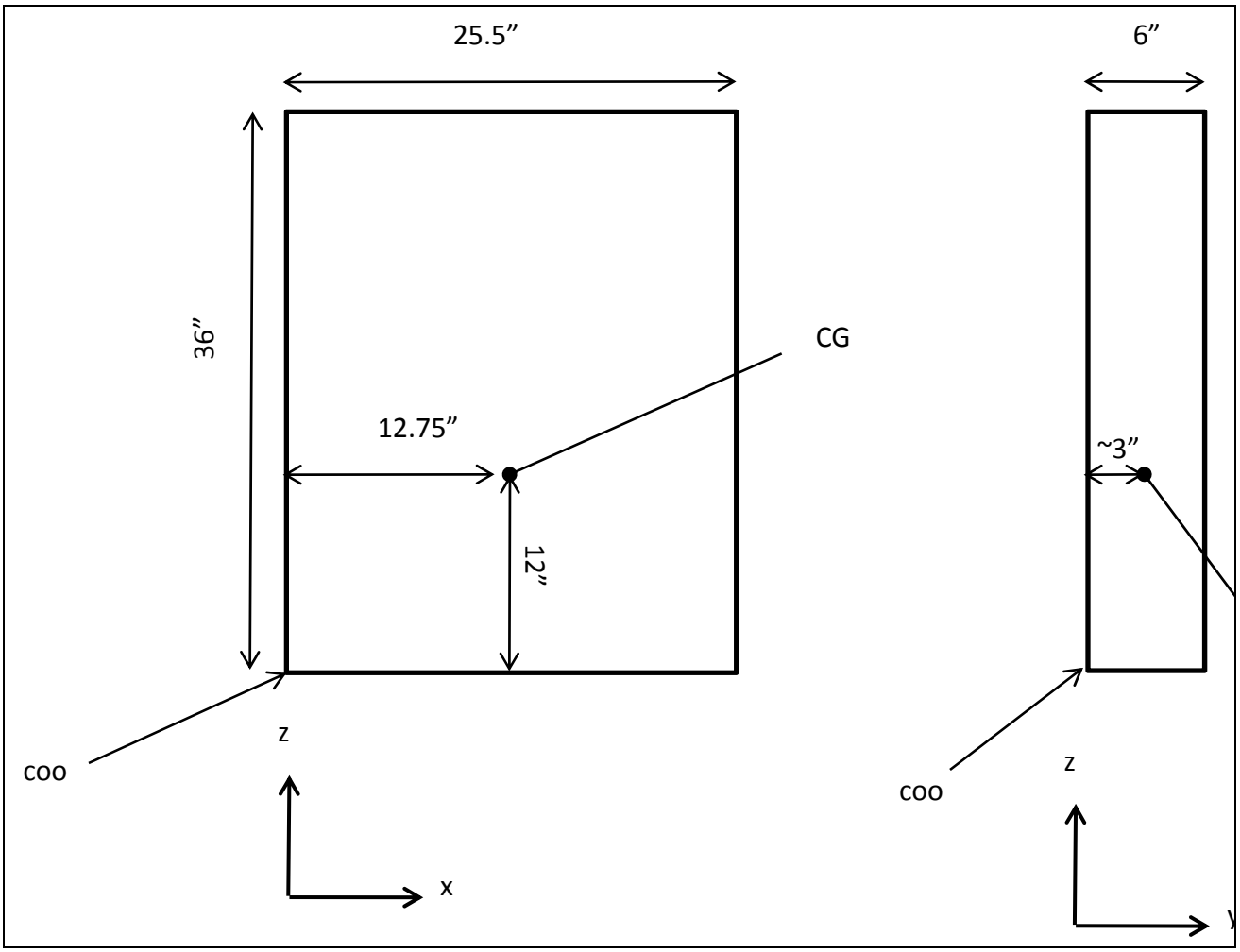
25.5”
6”
36”
CG
12.75”
~3”
12”
coo
z
x
coo
z

ANCO Engineers, Inc.
1965A 33rd Street
Boulder, CO 80301
(303)443-7580

UUT # 5

Unit Under Test (UUT) Summary Sheet

ANCO Project Number: 3295.02

Manufacturer:	UTC Fire and Safety (Manufactured in Pittsfield,, ME)
Model Line:	EST-3 Fire Alarm Control and Annunciators
Model Number:	3-RCC-21
Product Construction Summary:	Back Box /w 21 LRM Space w/ Door. Cabinet Assembly contains batteries and electronic subcomponents.
Options/ Subcomponent Summary:	Three - 3-CHAS7, One 3-CPU3, One 3-LRMF, Eleven 3-ZA40A, One 3-RS232, One 3-FIBMB, Two MMXVR, One 3-REMICP, One 3-LCD, One 3-PPS/M-120, Two 3-BPS/M-120, One 3-BBC/M-120, Two 3-12/S1GY, Two 3-12/S1RY, One 3-12/S2Y, One 3-12RY, One 3-12SG, One 3-12SR, One 3-12SY, One 3-24G, One 3-24R, One 3-24Y, One 3-6/3S1G2Y, One 3-6/3S1GYR, Two 12V-26Ah Batteries

UUT Properties

Weight (lb)	Dimensions (in)			Lowest Natural Frequency (Hz)		
	Depth	Width	Height	Front-Back	Side-Side	Vertical
169.5	6	25	48	N/A	N/A	N/A

UUT Highest Passed Seismic Run Information

Building Code	Test Criteria	S_{DS}	z/h	I_P	A_{FLX-H}	A_{RIG-H}	A_{FLX-V}	A_{RIG-V}
CBC 2010	ICC-ES AC-156	2.0g	1	1.5	3.2 g	2.4 g	2.13 g	1.6 g

Test Mounting Details:

Nine ungraded 3/16-3 inch long toggle bolts were used to attach the strut to the 5/8 inch thick type x-fire rated drywall and studs. Three pieces of strut were positioned horizontally along mounting pattern pre-drilled to the cabinet. The cabinet was attached with six anchors (2 per strut) of ungraded ¼-20TPI 1-inch long bolts into spring nuts located in the channels of the struts. Installation of screws was done in accordance with good workmanship as required for this application.

UTC installation instructions will require this or superior anchorage. Hence this tested anchorage is the least allowable seismic capacity anchorage.

ANCO Engineers, Inc.
1965A 33rd Street
Boulder, CO 80301
(303)443-7580

UUT # 5

Unit Under Test (UUT) Summary Sheet

ANCO Project Number: 3295.02

Test Setup:	Test Setup #1	
UUT Function:	Fire alarm control cabinet with Back Box, door, and 3 Local rail modules for assorted electronic components.	
Restrictions:	Wall mount only. “K”-panel, power cables, and ribbon cables must be zip ties into place.	
Functionality Test Results:	Pre-Test	Post-Test
	Pass (see detailed results attached)	Pass (see detailed results attached)
Component Serial Numbers:	ANCO 1-0	

UUT Properties

Weight (lb)	**CG Location (in)**			**Coordinate System Origin**
	Depth	**Width**	**Height**	Bottom Back Left corner (see drawing Below)
169.5	2.5	12.5	20.5	

Additional Notes/Comments:

The anchorage pattern is a rectangular 6 bolt pattern two holes wide by three holes high. The pattern is 21” wide by 42.25” high with another set of holes at 21.125” high and the same width. All 6 anchor holes were used in mounting this cabinet for testing.

Coordinate Origin (Noted by Arrows):

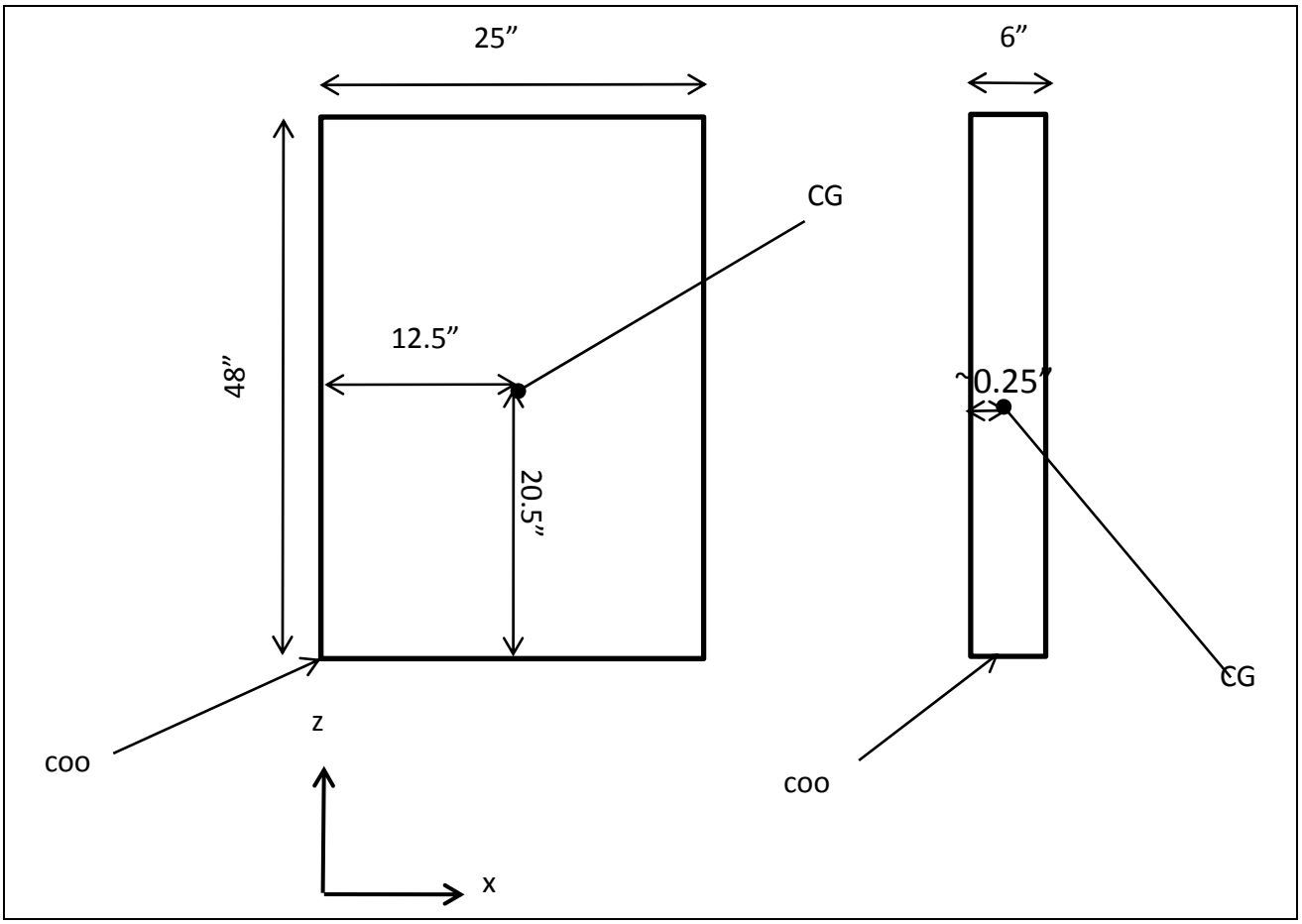
25”
6”
CG
12.5”
48”
~0.25”
20.5”
CG
z
coo
coo
x

ANCO Engineers, Inc.
1965A 33rd Street
Boulder, CO 80301
(303)443-7580

UUT # 17

Unit Under Test (UUT) Summary Sheet

ANCO Project Number: 3295.02

Manufacturer:	UTC Fire and Safety (Manufactured in China)
Model Line:	Remote Booster Power Supplies
Model Number:	APS10A
Product Construction Summary:	Cabinet Assembly with booster supply and standard door. The cabinet and the content of the cabinet is standard and does not change.
Options/ Subcomponent Summary:	MN-NETSW1, MN-FVPN, MN-ABPM, MN-PASM, MN-BRKT, SIGA-CT2, SIGA-IO & (2) 12V24A Batteries

UUT Properties

Weight (lb)	Dimensions (in)			Lowest Natural Frequency (Hz)		
	Depth	**Width**	**Height**	**Front-Back**	**Side-Side**	**Vertical**
73.5	5.325	15.25	26.5	N/A	N/A	N/A

UUT Highest Passed Seismic Run Information

Building Code	Test Criteria	S_{DS}	z/h	I_P	A_{FLX-H}	A_{RIG-H}	A_{FLX-V}	A_{RIG-V}
CBC 2010	ICC-ES AC-156	2.0g	1	1.5	3.2 g	2.4 g	2.13 g	1.6 g

Test Mounting Details:

Four ungraded 3/16-3 inch long toggle bolts were used to attach the two pieces of strut to the 5/8 inch thick type x-fire rated drywall and studs. Two pieces of strut were positioned horizontally along the top and bottom mounting patterns pre-drilled in the cabinet. The cabinet was attached with four anchors (2 per strut) of ungraded ¼-20TPI 1-inch long bolts into spring nuts located in the channels of the struts. Installation of screws was done in accordance with good workmanship as required for this application

UTC installation instructions will require this or superior anchorage. Hence this tested anchorage is the least allowable seismic capacity anchorage

ANCO Engineers, Inc.
1965A 33rd Street
Boulder, CO 80301
(303)443-7580

UUT # 17

Unit Under Test (UUT) Summary Sheet

ANCO Project Number: 3295.02

Test Setup:	Test Setup #4	
UUT Function:	Remote Auxiliary/Booster Power Supply, 10A, 120VAC	
Restrictions:	Wall Mount Only	
Functionality Test Results:	Pre-Test	Post-Test
	Pass	Pass
Component Serial Numbers:	ANCO 4-9	

UUT Properties

Weight (lb)	**CG Location (in)**			**Coordinate System Origin**
	Depth	**Width**	**Height**	Bottom Back Left corner (see drawing Below)
73.5	2.5	7.5	8.0	

Additional Notes/Comments:

The mounting pattern is a rectangular 4 bolt pattern 12” wide by 17.75” high.

Coordinate Origin (Noted by Arrows):

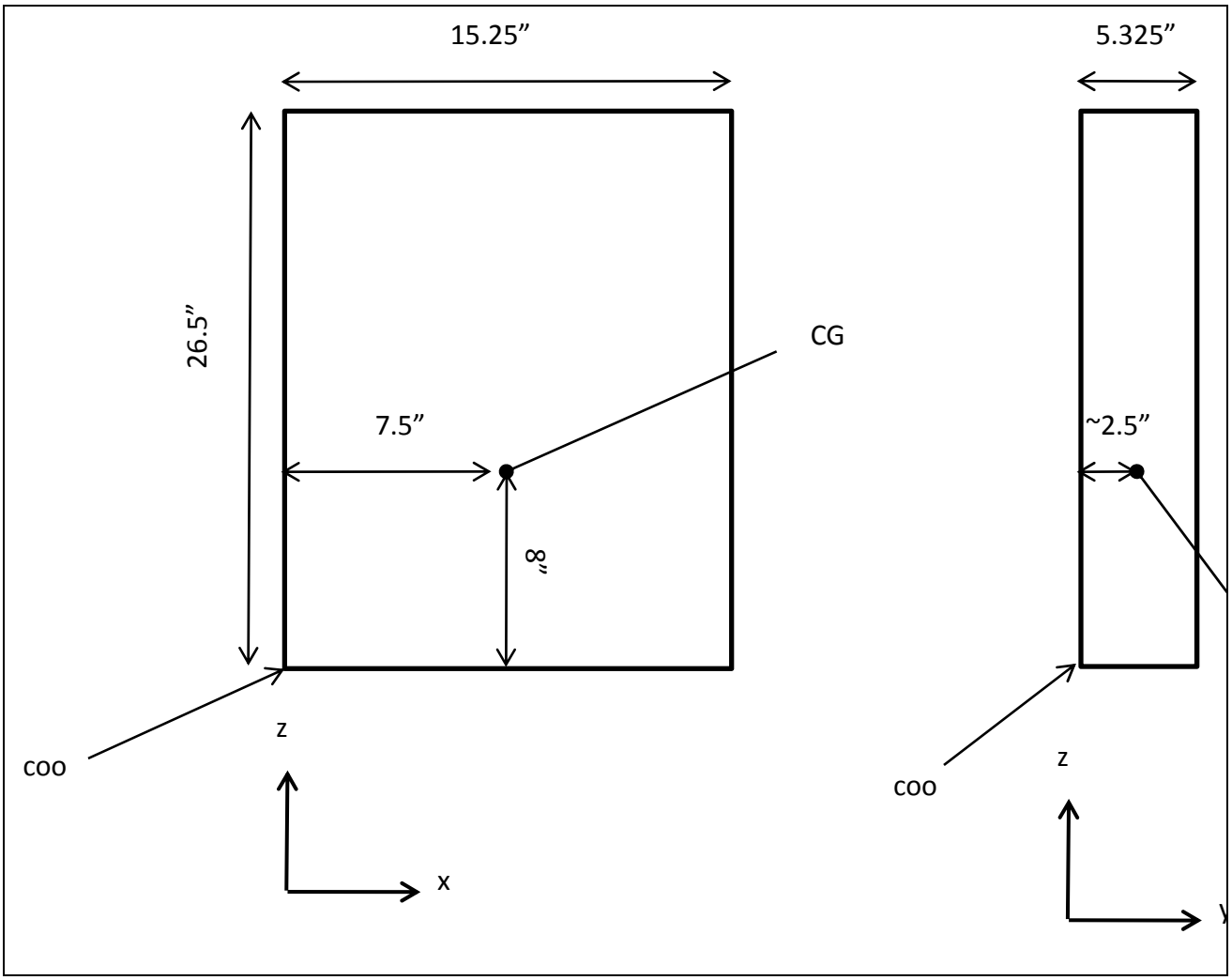
15.25”
5.325”
26.5”
CG
7.5”
~2.5”
8”
COO
z
x
COO
z

ANCO Engineers, Inc.
1965A 33rd Street
Boulder, CO 80301
(303)443-7580

UUT # 18

Unit Under Test (UUT) Summary Sheet

ANCO Project Number: 3295.02

Manufacturer:	UTC Fire and Safety (Manufactured in Pittsfield, ME)
Model Line:	BC-1 Battery Cabinet
Model Number:	BC-1
Product Construction Summary:	The BC1 includes a cabinet body, a locking door, and a terminal block with a fuse.
Options/ Subcomponent Summary:	The cabinet can hold either one or two 12V lead acid batteries up to 40 Ahr each. It was tested with two 40Ahr batteries.

UUT Properties

Weight (lb)	Dimensions (in)			Lowest Natural Frequency (Hz)		
	Depth	Width	Height	Front-Back	Side-Side	Vertical
82.5	7.325	18.25	14.0	N/A	N/A	N/A

UUT Highest Passed Seismic Run Information

Building Code	Test Criteria	S_{DS}	z/h	I_P	A_{FLX-H}	A_{RIG-H}	A_{FLX-V}	A_{RIG-V}
CBC 2010	ICC-ES AC-156	2.0g	1	1.5	3.2 g	2.4 g	2.13 g	1.6 g

Test Mounting Details:

Six ungraded 3/16-3 inch long toggle bolts were used to attach the strut to the 5/8 inch thick type x-fire rated drywall and 3 studs. Two pieces of strut were positioned horizontally along the top and bottom mounting patterns pre-drilled in the cabinet. The cabinet was attached with four anchors (2 per strut) of ungraded ¼”-20TPI 1-inch long bolts into spring nuts located in the channels of the struts. Installation of screws was done in accordance with good workmanship as required for this application.

UTC installation instructions will require this or superior anchorage. Hence this tested anchorage is the least allowable seismic capacity anchorage.

ANCO Engineers, Inc.
1965A 33rd Street
Boulder, CO 80301
(303)443-7580

UUT # 18

Unit Under Test (UUT) Summary Sheet

ANCO Project Number: 3295.02

Test Setup:	Test Setup #3	
UUT Function:	Small Battery Cabinet	
Restrictions:	Wall Mount Only	
Functionality Test Results:	Pre-Test	Post-Test
	Pass (see detailed results attached)	Pass (see detailed results attached)
Component Serial Numbers:	ANCO 3-2	

UUT Properties

Weight (lb)	**CG Location (in)**			**Coordinate System Origin**
	Depth	**Width**	**Height**	Bottom Back Left corner (see drawing Below)
82.5	3.5	9.0	4.0	

Additional Notes/Comments:

The mounting pattern is a rectangular 4 bolt pattern 16” wide by 10.6” high.

Coordinate Origin (Noted by Arrows):

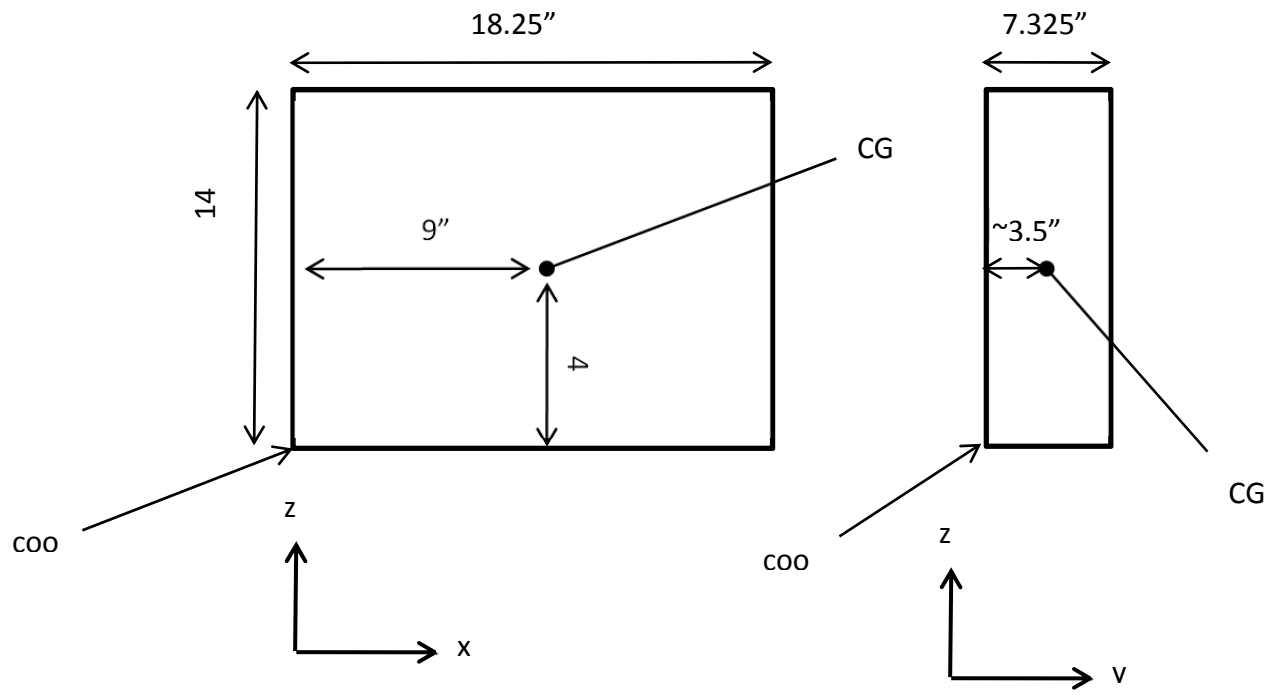

ANCO Engineers, Inc.
1965A 33rd Street
Boulder, CO 80301
(303)443-7580

UUT # 19

Unit Under Test (UUT) Summary Sheet

ANCO Project Number: 3295.02

Manufacturer:	UTC Fire and Safety (Manufactured in China)
Model Line:	Remote Booster Power Supplies
Model Number:	BPS10A
Product Construction Summary:	Cabinet Assembly with booster supply and standard door. The cabinet and the content of the cabinet is standard and does not change
Options/ Subcomponent Summary:	The BPS10A was tested with two 12V 10Ahr batteries which are the largest compatible batteries

UUT Properties

Weight (lb)	Dimensions (in)			Lowest Natural Frequency (Hz)		
	Depth	Width	Height	Front-Back	Side-Side	Vertical
34	3.75	13.25	17.5	N/A	N/A	N/A

UUT Highest Passed Seismic Run Information

Building Code	Test Criteria	S_{DS}	z/h	I_P	A_{FLX-H}	A_{RIG-H}	A_{FLX-V}	A_{RIG-V}
CBC 2010	ICC-ES AC-156	2.0g	1	1.5	3.2 g	2.4 g	2.13 g	1.6 g

Test Mounting Details:

Four ungraded 3/16-3 inch long toggle bolts were used to attach the two pieces of strut to the 5/8 inch thick type x-fire rated drywall and studs. Two pieces of strut were positioned horizontally along the top and bottom mounting patterns pre-drilled in the cabinet. The cabinet was attached with four anchors (2 per strut) of ungraded ¼-20TPI 1-inch long bolts into spring nuts located in the channels of the struts. Installation of screws was done in accordance with good workmanship as required for this application

UTC installation instructions will require this or superior anchorage. Hence this tested anchorage is the least allowable seismic capacity anchorage

ANCO Engineers, Inc.
1965A 33rd Street
Boulder, CO 80301
(303)443-7580

UUT # 19

Unit Under Test (UUT) Summary Sheet

ANCO Project Number: 3295.02

Test Setup:	Test Setup #5	
UUT Function:	Remote Booster Power Supply, 10A, 120VAC	
Restrictions:	Wall Mount Only	
Functionality Test Results:	Pre-Test	Post-Test
	Pass	Pass
Component Serial Numbers:	ANCO 5-9	

UUT Properties

Weight (lb)	**CG Location (in)**			**Coordinate System Origin**
	Depth	**Width**	**Height**	Bottom Back Left corner (see drawing Below)
34.0	1.8	7.0	6.0	

Additional Notes/Comments:

The coordinates of the 4 anchorage points relative to the lower left anchor are as follows:
Lower Left: (0,0,0)
Lower Right: (11,0,0)
Upper Left: (1.5,0,11)
Upper Right: (8,0,11)

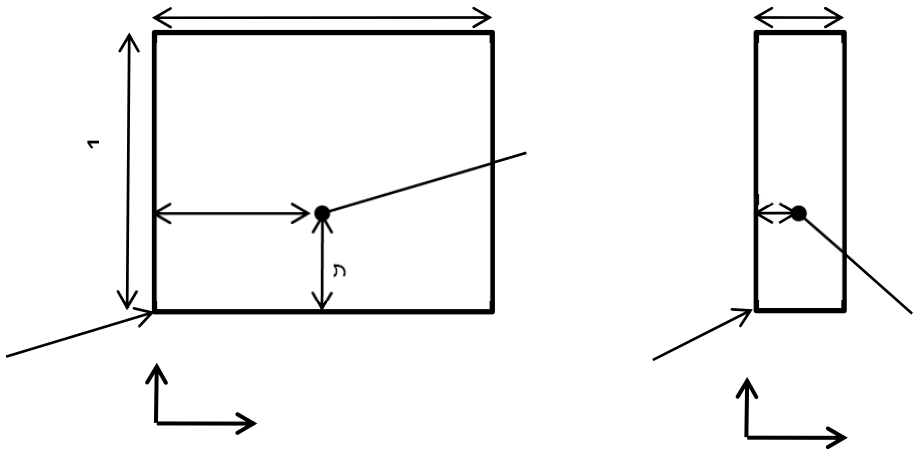

Coordinate Origin (

Noted by Arrows):

ANCO Engineers, Inc.
1965A 33rd Street
Boulder, CO 80301
(303)443-7580

UUT # 20

Unit Under Test (UUT) Summary Sheet

ANCO Project Number: 3295.02

Manufacturer:	UTC Fire and Safety (Manufactured in Pittsfield, ME)
Model Line:	Fireworks Controller
Model Number:	FW4UL4
Product Construction Summary:	Fireworks controller PC Mounted using sliding RETMA rack rails.
Options/ Subcomponent Summary:	FW-SP4I, PCWD2, FW-RACKPC, FW-RACKSD, FW-19LCDT3RACK

UUT Properties

Weight (lb)	Dimensions (in)			Lowest Natural Frequency (Hz)		
	Depth	Width	Height	Front-Back	Side-Side	Vertical
43.0	7.0	17.0	20.0	>5Hz	>5Hz	>5Hz

UUT Highest Passed Seismic Run Information

Building Code	Test Criteria	S_{DS}	z/h	I_P	A_{FLX-H}	A_{RIG-H}	A_{FLX-V}	A_{RIG-V}
CBC 2010	ICC-ES AC-156	2.0g	1	1.5	3.2 g	2.4 g	2.13 g	1.6 g

Test Mounting Details:

There is only one mounting configuration for this PC. It is bolted into a rack using standard sliding RETMA rails and is anchored to the rack in both the front and the rear of the cabinet.

Ungraded #10-32 screws were used by through bolting to ungraded #10-32 nuts in Anco's rigid aluminum rack, whereas the commercial rack had tapped #10-32 RETMA mounting holes, making nuts unnecessary. New screws were used in each fixture, but they were always ungraded #10-32 hardware.

ANCO Engineers, Inc.
1965A 33rd Street
Boulder, CO 80301
(303)443-7580

UUT # 20

Unit Under Test (UUT) Summary Sheet

ANCO Project Number: 3295.02

Test Setup:	Test Setup #7a (rigid Mount); #7b (Rack Cabinet)	
UUT Function:	Fireworks PC	
Restrictions:	Usage with Fireworks Monitoring System	
Functionality Test Results:	Pre-Test	Post-Test
	Pass	Pass
Component Serial Numbers:	Anco 7-2	

UUT Properties

Weight (lb)	**CG Location (in)**			**Coordinate System Origin**
	Depth	**Width**	**Height**	Bottom Back Left corner (see drawing Below)
43.0	3.5	7.75	9.5	

Coordinate Origin (Noted by Arrows):

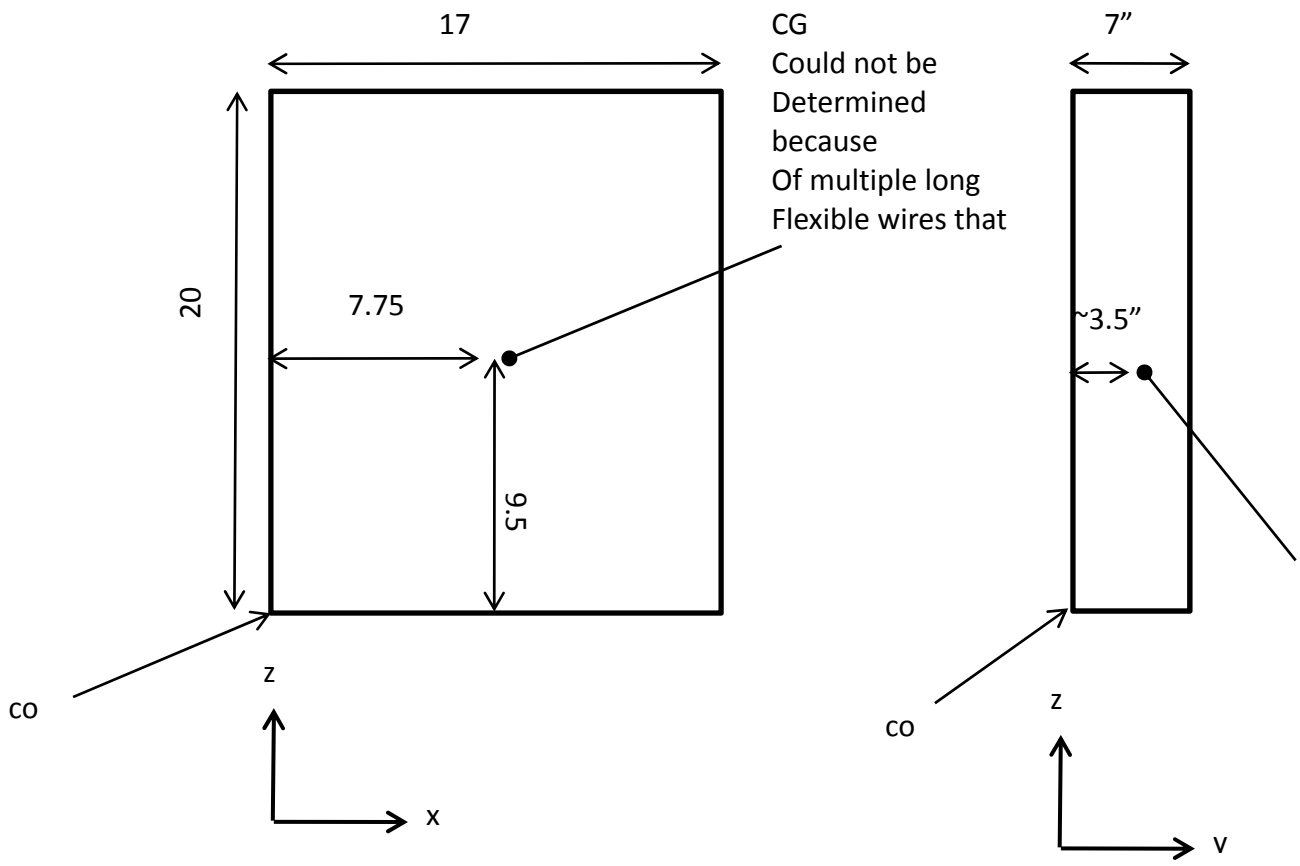

ANCO Engineers, Inc.
1965A 33rd Street
Boulder, CO 80301
(303)443-7580

UUT # 21

Unit Under Test (UUT) Summary Sheet

ANCO Project Number: 3295.02

Manufacturer:	UTC Fire and Safety (Manufactured in Pittsfield, ME)
Model Line:	Fireworks Monitor
Model Number:	FW-19LCDTS3W
Product Construction Summary:	This touch screen monitor is sold with a rack mount kit for mounting to a standard RETMA cabinet. It is connected to the control PC via a standard VGA video cable and the touch screen control interfaces with the control PC via a USB cable
Options/ Subcomponent Summary:	FW-SP4I, PCWD2, FW-RACKPC, FW-RACKSD, FW-19LCDT3RACK

UUT Properties

Weight (lb)	Dimensions (in)			Lowest Natural Frequency (Hz)		
	Depth	Width	Height	Front-Back	Side-Side	Vertical
16.0	2.75	17.25	11.5	N/A	N/A	N/A

UUT Highest Passed Seismic Run Information

Building Code	Test Criteria	S_{DS}	z/h	I_P	A_{FLX-H}	A_{RIG-H}	A_{FLX-V}	A_{RIG-V}
CBC 2010	ICC-ES AC-156	2.0g	1	1.5	3.2 g	2.4 g	2.13 g	1.6 g

Test Mounting Details:

Standard 19 inch rack mount using four ungraded #10-32 screws to fasten equipment to rack front face.

For the rigid rack the #10-32 screws were through bolted on the rack's rails.

For the standard rack the #10-32 screws were threaded directly into the tapped rack rails.

ANCO Engineers, Inc.
1965A 33rd Street
Boulder, CO 80301
(303)443-7580

UUT # 20

Unit Under Test (UUT) Summary Sheet

ANCO Project Number: 3295.02

Test Setup:	Test Setup #7a (rigid Mount); #7b (Rack Cabinet)	
UUT Function:	Touch Screen Monitor	
Restrictions:	Only for usage with Fireworks Monitoring System	
Functionality Test Results:	Pre-Test	Post-Test
	Pass	Pass
Component Serial Numbers:	Anco 7-1	

UUT Properties

Weight (lb)	**CG Location (in)**			**Coordinate System Origin**
	Depth	**Width**	**Height**	Bottom Back Left corner (see drawing Below)
16.0	1.75	8.6	5.5	

Additional Notes/Comments:

None

Coordinate Origin (Noted by Arrows):

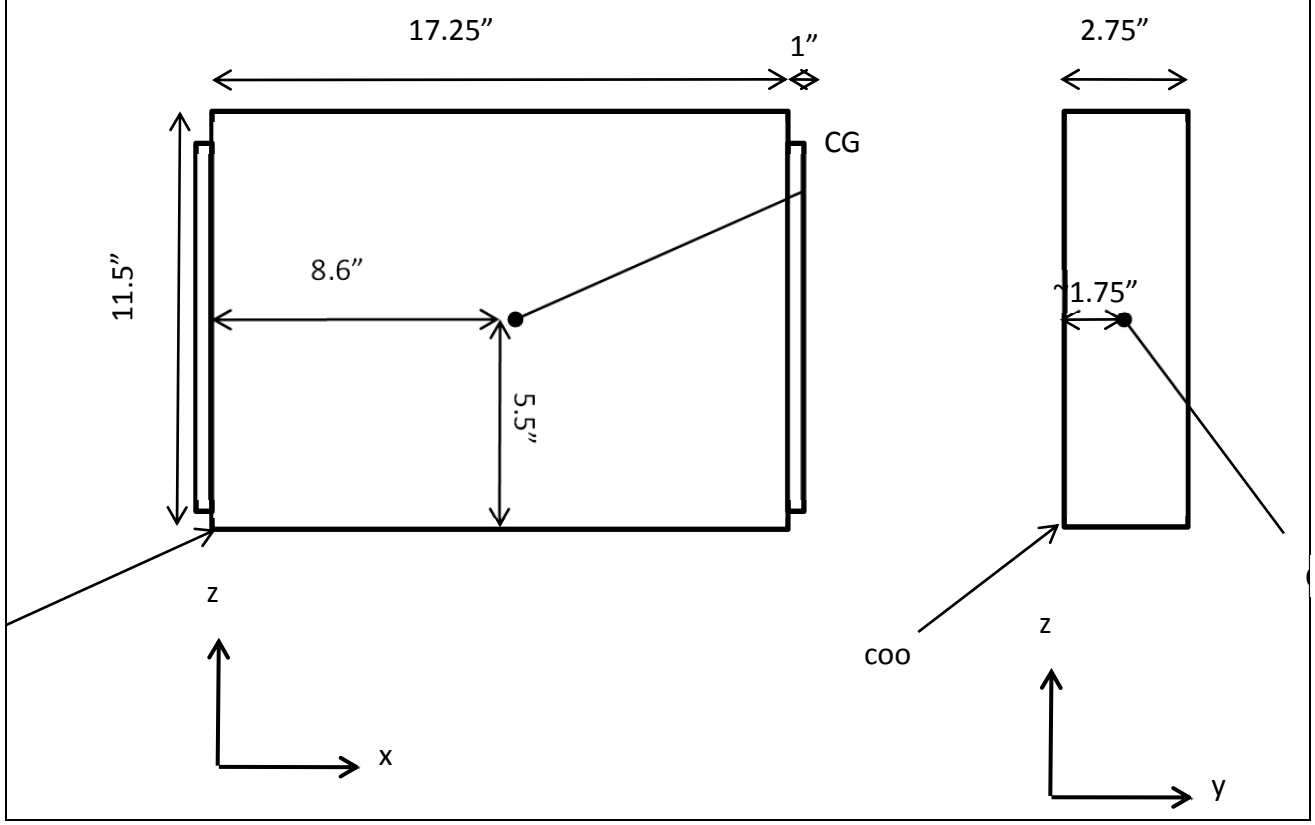

ANCO Engineers, Inc.
1965A 33rd Street
Boulder, CO 80301
(303)443-7580

UUT # 38

Unit Under Test (UUT) Summary Sheet

ANCO Project Number: 3295.02

Manufacturer:	UTC Fire and Safety (Manufactured in Pittsfield, ME)
Model Line:	Super Duct Detectors
Model Number:	SD-4WJ
Product Construction Summary:	The SD-4WJ is a combination controller and detector which is intended for duct mounting. The sensor used was the SD-SJ which attaches to the SD-CJ controller using 3 screws as per UTC specifications. Two sample tubes are attached to the sensor (one intake and one exhaust) by way of locking press fit connections
Options/ Subcomponent Summary:	TSD-CJ (24" long OVP Branding sample tube) ESD-CJ (OVP Branding sample tube) SD-CJ (Controller) SD-SJ (Sensor)

UUT Properties

Weight (lb)	Dimensions (in)			Lowest Natural Frequency (Hz)		
	Depth	**Width**	**Height**	**Front-Back**	**Side-Side**	**Vertical**
3.24	25.25	5.5	13.5	N/A	N/A	N/A

UUT Highest Passed Seismic Run Information

Building Code	Test Criteria	S_{DS}	z/h	I_P	A_{FLX-H}	A_{RIG-H}	A_{FLX-V}	A_{RIG-V}
CBC 2010	ICC-ES AC-156	2.0g	1	1.5	3.2 g	2.4 g	2.13 g	1.6 g

Test Mounting Details:

Two ungraded #8 wood screws were used to attach the SD-4WJ assembly directly to the 0.75 inch thick plywood duct wall. Two holes were drilled in the mounting side of the duct so that the sample tubes could pass into the duct. One hole was drilled on the opposite side of the duct so that the intake tube would be supported on both ends. This installation is standard and does not vary from duct to duct.

Internal module-to-module attachments are per UTC specifications.

ANCO Engineers, Inc.
1965A 33rd Street
Boulder, CO 80301
(303)443-7580

UUT # 38

Unit Under Test (UUT) Summary Sheet

ANCO Project Number: 3295.02

Test Setup:	Test Setup #6	
UUT Function:	4 wire max smoke detector and control unit with AC supply.	
Restrictions:	Duct mount only. Any sample tube longer than 5 feet must be supported to prevent resonances in the seismically significant range. See Attachment I for details.	
Functionality Test Results:	Pre-Test	Post-Test
	Pass	Pass
Component Serial Numbers:	Anco 6-3	

UUT Properties

Weight (lb)	**CG Location (in)**			**Coordinate System Origin**
	Depth	**Width**	**Height**	Bottom Back Left corner (see drawing Below)
3.24	- 1.3	2.75	7.5	

Additional Notes/Comments:

The 24 inch sample tube weighs enough to move the CG of the assembly outside of the body of the SD-4WJ

Coordinate Origin (Noted by Arrows):

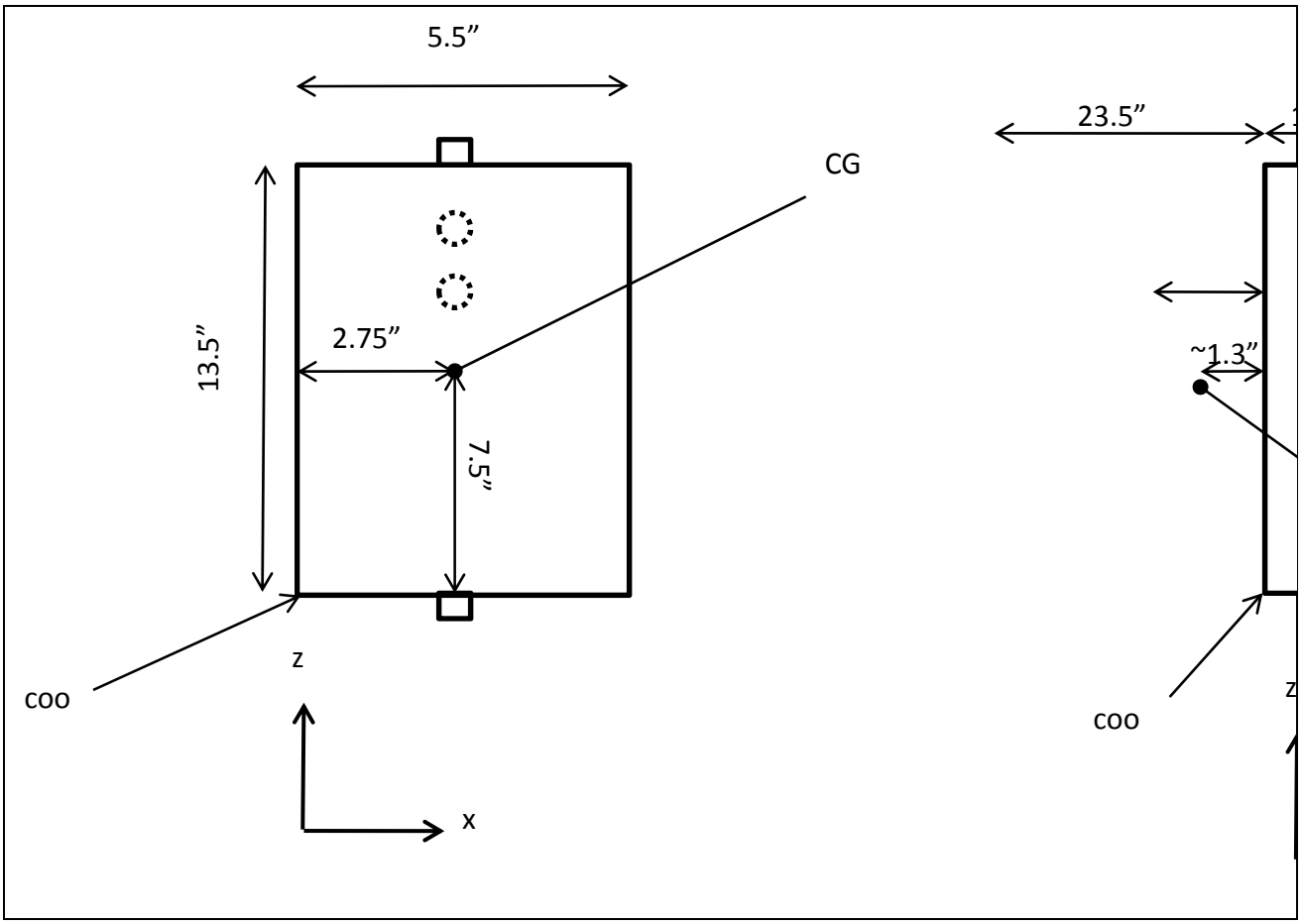
5.5”
23.5”
CG
13.5”
2.75”
7.5”
~1.3”
coo
z
x
coo
z

ANCO Engineers, Inc.
1965A 33rd Street
Boulder, CO 80301
(303)443-7580

UUT # 54

Unit Under Test (UUT) Summary Sheet

ANCO Project Number: 3295.02

Manufacturer:	UTC Fire and Safety (Manufactured in Pittsfield, ME)
Model Line:	SIGAM M-Series
Model Number:	SIGA-UIO2R
Product Construction Summary:	Interface board fastened to an MFC-A wall mounting box
Options/ Subcomponent Summary:	SIGA-UIO2R populated with: SIGA-MCC2A (Dual Output Signal Module) SIGA-MDM (Digital Message Module)

UUT Properties

Weight (lb)	Dimensions (in)			Lowest Natural Frequency (Hz)		
	Depth	Width	Height	Front-Back	Side-Side	Vertical
3.61	3.5	7.75	13.75	N/A	N/A	N/A

UUT Highest Passed Seismic Run Information

Building Code	Test Criteria	S_{DS}	z/h	I_P	A_{FLX-H}	A_{RIG-H}	A_{FLX-V}	A_{RIG-V}
CBC 2010	ICC-ES AC-156	2.0g	1	1.5	3.2 g	2.4 g	2.13 g	1.6 g

Test Mounting Details:

Two 3/16-3 inch long toggle bolts were used to mount the MFC-A box to the 5/6 inch thick type-x fire rated dry wall.

Installation was performed UTC standard. Unit was internally mounted to the MFC-A cabinet. No alternative cabinet mounting configuration.

ANCO Engineers, Inc. 1965A 33rd Street Boulder, CO 80301 (303)443-7580	**UUT # 54** **Unit Under Test (UUT) Summary Sheet** ANCO Project Number: 3295.02

Test Setup:	Test Setup #5	
UUT Function:	Two Slot motherboard	
Restrictions:	None	
Functionality Test Results:	Pre-Test	Post-Test
	Pass (see detailed results attached)	Pass (see detailed results attached)
Component Serial Numbers:	Anco 3-3	

UUT Properties

Weight (lb)	**CG Location (in)**			**Coordinate System Origin**
	Depth	**Width**	**Height**	Bottom Back Left corner (see drawing Below)
3.61	1.0	4.0	6.75	

Coordinate Origin (Noted by Arrows):

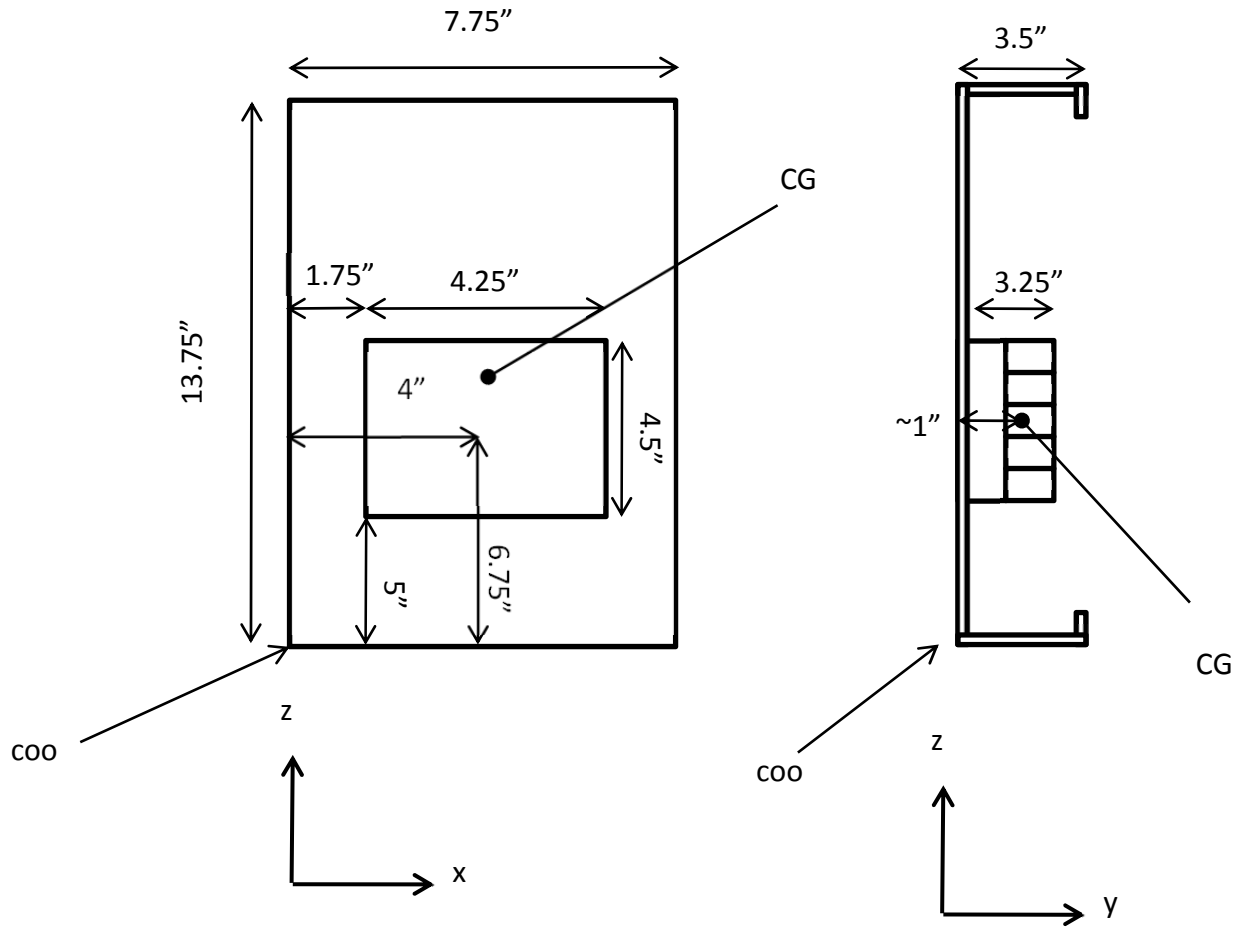

ANCO Engineers, Inc.
1965A 33rd Street
Boulder, CO 80301
(303)443-7580

UUT # 55

Unit Under Test (UUT) Summary Sheet

ANCO Project Number: 3295.02

Manufacturer:	UTC Fire and Safety (Manufactured in Pittsfield, ME)
Model Line:	SIGAM M-Series
Model Number:	SIGA-UIO6
Product Construction Summary:	Interface board fastened to an MFC-A wall mounting box
Options/ Subcomponent Summary:	SIGA-UIO6 populated with: SIGA-MIO (Digital Message Module) SIGA-MCC2 (Dual Output) SIGA-MRM1 (Rider Monitor) SIGA-MCT2 (Dual Input) SIGA-MCR (Relay) SIGA-MAB (Universal)

UUT Properties

Weight (lb)	Dimensions (in)			Lowest Natural Frequency (Hz)		
	Depth	Width	Height	Front-Back	Side-Side	Vertical
5.54	3.5	7.75	13.75	N/A	N/A	N/A

UUT Highest Passed Seismic Run Information

Building Code	Test Criteria	S_{DS}	z/h	I_P	A_{FLX-H}	A_{RIG-H}	A_{FLX-V}	A_{RIG-V}
CBC 2010	ICC-ES AC-156	2.0g	1	1.5	3.2 g	2.4 g	2.13 g	1.6 g

Test Mounting Details:

Installation was performed UTC standard. Unit was internally mounted to the MFC-A cabinet. No alternative cabinet mounting configuration

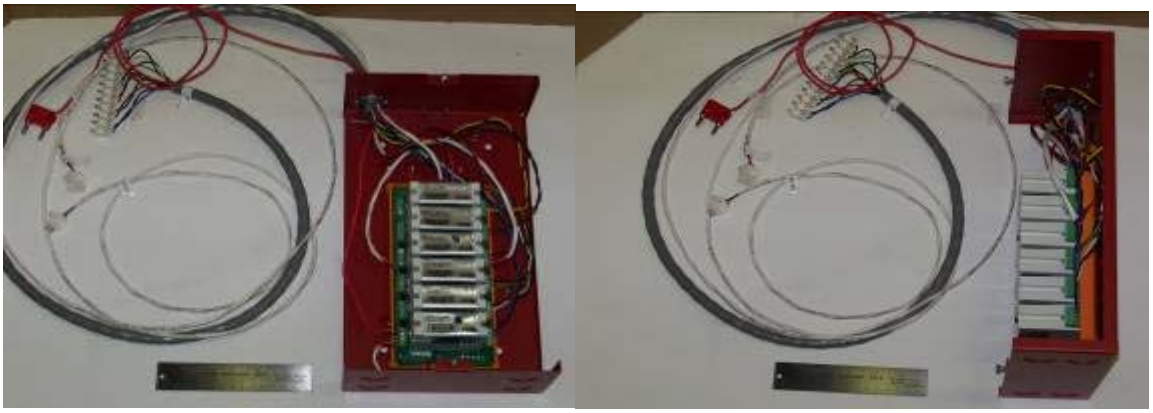

.

ANCO Engineers, Inc.
1965A 33rd Street
Boulder, CO 80301
(303)443-7580

UUT # 55

Unit Under Test (UUT) Summary Sheet

ANCO Project Number: 3295.02

Test Setup:	Test Setup #3	
UUT Function:	Six Slot motherboard	
Restrictions:	Mounted internal to cabinet MFC-A	
Functionality Test Results:	Pre-Test	Post-Test
	Pass	Pass
Component Serial Numbers:	Anco 3-1	

UUT Properties

Weight (lb)	**CG Location (in)**			**Coordinate System Origin**
	Depth	**Width**	**Height**	Bottom Back Left corner (see drawing Below)
5.54	1.0	3.76	6.75	

Coordinate Origin (Noted by Arrows):

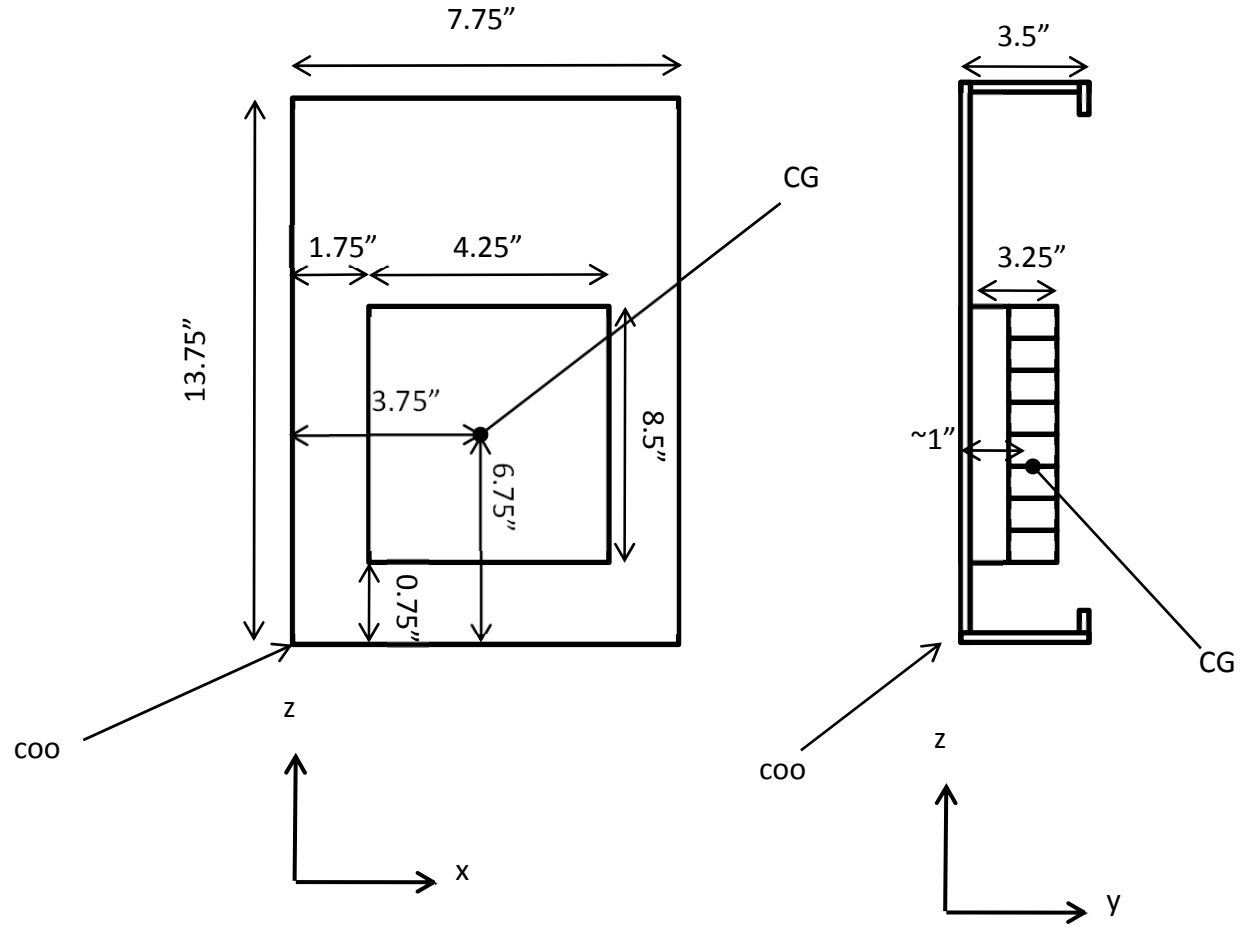

Certified Product Matrix

GE Model to UUT Index (Note: Highlighted Cat No indicates tested item)

Tested Ref. UUT #	Tested Ref. Part #	GE Part #	Description	Difference From Tested Item (If Untested)		
				Mass	Change From Tested Part	Mounting
28	12V1A2	12V1A2	1.2 Ah Sealed Lead Acid Battery	Tested		
19	12V10A	12V10A	11Ah Sealed Lead Acid Battery	Tested		
19	12V10A	12V4A	4.5Ah Sealed Lead Acid Battery	30% less mass	current capacity	same
19	12V10A	12V6A5	7.2Ah Sealed Lead Acid Battery	20% less mass	current capacity	same
2,3	12V18A	12V17A	17Ah Sealed Lead Acid Battery	5% less mass	current capacity	same
2,3	12V18A	12V18A	18 Ah Sealed Lead Acid Battery	Tested		
17	12V24A	12V24A	26Ah Sealed Lead Acid Battery	Tested		
18	12V40A	12V40A	40Ah Sealed Lead Acid Battery	Tested		
4	12V65A	12V50A	50Ah Sealed Lead Acid Battery	30% less mass	current capacity	same
4	12V65A	12V65A	65Ah Sealed Lead Acid Battery	Tested		
6	202-8A-T	202-3A-T	Strobe	Same mass	strobe brightness	Same
6	202-8A-T	202-3A-TW	Strobe	Same mass	color and strobe brightness	Same

Tested	Tested Ref.	GE Part #	Description	Difference From Tested Item (If Untested)		
6	202-8A-T	202-5A-T	Strobe	Same mass	strobe brightness	Same
6	202-8A-T	202-5A-TW	Strobe	Same mass	color and strobe brightness	Same
6	202-8A-T	202-6A-T	Strobe	Same mass	strobe brightness	Same
6	202-8A-T	202-7A-T	Strobe	Same mass	color and strobe brightness	Same
6	202-8A-T	202-7A-TW	Strobe	Same mass	color and strobe brightness	Same
6	202-8A-T	202-8A-T	Strobe, 110cd with 2 mounting screws	Tested		
6	202-8A-T	202-8A-TR	Strobe (red)	Same mass	color	Same
6	202-8A-T	202-8A-TW	Strobe (white)	Same mass	color	Same
6	202-8A-T	2440S-110R-N5	Strobe (OVP Branding)	Same mass	sold under a different co. name	Same
6	202-8A-T	2440S-15/75-R	Strobe (OVP Branding)	Same mass	sold under a different co. name	Same
6	202-8A-T	2440S-15/75-W	Strobe (OVP Branding)	Same mass	sold under a different co. name	Same
6	202-8A-T	2441S-110-R	Strobe (OVP Branding)	Same mass	sold under a different co. name	Same
6	202-8A-T	2441S-15/75-R	Strobe (OVP Branding)	Same mass	sold under a different co. name	Same
6	202-8A-T	2447TH-R	Strobe (OVP Branding)	Same mass	sold under a different co.	Same

Tested	Tested Ref.	GE Part #	Description	Difference From Tested Item (If Untested)		
					name	
6	202-8A-T	2452THS-110-R	Strobe (OVP Branding)	Same mass	sold under a different co. name	Same
6	202-8A-T	2452THS-15/75-R	Strobe (OVP Branding)	Same mass	sold under a different co. name	Same
6	202-8A-T	2452THS-15/75-W	Strobe (OVP Branding)	Same mass	sold under a different co. name	Same
6	202-8A-T	2453BSA-15/75-R	Strobe (OVP Branding)	Same mass	sold under a different co. name	Same
7	204-12/24VG	204-12/24VG	Accessory Relay, basic	Tested		
41	SIGA-278	276A-REL	Pull Station (reduced hardware from SIGA-278, different functional feature set, color and marking)	20% less mass	one less module, different color and different marking	
41	SIGA-278	278A-REL	Pull Station (reduced hardware from SIGA-278, different functional feature set, color and marking)	20% less mass	one less module, different color and different marking	
41	SIGA-278	XLS278A-REL	Pull Station (OEM Branding, same hardware as SIGA 278A-REL, different functional feature set)	same	sold under a different co. name	same
8	280A-MPL	280A-MPL	Replacement mounting trim ring, Part of the 28(1,2,3,4)B-PL heat sensor		replacement part	
8	280A-PL	280A-PL	Replacement mounting plate, Part of the 28(1,2,3,4)B-PL heat sensor		replacement part	

Tested	Tested Ref.	GE Part #	Description	Difference From Tested Item (If Untested)		
8	281B-PL	281B-PL	Heat sensor, 135F fixed, Rate of Rise, low-temp	tested		
8	281B-PL	282B-PL	Heat sensor, Same as 281B-PL, 194F fixed, high-temp	same	different operation	same
8	281B-PL	283B-PL	Heat sensor, Same as 281B-PL, low-temp, rate of rise feature deleted	same	different operation	
8	281B-PL	284B-PL	Heat sensor, Same as 281B-PL, high-temp, rate of rise feature deleted	same	different operation	
2,3,5	3-SDC1	3-SDC1	Signature Data Card for Controller	Tested		
1	3-10ANN	3-10ANN	Annunciator /w CPU, 2 of 3-ANNSM, 6 of 3-ANNBF	Tested		
1	3-10ANN	3-4ANN	Annunciator /w CPU, 2 of 3-ANNSM	50% less mass	mounts in shorter box fits 4 cards not 10	same
1	3-10ANN	3-6ANN	Annunciator /w CPU, 2 of 3-ANNSM, 2 of 3-ANNBF	10% less mass	mounts in shorter box fits 6 cards not 10	same
1	10ANN/B-S	10ANN/B	Semi-flush Annunciator Wall Box- 10 Position	Tested		
1	10ANN/B-S	10ANN/B-S	Surface Annunciator Wall Box- 10 Position	Tested		
1	10ANN/B-S	4ANN/B	Semi-flush Annunciator Wall Box	50% less mass	shorter box fits 4 cards not 10	same
1	10ANN/B-S	4ANN/B-S	Surface Annunciator Wall Box	50% less mass	shorter box fits 4 cards not 10	same
1	10ANN/B-S	6ANN/B	Semi-flush Annunciator Wall Box	10% less mass	shorter box fits 6 cards	same

Tested	Tested Ref.	GE Part #	Description	Difference From Tested Item (If Untested)		
					not 10	
1	10ANN/B-S	6ANN/B-S	Surface Annunciator Wall Box	10% less mass	shorter box fits 6 cards not 10	same
1	10ANN/B-S	RLCM/B	Semi-flush Annunciator Wall Box for 3-LCDANN	80% less mass	shorter box fits 2 cards not 10	same
1	10ANN/B-S	RLCM/B-S	Surface Annunciator Wall Box for 3-LCDANN	80% less mass	shorter box fits 2 cards not 10	same
1	10ANN/B-S	VM-RLCM/B-S	Semi-flush Annunciator Wall Box for 3-LCDANN	80% less mass	Branding, shorter box fits 2 cards not 10	same
1	10ANN/B-S	VM-RLCM/D	Surface Annunciator Wall Box for 3-LCDANN	80% less mass	Branding, shorter box fits 2 cards not 10	same
1	10ANN/B-S	VM-ARM	Remote Microphone (VM-REMICA) with VM-RLCM/B, Semi-Flush mount	80% less mass	Branding, shorter box fits 2 cards not 10	same
1	10ANN/B-S	VM-ARM-S	Remote Microphone (VM-REMICA) with VM-RLCM/B-S, Flush mount	80% less mass	Branding, shorter box fits 2 cards not 10	same
1,2,5	3-12/S1GY	3-12/S1GY	LED Display/Control Module - 12 Switches, 1 GREEN, 1 YELLOW LED per switch	Tested		
1,2,5	3-12/S1RY	3-12/S1RY	LED Display/Control Module - 12 Switches, 1 RED, 1 YELLOW	Tested		

Tested	Tested Ref.	GE Part #	Description	Difference From Tested Item (If Untested)		
			LED per switch			
1,2,3,5	3-12/S2Y	3-12/S2Y	LED Display/Control Module - 12 Switches with 2 YELLOW LEDs per switch	Tested		
3,5	3-12RY	3-12RY	LED Display Module - 12 pairs of LEDs (1 RED; 1 YELLOW)	Tested		
3	3-12SG	3-12SG	LED Display/Control Module - 12 Switches with 12 GREEN LEDs	Tested		
3	3-12SR	3-12SR	LED Display/Control Module - 12 Switches with 12 RED LEDs	Tested		
3,5	3-12SY	3-12SY	LED Display/Control Module - 12 Switches with 12 YELLOW LEDs	Tested		
3,5	3-24G	3-24G	LED Display Module - 24 GREEN	Tested		
3,5	3-24G	3-XFP	Filler Plate for Inner Door to Cover Chassis Space	10% less mass	plastic plate only, no electronics	same
3,5	3-24R	3-24R	LED Display Module - 24 RED	Tested		
3,5	3-24Y	3-24Y	LED Display Module - 24 YELLOW	Tested		
1,2,3,5	3-6/3S1GYR	3-4/3SGYWR	12 switches in 4 groups of three switches, switch one with a green LED, switch two with yellow and white LEDs and switch three with a red LED	Same	different color LED's and fewer switches	same
1,2,3	3-6/3S1G2Y	3-6/3S1G2Y	LED & Switch Module - 6 Groups of 3 Switches with 1 LED each (GREEN AND YELLOW)	Tested		
1,2,3,5	3-6/3S1GYR	3-6/3S1GYR	LED & Switch Module - 6 Groups of 3 Switches with 1	Tested		

Tested	Tested Ref.	GE Part #	Description	Difference From Tested Item (If Untested)		
			LED each (GREEN AND RED)			
5	3-SSDC1	3-AADC1	Analog Driver Controller (LRM)	Same	Different firmware	same
1	3-ANNBF	3-ANNBF	Annunciator Blank Filler Plate	Tested		
1	3-ANNCPU3	3-ANNCPU3	Annunciator CPU w/ RS485 Board	Tested		
1	3-ANNCPU3 & 3-LCD	3-LCDANN	Remote LCD Command Module Annunciator of the 3-LCDANN is a combination of the 3-ANNCPU3, 3-LCD and doors.	Tested		
1	3-ANNSM	3-ANNSM	Annunciator LED Display Support Module	Tested		
3	3-ASU	3-ASU	Audio Source Unit	Tested		same
2	3-ASU/FT	3-ASU/FT	Audio Source Unit w/ Firefighter Telephone the 3-ASU/FT is a combination of the 3-ASU and 3-FTCU	Tested		
2	3-ASU/FT	3-FTCU	Firefighter Telephone	Tested		same
4	3-BATS	3-BATS	Battery Shelf for Single 65AH Cell	Tested		
2,5	3-BBC/M-120	3-BBC/M-120	Booster Power Supply 120V, Multiple Batteries	Tested		
2,5	3-BBC/M-120	3-BBC/M-220	Booster Power Supply 220V, Multiple Batteries	same mass	220v version	same
5	3-BPS/M-120	3-BPS/M-120	Booster Power Supply 120V	Tested		
5	3-BPS/M-120	3-BPS/M-220	Booster Power Supply 220V	same mass	220v version	same
4	3-BTSEN	3-BTSEN	Battery Cabinet Power Distribution bus & 50A breaker	Tested		
2	3-CAB14B	3-CAB14B	Cabinet Back Box /w 14 LRM Space w/o Door	Tested		

Tested	Tested Ref.	GE Part #	Description	Difference From Tested Item (If Untested)		
2	3-CAB14B	3-CAB7B	Cabinet Back Box /w 7 LRM Space w/o Door	20% less mass	shorter box fits 7 cards not 14	Same
2	3-CAB14D	3-CAB14D	Door Assembly for 3-CAB14	Tested		
2	3-CAB14D	3-CAB7D	Door Assembly for 3-CAB7	20% less mass	shorter box fits 7 cards not 14	Same
3	3-CAB21B	3-CAB21B	Cabinet Back Box /w 21 LRM Space w/o Door	Tested		
3	3-CAB21D	3-CAB21D	Door Assembly for 3-CAB21	Tested		
3	3-CHASS4	3-CHASS4	Chassis Ass'y for 4 LRMs	Tested		
2,3,5	3-CHAS7	3-CHAS7	Chassis Ass'y for 7 LRMs	Tested		
2,3,5	3-CPU3	3-CPU3	Central Processor Module	Tested		
3,5	3-FIBMB	3-FIBMB	Fiber Card, /w adaptor card, ribbon cable, mtg bracket	Tested		
3	3-IDC 8/4	3-IDC 8/4	Initiating / Indicating Device Circuit Module	Tested		
1,2,5	3-LCD	3-LCD	Liquid Crystal Display Module	Tested		
3	3-LCDXL1	3-LCDXL1	Liquid Crystal Display Module, Large	Tested		
3	3-LDSM	3-LDSM	Annunciator Driver Module (LRM)	Tested		
3,5	3-LRMF	3-LRMF	Blank Filler (LRM)	Tested		
3	3-MODCOMP	3-MODCOM	Modem Communicator and Dialer	same mass	software	same
3	3-MODCOMP	3-MODCOMP	Modem Communicator and Dialer w/ pager option	Tested		
5	3-OPS	3-OPS	Off Premise Signal Module	Tested		
2,3	3-PPS/M-120	3-PPS/M-120	Primary Power Supply 120V	Tested		
2,3	3-PPS/M-120	3-PPS/M-220	Primary Power Supply 220V	same mass	220v version	same

Tested	Tested Ref.	GE Part #	Description	Difference From Tested Item (If Untested)		
4	3-RCC14B	3-RCC14B	Back Box /w 14 LRM Space w/o Door	Tested		
4	3-RCC14B	3-RCC7B	Back Box /w 7 LRM Space w/o Door	20% less mass	shorter box fits 7 cards not 14	Same
4	3-RCC14D	3-RCC14D	Door Assembly for 3-RCC14	Tested		
4	3-RCC14D	3-RCC7D	Door Assembly for 3-RCC7	20% less mass	shorter box fits 7 cards not 14	Same
5	3-RCC21B	3-RCC21B	Back Box /w 21 LRM Space w/o Door	Tested		
5	3-RCC21D	3-RCC21D	Door Assembly for 3-RCC21	Tested		
1	3-REMICA	3-REMICA	Remote Mic Unit - Ann Mount	Tested		
1	3-REMICA	VM-REMICA	Remote Mic Unit - Ann Mount	Same	Branding	Same
5	3-REMICP	3-REMICP	Remote MIC Panel Mount	Tested		
2,3,5	3-RS232	3-RS232	RS232 Communication Card	Tested		
2	3-RS485A	3-RS485A	Network Communication Card, Class A	Tested		
2	3-RS485A	3-RS485B	Network Communication Card, Class B	5% less mass	one less communicati on port	same
2	3-SAC	3-SAC	Security/Access Control Module, Class B	Tested		
2,3	3-SDDC1	3-DSDC1	Signature Dual Driver Controller (LRM)	same mass	sold under a different co. name	same
2,3	3-SDDC1	3-SDDC1	Signature Dual Driver Controller (LRM)	Tested		
5	3-SSDC1	3-SSDC1	Signature Single Driver Controller (LRM)	Tested	sold under a different co. name, one less driver	same

Tested	Tested Ref.	GE Part #	Description	Difference From Tested Item (If Untested)		
					card	
2	3-TAMP	3-TAMP	Cabinet Tamper Switch	Tested		
2,5	3-ZA40A	3-ZA30A	30 Watt Zoned Amplifier, Class A, 25 or 70Vrms	Same Mass	Lower power output rating	same
2,5	3-ZA40A	3-ZA30B	30 Watt Zoned Amplifier, Class B, 25 or 70Vrms	same mass	Lower power output rating, one less output port	same
2,5	3-ZA40A	3-ZA40A	40 Watt Zoned Amplifier, Class A, 25 or 70Vrms	Tested		
2,5	3-ZA40A	3-ZA40B	40 Watt Zoned Amplifier, Class B, 25 or 70Vrms	same mass	one less output port	same
3	3-ZA95	3-ZA95	95 Watt Zoned Amplifier, 25 or 70Vrms	Tested		
9	405-8A-T	405-3A-T	Strobe	Same mass	strobe brightness	Same
9	405-8A-T	405-3A-TW	Strobe	Same mass	color and strobe brightness	Same
9	405-8A-T	405-5A-T	Strobe	Same mass	strobe brightness	Same
9	405-8A-T	405-5A-TW	Strobe	Same mass	color, and strobe brightness	Same
9	405-8A-T	405-6A-T	Strobe	Same mass	strobe brightness	Same
9	405-8A-T	405-6A-TW	Strobe	Same mass	color and strobe brightness	Same
9	405-8A-T	405-7A-T	Strobe	Same mass	strobe brightness	Same
9	405-8A-T	405-7A-TW	Strobe	Same mass	color and strobe	Same

Tested	Tested Ref.	GE Part #	Description	Difference From Tested Item (If Untested)		
					brightness	
9	405-8A-T	405-8A-T	Strobe, 110cd with 4 mounting screws	Tested		
9	405-8A-T	405-8A-TW	Strobe	Same mass	color	Same
10	439D-10AW	438D-10N5	Bell, Single Stroke	Same mass	Single Stroke	Same
10	439D-10AW	438D-10N5-R	Bell, Single Stroke	Same mass	Single Stroke and color	Same
10	439D-10AW	438D-6N5	Bell, Single Stroke	Lighter by 20%	Smaller gong and 120v not 24v	Same
10	439D-10AW	438D-6N5-R	Bell, Single Stroke	Lighter by 20%	Smaller gong, color and 120v not 24v	Same
10	439D-10AW	438D-8N5-R	Bell, Single Stroke	Lighter by 10%	Smaller gong, color and 120v not 24v	Same
10	439D-10AW	439D-10AW	Bell, 10 inch gong	Tested		
10	439D-10AW	439D-10AW-R	Bell, 10 inch, red	Same mass	color	Same
10	439D-10AW	439D-6AW	Bell, 6 inch	Lighter by 20%	Smaller gong	Same
10	439D-10AW	439D-6AW-R	Bell, 6 inch red	Lighter by 20%	Smaller gong and color	Same
10	439D-10AW	439D-8AW	Bell, 8 inch	Lighter by 10%	Smaller gong	Same
10	439D-10AW	439D-8AW-R	Bell, 8 inch red	Lighter by 10%	Smaller gong and color	Same
57	702U	701U	Detector base, Depopulated hardware version of the 702RU, different functional feature set	same	different operation	same
11	702RU	702RE	Detector base, Depopulated hardware version of the 702RU, different functional	same	different operation	same

Tested	Tested Ref.	GE Part #	Description	Difference From Tested Item (If Untested)		
			feature set			
11	702RU	702RU	700-Series, detector base, 6 terminals for 731, 6 inch	Tested		
56	702U	702U	700-Series, detector base, 6 terminals for all, 6 inch	Tested		
57	706U3A	706U1A	Remote LED, Depopulated hardware version of the 706U3A, different functional feature set	same	different operation	same
57	706U3A	706U2A	Remote LED, Depopulated hardware version of the 706U3A, different functional feature set	same	different operation	same
57	706U3A	706U3A	Remote LED, Test, Reset	Tested		
11	731U	711U	Photoelectric sensor, Depopulated hardware version of the 731U, different functional feature set	same	different operation	same
11	731U	713-5U	Photoelectric sensor, Depopulated hardware version of the 731U, different functional feature set	same	different operation	same
11	731U	721U	Photoelectric sensor, Depopulated hardware version of the 731U, different functional feature set	same	different operation	same
11	731U	721UD	Photoelectric sensor, Depopulated hardware version of the 731U, different functional feature set	same	different operation	same
11	731U	731U	Multi sensor Relay, 700-Series, 2-wire, Photo, Multi Algorithm	Tested		
11	731U	TS7-2	Photoelectric sensor, Depopulated hardware version of the 731U, different	same	different operation	same

Tested	Tested Ref.	GE Part #	Description	Difference From Tested Item (If Untested)		
			functional feature set			
11	731U	TS7-2R	Photoelectric sensor, Depopulated hardware version of the 731U, different functional feature set	same	different operation	same
56	741UT	711UT	Multi-sensor, Depopulated hardware version of the 741UT, different functional feature set	same	different operation	same
56	741UT	721UT	Multi-sensor, Depopulated hardware version of the 741UT, different functional feature set	same	different operation	same
56	741UT	741U	Multi-sensor, Depopulated hardware version of the 741UT, different functional feature set	same	different operation	same
56	741UT	741UT	Multi Sensor, 700-Series, 4-wire, Photo, Heat	Tested		
56	741UT	TS7-2T	Multi-sensor, Depopulated hardware version of the 741UT, different functional feature set	same	different operation	same
56	741UT	TS7-4	Multi-sensor, Depopulated hardware version of the 741UT, different functional feature set	same	different operation	same
56	741UT	TS7-4T	Multi-sensor, Depopulated hardware version of the 741UT, different functional feature set	same	different operation	same
12	757-8A-RS70	757-1A-R25W	Speaker	Lighter by 10%	No strobe, 25 volt in place of 70 volt speaker and color	Same

Tested	Tested Ref.	GE Part #	Description	Difference From Tested Item (If Untested)		
12	757-8A-RS70	757-1A-R70	Speaker	Lighter by 10%	No strobe	Same
12	757-8A-RS70	757-1A-R70W	Speaker	Lighter by 10%	No strobe, and color	Same
12	757-8A-RS70	757-3A-RS25	Reentrant Speaker/Strobe	Same mass	25 volt in place of 70 volt speaker and strobe brightness	Same
12	757-8A-RS70	757-3A-RS25W	Reentrant Speaker/Strobe	Same mass	25 volt in place of 70 volt speaker and strobe brightness	Same
12	757-8A-RS70	757-3A-RS70	Reentrant Speaker/Strobe	Same mass	strobe brightness	Same
12	757-8A-RS70	757-3A-RS70W	Reentrant Speaker/Strobe	Same mass	color and strobe brightness	Same
12	757-8A-RS70	757-7A-RS25	Reentrant Speaker/Strobe	Same mass	25 volt in place of 70 volt speaker and strobe brightness	Same
12	757-8A-RS70	757-7A-RS25W	Reentrant Speaker/Strobe	Same mass	color, 25 volt in place of 70 volt speaker and strobe brightness	Same
12	757-8A-RS70	757-7A-RS70	Reentrant Speaker/Strobe	Same mass	strobe brightness	Same
12	757-8A-RS70	757-7A-RS70W	Reentrant Speaker/Strobe	Same mass	color and strobe brightness	Same
12	757-8A-RS70	757-8A-RS25	Reentrant Speaker/Strobe	Same mass	25 volt in place of 70 volt speaker	Same

Tested	Tested Ref.	GE Part #	Description	Difference From Tested Item (If Untested)		
12	757-8A-RS70	757-8A-RS25W	Reentrant Speaker/Strobe	Same mass	25 volt in place of 70 volt speaker and color	Same
12	757-8A-RS70	757-8A-RS70	Speaker/Strobe, Wall	Tested		
12	757-8A-RS70	757-8A-RS70W	Reentrant Speaker/Strobe	Same mass	color	Same
13	757-8A-SS70	757-1A-S25	Speaker	Lighter by 10%	No strobe, 25 volt in place of 70 volt speaker and color	Same
13	757-8A-SS70	757-1A-S25W	Speaker	Lighter by 10%	No strobe, 25 volt in place of 70 volt speaker and color	Same
13	757-8A-SS70	757-1A-S70	Speaker	Lighter by 10%	No strobe, and strobe brightness	Same
13	757-8A-SS70	757-1A-S70W	Speaker	Lighter by 10%	No strobe,strobe brightness and color	Same
13	757-8A-SS70	757-3A-SS25	Speaker/Strobe	Same mass	25 volt in place of 70 volt speaker and strobe brightness	Same
13	757-8A-SS70	757-3A-SS25W	Speaker/Strobe	Same mass	color, 25 volt in place of 70 volt speaker and strobe brightness	Same
13	757-8A-SS70	757-3A-SS70	Speaker/Strobe	Same mass	strobe brightness	Same

Tested	Tested Ref.	GE Part #	Description	Difference From Tested Item (If Untested)		
13	757-8A-SS70	757-3A-SS70W	Speaker/Strobe	Same mass	color and strobe brightness	Same
13	757-8A-SS70	757-5A-SS25	Speaker/Strobe	Same mass	25 volt in place of 70 volt speaker and strobe brightness	Same
13	757-8A-SS70	757-5A-SS25W	Speaker/Strobe	Same mass	color, 25 volt in place of 70 volt speaker and strobe brightness	Same
13	757-8A-SS70	757-5A-SS70	Speaker/Strobe	Same mass	strobe brightness	Same
13	757-8A-SS70	757-5A-SS70W	Speaker/Strobe	Same mass	color, and strobe brightness	Same
13	757-8A-SS70	757-7A-SS25	Speaker/Strobe	Same mass	25 volt in place of 70 volt speaker and strobe brightness	Same
13	757-8A-SS70	757-7A-SS25W	Speaker/Strobe	Same mass	color, 25 volt in place of 70 volt speaker and strobe brightness	Same
13	757-8A-SS70	757-7A-SS70	Speaker/Strobe	Same mass	strobe brightness	Same
13	757-8A-SS70	757-7A-SS70W	Speaker/Strobe	Same mass	color, and strobe brightness	Same
13	757-8A-SS70	757-8A-SS25	Speaker/Strobe	Same mass	25 volt in place of 70 volt speaker	Same

Tested	Tested Ref.	GE Part #	Description	Difference From Tested Item (If Untested)		
13	757-8A-SS70	757-8A-SS25W	Speaker/Strobe	Same mass	25 volt in place of 70 volt speaker and color	Same
13	757-8A-SS70	757-8A-SS70	Speaker/Strobe, Wall	Tested		
13	757-8A-SS70	757-8A-SS70W	Speaker/Strobe	Same mass	color	Same
12	757A-WB	757A-WB	Backbox for 757-Series	Tested		
12	757A-WB	757A-WBW	Accessory, Backbox for 757-series, white	Same mass	color	Same
14	965-8A-4RW	964-1A-4RR	Speaker	Lighter by 10%	No strobe, and color	Same
14	965-8A-4RW	964-1A-4RW	Speaker	Lighter by 10%	No strobe	Same
14	965-8A-4RW	964-3A-4RW	Speaker/Strobe	Same mass	25 volt in place of 70 volt speaker and strobe brightness	Same
14	965-8A-4RW	964-5A-4RW	Speaker/Strobe	Same mass	25 volt in place of 70 volt speaker and strobe brightness	Same
14	965-8A-4RW	964-7A-4RW	Speaker/Strobe	Same mass	25 volt in place of 70 volt speaker and strobe brightness	Same
14	965-8A-4RW	964-8A-4RW	Speaker/Strobe	Same mass	25 volt in place of 70 volt speaker and strobe brightness	Same
14	965-8A-4RW	965-1A-4RR	Speaker	Lighter by 10%	No strobe	Same

Tested	Tested Ref.	GE Part #	Description	Difference From Tested Item (If Untested)		
14	965-8A-4RW	965-1A-4RW	Speaker	Lighter by 10%	No strobe, and color	Same
14	965-8A-4RW	965-3A-4RW	Speaker/Strobe	Same mass	strobe brightness	Same
14	965-8A-4RW	965-5A-4RW	Speaker/Strobe	Same mass	strobe brightness	Same
14	965-8A-4RW	965-7A-4RW	Speaker/Strobe	Same mass	strobe brightness	Same
14	965-8A-4RW	965-8A-4RR	Speaker/Strobe	Same mass	color	Same
14	965-8A-4RW	965-8A-4RW	Speaker/Strobe, 70V, 4 inch	Tested		
15	965-1A-8RW	964-1A-8RW	Speaker	Same mass	25 volt in place of 70 volt speaker	Same
15	965-1A-8RW	964-1A-8SW	Speaker	Same mass	26 volt in place of 70 volt speaker and color	Same
15	965-1A-8RW	964-3A-8RW	Speaker/Strobe	4% heavier	25 volt in place of 70 volt speaker and strobe added	Same
15	965-1A-8RW	964-7A-8RW	Speaker/Strobe	4% heavier	25 volt in place of 70 volt speaker and strobe added	Same
15	965-1A-8RW	964-7A-8SW	Speaker/Strobe	4% heavier	25 volt in place of 70 volt speaker, color and strobe added	Same
15	965-1A-8RW	965-1A-8RW	Speaker	Tested	No strobe	Same
15	965-1A-8RW	965-3A-8RW	Speaker/Strobe	4% heavier	strobe added	Same

Tested	Tested Ref.	GE Part #	Description	Difference From Tested Item (If Untested)		
15	965-1A-8RW	965-5A-8RW	Speaker/Strobe	4% heavier	color and strobe added	Same
15	965-1A-8RW	965-7A-8RW	Speaker/Strobe	4% heavier	strobe added	Same
15	965-1A-8RW	965-8A-8RW	Speaker/Strobe, 70V, 8 inch	4% heavier	strobe added	
16	965-5A-8SW	965-1A-8SW	Speaker	Lighter by 10%	No strobe	Same
16	965-5A-8SW	965-8A-8SW	Speaker/Strobe, 70V, 8 inch	Tested		
17	APS10A	APS10A	Remote Auxiliary/Booster Power Supply, 10A, 120Vac, Red	Tested		
17	APS10A	APS6A	Remote Auxiliary/Booster Power Supply, 10A, 120Vac, Red	10% less mass	current capacity	same
18	BC-1	BC-1	Battery Cabinet	Tested		
19	BPS10A	BPS10A	Remote Booster Power Supply, 10A, 120Vac, Red	Tested		
19	BPS10A	BPS6A	Remote Booster Power Supply, 10A, 120Vac, Red	10% less mass	current capacity	same
19	BPS10A	BPS6A/230	Remote Booster Power Supply, 6A, 230Vac, Red	10% less mass	current capacity, Input Rating	same
19	BPS10A	BPS10A/230	Remote Booster Power Supply, 10A, 230Vac, Red	Same	Input Rating	Same
19	BPS10A	BPS6CAA	Remote Booster Power Supply, 6A, 120Vac, Red, California Model	10% less mass	current capacity, Input Rating, firmware	same
19	BPS10A	BPS10CAA	Remote Booster Power Supply, 10A, 120Vac, Red, California Model	Same	Input Rating, firmware	Same
19	BPS10A	MIRBPS6A	Remote Booster Power Supply, 6A, 120Vac, Red	10% less mass	current capacity, Branding	same

Tested	Tested Ref.	GE Part #	Description	Difference From Tested Item (If Untested)		
19	BPS10A	MIRBPS6A/230	Remote Booster Power Supply, 6A, 230Vac, Red	10% less mass	current capacity, Input Rating, Branding	same
19	BPS10A	MIRBPS10A	Remote Booster Power Supply, 10A, 120Vac, Red	Same	Branding	Same
19	BPS10A	MIRBPS10A/230	Remote Booster Power Supply, 10A, 230Vac, Red	Same	Input Rating, Branding	Same
19	BPS10A	XLS-BPS6A/230	Remote Booster Power Supply, 6A, 230Vac, Red	10% less mass	current capacity, Input Rating, Branding	same
19	BPS10A	XLS-BPS10A/230	Remote Booster Power Supply, 10A, 230Vac, Red	Same	Branding, Input Rating	Same
19	BPS10A	EBPS6A	Remote Booster Power Supply, 6A, 120Vac, Red	10% less mass	current capacity, Branding	same
19	BPS10A	EBPS6A/230	Remote Booster Power Supply, 6A, 230Vac, Red	10% less mass	current capacity, Input Rating, Branding	same
19	BPS10A	EBPS10A	Remote Booster Power Supply, 10A, 120Vac, Red	Same	Branding	Same
19	BPS10A	EBPS10A/230	Remote Booster Power Supply, 10A, 230Vac, Red	Same	Branding, Input Rating	Same
19	BPS10A	ZBPS6A	Remote Booster Power Supply, 6A, 120Vac, Red	10% less mass	current capacity, Branding	same
19	BPS10A	ZBPS6A/230	Remote Booster Power Supply, 6A, 230Vac, Red	10% less mass	current capacity, Input Rating, Branding	same
19	BPS10A	ZBPS10A	Remote Booster Power Supply, 10A, 120Vac, Red	Same	Branding	Same

Tested	Tested Ref.	GE Part #	Description	Difference From Tested Item (If Untested)		
19	BPS10A	ZBPS10A/230	Remote Booster Power Supply, 10A, 230Vac, Red	Same	Branding, Input Rating	Same
22	G1F-CVM	G1-C	Chime	Lighter by 20%	No strobe circuit	Same
22	G1F-CVM	G1-CVM	Chime/Strobe	Same mass	text	Same
22	G1F-CVM	G1F-C	Chime	Lighter by 20%	No strobe circuit and text	Same
22	G1F-CVM	G1F-CVM	Chime/Strobe, single gang, wall	Tested		
22	G1F-CVM	G1R-C	Chime	Lighter by 20%	No strobe circuit and color	Same
22	G1F-CVM	G1R-CVM	Chime/Strobe	Same mass	color	Same
22	G1F-CVM	G1RF-C	Chime	Lighter by 20%	No strobe circuit and text, color	Same
22	G1F-CVM	G1RF-CVM	Chime/Strobe	Same mass	text and, color	Same
23	G1F-HDVM	EG1F-HDVM	Horn/Strobe (OVP Branding)	Same mass	sold under a different co. name	Same
23	G1F-HDVM	G1F-HD	Horn	Lighter by 20%	No strobe circuit and text	Same
23	G1F-HDVM	G1F-HDV1575	Horn/Strobe	Same mass	strobe brightness	Same
23	G1F-HDVM	G1F-HDVM	Horn/Strobe, single gang, wall	Tested		
23	G1F-HDVM	G1F-V1575	Strobe	Lighter by 30%	No horn circuit and strobe brightness	Same
23	G1F-HDVM	G1F-VM	Strobe	Lighter by 30%	No horn	Same

Tested	Tested Ref.	GE Part #	Description	Difference From Tested Item (If Untested)		
					circuit	
23	G1F-HDVM	G1-HD	Horn	Lighter by 20%	No strobe circuit	Same
23	G1F-HDVM	G1-HDVM	Horn/Strobe	Same mass	text	Same
23	G1F-HDVM	G1RF-HD	Horn	Lighter by 20%	No strobe circuit and text, color	Same
23	G1F-HDVM	G1RF-HDV1575	Horn/Strobe	Same mass	strobe brightness and, color	Same
23	G1F-HDVM	G1RF-HDVM	Horn/Strobe	Same mass	text and, color	Same
23	G1F-HDVM	G1RF-HDVM-LG	Horn/Strobe (OVP Branding)	Same mass	sold under a different co. name	Same
23	G1F-HDVM	G1RF-V1575	Strobe	Lighter by 30%	No horn circuit, color and strobe brightness	Same
23	G1F-HDVM	G1RF-VM	Strobe	Lighter by 30%	No horn circuit, text and color	Same
23	G1F-HDVM	G1R-HD	Horn	Lighter by 20%	No strobe circuit and color	Same
23	G1F-HDVM	G1R-HDVM	Horn/Strobe	Same mass	color	Same
23	G1F-HDVM	G1R-VM	Strobe	Lighter by 30%	No horn circuit and color	Same
23	G1F-HDVM	G1-VM	Strobe	Lighter by 30%	No horn circuit and text	Same
23	G1F-HDVM	G1-VM-A	Strobe	Lighter by 30%	No horn circuit and	Same

Tested	Tested Ref.	GE Part #	Description	Difference From Tested Item (If Untested)		
					text	
23	G1F-HDVM	MG1F-HDVM	Horn/Strobe (OVP Branding)	Same mass	sold under a different co. name	Same
22	G1M	G1M	Sync module for back of G1 Series Strobes	Tested		
24	G1M-RM	G1M-RM	Sync module for remote G1 Series Strobes	Tested		
22	G1T	G1RT	Trim Ring for G1 Series	Same mass	color	Same
22	G1T	G1RT-FIRE	Trim Ring for G1 Series	Same mass	text and, color	Same
22	G1T	G1RT-LG	Trim Ring (OVP Branding)	Same mass	sold under a different co. name	Same
22	G1T	G1T	Trim Ring for G1 Series	Tested		
22	G1T	G1T-FIRE	Trim Ring for G1 Series	Same mass	text	Same
22	G1T	G1T-FIRE-LG	Trim Ring (OVP Branding)	Same mass	sold under a different co. name	Same
25	G4EWA-A	G4ERA-A	Dual Strobe	Same mass	color	Same
25	G4EWA-A	G4ERN-A	Dual Strobe	Same mass	color	Same
25	G4EWA-A	G4EWA-A	Dual Strobe when combined with standard G4	Tested		
25	G4EWA-A	G4EWF-C	Dual Strobe	Same mass	color	Same
25	G4EWA-A	G4EWN-A	Dual Strobe	Same mass	color	Same
25	G4EWB	G4B	Speaker/Strobe, Backbox	30% less mass	signal strobe back box 1/2 in shorter	same
25	G4EWB	G4ERB	Dual Strobe, Backbox	Same mass	color	Same
25	G4EWB	G4EWB	Dual Strobe, Backbox	Tested		

Tested	Tested Ref.	GE Part #	Description	Difference From Tested Item (If Untested)		
25	G4EWB	G4RB	Speaker/Strobe, Backbox	30% less mass	signal strobe back box 1/2 in shorter and color	same
25	G4EWB	G4RB-LG	Dual Strobe, Backbox (OVP Branding)	Same mass	sold under a different co. name	Same
25	G4F-S7VM	G4F-S2	Speaker	Lighter by 10%	No strobe circuit	Same
25	G4F-S7VM	G4F-S2V1575	Speaker/Strobe	Same mass	strobe brightness	Same
25	G4F-S7VM	G4F-S2VM	Speaker/Strobe	Same mass	strobe brightness	Same
25	G4F-S7VM	G4F-S7	Speaker	Lighter by 10%	No strobe circuit and color	Same
25	G4F-S7VM	G4F-S7V1575	Speaker/Strobe	Same mass	strobe brightness	Same
25	G4F-S7VM	G4F-S7VM	Speaker/Strobe, 70V,	Tested		
25	G4F-S7VM	G4RF-S2	Speaker	Lighter by 10%	No strobe circuit and color	Same
25	G4F-S7VM	G4RF-S2V1575	Speaker/Strobe	Same mass	color and strobe brightness	Same
25	G4F-S7VM	G4RF-S2VM	Speaker/Strobe	Same mass	color and strobe brightness	Same
25	G4F-S7VM	G4RF-S2VM-LG	Speaker/Strobe (OVP Branding)	Same mass	sold under a different co. name	Same
25	G4F-S7VM	G4RF-S7	Speaker	Lighter by 10%	No strobe circuit and color	Same

Tested	Tested Ref.	GE Part #	Description	Difference From Tested Item (If Untested)		
25	G4F-S7VM	G4RF-S7V1575	Speaker/Strobe	Same mass	color and strobe brightness	Same
25	G4F-S7VM	G4RF-S7VM	Speaker/Strobe	Same mass	color and strobe brightness	Same
25	G4F-S7VM	G4R-S2	Speaker	Lighter by 10%	No strobe circuit	Same
25	G4F-S7VM	G4R-S2VM	Speaker/Strobe	Same mass	color, text and strobe brightness	Same
25	G4F-S7VM	G4R-S7	Speaker	Lighter by 10%	No strobe circuit, text and color	Same
25	G4F-S7VM	G4R-S7VM	Speaker/Strobe	Same mass	color, text and strobe brightness	Same
25	G4F-S7VM	G4-S2	Speaker	Lighter by 10%	No strobe circuit and text	Same
25	G4F-S7VM	G4-S2VM	Speaker/Strobe	Same mass	text and strobe brightness	Same
25	G4F-S7VM	G4-S2VMA	Speaker/Strobe	Same mass	text and strobe brightness	Same
25	G4F-S7VM	G4-S7	Speaker	Lighter by 10%	No strobe circuit and text	Same
25	G4F-S7VM	G4-S7VM	Speaker/Strobe	Same mass	text and strobe brightness	Same
25	G4F-S7VM	G4-S7VMA	Speaker/Strobe	Same mass	text and strobe brightness	Same

Tested	Tested Ref.	GE Part #	Description	Difference From Tested Item (If Untested)		
26	GCF-HDVMH	GCF-HDVM	Horn/Strobe	Same mass	strobe brightness	Same
26	GCF-HDVMH	GCF-HDVMH	Horn/Strobe, with 177cd, ceiling	Tested		
26	GCF-HDVMH	GCFR-HDVM	Horn/Strobe	Same mass	color and strobe brightness	Same
26	GCF-HDVMH	GCFR-VM	Strobe	Lighter by 10%	No horn circuit and text	Same
26	GCF-HDVMH	GCF-VM	Strobe	Lighter by 10%	No horn	Same
26	GCF-HDVMH	GCF-VMH	Strobe	Lighter by 10%	No horn circuit and strobe brightness	Same
26	GCF-HDVMH	GC-HDVM	Horn/Strobe	Same mass	text and strobe brightness	Same
26	GCF-HDVMH	GC-HDVMH	Horn/Strobe	Same mass	text	Same
26	GCF-HDVMH	GC-VM	Strobe	Lighter by 10%	No horn circuit and text	Same
26	GCF-HDVMH	GC-VMH	Strobe	Lighter by 10%	No horn circuit, strobe brightness and text	Same
27	GCF-S7VMH	GCFR-S7	Speaker	Lighter by 10%	No strobe	Same
27	GCF-S7VMH	GCFR-S7VM	Speaker/Strobe	Same mass	color and strobe brightness	Same
27	GCF-S7VMH	GCF-S2	Speaker	Lighter by 10%	No strobe	Same
27	GCF-S7VMH	GCF-S2VM	Speaker/Strobe	Same mass	text and strobe	Same

Tested	Tested Ref.	GE Part #	Description	Difference From Tested Item (If Untested)		
					brightness	
27	GCF-S7VMH	GCF-S2VMH	Speaker/Strobe	Same mass	text and strobe brightness	Same
27	GCF-S7VMH	GCF-S7	Speaker	Lighter by 10%	No strobe	Same
27	GCF-S7VMH	GCF-S7VM	Speaker/Strobe	Same mass	strobe brightness	Same
27	GCF-S7VMH	GCF-S7VMH	Speaker/Strobe, 70V, ceiling	Tested		
27	GCF-S7VMH	GC-S2	Speaker	Lighter by 10%	No strobe	Same
27	GCF-S7VMH	GC-S2VM	Speaker/Strobe	Same mass	text and strobe brightness	Same
27	GCF-S7VMH	GC-S2VMH	Speaker/Strobe	Same mass	text and strobe brightness	Same
27	GCF-S7VMH	GC-S7	Speaker	Lighter by 10%	No strobe	Same
27	GCF-S7VMH	GC-S7VM	Speaker/Strobe	Same mass	text and strobe brightness	Same
27	GCF-S7VMH	GC-S7VMH	Speaker/Strobe	Same mass	text and strobe brightness	Same
28	KPDISP	KPDISP	Key Pad Display	Tested		
29,54,55	MFC-A	MFC-A	Sheet metal mounting box- Tested containing SIGA-REL, SIGA-UIO6 or SIGA-UIO2R)	Tested		
3,5	MMXVR	MMXVR	Multimode plug-in Transceiver	Tested		
3,5	MMXVR	SMXHi	Single mode plug-in Transceiver- Long Range	5% less mass	communicates at a different frequency	same

Tested	Tested Ref.	GE Part #	Description	Difference From Tested Item (If Untested)		
3,5	MMXVR	SMXLO	Single mode plug-in Transceiver- Short Range	5% less mass	communicates at a different frequency	same
3,17	MN-ABPM	MN-ABPM	Audio Bridge - 25Vrms for MN-FVPN VoIP encoder/decoder	Tested		
3,17	MN-BRKT1	MN-BRKT1	Mounting Bracket for EST3 cabinet, 1 chassis space	Tested		
5	MN-COM1S	MN-COM1S	TCP/IP to RS232 Interface Module	Tested		
3,17	MN-FVPN	MN-FVPN	VoIP Unit, audio encoder/decoder	Tested		
3,17	MN-NETSW1	MN-NETSW1	10/100 Ethernet Network Switching Hub	Tested		
3,17	MN-PASM	MN-PASM	Pre-AMP Supervision Module	Tested		
30	MR104/C	MR104/C	Accessory relay with enclosure	Tested		
31	MR199X-13/C	MR199X-13/C	Relay with enclosure, 30A, DPDT, 24V Coil	Tested		
32	MR199X-14/C	MR199X-14/C	Relay with enclosure, 30A, DPDT, 120V Coil	Tested		
33	MR204/C	MR204/C	Accessory relay with enclosure	Tested		
34	PAM-1	PAM-1	accessory relay PAM	Tested		
35	RELA-ABT	RELA-ABT	Abort Switch	Tested		
36	RELA-EOL	RELA-EOL	Solenoid Releasing Module	Tested		
37	RELA-SRV	RELA-SRV	Service Disconnect	Tested		
38	SD-4WJ	ESD-4WJ	Duct mount smoke detector,OEM Branding, same as SD-4WJ, different functionality	same	sold under a different co. name	same

Tested	Tested Ref.	GE Part #	Description	Difference From Tested Item (If Untested)		
38	SD-4WJ	ESD-CJ	Duct mount smoke detector,OEM Branding, Controller only, part of SD-4WJ, different functionality	same	sold under a different co. name	same
38	SD-4WJ	ESD-CT	Duct mount smoke detector, OEM Branding, Controller only, part of SD-4WJ, different functionality, different functionality	same	sold under a different co. name	same
38	SD-4WJ	ESD-SJ	Duct mount smoke detector,OEM Branding, Sensor only, part of SD-4WJ, different functionality	same	sold under a different co. name	same
38	SD-4WJ	ESD-ST	Duct mount smoke detector,OEM Branding, Sensor only, part of SD-4WJ, different functionality	same	sold under a different co. name	same
38	SD-4WJ	GSA-SD	Duct mount smoke detector, OEM Branding, depopulated SD-4WJ, different functionality	same	sold under a different co. name	same
38	SD-4WJ	GSA-SDPCB	Duct mount smoke detector, OEM Branding, PCB only, incorporated in SD-4WJ, different functionality	same	sold under a different co. name	same
38	SD-4WJ	SD-2W	Duct mount smoke detector, 2 wire, depopulated SD-4WJ	same	different operation	same
38	SD-4WJ	SD-2WPCB	PCB only, incorporated in SD-4Wj		replacement part	
38	SD-4WJ	SD-4WJ	Duct mount smoke detector, 4 wire, max unit with AC supply	Tested		
38	SD-4WJ	SD-4WPCBJ	PCB only, incorporated in SD-4Wj		replacement part	
38	SD-4WJ	SD-4WPCBT	PCB only, incorporated in SD-4Wj		replacement part	

Tested	Tested Ref.	GE Part #	Description	Difference From Tested Item (If Untested)		
38	SD-4WJ	SD-CJ	Controller only, part of SD-4WJ		replacement part	
38	SD-4WJ	SD-CT	Controller only, part of SD-4WJ		replacement part	
38	SD-4WJ	SD-SJ	Sensor only, part of SD-4WJ		replacement part	
38	SD-4WJ	SD-ST	Sensor only, part of SD-4WJ		replacement part	
38	SD-4WJ	SIGA-SD	Duct mount smoke detector, SIGA version, depopulated SD-4WJ	same	different operation	same
38	SD-4WJ	SIGA-SDPCB	PCB only, incorporated in SD-4Wj		replacement part	
38	SD-4WJ	TSD-4WJ-C01	Duct mount smoke detector, OEM Branding, same as SD-4WJ, different functionality	same	sold under a different co. name	same
38	SD-4WJ	TSD-4WJ-C02	Duct mount smoke detector, OEM Branding, same as SD-4WJ, different functionality	same	sold under a different co. name	same
38	SD-4WJ	TSD-CJ	OEM Branding, Controller only, part of SD-4WJ, different functionality	same	sold under a different co. name	same
38	SD-4WJ	TSD-CJ24	OEM Branding, Controller only, part of SD-4WJ, different functionality	same	sold under a different co. name	same
38	SD-4WJ	TSD-CJ-C01	OEM Branding, Controller only, part of SD-4WJ, different functionality	same	sold under a different co. name	same
38	SD-4WJ	TSD-CJ-C02	OEM Branding, Controller only, part of SD-4WJ, different functionality	same	sold under a different co. name	same
38	SD-4WJ	TSD-CT24	OEM Branding, Controller only, part of SD-4WJ, different functionality	same	sold under a different co. name	same

Tested	Tested Ref.	GE Part #	Description	Difference From Tested Item (If Untested)		
38	SD-4WJ	TSD-SJ	OEM Branding, Sensor only, part of SD-4WJ, different functionality	same	sold under a different co. name	same
38	SD-4WJ	TSD-SJ-C01	OEM Branding, Sensor only, part of SD-4WJ, different functionality	same	sold under a different co. name	same
38	SD-4WJ	XLS-SD	Duct mount smoke detector, OEM Branding, SIGA version, depopulated SD-4WJ, different functionality	same	sold under a different co. name	same
38	SD-4WJ	XLS-SDPCB	Duct mount smoke detector, OEM Branding, PCB only, incorporated in SD-4WJ, different functionality	same	sold under a different co. name	same
38,46	SD-T24	SD-T120	Sample Tubes	5 times heavier	longer	same
38,46	SD-T24	SD-T18	Sample Tubes	25% less weight	shorter	same
38,46	SD-T24	SD-T24	Sample Tubes	Tested		
38,46	SD-T24	SD-T36	Sample Tubes	1.5 times heavier	longer	same
38,46	SD-T24	SD-T42	Sample Tubes	1.75 times heavier	longer	same
38,46	SD-T24	SD-T60	Sample Tubes	2.5 times heavier	longer	same
38,46	SD-T24	SD-T78	Sample Tubes	3.25 times heavier	longer	same
38,46	SD-T24	SD-T8	Sample Tubes	75% less	shorter	same
39	SD-TRK4	SD-TRK	Test Station, for 2 wire and SIGA, same as SD-TRK4	same	different operation	same
39	SD-TRK4	SD-TRK4	Test Station, 4 wire	Tested		
40	SIGA-270P	270A-DPO	Pull Station, Depopulated SIGA-270P	10% less	Depopulated	same
40	SIGA-270P	270A-SPO	Pull Station, Depopulated SIGA-270P	10% less	Depopulated	same

Tested	Tested Ref.	GE Part #	Description	Difference From Tested Item (If Untested)		
40	SIGA-270P	270-DOC	Pull Station, Depopulated SIGA-270P	10% less	Depopulated	same
40	SIGA-270P	270-DPO	Pull Station, Depopulated SIGA-270P	10% less	Depopulated	same
40	SIGA-270P	270P-DPO	Pull Station, Depopulated SIGA-270P	10% less	Depopulated	same
40	SIGA-270P	270P-SPO	Pull Station, Depopulated SIGA-270P	10% less	Depopulated	same
40	SIGA-270P	270-SPO	Pull Station, Depopulated SIGA-270P	10% less	Depopulated	same
40	SIGA-270P	ADT-270	Pull Station, OEM Branding, same hardware as SIGA-270, different functionality	same	sold under a different co. name, different operation	same
40	SIGA-270P	ADT-278	Pull Station, OEM Branding, same hardware as SIGA-270, different functionality	same	sold under a different co. name, different operation	same
40	SIGA-270P	GSA-M270	Pull Station, OEM Branding, same hardware as SIGA-270, different functionality	same	sold under a different co. name, different operation	same
40	SIGA-270P	GSA-M270P	Pull Station, OEM Branding, same hardware as SIGA-270, different functionality	same	sold under a different co. name, different operation	same
40	SIGA-270P	SIGA-270	Standard version, same hardware as SIGA-270P	same	different operation	same
40	SIGA-270P	SIGA-270L	Pull Station, Standard version, same hardware as SIGA-270P	same	different operation	same
40	SIGA-270P	SIGA-270P	Pull Station, Preaction, with	Tested		

Tested	Tested Ref.	GE Part #	Description	Difference From Tested Item (If Untested)		
			SIGA module attached			
40	SIGA-270P	XLS-270	Pull Station, OEM Branding, same hardware as SIGA-270, different functionality	same	sold under a different co. name, different operation	same
40	SIGA-270P	XLS-270P	Pull Station, OEM Branding, same hardware as SIGA-270, different functionality	same	sold under a different co. name, different operation	same
41	SIGA-278	276B-1110	Pull Station, Depopulated SIGA-278	10% less	Depopulated	same
41	SIGA-278	276B-1120	Pull Station, Depopulated SIGA-279	10% less	Depopulated	same
41	SIGA-278	276B-1320	Pull Station, Depopulated SIGA-280	10% less	Depopulated	same
41	SIGA-278	276B-1420	Pull Station, Depopulated SIGA-281	10% less	Depopulated	same
41	SIGA-278	277B-1110	Pull Station, Depopulated SIGA-282	10% less	Depopulated	same
41	SIGA-278	277B-1120	Pull Station, Depopulated SIGA-283	10% less	Depopulated	same
41	SIGA-278	278B-1110	Pull Station, Depopulated SIGA-284	10% less	Depopulated	same
41	SIGA-278	278B-1120	Pull Station, Depopulated SIGA-285	10% less	Depopulated	same
41	SIGA-278	278B-1320	Pull Station, Depopulated SIGA-286	10% less	Depopulated	same
41	SIGA-278	278B-1420	Pull Station, Depopulated SIGA-287	10% less	Depopulated	same
41	SIGA-278	278B-2320	Pull Station, Depopulated SIGA-288	10% less	Depopulated	same

Tested	Tested Ref.	GE Part #	Description	Difference From Tested Item (If Untested)		
41	SIGA-278	279B-1110	Pull Station, Depopulated SIGA-289	10% less	Depopulated	same
41	SIGA-278	279B-1120	Pull Station, Depopulated SIGA-290	10% less	Depopulated	same
41	SIGA-278	279B-1320	Pull Station, Depopulated SIGA-291	10% less	Depopulated	same
41	SIGA-278	279M-1110	Pull Station, Depopulated SIGA-292	10% less	Depopulated	same
41	SIGA-278	GSA-M278	Pull Station, OEM Branding, same hardware as SIGA-278, different functionality	same	sold under a different co. name, different operation	same
41	SIGA-278	SIGA-278	Pull Station, Dual Action, with SIGA module attached	Tested		
41	SIGA-278	XLS-278	Pull Station, OEM Branding, same hardware as SIGA-278, different functionality	same	sold under a different co. name, different operation	same
42	SIGA-AB4G	SIGA-AB4G	Sounder base	Tested		
19	SIGA-CC2	GSA-CC1	Riser Output module, OEM Branding, same hardware as SIGA CC1, different functional feature set	5% less	sold under a different co. name, depopulated	same
19	SIGA-CC2	GSA-CC1S	Riser Output module, OEM Branding, same hardware as SIGA CC1, different functional feature set	5% less	sold under a different co. name, depopulated	same
19	SIGA-CC2	GSA-CC2	Riser Output module, OEM Branding, same hardware as SIGA CC2, different functional feature set	same	sold under a different co. name	same
19	SIGA-CC2	GSA-CR	Riser Output module, OEM Branding, same hardware as SIGA CR, different functional	same	sold under a different co. name,	same

Tested	Tested Ref.	GE Part #	Description	Difference From Tested Item (If Untested)		
			feature set		different operation	
19	SIGA-CC2	SIGA-CC1	Single Riser Output module, depopulated SIGA-CC2	5% less	depopulated	same
19	SIGA-CC2	SIGA-CC1S	Single Riser Output module, with Sync, depopulated SIGA-CC2	5% less	depopulated	same
19	SIGA-CC2	SIGA-CC2	Dual Riser Output module	Tested		
43	SIGA-CC2A	SIGA-CC2A	Dual Output class A	Tested		
44	SIGA-CR2	GSA-CRR	Relay, OEM Branding, same hardware as SIGA CRR, different functional feature set	same	sold under a different co. name, different operation	same
44	SIGA-CR2	SIGA-CR	Relay, same hardware as CR2 - different layout	same	PCB board layout	same
44	SIGA-CR2	SIGA-CR2	Relay	Tested		
44	SIGA-CR2	SIGA-CRR	Relay, same hardware as CR2 - different layout	same	PCB board layout	same
45	SIGA-CT2	GSA-CT1	OEM Branding, Single Input, depopulated SIGA-CT2, different functional feature set	same	sold under a different co. name, depopulated	same
45	SIGA-CT2	GSA-CT2	OEM Branding, Dual Input, same hardware as SIGA-CT2, different functional feature set	same	sold under a different co. name, different operation	same
45	SIGA-CT2	SIGA-CT1	Single Input, depopulated CT2	5% less	depopulated	same
45	SIGA-CT2	SIGA-CT2	Dual Signal Input Module	Tested		
45	SIGA-CT2	SIGA-MM1	Dual input pre programmed, same hardware as SIGA-CT2	same	software	same
45	SIGA-CT2	SIGA-WTM	Dual input pre programmed,	same	software	same

Tested	Tested Ref.	GE Part #	Description	Difference From Tested Item (If Untested)		
			same hardware as SIGA-CT2			
Attach. I	SIGA-DG	SIGA-DG	Detector Guard	Not Tested	See Attachment I for qualification justification.	
Attach. I	SIGA-DGMF	SIGA-DGMF	Mounting Flange	Not Tested		
Attach. I	SIGA-DGSB	SIGA-DGSB	Surface Box	Not Tested		
46	SIGA-DH	GSA-DH	Duct Housing (OEM Branding, same as hardware SIGA-DH, different functional feature set)	same	sold under a different co. name	same
46	SIGA-DH	SIGA-DH	Duct Housing	Tested		
53	SIGA-DMP	GSA-DMP	Duct mounting plate (Branding only, SIGA-DMP, different functional feature set)	same	sold under a different co. name	same
53	SIGA-DMP	SIGA-DMP	Mounting plate only for in duct applications	Tested		
47	SIGA-DTS	GSA-DTS	Test Station (Brand only, same as hardware SIGA-DTS, different functional feature set)	same	sold under a different co. name	same
47	SIGA-DTS	SIGA-DTS	Test Station	Tested		
52	SIGA-HFS	ADT-HFS	Heat Sensor (OEM Branding, hardware same as SIGA-HFS, different functional feature set)	same	sold under a different co. name	same
52	SIGA-HFS	ADT-HRS	Heat Sensor (OEM Branding, hardware same as SIGA-HFS, different functional feature set)	same	sold under a different co. name	same
52	SIGA-HFS	GSA-HFS	Heat Sensor (OEM Branding, hardware same as SIGA-HFS, different functional feature set)	same	sold under a different co. name	same
52	SIGA-HFS	GSA-HRS	Heat Sensor (OEM Branding, hardware same as SIGA-HFS,	same	sold under a different co.	same

Tested	Tested Ref.	GE Part #	Description	Difference From Tested Item (If Untested)		
			different functional feature set)		name	
52	SIGA-HFS	SIGA-HFS	Heat Sensor	Tested		
52	SIGA-HFS	SIGA-HRS	Heat Sensor (Hardware same as SIGA-HFS, different functional feature set)	same	software	same
52	SIGA-HFS	XLS-HFS	Heat Sensor (OEM Branding, hardware same as SIGA-HFS, different functional feature set)	same	sold under a different co. name	same
52	SIGA-HFS	XLS-HRS	Heat Sensor (OEM Branding, hardware same as SIGA-HFS, different functional feature set)	same	sold under a different co. name	same
48	SIGA-IB4	SIGA-IB4	Isolator Base, w/ Flange	Tested		
49	SIGA-IM	GSA-IM	Isolator (OEM Branding, same hardware as SIGA-IM, different functional feature set)	same	sold under a different co. name, different operation	same
49	SIGA-IM	SIGA-IM	Isolator	Tested		
49	SIGA-IM	XLS-IM	Isolator (OEM Branding, same hardware as SIGA-IM, different functional feature set)	same	sold under a different co. name, different operation	same
50	SIGA-IO	SIGA-IO	Input/output	Tested		
42,46	SIGA-IPHS	ADT-IPHS	Multi Sensor (OEM Branding, depopulated hardware version of the SIGA-IPHS, different functional feature set)	same	sold under a different co. name	same
42,46	SIGA-IPHS	ADT-PHS	Multi Sensor (OEM Branding, depopulated hardware version of the SIGA-IPHS, different functional feature	same	sold under a different co. name	same

Tested	Tested Ref.	GE Part #	Description	Difference From Tested Item (If Untested)		
			set)			
42,46	SIGA-IPHS	ADT-PS	Multi Sensor (OEM Branding, depopulated hardware version of the SIGA-IPHS, different functional feature set)	same	sold under a different co. name	same
42,46	SIGA-IPHS	GSA-IPHS	Multi Sensor (OEM Branding, depopulated hardware version of the SIGA-IPHS, different functional feature set)	same	sold under a different co. name	same
42,46	SIGA-IPHS	GSA-PHS	Multi Sensor (OEM Branding, depopulated hardware version of the SIGA-IPHS, different functional feature set)	same	sold under a different co. name	same
42,46	SIGA-IPHS	GSA-PS	Multi Sensor (OEM Branding, depopulated hardware version of the SIGA-IPHS, different functional feature set)	same	sold under a different co. name	same
42,46	SIGA-IPHS	SIGA-IPHS	Multi-sensor	Tested		
42,46	SIGA-IPHS	SIGA-IPHSB	Multi-Sensor (Same as SIGA-IPHS but in Black)	same	color	same
42,46	SIGA-IPHS	SIGA-PHS	Multi Sensor (depopulated hardware version of the SIGA-IPHS, different functional feature set)	same	software	same
42,46	SIGA-IPHS	SIGA-PS	Photoelectric Sensor (Depopulated hardware version of the SIGA-IPHS, different functional feature set)	same	software	same
42,46	SIGA-IPHS	XLS-IPHS	Multi Sensor (OEM Branding, depopulated hardware version of the SIGA-IPHS, different functional feature	same	sold under a different co. name	same

Tested	Tested Ref.	GE Part #	Description	Difference From Tested Item (If Untested)		
			set)			
42,46	SIGA-IPHS	XLS-PHS	Multi Sensor (OEM Branding, depopulated hardware version of the SIGA-IPHS, different functional feature set)	same	sold under a different co. name	same
42,46	SIGA-IPHS	XLS-PS	Photoelectric Sensor (OEM Branding, Depopulated hardware version of the SIGA-IPHS, different functional feature set)	same	sold under a different co. name	same
48	SIGA-IS	ADT-IS	Ion sensor (OEM Branding, hardware same as SIGA-IS, different functional feature set)	same	sold under a different co. name	same
48	SIGA-IS	GSA-IS	Ion sensor (OEM Branding, hardware same as SIGA-IS, different functional feature set)	same	sold under a different co. name	same
48	SIGA-IS	SIGA-IS	Ion Sensor	Tested		
48	SIGA-IS	XLS-IS	Ion sensor (OEM Branding, hardware same as SIGA-IS, different functional feature set)	same	sold under a different co. name	same
51	SIGA-LED	GSA-LED	Remote LED (OEM Branding, same as SIGA-LED, different functional feature set)	same	sold under a different co. name, different operation	same
51	SIGA-LED	SIGA-LED	Remote LED for connection to SIGA Bases	Tested		
55	SIGA-MAB	GSA-MAB	OEM Branding, same hardware as SIGA-MAB, different functional feature set	same	sold under a different co. name, different operation	same

Tested	Tested Ref.	GE Part #	Description	Difference From Tested Item (If Untested)		
55	SIGA-MAB	SIGA-MAB	Universal input or output module	Tested		
55	SIGA-MCC2	GSA-MCC1	OEM Branding, same hardware as SIGA-MCC1, different functional feature set	10% less	sold under a different co. name, different operation	same
55	SIGA-MCC2	GSA-MCC2	OEM Branding, same hardware as SIGA-MCC2, different functional feature set	same	sold under a different co. name, different operation	same
55	SIGA-MCC2	SIGA-MCC1	Single output, depopulated MCC2	same	depopulated	same
55	SIGA-MCC2	SIGA-MCC1S	Single output, with Sync, same as MCC1	same	depopulated	same
55	SIGA-MCC2	SIGA-MCC2	Dual Riser Output Module	Tested		
54	SIGA-MCC2A	SIGA-MCC2A	Dual Riser Output Module class A	Tested		
55	SIGA-MCR	GSA-MCR	Relay (OEM Branding, same hardware as SIGA-MCR, different functional feature set)	same	sold under a different co. name, different operation	same
55	SIGA-MCR	GSA-MCRR	Relay (OEM Branding, same hardware as SIGA-MCRR, different functional feature set)	same	sold under a different co. name, different operation	same
55	SIGA-MCR	SIGA-MCR	Relay	Tested		
55	SIGA-MCR	SIGA-MCRR	Relay (same components as SIGA-MCR, different layout)	same	PCB layout	same
55	SIGA-MCT2	GSA-MCT2	Dual input, OEM Branding, same hardware as SIGA-MCT2, different functional	same	sold under a different co. name	same

Tested	Tested Ref.	GE Part #	Description	Difference From Tested Item (If Untested)		
			feature set			
55	SIGA-MCT2	GSA-MM1	Dual input, OEM Branding, same hardware as SIGA-MM1, different functional feature set	same	sold under a different co. name, different operation	same
55	SIGA-MCT2	SIGA-MCT2	Dual input pre programmed, same hardware as SIGA-CT2	Tested		
54	SIGA-MDM	GSA-MDM	Digital message module (OEM Branding, same hardware as SIGA-MDM, different functional feature set)	same	sold under a different co. name	same
54	SIGA-MDM	SIGA-MDM	Digital message module	Tested		
55	SIGA-MIO	SIGA-MIO	Input/output	Tested		
54	SIGA-MRM1	SIGA-MRM1	Riser monitor	Tested		
52	SIGA-RB4	GSA-IB	Isolator Base (OEM Branding, similar to SIGA-IB4, different functional feature set)	same	sold under a different co. name, different operation	same
52	SIGA-RB4	GSA-IB4	Isolator Base (OEM Branding, similar to SIGA-IB4, different functional feature set)	same	sold under a different co. name, different operation	same
52	SIGA-RB4	GSA-RB	Relay Base (OEM Branding, similar to SIGA-RB4, different functional feature set)	same	sold under a different co. name, different operation	same
52	SIGA-RB4	GSA-RB4	Relay Base (OEM Branding, similar to SIGA-RB4, different functional feature set)	same	sold under a different co. name, different operation	same

Tested	Tested Ref.	GE Part #	Description	Difference From Tested Item (If Untested)		
52	SIGA-RB4	GSA-SB	Standard Base w/ flange (OEM Branding, depopulated SIGA-RB4, different functional feature set)		replacement part	
52	SIGA-RB4	GSA-SB4	Standard Base w/ flange (OEM Branding, depopulated SIGA-RB4, different functional feature set)		replacement part	
52	SIGA-RB4	GSA-TS	Trim Skirt standard, OEM Branding, plastic only included in SIGA-RB4	same	sold under a different co. name	same
52	SIGA-RB4	GSA-TSB	Trim Skirt, OEM Branding, replacement, plastic only included in SIGA-RB4		replacement part	
52	SIGA-RB4	SIGA-IB	Isolator Base, similar to SIGA-IB4	5% less	different operation	same
52	SIGA-RB4	SIGA-RB	Relay base, similar to SIGA-RB4	10% less	without flange	same
52	SIGA-RB4	SIGA-RB4	Relay base, w/ Flange	Tested		
52	SIGA-RB4	SIGA-SB	Standard base, w/ Flange - depopulated SIGA-RB4	20% less	depopulated	same
52	SIGA-RB4	SIGA-SB4	Standard base, w/ Flange - depopulated SIGA-RB4	20% less	depopulated	same
52	SIGA-RB4	SIGA-TS	Trim Skirt standard, plastic only included in SIGA-RB4	Tested	replacement part	
52	SIGA-RB4	SIGA-TS4	Trim Skirt , replacement, plastic only included in SIGA-RB4		replacement part	
52	SIGA-RB4	SIGA-TSB	Trim Skirt , replacement Black, plastic only included in SIGA-RB4		replacement part	
52	SIGA-RB4	U SIGA-SB	Standard base, w/ Flange - depopulated SIGA-RB4	20% less	depopulated, without flange	same

Tested	Tested Ref.	GE Part #	Description	Difference From Tested Item (If Untested)		
42	SIGA-AB4G	GSA-AB4G	Sounder base, OEM Branding, same as SIGA-AB4G , different functional feature set	same	sold under a different co. name, different operation	same
29	SIGA-REL	GSA-REL	Releasing Module (OEM Branding, same hardware as SIGA-REL, different functional feature set)	same	sold under a different co. name	same
29	SIGA-REL	SIGA-REL	Releasing Module	Tested		
29	SIGA-REL	XLS-REL	Releasing Module (OEM Branding, same hardware as SIGA-REL, different functional feature set)	same	sold under a different co. name	same
3	SIGA-RM1	SIGA-RM1	Riser monitor	Tested		
54	SIGA-UIO2R	GSA-UIO2R	OEM Branding, same hardware as SIGA-UIO2R, different functional feature set	same	sold under a different co. name, same operation	same
55	SIGA-UIO6	GSA-UIO6	OEM Branding, same hardware as SIGA-UIO6, different functional feature set	same	sold under a different co. name, different operation	same
55	SIGA-UIO6	GSA-UIO6R	OEM Branding, same hardware as SIGA-UIO6R, different functional feature set	same	sold under a different co. name, different operation	same
54	SIGA-UIO2R	SIGA-UIO2R	two slot motherboard	Tested		
55	SIGA-UIO6	SIGA-UIO6	Six slot motherboard	Tested		
55	SIGA-UIO6	SIGA-UIO6R	Six slot motherboard, riser version, same components as SIGA-UI06, different layout	same	depopulated	same
19	SIGA-UM	GSA-UM	OEM Branding, same hardware as SIGA-UM,	same	sold under a different co.	same

Tested	Tested Ref.	GE Part #	Description	Difference From Tested Item (If Untested)		
			different functional feature set		name, different operation	
19	SIGA-UM	GSA-WTM	OEM Branding, same hardware as SIGA-UM, different functional feature set	same	sold under a different co. name, different operation	same
19	SIGA-UM	SIGA-UM	Universal input or output module	Tested		
3	3-SDC1	3-SDC1	Signature Data Card for Controller	Tested		
1	3-10ANN	XLS-10ANN	Annunciator /w CPU, 2 of 3-ANNSM, 6 of 3-ANNBF	same	sold under a different co. name	same
1	3-10ANN	ADT-10ANN	Annunciator /w CPU, 2 of 3-ANNSM, 6 of 3-ANNBF	same	sold under a different co. name	same
1	3-10ANN	3-6ANN	Annunciator /w CPU, 2 of 3-ANNSM, 2 of 3-ANNBF	10% less mass	mounts in shorter box fits 6 cards not 10	same
1	3-10ANN	XLS-6ANN	Annunciator /w CPU, 2 of 3-ANNSM, 2 of 3-ANNBF	10% less mass	sold under a different co. name - mounts in shorter box fits 6 cards not 10	same
1	3-10ANN	ADT-6ANN	Annunciator /w CPU, 2 of 3-ANNSM, 2 of 3-ANNBF	10% less mass	sold under a different co. name - mounts in shorter box fits 6 cards not 10	same

Tested	Tested Ref.	GE Part #	Description	Difference From Tested Item (If Untested)		
1	3-ANNCPU3 & 3-LCD	XLS-LCDANN	Remote LCD Command Module Annunciator of the 3-LCDANN is a combination of the 3-ANNCPU3, 3-LCD and doors.	same	sold under a different co. name	same
1	3-ANNCPU3 & 3-LCD	ADT-LDCANN	Remote LCD Command Module Annunciator of the 3-LCDANN is a combination of the 3-ANNCPU3, 3-LCD and doors.	same	sold under a different co. name	same
2	3-CAB14D	XLS-CAB14D	Door Assembly for XLS-CAB14	same	sold under a different co. name	same
2	3-CAB14D	ADT-CAB14D	Door Assembly for ADT-CAB14	same	sold under a different co. name	same
2	3-CAB14D	XLS-CAB7D	Door Assembly for XLS-CAB7	20% less mass	shorter box fits 7 cards not 14 sold under a different co. name	Same
2	3-CAB14D	XLS-CAB7D	Door Assembly for ADT-CAB7	20% less mass	shorter box fits 7 cards not 14 sold under a different co. name	Same
3	3-CAB21D	XLS-CAB21D	Door Assembly for XLS-CAB21	same	sold under a different co. name	same
3	3-CAB21D	ADT-CAB21D	Door Assembly for ADT-CAB21	same	sold under a different co. name	same
4	3-RCC14B and 3-RCC14D	3-RCC14R	Back Box /w 7 LRM Space and door	same	same	Same

Tested	Tested Ref.	GE Part #	Description	Difference From Tested Item (If Untested)		
4	3-RCC14B and 3-RCC14D	XLS-RCC14R	Back Box /w 7 LRM Space and Door	same	sold under a different co. name	same
4	3-RCC14B and 3-RCC14D	ADT-RCC14R	Back Box /w 7 LRM Space and Door	same	sold under a different co. name	same
4	3-RCC14B and 3-RCC14D	3-RCC7R	Back Box /w 7 LRM Space and door	20% less mass	shorter box fits 7 cards not 14	Same
4	3-RCC14B and 3-RCC14D	XLS-RCC7R	Back Box /w 7 LRM Space and Door	20% less mass	shorter box fits 7 cards not 14, sold under a different co. name	same
4	3-RCC14B and 3-RCC14D	ADT-RCC7R	Back Box /w 7 LRM Space and Door	20% less mass	shorter box fits 7 cards not 14, sold under a different co. name	same
5	3-RCC21B with 3-RCC21D	3-RCC21R	Back Box /w 21 LRM Space with Door	same		same
5	3-RCC21B with 3-RCC21D	XLS-RCC21R	Back Box /w 21 LRM Space with Door	same	sold under a different co. name	same
5	3-RCC21B with 3-RCC21D	ADT-RCC21R	Back Box /w 21 LRM Space with Door	same	sold under a different co. name	same
19	BPS10A	XLS-BPS10A	Remote Booster Power Supply, 10A, 120Vac, Red	same	sold under a different co. name	same
19	BPS10A	ADT-BPS10A	Remote Booster Power Supply, 10A, 120Vac, Red	same	sold under a different co. name	same

Tested	Tested Ref.	GE Part #	Description	Difference From Tested Item (If Untested)		
19	BPS10A	XLS-BPS6A	Remote Booster Power Supply, 10A, 120Vac, Red	10% less mass	current capacity different co. name	same
19	BPS10A	ADT-BPS6A	Remote Booster Power Supply, 10A, 120Vac, Red	10% less mass	current capacity different co. name	same
21	FW-19LCDTS3W	FW-19LCDTS3W	19 Inch touch screen monitor	Tested		
20	FW4UL4	FW4UL4	FireWork Computer	Tested		
20, 21	FW-SP4I	FW-SP4I	Four port FireWorks Serial Card	Tested		
20, 21	PCWD2	PCWD2	FireWorks Computer watchdog Card	Tested		