2013 CBC STANDARD SUSPENDED CEILING DETAILS FOR ACOUSTICAL TILE OR LAY-IN PANEL CEILINGS

REVIEWED FOR CODE COMPLIANCE
OPD-0002-13
BY: M. R. Karim
DATE: 10/07/2014
CALIFORNIA BUILDING CODE, 2013

DRAWING INDEX

REVISIONS

CLX **DRAWING INDEX, NARRATIVE AND FLOWCHART**

CLX.00 DRAWING INDEX - PAGE 1 OF 2
CLX.01 DRAWING INDEX - PAGE 2 OF 2
CLX.02 NARRATIVE - PAGE 1 OF 3
CLX.03 NARRATIVE - PAGE 2 OF 3
CLX.04 NARRATIVE - PAGE 3 OF 3
CLX.05 FLOWCHART - OVERVIEW OF OPD USE
CLX.06 FLOWCHART - CEILING GRID
CLX.07 FLOWCHART - STRUT AND OBSTRUCTIONS
CLX.08 FLOWCHART - CONNECTIONS TO STRUCTURE

CL0 **GENERAL NOTES**

CL0.00 GENERAL NOTES - PAGE 1 OF 4
CL0.01 GENERAL NOTES - PAGE 2 OF 4
CL0.02 GENERAL NOTES - PAGE 3 OF 4
CL0.03 GENERAL NOTES - PAGE 4 OF 4

CL1 **SUSPENDED CEILING FRAMING COMPONENTS**

CL1.10 POWER ACTUATED FASTENER (PAF) IN CONCRETE OVER METAL DECK OR CONCRETE SLAB - PAGE 1 OF 2
CL1.11 POWER ACTUATED FASTENER (PAF) IN CONCRETE OVER METAL DECK OR CONCRETE SLAB - PAGE 2 OF 2
CL1.12 POWER ACTUATED FASTENER (PAF) IN STEEL
CL1.13 POWER ACTUATED FASTENER (PAF) GENERAL NOTES (INSTALLED IN CONCRETE FILLED METAL B DECK)
CL1.14 POWER ACTUATED FASTENER (PAF) ALLOWABLE STRENGTHS (INSTALLED IN CONCRETE FILLED METAL B DECK)
CL1.20 EXPANSION ANCHOR GENERAL NOTES
CL1.21 EXPANSION ANCHOR ALLOWABLE STRENGTHS
CL1.22 EXPANSION ANCHOR GENERAL NOTES (INSTALLED IN CONCRETE FILLED METAL B DECK)
CL1.23 EXPANSION ANCHOR ALLOWABLE STRENGTHS (INSTALLED IN CONCRETE FILLED METAL B DECK)
CL1.30 SHEET METAL SCREW GENERAL NOTES
CL1.31 SHEET METAL SCREW ALLOWABLE STRENGTHS - PAGES 1 OF 2
CL1.32 SHEET METAL SCREW ALLOWABLE STRENGTHS - PAGES 2 OF 2
CL1.40 METAL STUD PROFILES

CL2 **SUSPENDED CEILING BRACING ASSEMBLY**

CL2.10 SUSPENDED CEILING BRACING ASSEMBLY
CL2.20 TYPICAL CEILING PLAN FOR $1.73 < S_{DS} \leq 2.50$ AND $z/h \leq 1.0$
CL2.21 TYPICAL CEILING PLAN FOR $1.15 < S_{DS} \leq 1.73$ AND $z/h \leq 1.0$
CL2.22 TYPICAL CEILING PLAN FOR $S_{DS} \leq 1.15$ AND $z/h \leq 1.0$
CL2.30 CORRIDOR CEILING PLAN
CL2.40 EXPANSION JOINT AT INTERSECTIONS
CL2.50 TYPICAL CEILING SECTION AT EXITWAY CORRIDORS
CL2.60 CEILING PERIMETER INCLUDING NON-EXITWAY CORRIDORS
CL2.70 CUBICLE CURTAIN/ I.V. TRACK
CL2.80 LIGHT FIXTURE/ AIR TERMINAL SUPPORT DETAIL

REVIEWED FOR CODE COMPLIANCE
oshpd
OPD-0002-13
BY: M. R. Karim
DATE: 10/07/2014
CALIFORNIA BUILDING CODE 2013

Section Title : OSHPD STANDARD SUSPENDED CEILING DETAILS

OPD No:

Sheet Title : DRAWING INDEX - PAGE 1 OF 2

CLX.00

DRAWING INDEX | REVISIONS

CL3 STRUT DETAILS

CL3.10 CHANNEL TYPE STRUT
CL3.20 TUBE TYPE STRUT

CL4 HANGER AND BRACING WIRE CONNECTION DETAILS

CL4.10 HANGER AND BRACING WIRE CONNECTION - TYPICAL WIRE TURNS
CL4.11 HANGER AND BRACING WIRE CONNECTION MATRIX

CL4.21 HANGER WIRE – CONCRETE OVER METAL DECK
CL4.22 HANGER WIRE – CONCRETE SLAB, BEAM, OR JOIST
CL4.23 HANGER WIRE – STRUCTURAL STEEL
CL4.24 HANGER WIRE – SAWN TIMBER
CL4.25 HANGER WIRE – METAL STUD WALL

CL4.31 BRACING WIRE – CONCRETE OVER METAL DECK
CL4.32 BRACING WIRE – CONCRETE SLAB, BEAM, OR JOIST
CL4.33 BRACING WIRE – STRUCTURAL STEEL
CL4.34 BRACING WIRE – SAWN TIMBER
CL4.35 BRACING WIRE – METAL STUD WALL

CL5 STRUT CONNECTION DETAILS

CL5.10 STRUT CONNECTION MATRIX
CL5.20 STRUT CONNECTION TO CONCRETE OVER METAL DECK
CL5.30 STRUT CONNECTION TO CONCRETE SLAB, BEAM OR JOIST
CL5.40 STRUT CONNECTION TO STRUCTURAL STEEL
CL5.50 STRUT CONNECTION TO SAWN TIMBER WITH GYPSUM BOARD
CL5.60 STRUT CONNECTION TO SAWN TIMBER WITHOUT GYPSUM BOARD

CL6 SPECIAL DETAILS

CL6.10 OBSTRUCTION – TRAPEZE CONDITION
CL6.20 OBSTRUCTION – BRIDGE AT LARGE OFFSET CONDITION
CL6.21 SADDLE TIE DETAIL
CL6.30 OBSTRUCTION – COUNTER SLOPING STRUTS
CL6.40 OBSTRUCTION – RECESSED LIGHT AT PERIMETER
CL6.50 OBSTRUCTION – STUD KICKER TO OVERHEAD
CL6.60 OBSTRUCTION – STUD KICKER TO WALL - PAGE 1 OF 2
CL6.61 OBSTRUCTION – STUD KICKER TO WALL - PAGE 2 OF 2

CODE COMPLIANCE
OPD-0002-13
BY: M. R. Karim
CALIFORNIA BUILDING CODE, 2013

Section Title : OSHPD STANDARD SUSPENDED CEILING DETAILS

OPD No:

Sheet Title : DRAWING INDEX - PAGE 2 OF 2

CLX.01

10/1/2014 10:29:27 AM

NARRATIVE

2013 California Building Code (2013 CBC) Standard Ceiling Details document contains OSHPD Pre-Approved Details (OPD), which may be incorporated into construction documents. These details have been reviewed for compliance with the 2013 CBC and, when used as shown, without modifications, are deemed to comply with code. They are intended to cover common conditions that occur on many projects. It is anticipated that use of these details will facilitate the design, review, and construction process.

The Narrative and supporting Flowchart, which follows the Narrative, are provided to assist in selecting applicable details from the OPD for incorporation into the construction documents. It is to be used only as a guide and does not provide complete step-by-step instructions for use of the OPD. Narrative comment numbers correspond to the numbered items on the Flowchart.

The following steps apply to the use of OPD:

1. Define Project Parameters

A. Short Period Spectral Response Acceleration (SDS) for project site.

i. The ("S_{DS}") identified for use with the OPD shall not be lower than the SDS documented in the project General Notes and/or Specifications.

B. Type of construction.

i. The Registered Design Professional (RDP) in responsible charge shall identify the floor and/or roof framing materials which apply to the use of the OPD under consideration (e.g. wood, concrete, metal deck).

C. Project specific geometry and other conditions.

i. The RDP in responsible charge shall identify the geometry which applies to the use of the OPD under consideration (e.g. floor-to-ceiling height, etc).

ii. The RDP in responsible charge shall identify other unique conditions which apply to the use of the OPD under consideration (e.g. mechanical duct conflicts and other obstructions).

2. Verify Applicability of OPD
Refer to PIN 51.

OPD allow design professionals to incorporate pre-approved details into their construction documents. Projects that utilize OPD shall satisfy the following conditions.

A. The RDP in responsible charge shall verify the applicability of the OPD for their specific project conditions. For example, when designing a fire-rated ceiling, use of the ceiling OPD are acceptable provided the OPD are compatible with the construction requirements for the fire rated assembly.

B. The OPD must be directly applicable to the project conditions. For example, OPD for attachment of a ceiling below a steel deck with concrete fill are not applicable to wood frame construction.

C. Substitutions of items shown in the OPD are not permitted, unless specifically allowed by the OPD. For example, a power-actuated fastener (PAF) may not be substituted in a connection detail that specifies an expansion anchor, unless the OPD specifically permits it. Use of post-installed anchors from different manufacturers is permitted, provided the substituted anchors meet the installation criteria and Allowable Strengths as specified in the OPD. See item #6 of the general notes on CL0.00.

D. Changes to the OPD to accommodate project conditions are not permitted. In such cases, project specific details are required.

REVIEWED FOR CODE COMPLIANCE
OSHPD
OPD-0002-13
BY: M. R. Karim
DATE: 10/07/2014
OFFICE OF STATEWIDE HEALTH PLANNING & DEVELOPMENT

Section Title : OSHPD STANDARD SUSPENDED CEILING DETAILS			OPD No:
Sheet Title : NARRATIVE - PAGE 1 OF 3			CLX.02

3. Select Appropriate Details from OPD

Review OPD General Notes before the start of OPD selection process.

A. The GENERAL NOTES section of this OPD document provides detailed specification of the materials and the workmanship associated with the details. The RDP in responsible charge shall confirm the applicability of the OPD details and the specifications noted in this section (CL0.00, CL0.01, CL0.02, CL0.03). Refer to CL2.10 to confirm general configuration requirements.

B. Typical geometric conditions shall be verified from CL2.20-CL2.22. Refer to Note 10 of the GENERAL NOTES for system component requirements.

C. Ceiling boundary condition shall be provided in conformance with the requirements detailed on CL2.50 and CL2.60. Refer to Note 11 of the GENERAL NOTES for system installation requirements.

D. Detailing requirements needed to comply with the requirements for both attached and free joint conditions in corridor ceilings are shown on CL2.30, CL2.40, CL2.50 and CL2.60. Refer to Note 12 of the GENERAL NOTES.

E. CL2.70 and CL2.80 show the necessary detailing requirements for the support of Curtain Tracks, Air Terminals, and Light Fixtures suspended directly from the ceiling system. Refer to Note 15 of the GENERAL NOTES.

F. Hanger and Bracing Wire specifications are shown in Note 9 of the GENERAL NOTES. CL4.10 graphically illustrates the requirements of the specifications at the terminal ends of the wire.

G. Strut requirements are detailed in CL3.XX. Channel and Electrical Metallic Tubing (EMT) are the two types of Struts that are included within the scope of this OPD. Refer to Note 13 of the GENERAL NOTES for system installation requirements.

1. Channel Type Strut details are shown on CL3.10.
2. Electrical Metallic Tubing (EMT) Strut details are shown on CL3.20.

H. Requirements for detailing at obstructions between the ceiling and the support structure are illustrated in CL6.XX. Different obstruction types require special detailing of Hanger Wires, Bracing Wires, and Struts. Refer to Note 14 of the GENERAL NOTES for system installation requirements.

1. Requirements for detailing at obstructions at Hanger and Bracing Wires are shown on CL6.10. CL6.20, CL6.40, CL6.50, & CL6.60.

2. Requirements for detailing at obstructions at Struts are shown on CL6.20. CL6.30, CL6.50, & CL6.60.

I. Connection detail requirements for the connection of Hanger and Bracing Wire to support structure are illustrated in Details CL4.XX. Detail requirements for attachment to various structural materials and systems are included in these details. Refer to Note 14 of the GENERAL NOTES for system installation requirements. Refer to Details CL1.XX for fastener design capacities and component properties.

J. Connection detail requirements for the connection of Strut to support structure are illustrated in Details CL5.XX. Detail requirements for attachment to various structural materials and systems are included in these details. Refer to Note 14 of the GENERAL NOTES for system installation requirements. Refer to Details CL1.XX for fastener design capacities and component properties.

REVIEWED FOR CODE COMPLIANCE
OPD-0002-13
BY: M. R. Karim
DATE: 10/07/2014
OFFICE OF STATEWIDE HEALTH PLANNING & DEVELOPMENT
BUILDING STANDARDS

Section Title : OSHPD STANDARD SUSPENDED CEILING DETAILS			OPD No:
Sheet Title : NARRATIVE - PAGE 2 of 3			CLX.03

4. Implementation and Use of OPD During Plan Review
Refer to PIN 51.

5. Implementation and Use of OPD During Construction Process
Refer to PIN 51.

A. During construction, OPD are treated as any other detail in the approved construction documents.

B. Pre-approved details submitted after the construction documents have been approved and a building permit has been issued shall be used and/or processed in accordance with Code Application Notice 2-107.4 "Amended Construction Documents." Pre-approved details may be applied as alternates to the approved details shown on the permitted construction documents only on a one for one basis and with written consent of the registered design professional and the registered design professional in responsible charge and in concurrence with OSHPD field staff. Pre-approved details are exempt from additional plan review provided they are incorporated without any modifications. Pre-approved details are subject to field confirmation at which time the applicability of the pre-approved details for specific project conditions shall be evaluated.

C. Changing the scope of a project (adding additional ceilings, for example) does constitute a material alteration to the project, even if OPD can be used for all conditions. In such a case, an Amended Construction Document shall be submitted to OSHPD field staff for review.

REVIEWED FOR CODE COMPLIANCE
oshpd
OPD-0002-13
BY: M. R. Karim
DATE: 10/07/2014
CALIFORNIA BUILDING CODE, 2013

Section Title : OSHPD STANDARD SUSPENDED CEILING DETAILS		OPD No:
Sheet Title : NARRATIVE - PAGE 3 of 3		CLX.04

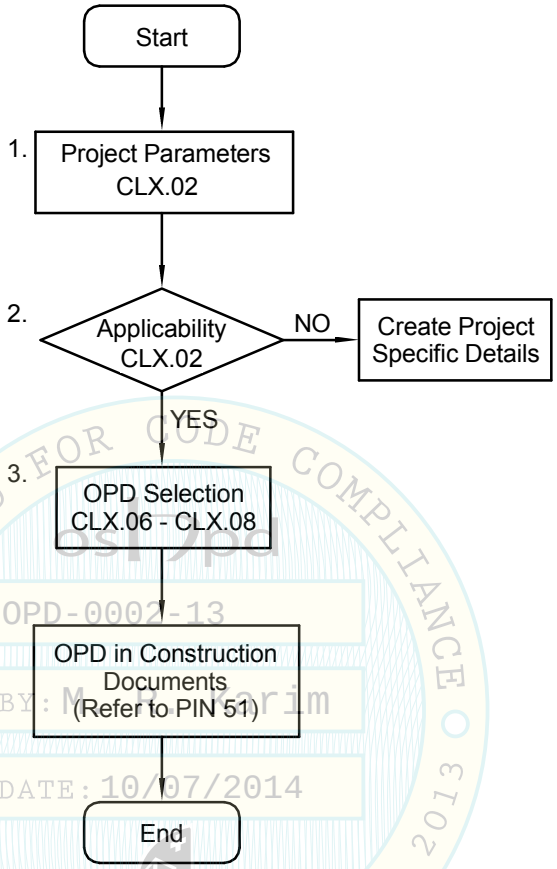

REVIEWED FOR CODE COMPLIANCE
CALIFORNIA BUILDING CODE, 2013
oshpd
OPD-0002-13
BY: M. R. Karim
DATE: 10/07/2014

Section Title : OSHPD STANDARD SUSPENDED CEILING DETAILS		OPD No:
Sheet Title : FLOWCHART - OVERVIEW OF OPD USE		CLX.05

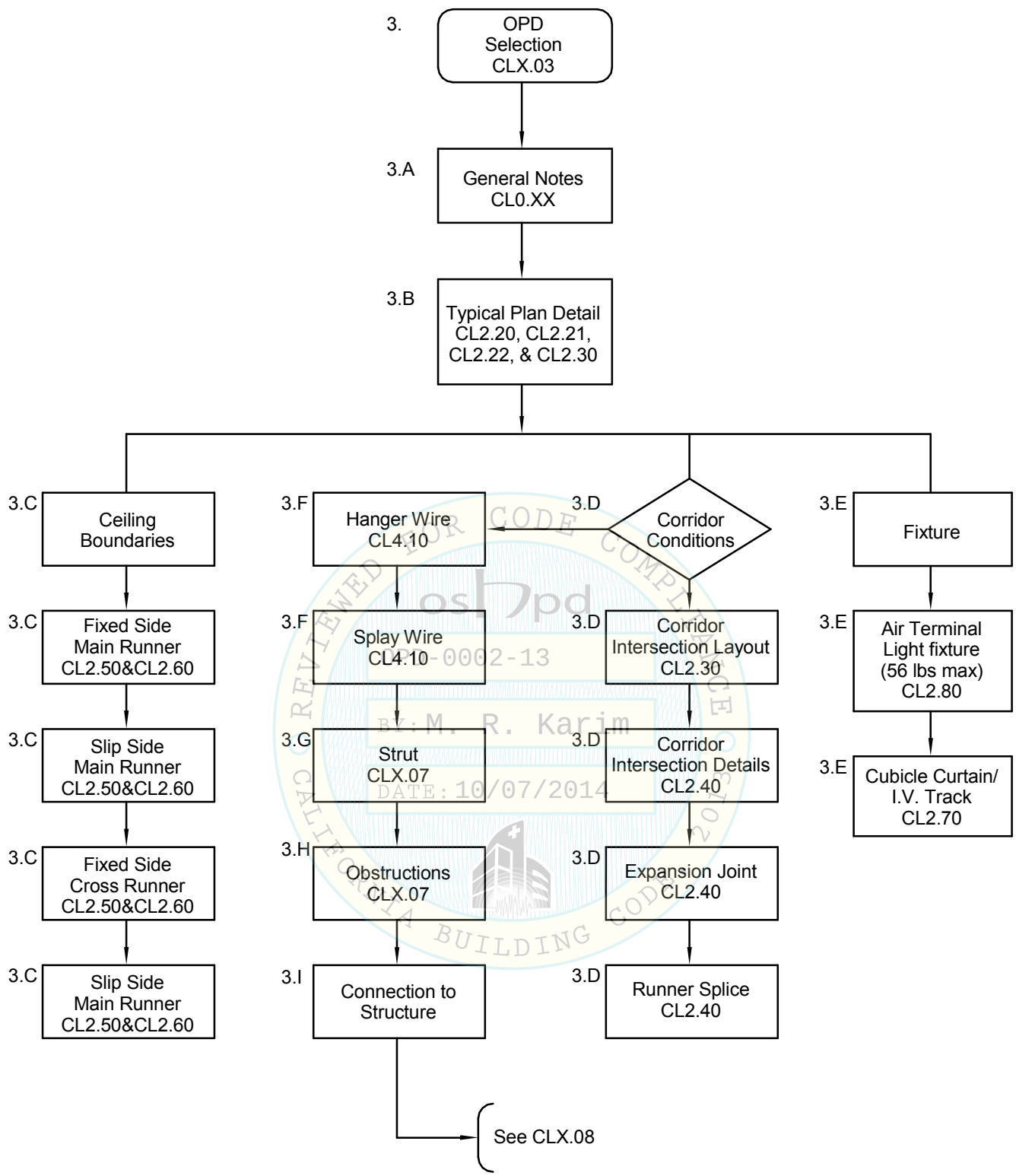

REVIEWED FOR CODE COMPLIANCE
oshpd
OPD-0002-13
BY: M. R. Karim
DATE: 10/07/2014
CALIFORNIA BUILDING CODES

Section Title : OSHPD STANDARD SUSPENDED CEILING DETAILS		OPD No:
Sheet Title : FLOWCHART - CEILING GRID		CLX.06

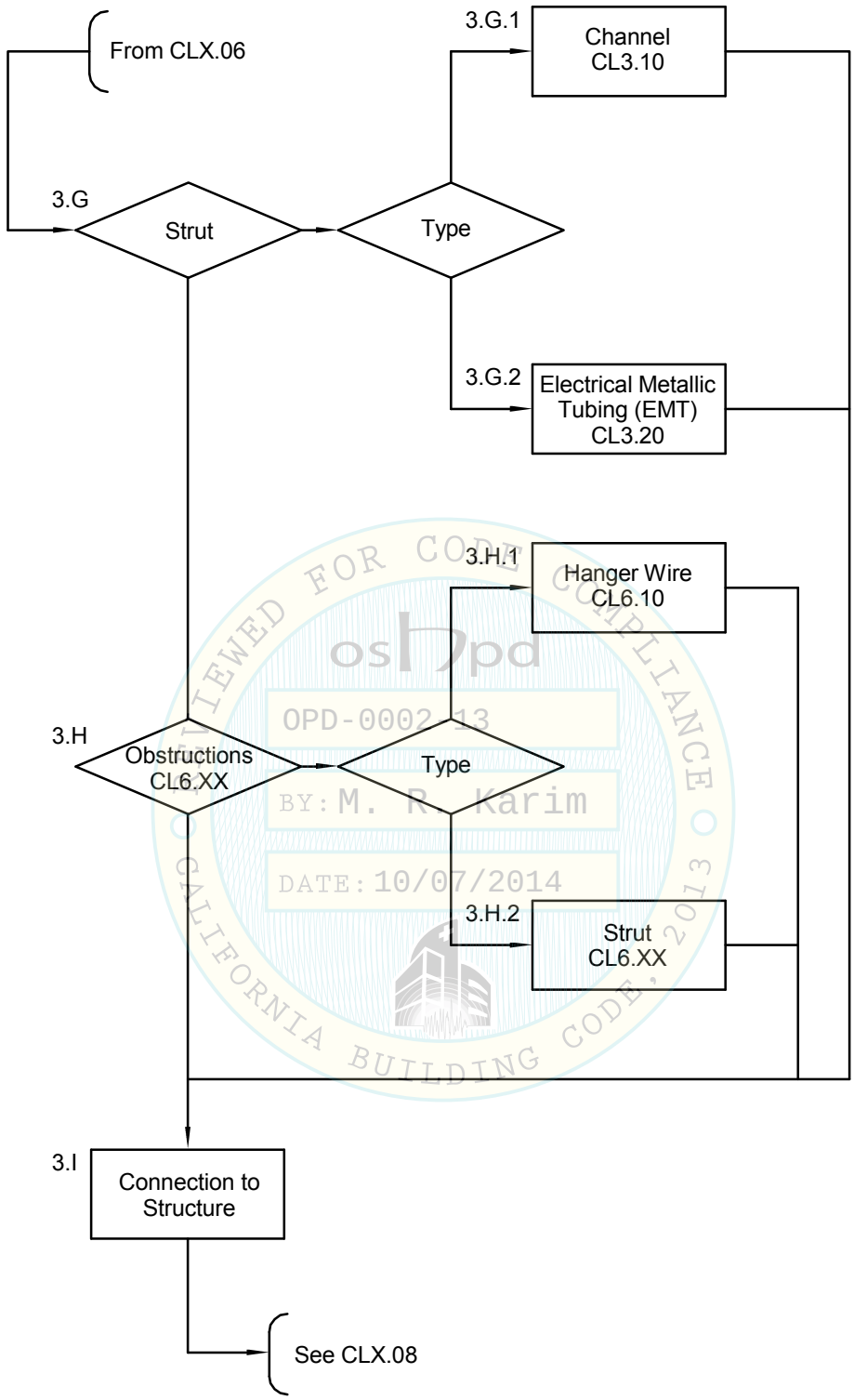

REVIEWED FOR CODE COMPLIANCE
oshpd
OPD-0002-13
BY: M. R. Karim
DATE: 10/07/2014
CALIFORNIA BUILDING CODE, 2013

Section Title : OSHPD STANDARD SUSPENDED CEILING DETAILS		OPD No:
Sheet Title : FLOWCHART - STRUT AND OBSTRUCTIONS		CLX.07

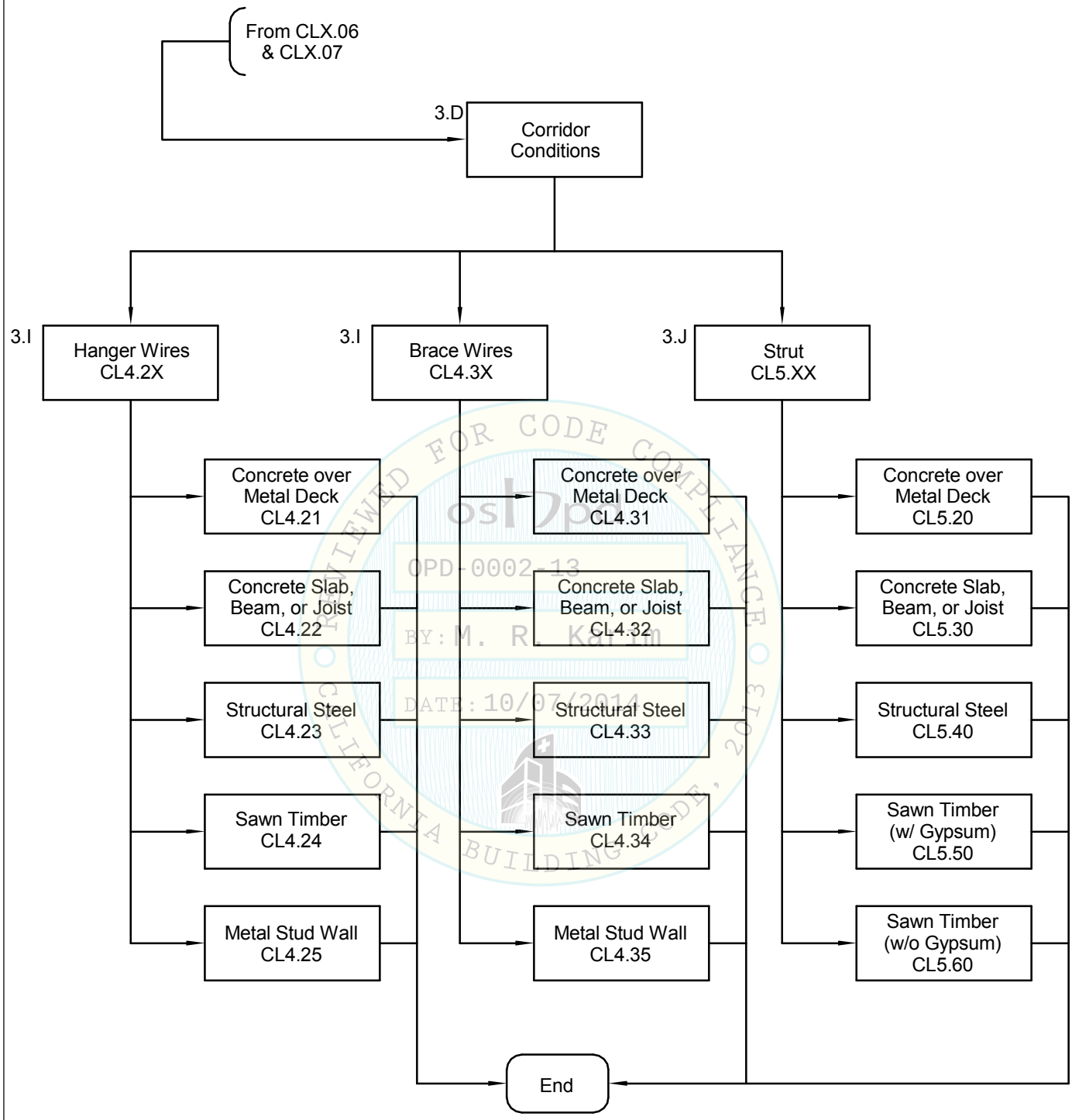

REVIEWED FOR CODE COMPLIANCE
OSHPD
OPD-0002-13
BY: M. R. Karim
DATE: 10/07/2014
CALIFORNIA BUILDING CODE, 2013

Section Title : OSHPD STANDARD SUSPENDED CEILING DETAILS		OPD No:
Sheet Title : FLOWCHART - CONNECTIONS TO STRUCTURE		CLX.08

GENERAL NOTES

1. CONSTRUCTION, WORKMANSHIP AND MATERIAL SHALL CONFORM TO THE 2013 CALIFORNIA BUILDING STANDARDS CODE (CBSC 2013).

2. THE CONTRACTOR SHALL NOTIFY OSHPD AND THE REGISTERED DESIGN PROFESSIONAL (RDP) IN RESPONSIBLE CHARGE WHERE A CONFLICT OR DISCREPANCY OCCURS BETWEEN THE CONSTRUCTION DRAWINGS AND ANY OTHER PORTION OF THE CONSTRUCTION DOCUMENTS, FIELD CONDITIONS, OR WHERE ANY CONDITIONS ARISE NOT COVERED BY THESE DOCUMENTS WHEREIN WORK WILL NOT COMPLY WITH CODE REQUIREMENTS.

3. THE INTENT OF THE DRAWINGS AND SPECIFICATIONS IS TO CONSTRUCT THE HOSPITAL BUILDING IN ACCORDANCE WITH THE CALIFORNIA BUILDING STANDARD CODE, 2013 (CBSC 2013). SHOULD ANY CONDITION DEVELOP NOT COVERED BY THE APPROVED CONSTRUCTION DOCUMENTS WHEREIN THE WORK WILL NOT COMPLY WITH CBSC 2013, A CHANGE ORDER DETAILING AND SPECIFYING THE REQUIRED WORK SHALL BE SUBMITTED TO AND APPROVED BY OSHPD BEFORE PROCEEDING WITH THE WORK.

4. GALVANIZED METAL STUDS, TRACKS AND SHEET STEEL SHALL CONFORM TO ASTM A653-11 MATERIAL, OR OTHER EQUIVALENT ASTM LISTED MATERIALS IN SECTION A2.1 OF THE AISI SI00-07/S2-10; NORTH AMERICAN SPECIFICATION FOR THE DESIGN OF COLD-FORMED STEEL STRUCTURAL MEMBERS WITH SUPPLEMENT 2, DATED 2010, WITH A MINIMUM YIELD STRENGTH OF 33 KSI FOR 43 MIL (18 GAGE) AND LIGHTER AND MINIMUM YIELD STRENGTH OF 50 KSI FOR HEAVIER GAGES.

   METAL STUDS AND TRACKS SHALL BE OF SIZE, THICKNESS AND SECTION PROPERTIES SHOWN ON TABLES 1-1, 1-2 AND 1-3 OF THE AISI MANUAL, COLD-FORMED STEEL DESIGN, 2008 EDITION. THE RDP IN RESPONSIBLE CHARGE SHALL OBTAIN OSHPD APPROVAL FOR ANY SUBSTITUTIONS.

5. ELECTRICAL METALLIC TUBE (EMT) SHALL BE ANSI C80.3/UL 797 CARBON STEEL WITH G90 GALVANIZING. EMT SHALL HAVE MINIMUM YIELD STRENGTH OF (Fy =) 30 KSI AND MINIMUM ULTIMATE STRENGTH OF (Fu =) 48 KSI.

6. THESE OPD REFER TO FASTENER TYPE AND SIZE BUT DO NOT SPECIFY OR ENDORSE A SPECIFIC MANUFACTURER. THE RDP IN RESPONSIBLE CHARGE SHALL SELECT A MANUFACTURER AND SELECTED FASTENER CAPACITIES SHALL MATCH OR EXCEED THE STRENGTHS LISTED HEREIN. THE FOLLOWING REQUIREMENTS SHALL ALSO BE MET:

   a. SHEET METAL SCREWS SHALL COMPLY WITH ASTM C 1513-10, ASME B18.6.4-98 (R2005) AND ICC-ES AC 118 AND ALLOWABLE STRENGTH SHALL BE BASED ON INFORMATION PROVIDED IN CL1.31 AND CL1.32. PENETRATION OF SCREWS THROUGH JOINED MATERIAL SHALL NOT BE LESS THAN THREE EXPOSED THREADS.

   b. WELDING SHALL BE IN ACCORDANCE WITH AWS D1.3 USING E60XX SERIES ELECTRODES. FIELD WELDING SHALL HAVE SPECIAL INSPECTION IN ACCORDANCE WITH 2013 CBC SECTION 1705A.2.

   c. POST- INSTALLED ANCHORS (E.G. EXPANSION ANCHORS, SCREW ANCHORS AND POWER ACTUATED FASTENERS) SHALL HAVE SPECIAL INSPECTION AND TESTING IN ACCORDANCE WITH THE 2013 CBC SECTIONS 1705A.3 & 1913A.7. FOR QUALIFICATION, DESIGN AND USE OF POST-INSTALLED ANCHORS IN CONCRETE SEE THE 2013 CBC SECTIONS 1616A.1.19 AND 1908A.1.1. LISTING OF CURRENT ICC-ES EVALUATION REPORTS (OR REPORTS FROM OTHER TESTING AGENCIES ACCEPTABLE TO OSHPD) SHALL BE REQUIRED FOR FASTENER USED.

   d. POWER-ACTUATED FASTENERS (PAF), POWDER DRIVEN FASTENERS (PDF), POWER DRIVEN PINS (PDP) AND SHOT PINS ALL REPRESENT THE SAME FASTENER AND WILL HEREAFTER BE REFERRED TO AS POWER ACTUATED FASTENERS (PAF). PAF'S SHALL SATISFY THE CURRENT AC70-ACCEPTANCE CRITERIA FOR FASTENERS POWER-DRIVEN INTO CONCRETE, STEEL AND MASONRY ELEMENTS AND THE 2013 CBC SECTION 1908A.1.1. LISTING OF CURRENT ICC ES EVALUATION REPORTS (OR REPORTS FROM OTHER TESTING AGENCIES ACCEPTABLE TO OSHPD) SHALL BE REQUIRED FOR FASTENERS USED.

   e. FOR PAF INSTALLED IN STEEL THE FASTENER PENETRATION SHALL HAVE THE ENTIRE POINTED END OF THE FASTENER DRIVEN THROUGH THE STEEL MEMBER, EXCEPT AS NOTED IN CURRENT REPORTS FROM TESTING AGENCIES ACCEPTABLE TO OSHPD.

REVIEWED FOR CODE COMPLIANCE
OSHPD
BY: M. R. Karim
DATE: 10/07/2014

Section Title : OSHPD STANDARD SUSPENDED CEILING DETAILS		OPD No:
Sheet Title : GENERAL NOTES - PAGE 1 OF 4		CL0.00

7. DESIGN CRITERIA

a. BUILDING CODE: 2013 CALIFORNIA BUILDING CODE (2013 CBC), ASCE 7-10, AISI S100-07/S2-10, ASTM E580-14, C635-13a, AND C636-13. FOR LOAD COMBINATIONS, ALLOWABLE STRESS DESIGN SHALL BE IN ACCORDANCE WITH 2013 CBC SECTION 1605A.3.1.

b. FASTENER CAPACITIES TABLES WERE DEVELOPED BASED ON ICC REPORTS BY SEVERAL MANUFACTURERS.

c. THE DESIGN ASSUMES THAT BUILDING ELEMENTS AND SUPPORTS, TO WHICH THE COMPONENTS ADDRESSED IN THIS DOCUMENT ARE ANCHORED, HAVE SUFFICIENT CAPACITY TO CARRY THE LOADS IMPOSED BY THE COMPONENTS IN COMBINATION WITH ALL OTHER LOADS. EVALUATION OF THE CAPACITY OF THESE SUPPORTING BUILDING ELEMENTS IS BEYOND THE SCOPE OF THE OPD.

d. THIS OPD IS LIMITED TO CEILING ASSEMBLIES HAVING MAXIMUM DEAD WEIGHT OF 4 PSF, INCLUDING LIGHTING FIXTURES (LUMINERIES) AND MECHANICAL SERVICES, EACH WEIGHING LESS THAN 56 LBS AND ATTACHED TO CEILING FRAMING SYSTEM. HEAVIER SYSTEM AND THOSE SUPPORTING LATERAL FORCES FROM PARTITION WALLS ARE OUTSIDE THE SCOPE OF THIS OPD AND WILL REQUIRE PROJECT SPECIFIC DESIGN.

8. THE RDP IN RESPONSIBLE CHARGE SHALL VERIFY THE FIRE RESISTENCE AND ACOUSTICAL RATINGS FOR ALL CEILING ASSEMBLIES.

9. "CEILING WIRE" SHALL CONFORM WITH GALVANIZED SOFT ANNEALED MILD STEEL WIRE AS DEFINED IN ASTM A641 (CLASS 1 COATING) WITH 70 KSI MINIMUM TENSILE STRENGTH:

a. FOUR (4) TWISTS OF WIRE WITHIN 1.5" DEVELOPS THE ALLOWABLE LOAD FOR THE WIRE.

b. THREE (3) TWISTS WITHIN 3" MAY BE USED TO DEVELOP THE MAXIMUM 50% OF ALLOWABLE LOAD.

10. SUSPENSION SYSTEM COMPONENTS SHALL COMPLY WITH ASTM C635 AND E580 SECTION 5.1:

a. THE CEILING GRID SYSTEM SHALL BE RATED HEAVY DUTY AS DEFINED BY ASTM C635.

b. HANGER AND BRACING WIRES SHALL BE #12 GAGE (0.106" DIAMETER), SOFT ANNEALED, AND GALVANIZED STEEL WIRES WITH CLASS 1 COATING. THEY MAY BE USED FOR UP TO AND INCLUDING 4'-0"x 4'-0" GRID SPACING ALONG AND ATTACHED TO MAIN RUNNERS. SPLICES ARE NOT PERMITTED IN ANY HANGER WIRE.

c. MAIN RUNNERS AND CROSS RUNNERS ALONG WITH THEIR SPLICES, INTERSECTION CONNECTORS, AND EXPANSION DEVICES SHALL BE DESIGNED AND CONSTRUCTED TO CARRY A MEAN ULTIMATE TEST LOAD OF NOT LESS THAN 180 LBS. IN COMPRESSION & TENSION, IN ACCORDANCE WITH ASTM 580 SECTION 5.1.2.

11. SUSPENSION SYSTEM INSTALLATION, SHALL COMPLY WITH ASTM C636 AND E580 SECTION 5.2:

a. PROVIDE #12 GAGE HANGER WIRES AT THE ENDS OF ALL MAIN AND CROSS RUNNERS WITHIN EIGHT (8) INCHES OF THE SUPPORT OR WITHIN ONE-FOURTH (1/4) OF THE LENGTH OF THE END TEE, WHICHEVER IS LESS, FOR THE PERIMETER OF THE CEILING AREA. PERIMETER WIRES ARE NOT REQUIRED WHEN THE LENGTH OF THE END TEE IS EIGHT (8) INCHES OR LESS.

b. CEILING GRID MEMBERS SHALL BE ATTACHED TO TWO (2) ADJACENT WALLS, IN ACCORDANCE WITH ASTM E580 SECTION 5.2.3. CEILING GRID MEMBERS SHALL BE AT LEAST 3/4" INCH CLEAR OF OTHER WALLS. IF WALLS RUN DIAGONAL TO THE CEILING GRID SYSTEM RUNNERS, ONE END OF MAIN AND CROSS RUNNERS SHOULD BE FREE, AND A MINIMUM OF 3/4 INCH CLEAR OF WALL.

c. THE WIDTH OF THE PERIMETER SUPPORTING CLOSURE ANGLE SHALL BE NOT LESS THAN TWO (2) INCHES. USE OF ANGLES WITH SMALLER WIDTHS IN CONJUNCTION WITH PERIMETER CLIPS SHALL REQUIRE AN ALTERNATE METHOD OF COMPLIANCE WITH ADEQUATE JUSTIFICATION AND ARE OUTSIDE THE SCOPE OF THIS OPD.

d. AT THE PERIMETER OF THE CEILING AREA WHERE MAIN OR CROSS RUNNERS ARE NOT CONNECTED TO THE ADJACENT WALL, PROVIDE INTERCONNECTION BETWEEN THE RUNNERS AT THE FREE END TO PREVENT LATERAL SPREADING. A METAL STRUT OR A #16 GAGE WIRE WITH A POSITIVE MECHANICAL CONNECTION TO RUNNER MAY BE USED. WHERE THE PERPENDICULAR DISTANCE FROM THE WALL TO THE FIRST PARALLEL RUNNER IS EIGHT (8) INCHES OR LESS, THIS INTERCONNECTION IS NOT REQUIRED.

REVIEWED FOR CODE COMPLIANCE
OSHPD
OPD-0002-13
DATE: 10/07/2014
CALIFORNIA STATE BUILDING CODE

Section Title : OSHPD STANDARD SUSPENDED CEILING DETAILS		OPD No:
Sheet Title : GENERAL NOTES - PAGE 2 OF 4		CL0.01

12. EXPANSION JOINTS, SEISMIC SEPARATIONS, AND PENETRATIONS:

a. EXPANSION JOINTS SHALL BE PROVIDED IN THE CEILING AT INTERSECTIONS OF CORRIDORS AND AT JUNCTIONS OF CORRIDORS WITH LOBBIES OR OTHER SIMILAR AREAS.

b. FOR CEILING AREAS EXCEEDING 2500 SQUARE FEET, A SEISMIC SEPARATION JOINT SHALL BE PROVIDED TO DIVIDE THE CEILING INTO AREAS NOT EXCEEDING 2500 SQ. FT.

c. PENETRATIONS THROUGH THE CEILING FOR SPRINKLER HEADS AND OTHER SIMILAR DEVICES THAT ARE NOT INTEGRALLY TIED TO THE CEILING SYSTEM IN THE LATERAL DIRECTION SHALL HAVE A TWO (2) INCH OVERSIZED RING, SLEEVE OR ADAPTER THROUGH THE CEILING TILE TO ALLOW FREE MOVEMENT OF ONE (1) INCH IN ALL HORIZONTAL DIRECTIONS. A FLEXIBLE SPRINKLER HOSE FITTING THAT CAN ACCOMMODATE ONE (1) INCH OF CEILING MOVEMENT SHALL BE PERMITTED TO BE USED IN LIEU OF THE OVERSIZED RING, SLEEVE OR ADAPTER. SUCH FLEXIBLE SPRINKLER HOSE SHALL BE ADEQUATELY SUPPORTED FROM SOFFIT SO AS NOT TO EXCEED THE MAXIMUM TRIBUTARY WEIGHT OF THE CEILING.

13. LATERAL FORCE BRACING:
LATERAL FORCE BRACING IS REQUIRED IN ACCORDANCE WITH THIS SECTION FOR ALL CEILING AREAS, UON.

EXCEPTION: LATERAL FORCE BRACING MAY BE OMITTED FOR SUSPENDED ACOUSTICAL CEILING SYSTEMS WITH A CEILING AREA OF 144 SQ. FT. OR LESS, WHEN PERIMETER SUPPORT IN ACCORDANCE WITH ASTM E580 ARE PROVIDED AND PERIMETER WALLS ARE DESIGNED TO CARRY THE CEILING LATERAL FORCES.

a. PROVIDE LATERAL-FORCE BRACING ASSEMBLIES CONSISTING OF A STRUT AND FOUR (4) #12 GAGE BRACING WIRES ORIENTED 90 DEGREES FROM EACH OTHER.

b. LATERAL-FORCE BRACING ASSEMBLIES SHALL BE SPACED IN ACCORDANCE WITH CL2.20 THROUGH CL2.22 AND CL2.30 FROM EACH WALL AND AT THE EDGES OF ANY CHANGE OF ELEVATION OF THE CEILING.

c. THE SLOPE OF BRACING WIRES MAY BE FROM 10 TO 45 DEGREES BUT MAY NOT EXCEED 45 DEGREES FROM THE PLANE OF THE CEILING AND WIRES SHALL BE TAUT.

d. STRUTS SHALL BE ADEQUATE TO RESIST THE VERTICAL COMPONENT INDUCED BY THE BRACING WIRES, AND SHALL NOT BE MORE THAN 1 (HORIZONTAL) IN 6 (VERTICAL) OUT OF PLUMB.

14. ATTACHMENT OF HANGER AND BRACING WIRES:

a. FASTEN #12 HANGER WIRES WITH NOT LESS THAN THREE (3) TIGHT TURNS IN 3 INCHES. HANGER WIRE LOOPS SHALL BE TIGHTLY WRAPPED AND SHARPLY BENT TO PREVENT ANY VERTICAL MOVEMENT OR ROTATION OF THE MEMBER WITHIN THE LOOPS.

b. FASTEN #12 BRACING WIRES WITH FOUR (4) TIGHT TURNS. MAKE ALL TIGHT TURNS WITHIN A DISTANCE OF 1 1/2" INCHES.

c. HANGER OR BRACING WIRE ANCHORED TO THE STRUCTURE SHOULD BE INSTALLED IN SUCH A MANNER THAT THE DIRECTION OF THE ANCHOR ALIGNS AS CLOSELY AS POSSIBLE WITH THE DIRECTION OF THE WIRE.

d. SEPARATE ALL CEILING HANGER AND BRACING WIRES AT LEAST SIX (6) INCHES FROM ALL UNBRACED DUCTS, PIPES CONDUITS, ETC.

e. HANGER WIRES SHALL NOT BE ATTACHED TO OR BEND AROUND INTERFERING MATERIAL OR EQUIPMENT. PROVIDE TRAPEZE OR OTHER SUPPLEMETARY SUPPORT MEMBERS AT OBSTRUCTIONS TO TYPICAL HANGER SPACING. PROVIDE ADDITIONAL HANGERS, STRUTS OR BRACES AS REQUIRED AT ALL CEILING BREAKS, SOFFITS, OR DISCONTINUOUS AREAS.

f. HANGER WIRES THAT ARE MORE THAN 1 (HORIZONTAL) IN 6 (VERTICAL) OUT OF PLUMB SHALL REQUIRE PROJECT SPECIFIC DESIGN.

g. WHEN DRILLED-IN CONCRETE ANCHORS OR PAF ARE USED IN REINFORCED CONCRETE FOR HANGER WIRES, 1 OUT OF 10 WIRE/ ANCHOR ASSEMBLIES SHALL BE FIELD TESTED FOR 200 LBS. IN TENSION. WHEN DRILLED-IN CONCRETE ANCHORS ARE USED FOR BRACING WIRES, 1 OUT OF 2 WIRE/ANCHOR ASSEMBLIES SHALL BE FIELD TESTED FOR 440 LBS. IN TENSION IN THE DIRECTION OF THE WIRE. PAF IN CONCRETE ARE NOT PERMITTED FOR BRACING WIRES.

FOR CODE COMPLIANCE
osPod
OPD-0002-13
REVIEWED
CALIFORNIA BUILDING CODE 2013

Section Title : OSHPD STANDARD SUSPENDED CEILING DETAILS		OPD No:
Sheet Title : GENERAL NOTES - PAGE 3 OF 4		CL0.02

15. **CEILING FIXTURES, TERMINALS, AND DEVICES:**

a. CEILING PANELS SHALL NOT SUPPORT ANY LIGHT FIXTURES, AIR TERMINALS/GRILLS, OR OTHER DEVICES (REFERRED TO ALL BY COMMON TERM FIXTURES HERE AFTER).

b. ALL FIXTURES SHALL BE MOUNTED IN A MANNER THAT WILL NOT COMPROMISE CEILING PERFORMANCE.

c. ALL FIXTURES SHALL BE ATTACHED TO THE SUSPENDED CEILING SYSTEM BY MECHANICAL MEANS, UNLESS INDEPENDENTLY SUPPORTED. THE ATTACHMENT DEVICE SHALL HAVE THE CAPACITY OF 100% OF FIXURE WEIGHT ACTING IN ANY DIRECTION. A MINIMUM OF TWO ATTACHMENT DEVICES ARE REQUIRED FOR EACH FIXTURE.

d. SURFACE MOUNTED FIXTURES SHALL BE ATTACHED TO THE MAIN RUNNER WITH POSITIVE CLAMPING DEVICES MADE OF MATERIAL WITH A MINIMUM 14 GAGE. A NO.12 GAUGE SAFETY WIRES SHALL BE ATTACHED BETWEEN THE CLAMPING DEVICE AND TO THE STRUCTURE ABOVE. IN NO CASE SHALL THE FIXTURES EXCEED THE DESIGN CAPACITY OF THE SUPPORTING MEMBERS.

e. ALL LIGHT FIXTURES WEIGHING LESS THAN OR EQUAL TO 10 LB. SHALL HAVE ONE NO. 12 GAUGE SAFETY WIRE CONNECTED FROM FIXURE HOUSING TO STRUCTURE ABOVE. IT IS NOT NECESSARY FOR THESE SAFETY WIRES TO BE TAUT.

f. ALL FIXTURES WEIGHING GREATER THAN 10 LB BUT LESS THAN OR EQUAL TO 56 LB. SHALL HAVE TWO NO. 12 GAUGE SAFETY WIRE CONNECTED FROM FIXURE HOUSING TO STRUCTURE ABOVE. IT IS NOT NECESSARY FOR THESE SAFETY WIRES TO BE TAUT.

g. ALL FIXTURES WEIGHING GREATER THAN 56 LB. SHALL BE SUPPORTED DIRECTLY FROM STRUCTURE ABOVE BY APPROVED HANGERS.

h. PENDENT-HUNG FIXTURES SHALL BE SUPPORTED DIRECTLY FROM THE STRUCTURE ABOVE USING NO LESS THAN N0. 9-GAUGE WIRE OR AN APPROVED ALTERNATE SUPPORT. THE CEILING SUSPENSION SYSTEM SHALL NOT PROVIDE ANY DIRECT SUPPORT.

i. ALL RECESSED OR DROP-IN FIXTURES SHALL BE SUPPORTED DIRECTLY FROM FIXTURE HOUSING TO THE STRUCTURE ABOVE WITH A MINIMUM OF TWO NO. 12 GAUGE WIRES LOCATED AT DIAGONALLY OPPOSITE CORNERS. LEVELLING OR POSITIONING OF FIXTURES MAY BE PROVIDED BY CEILING GRID. FIXTURE SUPPORT WIRES MAY BE SLIGHTLY LOOSE TO ALLOW THE FIXTURE TO SEAT IN THE GRID SYSTEM. FIXTURES SHALL NOT BE SUPPORTED FROM MAIN RUNNERS OR CROSS RUNNERS IF THE WEIGHT OF THE FIXTURES CAUSES TOTAL DEAD LOAD TO EXCEED THE DEFLECTION CAPABILITY OF THE CEILING SUSPENSION SYSTEM.

REVIEWED FOR CODE COMPLIANCE
oshpd
BY: M. R. Karim

16. **ADDITIONAL REQUIREMENTS:**

a. CEILINGS THAT ARE PART OF A FIRE RATED ASSEMBLY: PROVIDE A DETAIL AND DESIGN NUMBER FOR RATED CEILING ASSEMBLIES FROM AN APPROVED TESTING AGENCY. THE COMPONENTS AND INSTALLATION DETAILS CONFORM IN EVERY RESPECT WITH THE LISTED DETAIL AND NUMBER. DETAILS SHALL CLEARLY DEPICT ALL COMPONENTS, INCLUDING INSULATION MATERIALS, FRAMING AND ATTACHMENT OF THE DESIGN SO THAT THE ASSEMBLY CAN BE CONSTRUCTED AND INSPECTED ACCORDINGLY. POP RIVETS, SCREWS, OR OTHER ATTACHMENTS ARE NOT ACCEPTABLE UNLESS SPECIFICALLY DETAILED ON THE DRAWINGS AND APPROVED BY APPROVED TESTING AGENCY.

b. METAL AND OTHER PANELS: METAL PANELS AND PANELS WEIGHING MORE THAN 1/2 PSF, OTHER THAN MINERAL FIBER ACOUSTICAL TILE, ARE TO BE POSITIVELY ATTACHED TO THE CEILING SUSPENSION RUNNERS.

c. BUILDING EXIT WAYS: CEILINGS IN EXIT WAYS SHALL BE INSTALLED IN ACCORDANCE WITH SECTION 13.5.6.2.2(1) OF ASCE 7-10 AS AMENDED BY 2013 CBC SECTION 1616A.1.20. SPLICES OR INTERSECTION OF RUNNERS SHALL BE ATTACHED WITH THROUGH CONNECTORS SUCH AS POP RIVETS, SCREWS, PINS, PLATES WITH END TABS OR OTHER APPROVED CONNECTORS.

Section Title : OSHPD STANDARD SUSPENDED CEILING DETAILS			OPD No:
Sheet Title : GENERAL NOTES - PAGE 4 OF 4			CL0.03

POWER ACTUATED FASTENER (PAF) GENERAL NOTES
(INSTALLED IN CONCRETE OVER METAL DECK OR CONC SLAB)

1. POWER ACTUATED FASTENER (PAF), POWDER DRIVEN FASTENERS (PDF), POWER DRIVEN PINS (PDP), SHOT PINS ALL REPRESENT THE SAME FASTENER AND WILL HEREAFTER BE REFERRED TO AS POWER ACTUATED FASTENERS (PAF).
2. ALLOWABLE STRENGTHS SHALL BE COMPARED TO ALLOWABLE STRESS DESIGN (ASD) LEVEL DEMAND IN ACCORDANCE WITH THE 2013 CBC SECTION 1605A.3.1.
3. ALLOWABLE STRENGTHS ARE FOR A SINGLE FASTENER WHICH MEET REQUIREMENTS IN SECTIONS BELOW AND TABLES ON CL1.11. THE ALLOWABLE STRENGTHS ARE BASED UPON THE LEAST OF THE ALLOWABLE STRENGTHS LISTED IN THE ICC ESRS 1799, 2024, 2138 & 2269.
4. MINIMUM CONCRETE STRENGTH f'_c=2000 PSI FOR NORMAL WEIGHT CONCRETE AND f'_c =3000 PSI FOR ALL LIGHT WEIGHT CONCRETE UNLESS OTHERWISE NOTED.
5. POWER ACTUATED FASTENER INSTALLED THROUGH LOW FLUTES OF THE METAL DECK SHALL MEET THE REQUIREMENTS OF THE INSTALLATION CRITERIA AND SECTIONS BELOW.
6. MINIMUM EDGE DISTANCE OF 1 1/8" FROM THE EDGE OF METAL DECK WEB AND 4" FROM THE EDGE OF THE DECK.
7. STEEL DECK TO BE A MINIMUM OF 20GA.
8. CONCRETE FILL DEPTH ABOVE THE TOP OF METAL DECK SHALL BE A MINIMUM OF 3 1/4" LIGHT WEIGHT CONCRETE.
9. PAF SHALL NOT BE USED TO RESIST SEISMIC SHEAR FORCES EXCEPT AT INTERIOR NON-LOAD BEARING, NON-SHEAR WALL PARTITION WALLS (AS PERMITTED BY 2013 CBC SECTION 1908A.1.1) AND COMPONENTS EXEMPT FROM CONSTRUCTION DOCUMENT REVIEW BY 2013 CBC SECTION 1616A.1.18 (NOT PERMITTED TO TAKE SEISMIC SHEAR BY ICC-ES AC70 FOR ANY OTHER CONDITIONS). PAF SHALL NOT BE USED TO CARRY SEISMIC TENSION LOADS (EXCEPT FOR VERTICAL SEISMIC LOAD PRODUCED BY SELF WEIGHT OF THE COMPONENTS) OR IN CRACKED CONCRETE UNLESS APPROVED FOR SUCH LOADING BY OSHPD.
10. PAF SHALL NOT BE USED IN PRE-STRESSED CONCRETE UNLESS NON-DESTRUCTIVE TESTING METHODS ARE USED TO LOCATE STRAND AND REINFORCEMENT PRIOR TO FASTENER INSTALLATION.
11. PAF INSTALLATION SHALL NOT NICK OR DAMAGE EXISTING CONCRETE REINFORCEMENT. SHOULD THIS OCCUR THE RDP IN RESPONSIBLE CHARGE SHALL BE NOTIFIED IMMEDIATELY. PAF SHALL BE INSTALLED 1" CLEAR OF EXISTING REINFORCEMENT. THIS MAY REQUIRE NON-DESTRUCTIVE TESTING.
12. PAF SHALL BE INSTALLED PER CURRENT ICC-ES EVALUATION REPORTS (OR REPORTS FROM OTHER TESTING AGENCIES ACCEPTABLE TO OSHPD).
13. TESTING OF PAF SHALL BE IN ACCORDANCE WITH 2013 CBC SECTION 1913A.7. MINIMUM CONCRETE SUBSTRATE THICKNESS SHALL BE THREE TIMES THE PAF PENETRATION INTO THE CONCRETE SUBSTRATE.
14. TESTING IS NOT REQUIRED OF PAF USED TO ATTACH TRACKS OF INTERIOR NON-SHEAR WALL PARTITIONS FOR SHEAR ONLY WHERE THERE ARE AT LEAST THREE FASTENERS.
15. TOTAL ALLOWABLE LOADS IN TENSION, SHEAR OR TENSION SHEAR COMBINATIONS SHALL NOT EXCEED 90 LBS AS PERMITTED BY EXCEPTION TO ASCE 7-10 SECTION 13.4.5.
16. REFER TO NOTE 6d ON CL0.00 FOR ADDITIONAL PAF REQUIREMENTS.

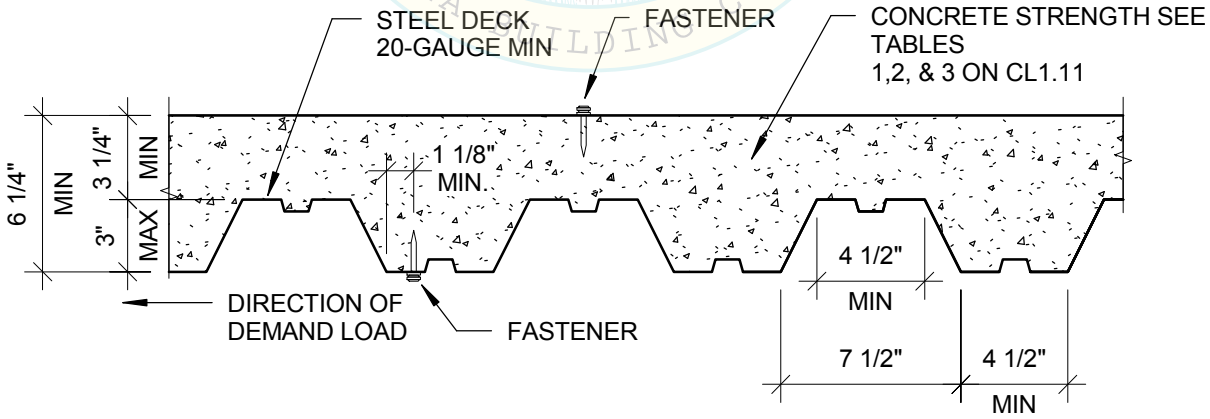

SECTION - COMPOSITE DECK

Section Title : OSHPD STANDARD SUSPENDED CEILING DETAILS		OPD No:
Sheet Title : POWER ACTUATED FASTENER (PAF) IN CONCRETE OVER METAL DECK OR CONCRETE SLAB - PAGE 1 OF 2		CL1.10

POWER ACTUATED FASTENER (PAF) ALLOWABLE STRENGTHS
(INSTALLED IN CONCRETE OVER METAL DECK OR CONC SLAB

TABLE 1

POWER ACTUATED FASTENER INSTALLED IN SAND-LIGHTWEIGHT CONCRETE THROUGH METAL DECK
(f'_c MIN=3000 PSI)

NOMINAL SHANK DIAMETER (IN)	MIN EMBED (IN)	MIN SPACING (IN)	MIN EDGE DISTANCE (IN)	TENSION (LB) (SEE NOTE 15)	SHEAR (LB) (SEE NOTE 15)
0.145 MIN	1 1/4	4	4	90	90

TABLE 2

POWER ACTUATED FASTENERS INSTALLED INTO STRUCTURAL SAND-LIGHTWEIGHT CONCRETE
(f'_c MIN=3000 PSI)

NOMINAL SHANK DIAMETER (IN)	MIN EMBED (IN)	MIN SPACING (IN)	MIN EDGE DISTANCE (IN)	TENSION (LB) (SEE NOTE 15)	SHEAR (LB) (SEE NOTE 15)
0.145 MIN	1 1/4	4	4	90	90

TABLE 3

POWER ACTUATED FASTENER INSTALLED INTO NORMAL-WEIGHT CONCRETE
(f'_c MIN=2000 PSI)

NOMINAL SHANK DIAMETER (IN)	MIN EMBED (IN)	MIN SPACING (IN)	MIN EDGE DISTANCE (IN)	TENSION (LB) (SEE NOTE 15)	SHEAR (LB) (SEE NOTE 15)
0.145 MIN	1 1/4	5.1	4	90	90

REVIEWED FOR CODE COMPLIANCE
oshpd
OPD-0002-13
BY: M. R. Karim
DATE: 10/07/2014
CALIFORNIA BUILDING CODE, 2013

Section Title : OSHPD STANDARD SUSPENDED CEILING DETAILS			OPD No:
Sheet Title : POWER ACTUATED FASTENER (PAF) IN CONCRETE OVER METAL DECK OR CONCRETE SLAB - PAGE 2 OF 2			CL1.11

POWER ACTUATED FASTENER (PAF) GENERAL NOTES (INSTALLED IN STEEL)

1. MINIMUM STEEL TENSILE STRENGTH F_u=58KSI
2. MINIMUM SPACING 1 INCH.
3. MINIMUM EDGE DISTANCE 1/2 INCH.
4. USE KNURLED SHANK.
5. POWER ACTUATED FASTENERS (PAF) SHALL BE INSTALLED PER CURRENT ICC-ES EVALUATION EVALUATION REPORTS OR REPORTS FROM OTHER TESTING AGENCIES ACCEPTABLE TO OSHPD.
6. SEE GENERAL NOTE 6d & 6e ON CL0.00 FOR PAF REQUIREMENTS & ATTACHMENT TO STEEL.
7. POWER ACTUATED FASTENER (PAF), POWEDER DRIVEN FASTENERS (PDF), POWER DRIVEN PINS (PDP), SHOT PINS, ARE COMMON NOMINCLATURES THAT ALL REPRESENT THE SAME FASTENER DESCRIBED HERE IN.
8. ALLOWABLE STRENGTHS SHALL BE COMPARED TO ALLOWABLE STRESS DESIGN (ASD) LEVEL DEMAND IN ACCORDANCE WITH THE 2013 CBC SECTION 1605A.3.1.
9. ALLOWABLE STRENGTHS ARE FOR SINGLE FASTENERS, WHICH MEET THE REQUIREMENTS PER NOTES ABOVE. THE ALLOWABLE STRENGTHS ARE BASED UPON THE LEAST OF THE ALLOWABLE STRENGTHS LISTED IN THE ESRS 1799, 2024, 2138 & 2269.
10. TOTAL ALLOWABLE TENSION, SHEAR OR TENSION SHEAR COMBINATION SHALL NOT EXCEED 250 LBS. AS PERMITTED BY THE EXCEPTION TO ASCE 7-10 SECTION 13.4.5.

REVIEWED FOR CODE COMPLIANCE
osfpd
OPD-0002-13
BY: M. R. Karim
DATE: 10/07/2014
CALIFORNIA BUILDING CODE, 2013

NOMINAL SHANK DIAMETER (IN)	STEEL THICKNESS (IN)							
	3/16		1/4		3/8		1/2	
	TENSION (LB)	SHEAR (LB)	TENSION (LB)	SHEAR (LB)	TENSION (LB)	SHEAR (LB)	TENSION (LB)	SHEAR (LB)
0.145 MIN	155	250	230	250	250	250	190	220

Section Title : OSHPD STANDARD SUSPENDED CEILING DETAILS		OPD No:
Sheet Title : POWER ACTUATED FASTENER (PAF) IN STEEL		CL1.12

POWER ACTUATED FASTENER (PAF) GENERAL NOTES (INSTALLED IN CONCRETE FILLED METAL B-DECK)

1. POWER ACTUATED FASTENER (PAF), POWER DRIVEN FASTENERS (PDF), POWER DRIVEN PINS (PDP), SHOT PINS ALL REPRESENT THE SAME FASTENER AND WILL HEREAFTER BE REFERRED TO AS POWER ACTUATED FASTENERS (PAF).
2. ALLOWABLE STRENGTHS SHALL BE COMPARED TO ALLOWABLE STRESS DESIGN (ASD) LEVEL DEMAND IN ACCORDANCE WITH THE 2013 CBC SECTION 1605A.3.1.
3. ALLOWABLE STRENGTHS ARE FOR A SINGLE FASTENER WHICH MEET REQUIREMENTS PER SECTION BELOW AND TABLES ON CL1.14 THE ALLOWABLE STRENGTHS ARE BASED UPON THE LEAST OF THE ALLOWABLE STRENGTHS LISTED IN ICC ESRS 2024, 2138, & 2269.
4. MINIMUM CONCRETE STRENGTH f'c = 3000 PSI FOR NORMAL WEIGHT CONCRETE AND f'c = 3000 PSI FOR ALL LIGHT WEIGHT CONCRETE UNLESS NOTED OTHERWISE.
5. POWER ACTUATED FASTENER INSTALLED THROUGH LOW FLUTES OF THE METAL DECK SHALL MEET THE REQUIREMENTS OF THE INSTALLTION CRITERIA AND SECTION BELOW.
6. MINIMUM EDGE DISTANC7: OF 7/8" FROM THE EDGE OF METAL DECK WEB AND 4" FROM THE EDGE OF THE DECK.
7. STEEL DECK TO BE A MINIMUM OF 20 GA. B-DECK.
8. CONCRETE FILL DEPTH ABOVE THE TOP OF METAL DECK MUST BE A MINIMUM OF 2 1/2" AT NORMAL WEIGHT OR LIGHT WEIGHT CONCRETE COMPOSITE METAL DECK.
9. PAF SHALL NOT BE USED TO RESIST SEISMIC SHEAR FORCES EXCEPT AT INTERIOR NON-LOAD BEARING, NON-SHEAR WALL PARTITION WALLS (AS PERMITTED BY 2013 CBC 1908A.1.1) AND COMPONENTS EXEMPT FROM CONSTRUCTION DOCUMENT REVIEW BY 2013 CBC SECTION 1616A.1.18 (NOT PERMITTED TO TAKE SEISMIC SHEAR BY ICC-ES AC70 FOR ANY OTHER CONDITIONS). PAF SHALL NOT BE USED TO CARRY SEISMIC TENSION LOADS (EXCEPT FOR VERTICAL SEISMIC LOAD PRODUCED BY SELF WEIGHT OF THE COMPONENTS) OR IN CRACKED CONCRETE UNLESS APPROVED FOR SUCH LOADING BY OSHPD.
10. PAF SHALL NOT BE USED IN PRE-STRESSED CONCRETE UNLESS NON-DESTRUCTIVE TESTING METHODS ARE USED TO LOCATE STRAND & REINFORCING PRIOR TO FASTENER INSTALLATION.
11. PAF INSTALLATION SHALL NOT NICK OR DAMAGE EXISTING CONCRETE REINFORCEMENT. SHOULD THIS OCCUR THE RDP IN RESPONSIBLE CHARGE SHALL BE NOTIFIED IMMEDIATELY. PAF SHALL BE INSTAL". CLEAR OF EXISTING REINFORCEMENT. THIS MAY REQUIRE NON-DESTRUCTIVE TESTING.
12. PAF SHALL BE INSTALLED PER CURRENT ICC-ES EVALUATION REPORTS (OR REPORTS FROM OTHER TESTING AGENCIES ACCEPTABLE TO OSHPD).
13. TESTING OF PAF SHALL BE PER 2013 CBC SECTION 1913A.7. MINIMUM CONCRETE SUBSTRATE THICKNESS IS THREE TIMES THE PAF PENETRATION INTO THE CONCRETE SUBSTRATE.
14. TESTING IS NOT REQUIRED OF PAF USED TO ATTACH TRACKS OF INTERIOR NON-SHEAR WALL PARTITIONS FOR SHEAR ONLY WHERE THERE ARE AT LEAST THREE FASTENERS.
15. TOTAL ALLOWABLE LOADS IN TENSION, SHEAR OR TENSION SHEAR COMBINATIONS SHALL NOT EXCEED 90 LBS AS PERMITTED BY EXCEPTION TO THE ASCE 7-10 SECTION 13.4.5.
16. REFER TO NOTE 6d ON CL0.00 FOR ADDITIONAL PAF REQUIREMENTS.

STATE OF CALIFORNIA BUILDING CODE, 2013
OPD-0002-13
DATE: 10/07/2014

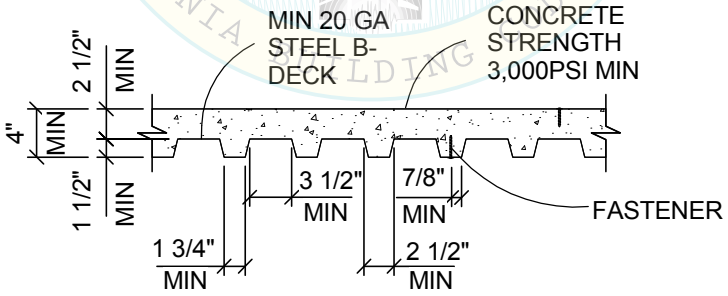

Section Title : OSHPD STANDARD SUSPENDED CEILING DETAILS			OPD No:
Sheet Title : POWER ACTUATED FASTENER (PAF) GENERAL NOTES (INSTALLED IN CONCRETE FILLED METAL B DECK)			CL1.13

POWER ACTUATED FASTENER (PAF) ALLOWABLE STRENGTHS
(INSTALLED IN CONCRETE FILLED B-DECK)

TABLE 1
POWER ACTUATED FASTENER INSTALLED TO THE UNDERSIDE OF NORMAL WEIGHT OR SAND-LIGHTWEIGHT CONCRETE THROUGH B-DECK (f'c MIN = 3000 PSI)

NOMINAL SHANK DIAMETER (IN)	MIN. EMBED (IN)	MIN. SPACING (IN)	MIN. EDGE DISTANCE (IN)	TENSION (LB) SEE NOTE 15	SHEAR (LB) (SEE NOTE 15)
0.157 MIN	1"	4"	4"	90	90

REVIEWED FOR CODE COMPLIANCE
oshpd
OPD-0002-13
BY: M. R. Karim
DATE: 10/07/2014
CALIFORNIA BUILDING CODE, 2013

Section Title : OSHPD STANDARD SUSPENDED CEILING DETAILS			OPD No:
Sheet Title : POWER ACTUATED FASTENER (PAF) ALLOWABLE STRENGTHS (INSTALLED IN CONCRETE FILLED METAL B DECK)			CL1.14

EXPANSION ANCHOR GENERAL NOTES

1. ALLOWABLE STRENGTHS SHALL BE COMPARED TO ALLOWABLE STRESS DESIGN (ASD) LEVEL DEMAND IN ACCORDANCE WITH THE 2013 CBC SECTION 1605A.3.1.
2. ALLOWABLE STRENGTHS ARE FOR SINGLE ANCHORS WHICH MEET MIN. REQUIREMENTS IN ACCORDANCE WITH THE TABLE & SECTION BELOW.
3. MINIMUM CONCRETE STRENGTH f'c=3000 PSI.
4. EXPANSION ANCHORS INSTALLED THROUGH UPPER OR LOWER FLUTES OF METAL DECK SHALL MEET THE REQUIREMENTS OF THE INSTALLATION CRITERIA AND SECTION BELOW.
5. STEEL DECK TO BE MIN. 20 GA. W-DECK.
6. MINIMUM CONCRETE FILL DEPTH ABOVE THE TOP OF METAL DECK IN ACCORDANCE WITH THE SECTION AND INSTALLATION CRITERIA BELOW.
7. EXPANSION ANCHORS SHALL NOT BE USED IN PRE-STRESSED CONCRETE UNLESS NON-DESTRUCTIVE TESTING METHODS ARE USED TO LOCATE STRAND & REINFORCING PRIOR TO ANCHOR INSTALLATION.
8. EXPANSION ANCHOR INSTALLATION SHALL NOT NICK OR DAMAGE EXISTING REINFORCEMENT. SHOULD THIS OCCUR THE RDP IN RESPONSIBLE CHARGE SHALL BE NOTIFIED IMMEDIATELY. EXPANSION ANCHORS SHALL BE INSTALLED 1" CLEAR OF EXISTING REINFORCEMENT.
9. EXPANSION ANCHORS SHALL BE INSTALLED PER CURRENT ICC-ES EVALUATION REPORT OR REPORT FROM OTHER TESTING AGENCY ACCEPTABLE TO OSHPD.
10. TESTING OF EXPANSION ANCHORS SHALL BE IN ACCORDANCE WITH 2013 CBC SECTION 1913A.7.
11. EXPANSION ANCHORS SHALL BE INSTALLED TO COMPLY WITH THE MINIMUM SLAB THICKNESS REQUIREMENTS ESTABLISHED BY THE ICC-ESR FOR THE SPECIFIED ANCHOR.
12. REFER TO NOTE 6c ON CL0.00 FOR ADDITIONAL EXPANSION ANCHOR REQUIREMENTS.
13. ALL VALUES IN TABLES ARE FOR CRACKED CONCRETE & INCLUDE REDUCTION BASED ON ACI 318-11 SECTION D.3.3.4.4 REQUIREMENTS. THE ALLOWABLE STRENGTHS ARE BASED UPON THE LEAST OF THE ALLOWABLE STRENGTHS CALCULATED USING THE ICC ESRS 1917, 2427, 2502 & 3037 AND USING AN ALLOWABLE STRENGTH CONVERSION FACTOR OF 1.4.
14. ALL VALUES IN THE TABLE REFLECT ALLOWABLE STRENGTHS WITH 20% STRESS INCREASE FOR LOAD COMBINATIONS WITH OVERSTRENGTH FACTOR IN ACCORDANCE WITH ASCE 7-10 SECTION 12.4.3.3.

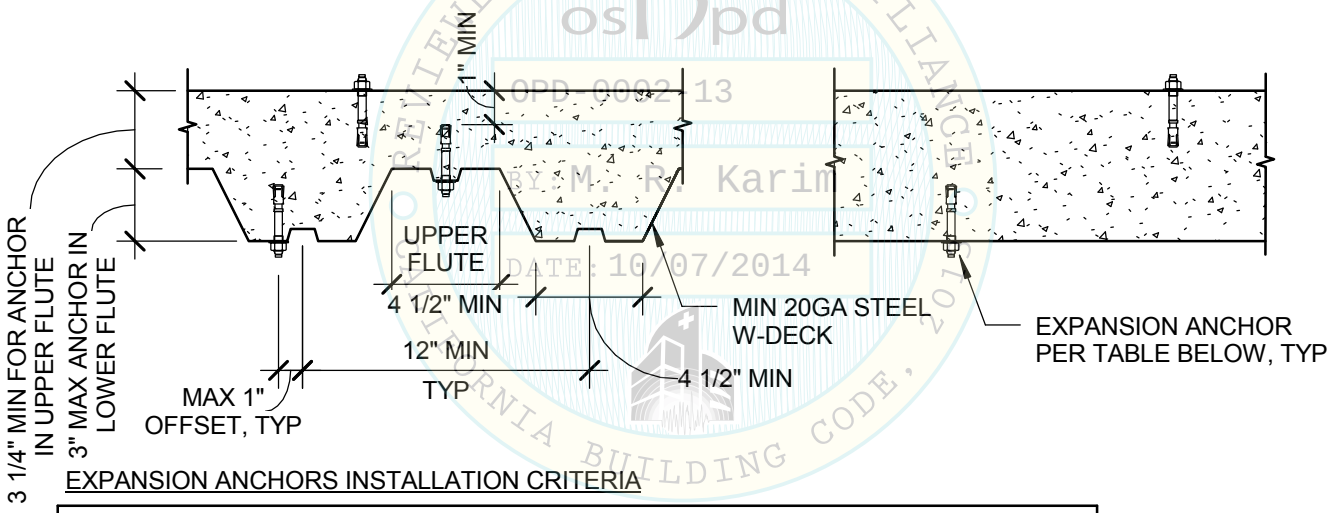

OSHPD
OPD-0002-13
REVIEWED BY M. R. Karim
DATE: 10/07/2014
REVIEWED FOR CODE COMPLIANCE WITH APPLICABLE CALIFORNIA BUILDING CODE, 2010

EXPANSION ANCHORS INSTALLATION CRITERIA

	NOMINAL ANCHOR DIAMETER (IN)				
	3/8	1/2		5/8	
EFFECTIVE MIN EMBEDMENT (IN)	2	2 1/4	3 1/4	3 1/8	4
MIN MEMBER THICKNESS NWC SLAB OR BEAM ONLY (IN)	4.5	4.5	6	6	7 1/4
MIN ANCHOR SPACING (3 x EMBED) (IN)	6 3/4	6 3/4	9 3/4	9 3/8	12
MIN EDGE DISTANCE (IN)	6	7	7 1/2	6 1/2	8 3/4

Section Title : OSHPD STANDARD SUSPENDED CEILING DETAILS

OPD No:

Sheet Title : EXPANSION ANCHOR GENERAL NOTES

CL1.20

EXPANSION ANCHOR ALLOWABLE STRENGTHS

TABLE 1

EXPANSION ANCHORS INSTALLED IN TO THE UNDERSIDE OF STRUCTURAL SAND-LIGHTWEIGHT CONCRETE (f'_c MIN=3000 PSI) OVER METAL DECK

ANCHOR DIA. (IN)	EMBED (IN)	SHEAR (LB)	TENSION (LB)
3/8	2	747	604
1/2	2 1/4	1029	610
1/2	3 1/4	1173	1086
5/8	3 1/4	1353	836
5/8	4 1/4	2477	1941

TABLE 2

EXPANSION ANCHORS INSTALLED IN TO THE TOP OF STRUCTURAL SAND-LIGHTWEIGHT CONCRETE (f'_c MIN=3000 PSI) OVER METAL DECK

ANCHOR DIA. (IN)	EMBED (IN)	SHEAR (LB)	TENSION (LB)
3/8	2	806	624
1/2	2 1/4	948	660

TABLE 3

EXPANSION ANCHORS INSTALLED IN NORMAL WEIGHT CONCRETE (f'_c MIN=3000 PSI)

ANCHOR DIA. (IN)	EMBED (IN)	SHEAR (LB)	TENSION (LB)
3/8	2	1020	961
1/2	2 1/4	1580	1101
1/2	3 1/4	2591	2003
5/8	3 1/4	2579	2150
5/8	4 1/4	3772	3113

REVIEWED FOR CODE COMPLIANCE
oshpd
OPD-0002-13
BY: M. R. Karim
DATE: 10/07/2014
CALIFORNIA BUILDING CODE, 2013

Section Title : OSHPD STANDARD SUSPENDED CEILING DETAILS		OPD No:
Sheet Title : EXPANSION ANCHOR ALLOWABLE STRENGTHS		CL1.21

EXPANSION ANCHOR GENERAL NOTES

1. ALLOWABLE STRENGTHS SHALL BE COMPARED TO ALLOWABLE STRESS DESIGN (ASD) LEVEL DEMAND IN ACCORDANCE WITH THE 2013 CBC SECTION 1605A.3.1.
2. ALLOWABLE STRENGTHS SHOWN IN TABLES ON CL1.23 ARE FOR SINGLE ANCHORS WHICH MEET MIN. REQUIREMENTS PER TABLE AND SECTION BELOW.
3. MINIMUM CONCRETE STRENGTH f'c = 3000 PSI.
4. EXPANSION ANCHORS INSTALLED THROUGH LOWER FLUTES OF METAL DECK SHALL MEET THE REQUIREMENTS OF THE INSTALLATION CRITERIA AND SECTION BELOW.
5. STEEL DECK TO BE MIN 20 GA. B-DECK.
6. MINIMUM CONCRETE FILL DEPTH ABOVE THE TOP OF THE METAL DECK PER SECTION AND INSTALLATION CRITERIA BELOW.
7. EXPANSION ANCHORS SHALL NOT BE USED IN PRE-STRESSED CONCRETE UNLESS NON-DESTRUCTIVE TESTING METHODS ARE USED TO LOCATE STRAND & REINFORCING PRIOR TO ANCHOR INSTALLATION.
8. EXPANSION ANCHOR INSTALLATION SHALL NOT NICK OR DAMAGE EXISTING REINFORCEMENT. SHOULD THIS OCCUR, THE RDP IN RESPONSIBLE CHARGE SHALL BE NOTIFIED IMMEDIATELY. EXPANSION ANCHORS SHALL BE INSTA". CLEAR OF EXISTING REINFORCEMENT.
9. EXPANSION ANCHORS SHALL BE INSTALLED PER CURRENT ICC-ES EVALUATION REPORT OR REPORT FROM OTHER TESTING AGENCY ACCEPTABLE TO OSHPD.
10. TESTING OF EXPANSION ANCHORS SHALL BE PER 2013 CBC SECTION 1913A.7.
12. REFER TO NOTE 6c ON CL0.00 FOR ADDITIONAL EXPANSION ANCHOR REQUIREMENTS.
13. ALL VALUES IN TABLES ARE FOR CRACKED CONCRETE & INCLUDE REDUCTION BASED ON ACI 318-11 D.3.3.4.4 REQURIEMENTS. THE ALLOWABLE STRENGTHS ARE BASED UPON THE LEAST OF THE ALLOWABLE STRENGTHS CALCULATED USING THE ICC ESRS 1917 AND 2502 AND USING AN α FACTOR OF 1.4.
14. ALL VALUES IN TABLE REFLECT ALLOWABLE STRENGTHS WITH 20% ALLOWABLE STRESS INCREASE FOR LOAD COMBINATIONS WITH OVERSTRENGTH FACTOR IN ACCORDANCE WITH ASCE 7-10 SECTION 12.4.3.3.

REVIEWED FOR CODE COMPLIANCE
oshpd
OPD-0002-13
BY: M.R. Karim
DATE: 10/07/2014
CALIFORNIA BUILDING CODE, 2013

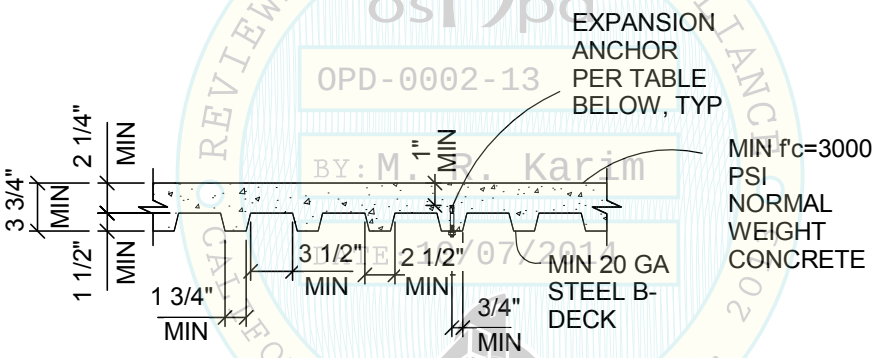

SECTION - COMPOSITE B-DECK

	ANCHOR DIAMETER	EFFECTIVE EMBEDMENT	MIN EDGE DISTANCE	MIN SPACING
UNDERSIDE INSTALLATION **	3/8"	2"	6"	6 3/4"
	1/2"	2"	7"	6 3/4"

** UNDERSIDE APPLICATION ONLY.

Section Title : OSHPD STANDARD SUSPENDED CEILING DETAILS

OPD No:

Sheet Title : EXPANSION ANCHOR GENERAL NOTES (INSTALLED IN CONCRETE FILLED METAL B DECK)

CL1.22

EXPANSION ANCHOR ALLOWABLE STRENGTHS INTO B-DECK

TABLE 1
EXPANSION ANCHORS INSTALLED INTO THE UNDERSIDE OF NORMAL WEIGHT CONCRETE THROUGH B-DECK (f'c MIN = 3000 PSI)

ANCHOR DIAMETER (IN)	EMBED (IN)	SHEAR (LB)	TENSION (LB)
3/8"	2	997	522
1/2"	2	1440	600

** UNDERSIDE APPLICATION ONLY. SEE NOTE ON CL1.22.

REVIEWED FOR CODE COMPLIANCE
oshpd
OPD-0002-13
BY: M. R. Karim
DATE: 10/07/2014
CALIFORNIA BUILDING CODE, 2013

Section Title : OSHPD STANDARD SUSPENDED CEILING DETAILS		OPD No:
Sheet Title : EXPANSION ANCHOR ALLOWABLE STRENGTHS (INSTALLED IN CONCRETE FILLED METAL B DECK)		CL1.23

SHEET METAL SCREW (SMS) GENERAL NOTES

1. THE ALLOWABLE STRENGTHS ARE BASED UPON THE AISI S100-07/S2-10 AND ARE LIMITED BY ACTUAL TESTED STRENGTH OF THE SCREWS IN TENSION AND SHEAR.
2. THE ALLOWABLE STRENGTHS ARE BASED UPON THE LEAST OF THE AVERAGE TESTED TENSILE AND SHEAR STRENGTHS TABULATED FROM ICC ESR'S 1976, 2196, 1730, 1408, AND THE STEEL STUD MANUFACTURER'S ASSOCIATION (SSMA). FASTENER TYPES AND SIZES APPLY TO NON-PROPRIETARY FASTENER TYPES AND SIZES, AND DOES NOT ENDORSE A SPECIFIC MANUFACTURER. WHERE PROPRIETARY FASTENERS ARE SPECIFIED, NO EXCEPTIONS ARE TAKEN TO THE USE OF MANUFACTURER SPECIFIC VALUES THAT ARE BASED UPON THE AISI S100-07/S2-10, SECTION E4. ALL SCREW FASTENERS SHALL SATISFY ICC-ES AC118-ACCEPTANCE CRITERIA FOR SELF TAPPING SCREW FASTENERS.
3. TABLE 1 REPRESENTS ALLOWABLE TENSION AND SHEAR STRENGTHS FOR NON-PROPRIETARY SHEET METAL SCREWS FOR STEEL TO STEEL CONNECTIONS.
4. TABLES 2 AND 3 REPRESENT ALLOWABLE TENSION AND SHEAR STRENGTHS THAT INCORPORATE THE EFFECTS OF EITHER ONE (1) OR TWO (2) LAYERS OF 5/8" GYPSUM BOARD BETWEEN FASTENER HEAD AND CONNECTING STEEL MATERIAL.
5. IN ORDER TO USE THE VALUES IN TABLES 1, 2, AND 3, THE ATTACHMENTS SHALL BE DETAILED IN SUCH A WAY AS TO AVOID PRYING AND THE STUDS MUST BE STABILIZED WITH FULL-DEPTH BLOCKING WITH CONTINUOUS STRAPS ALONG THE FLANGES OR WITH BACKING BARS.
6. PENETRATION OF SCREWS THROUGH JOINED MATERIAL SHOULD NOT BE LESS THAN THREE (3) EXPOSED THREADS.
7. STEEL THICKNESSES JOINED ARE ASSUMED TO BE THE SAME. IF DISSIMILAR THICKNESSES ARE BEING CONNECTED, THE VALUE FOR THE THINNER PART JOINED SHALL BE USED.
8. THE MINIMUM SPACING BETWEEN CENTERS OF FASTENERS SHALL NOT BE LESS THAN 3 X FASTENER DIAMETER. THE MINIMUM EDGE DISTANCE FROM THE CENTER OF A FASTENER TO THE EDGE OF ANY PART SHALL NOT BE LESS THAN 1.5 X FASTENER DIAMETER. WHERE THE END DISTANCE IS PARALLEL TO THE FORCE ON THE FASTENER, THE NOMINAL SHEAR STRENGTH SHALL BE LIMITED BY SECTION E4.3.2 OF THE AISI S100-07/S2-10.
9. GALVANIZED METAL STUDS, TRACK AND SHEET STEEL SHALL CONFORM TO ASTM A653-09a MATERIAL (OR OTHER EQUIVALENT ASTM LISTED MATERIALS IN THE AISI S100-07/S2-10, SECTION A2.1) WITH A MINIMUM YIELD STRENGTH OF 33 KSI FOR 43 MIL (18 GA) AND LIGHTER, AND MINIMUM YIELD STRENGTH OF 50 KSI FOR 54 MIL (16 GA) & HEAVIER.
10. WHERE VALUES ARE NOT GIVEN, SUCH COMBINATIONS OF SCREW SIZES & MATERIAL THICKNESS ARE NOT RECOMMENDED.
11. IF THE ATTACHMENT DETAILS RESULT IN PRYING WITH A MOMENT ARM NOT TO EXCEED 1 5/8", THE VALUES IN TABLE 4 MAY BE USED. IF THE ATTACHMENT DETAILS RESULT IN PRYING WITH A MOMENT ARM THAT EXCEEDS 1 5/8", THE REGISTERED DESIGN PROFESSIONAL IN RESPONSIBLE CHARGE OF THE PROJECT SHALL DETERMINE THE ALLOWABLE VALUES AND SUBMIT SUBSTANTIATION FOR THEM TO OSHPD FOR REVIEW.
12. INTERACTION OF SHEAR AND TENSION SHALL BE BASED ON $T/T_{ALL} + V/V_{ALL} \leq 1.0$.
13. REFER TO NOTE 6A ON CL0.00 FOR ADDITIONAL SHEET METAL SCREW REQUIREMENTS.

REVIEWED FOR CODE COMPLIANCE
OSHPD PROJECT REVIEWER
M. R. Karim
CALIFORNIA BUILDING CODE 2010

Section Title : OSHPD STANDARD SUSPENDED CEILING DETAILS		OPD No:
Sheet Title : SHEET METAL SCREW GENERAL NOTES		CL1.30

SHEET METAL SCREW (SMS) ALLOWABLE STRENGTHS

TABLE 1

SHEET METAL SCREW ALLOWABLE STRENGTHS FOR STEEL TO STEEL CONNECTIONS.

FASTENER SIZE											
Fy (KSI)	MIL (STEEL GA)	NO. 14		NO. 12		NO. 10		NO. 8		NO. 6	
		0.250 IN		0.216 IN		0.190 IN		0.164 IN		0.138 IN	
		SHEAR (LB)	TENSION (LB)	SHEAR (LB)	TENSION (LB)	SHEAR (LB)	TENSION (LB)	SHEAR (LB)	TENSION (LB)	SHEAR (LB)	TENSION (LB)
50	97 (12)	704	275	525	205	-	-	-	-	-	-
	68 (14)	704	275	525	205	405	159	-	-	-	-
	54 (16)	613	261	525	205	405	159	303	118	-	-
33	43 (18)	302	144	280	124	263	109	244	94	165	79
	33 (20)	-	-	-	-	177	84	164	72	151	61

NOTES:

1. SEE GENERAL NOTES ON CL1.30 FOR ADDITIONAL INFORMATION .
2. WHERE ONE OR TWO LAYERS OF GYP BOARD OCCURS BETWEEN STEEL SURFACES, THE ALLOWABLE VALUES OF TABLE 2 & 3 SHALL BE USED.
3. ALLOWABLE STRENGTH VALUES DO NOT ACCOUNT FOR EFFECTS FROM PRYING. THE RDP IN RESPONSIBLE CHARGE OF THE PROJECT SHALL PROVIDE ADEQUATE BLOCKING/RESTRAINT TO PREVENT PRYING ACTION. WHERE PRYING OCCURS, THE VALUES AND CONSTRAINTS OF TABLE 4 SHALL BE USED.

OPD-0002-13
DATE: 10/07/2014

TABLE 2 - NON-PRYING CONDITION

SHEET METAL SCREW ALLOWABLE STRENGTHS FOR STEEL TO STEEL CONNECTIONS.
WITH ONE LAYER OF 5/8" GYP BOARD BETWEEN STEEL SURFACES.

FASTENER SIZE											
Fy (KSI)	MIL (STEEL GA)	NO. 14		NO. 12		NO. 10		NO. 8		NO. 6	
		0.250 IN		0.216 IN		0.190 IN		0.164 IN		0.138 IN	
		SHEAR (LB)	TENSION (LB)	SHEAR (LB)	TENSION (LB)	SHEAR (LB)	TENSION (LB)	SHEAR (LB)	TENSION (LB)	SHEAR (LB)	TENSION (LB)
50	97 (12)	226	275	180	205	-	-	-	-	-	-
	68 (14)	226	275	180	205	140	159	-	-	-	-
	54 (16)	226	261	180	205	140	159	120	118	-	-
33	43 (18)	226	144	180	124	140	109	120	94	60	79
	33 (20)	-	-	-	-	100	84	80	72	60	61

NOTES:

1. SEE GENERAL NOTES ON CL1.30 FOR ADDITIONAL INFORMATION .
2. ALLOWABLE STRENGTH VALUES DO NOT ACCOUNT FOR EFFECTS FROM PRYING. THE RDP IN RESPONSIBLE CHARGE OF THE PROJECT SHALL PROVIDE ADEQUATE BLOCKING/RESTRAINT TO PREVENT PRYING ACTION. WHERE PRYING OCCURS, THE VALUES AND CONSTRAINTS OF TABLE 4 SHALL BE USED.

Section Title : OSHPD STANDARD SUSPENDED CEILING DETAILS

OPD No:

Sheet Title : SHEET METAL SCREW ALLOWABLE STRENGTHS - PAGES 1 OF 2

CL1.31

SHEET METAL SCREW (SMS) ALLOWABLE STRENGTHS (CONTINUED)

TABLE 3 - NON-PRYING CONDITION

SHEET METAL SCREW ALLOWABLE STRENGTHS FOR STEEL TO STEEL CONNECTIONS WITH TWO LAYERS OF 5/8" GYP BOARD BETWEEN STEEL SURFACES.

Fv (KSI)	MIL (STEEL GA)	FASTENER SIZE									
		NO. 14		NO. 12		NO. 10		NO. 8		NO. 6	
		0.250 IN		0.216 IN		0.190 IN		0.164 IN		0.138 IN	
		SHEAR (LB)	TENSION (LB)	SHEAR (LB)	TENSION (LB)	SHEAR (LB)	TENSION (LB)	SHEAR (LB)	TENSION (LB)	SHEAR (LB)	TENSION (LB)
50	97 (12)	166	275	130	205	-	-	-	-	-	-
	68 (14)	166	275	130	205	100	159	-	-	-	-
	54 (16)	166	261	130	205	100	159	80	118	-	-
33	43 (18)	166	144	130	124	100	109	80	94	50	79
	33 (20)	-	-	-	-	70	84	50	72	40	61

NOTES:
1. SEE GENERAL NOTES ON CL1.30 FOR ADDITIONAL INFORMATION .
2. ALLOWABLE STRENGTH VALUES DO NOT ACCOUNT FOR EFFECTS FROM PRYING. THE RDP IN RESPONSIBLE CHARGE TO PROVIDE ADEQUATE BLOCKING/RESTRAINT TO PREVENT PRYING ACTION. WHERE PRYING OCCURS, THE VALUES AND CONSTRAINTS OF TABLE 4 SHALL BE USED.

TABLE 4 - PRYING CONDITION (SEE DETAILS BELOW - STRUT CAN BE HORIZONTAL OR VERTICAL)

SHEET METAL SCREW ALLOWABLE STRENGTHS FOR STEEL TO STEEL CONNECTIONS WITH ONE OR TWO LAYERS OF 5/8" GRP BOARD BETWEEN STEEL SURFACES AND MAXIMUM PRYING MOMENT ARM OF 1 5/8"

Fv (KSI)	MIL (STEEL GA)	FASTENER SIZE									
		NO. 14		NO. 12		NO. 10		NO. 8		NO. 6	
		0.250 IN		0.216 IN		0.190 IN		0.164 IN		0.138 IN	
		SHEAR (LB)	TENSION (LB)	SHEAR (LB)	TENSION (LB)	SHEAR (LB)	TENSION (LB)	SHEAR (LB)	TENSION (LB)	SHEAR (LB)	TENSION (LB)
50	97 (12)	40	275	30	205	-	-	-	-	-	-
	68 (14)	40	275	30	205	25	159	-	-	-	-
	54 (16)	40	261	30	205	25	159	20	118	-	-
33	43 (18)	40	144	30	124	25	109	20	94	10	79
	33 (20)	-	-	-	-	15	84	15	72	10	61

REVIEWED FOR CODE COMPLIANCE
OSHPD
OPD-0002-13
BY: M. R. Karim
DATE: 10/07/2014
CALIFORNIA BUILDING CODE 2013

NOTES:
1. SEE GENERAL NOTES ON CL1.30 FOR ADDITIONAL INFORMATION.
2. ALLOWABLE STRENGTH VALUES LISTED IN TABLE 4 ARE BASED UPON A LIMITED TEST ASSEMBLY WHERE THE ORIGIN AND DIRECTION OF THE LOAD RESULTS IN PRYING UPON THE FASTENER. THE MAGNITUDE OF THIS PRYING EFFECT SHALL BE LIMITED TO A MOMENT ARM OF 1 5/8" FROM THE FASTENER.

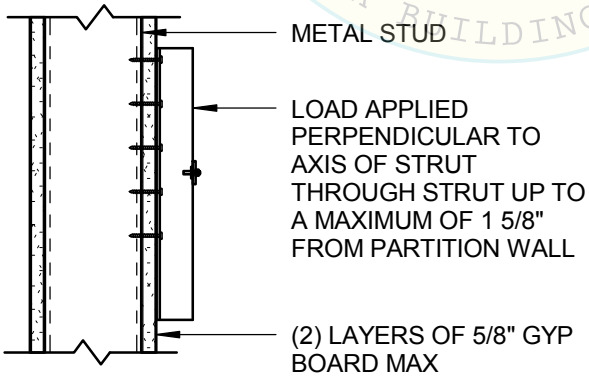

WALL ELEV WITH LOAD APPLIED THROUGH STRUT

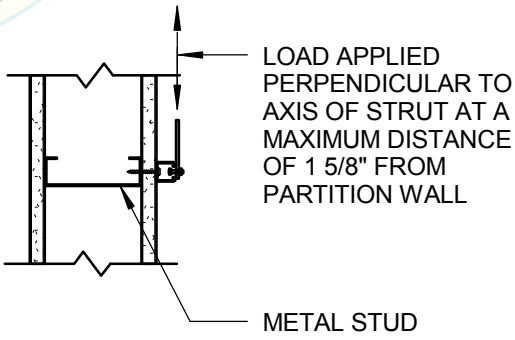

PLAN VIEW

Section Title : OSHPD STANDARD SUSPENDED CEILING DETAILS	OPD No:
Sheet Title : SHEET METAL SCREW ALLOWABLE STRENGTHS - PAGES 2 OF 2	CL1.32

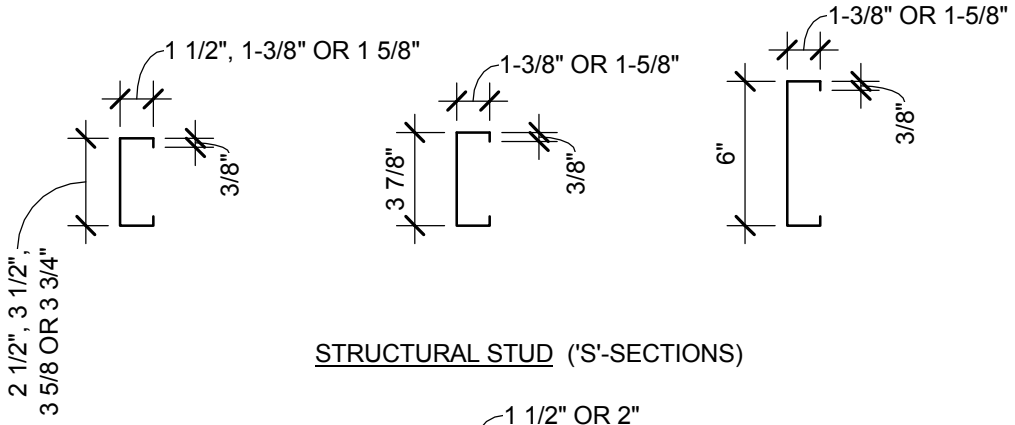

STRUCTURAL STUD ('S'-SECTIONS)

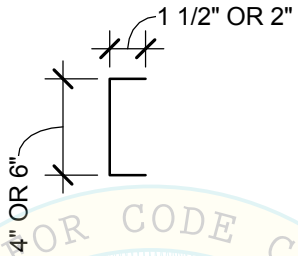

STRUCTURAL TRACK ('T'-SECTIONS)

REVIEWED FOR CODE COMPLIANCE
OPD-0002-13
BY: M. R. Karim
DATE: 10/07/2014
CALIFORNIA BUILDING CODE, 2013

DESIGNATION THICKNESS (MILS)	REFERENCE ONLY GAUGE NO.
18	25
27	22
33	20
43	18
54	16
68	14
97	12
118	10

NOTE:

1. F_y = 50KSI FOR 54 MIL (16GA) & THICKER SECTIONS, AND F_y = 33KSI FOR SECTIONS UP TO & INCLUDING 43 MI (18GA).
2. SIZE AND THICKNESS ARE CONSIDERED MINIMUMS.
3. STRUCTURAL STUDS SHALL NOT BE PUNCHED UNLESS NOTED OTHERWISE.

Section Title : OSHPD STANDARD SUSPENDED CEILING DETAILS		OPD No:
Sheet Title : METAL STUD PROFILES		CL1.40

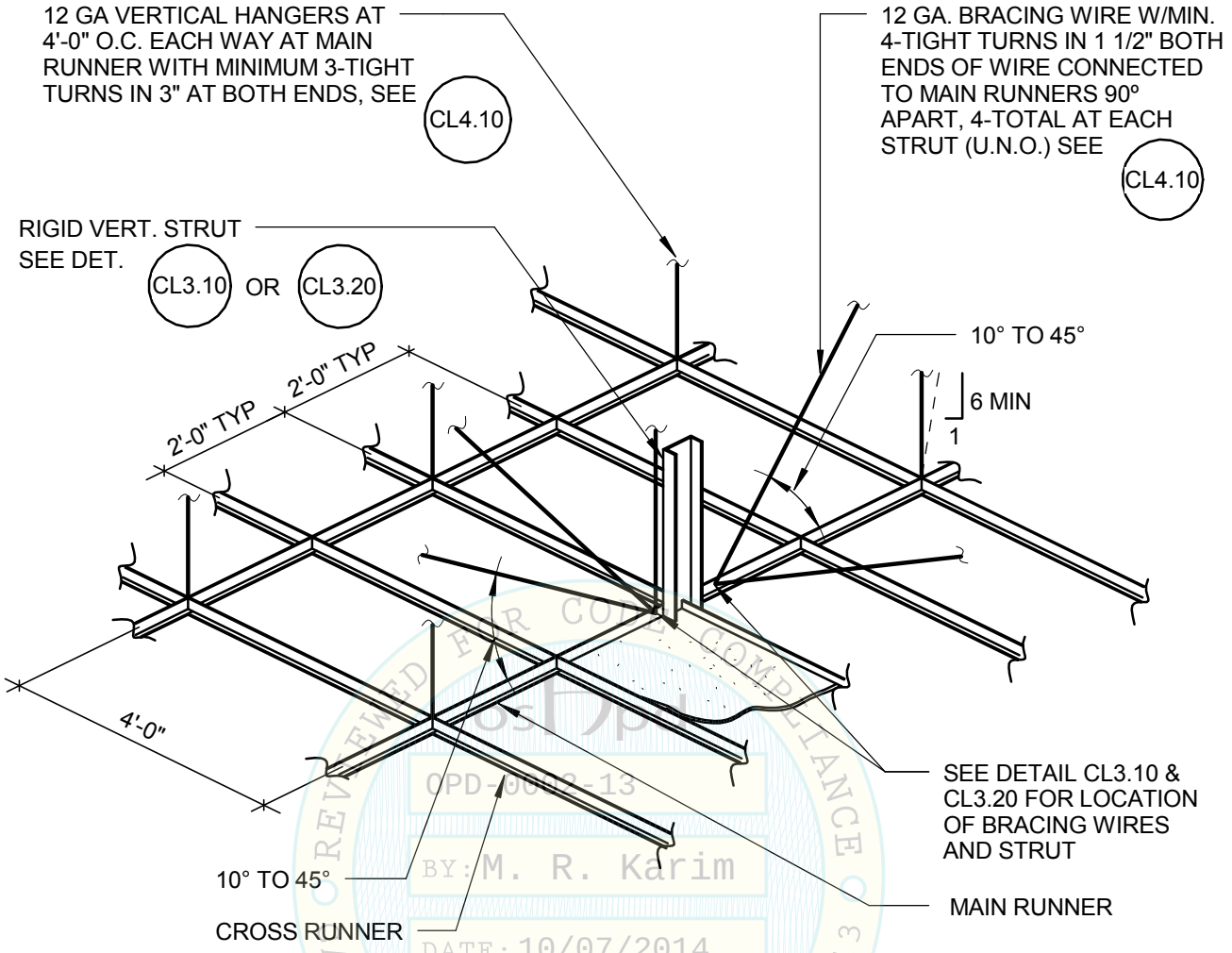

REVIEWED FOR CODE COMPLIANCE
OPD-0002-13
BY: M. R. Karim
DATE: 10/07/2014
CALIFORNIA BUILDING CODE, 2013

NOTES:

1. SEE SUSPENDED CEILING NOTES #13 & #14 ON CL0.02
2. STRUTS SHALL NOT REPLACE HANGER WIRES.
3. FOR CONDITIONS AT CORRIDOR SEE DRAWING NO. CL2.30

Section Title : OSHPD STANDARD SUSPENDED CEILING DETAILS		OPD No:
Sheet Title : SUSPENDED CEILING BRACING ASSEMBLY		CL2.10

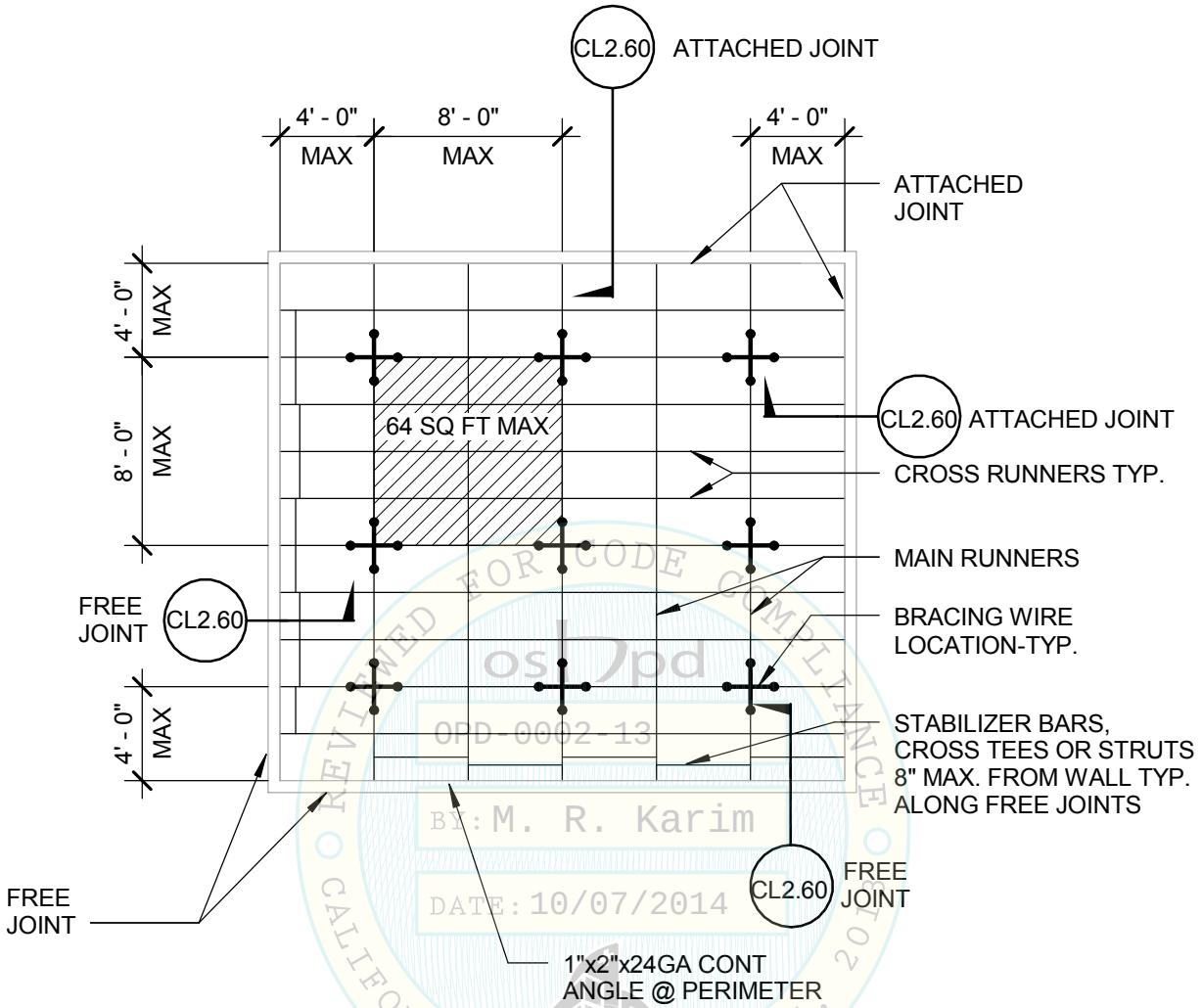

REVIEWED FOR CODE COMPLIANCE
oshpd
OPD-0002-13
BY: M. R. Karim
DATE: 10/07/2014
CALIFORNIA BUILDING CODE, 2013

NOTES:

1. BRACING WIRES AND COMP. STRUT SHALL OCCUR AT EVERY 64 SQ. FT. MAX. IN ROOMS OVER 64 SQ. FT.
2. RDP MAY ELECT TO SPECIFY TIGHTER SPACING BETWEEN BRACING WIRES AND COMP. STRUTS TO ALLOW SMALLER ANCHORS PER SCHEDULES ON SHEETS CL4.31 & CL6.60.

Section Title : OSHPD STANDARD SUSPENDED CEILING DETAILS		OPD No:
Sheet Title : TYPICAL CEILING PLAN FOR $1.73 < S_{DS} \leq 2.50$ AND z/h <= 1.0		CL2.20

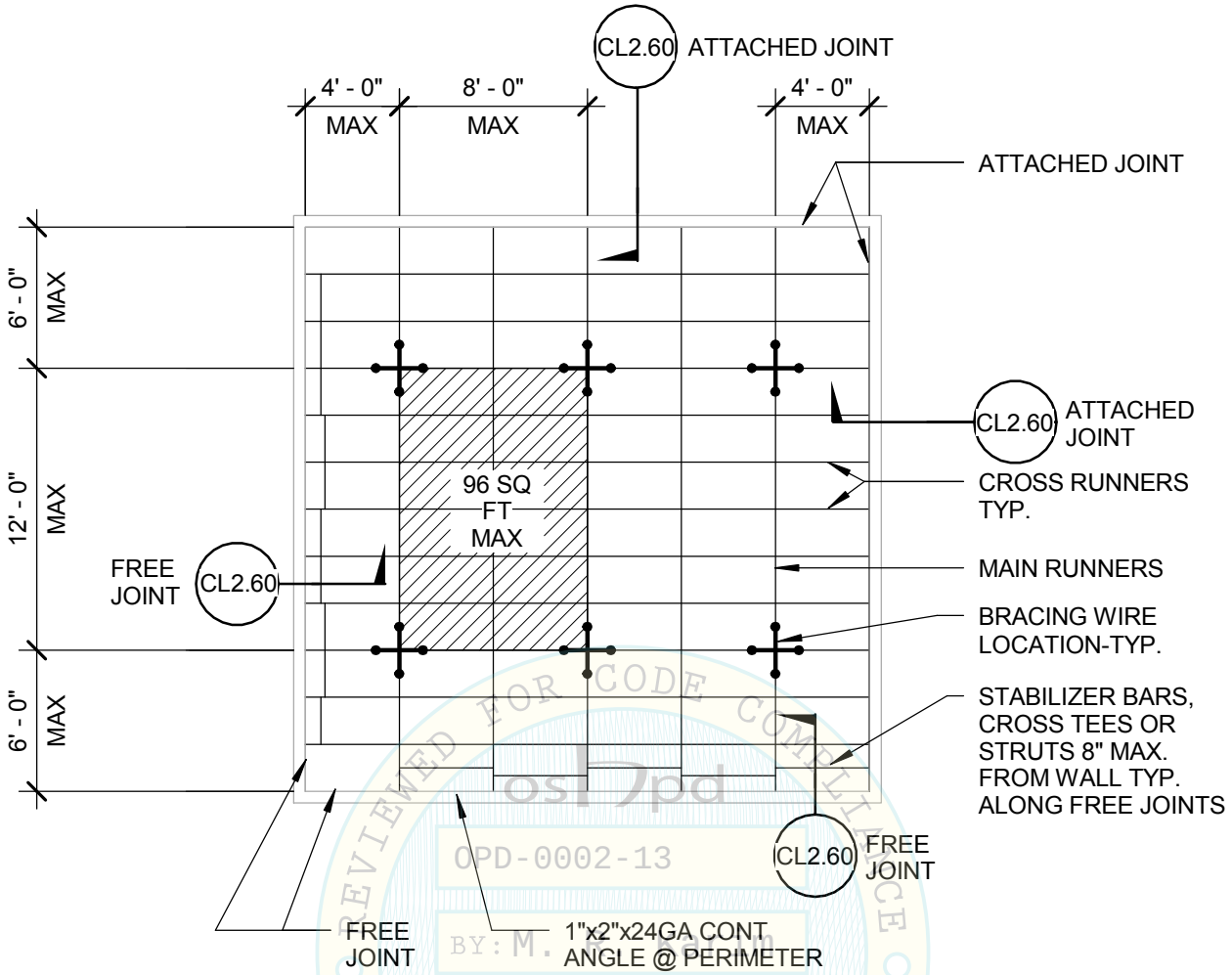

REVIEWED FOR CODE COMPLIANCE
OSHPD
OPD-0002-13
BY: M. Karim
DATE: 10/07/2014
CALIFORNIA BUILDING CODE, 2013

NOTES:

1. BRACING WIRES AND COMP. STRUT SHALL OCCUR AT EVERY 96 SQ. FT. MAX. IN ROOMS OVER 96 SQ. FT.
2. RDP MAY ELECT TO SPECIFY TIGHTER SPACING AND COMP. STRUTS TO ALLOW SMALLER ANCHORS PER SCHEDULES ON SHEETS CL4.31 & CL6.60.

Section Title : OSHPD STANDARD SUSPENDED CEILING DETAILS		OPD No:
Sheet Title : TYPICAL CEILING PLAN FOR $1.15 < S_{DS} \leq 1.73$ AND z/h <= 1.0		CL2.21

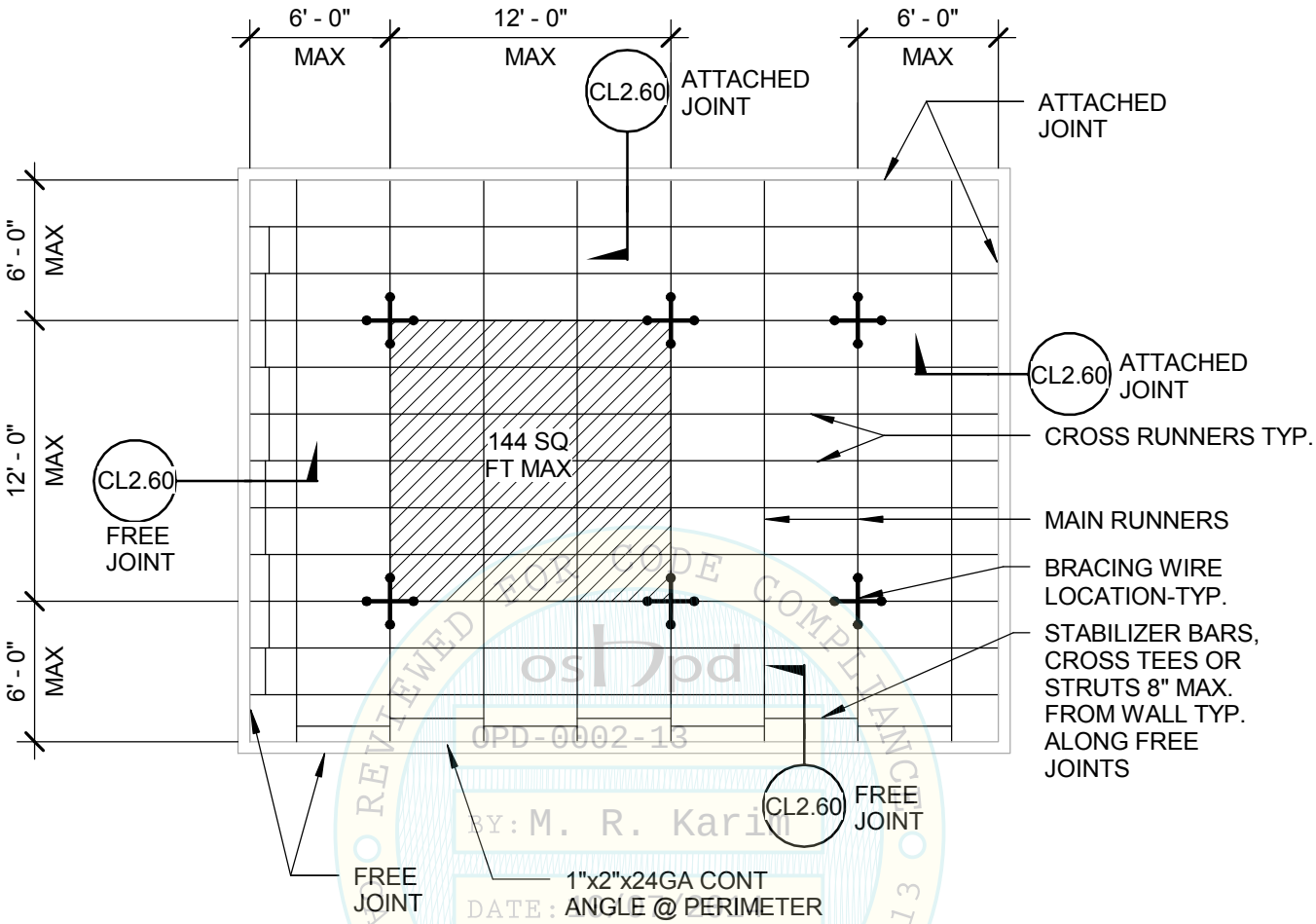

REVIEWED FOR CODE COMPLIANCE
oshpd
OPD-0002-13
BY: M. R. Karim
DATE: 10/07/2014
CALIFORNIA BUILDING CODE, 2013

NOTES:

1. BRACING WIRES AND COMP. STRUT SHALL OCCUR AT EVERY 144 SQ. FT. MAX. IN ROOMS OVER 144 SQ. FT.

2. RDP MAY ELECT TO SPECIFY TIGHTER SPACING AND COMP. STRUTS TO ALLOW SMALLER ANCHORS PER SCHEDULES ON SHEETS CL4.31 & CL6.60.

Section Title : OSHPD STANDARD SUSPENDED CEILING DETAILS		OPD No:
Sheet Title : TYPICAL CEILING PLAN FOR $S_{DS} \leq 1.15$ AND z/h <= 1.0		CL2.22

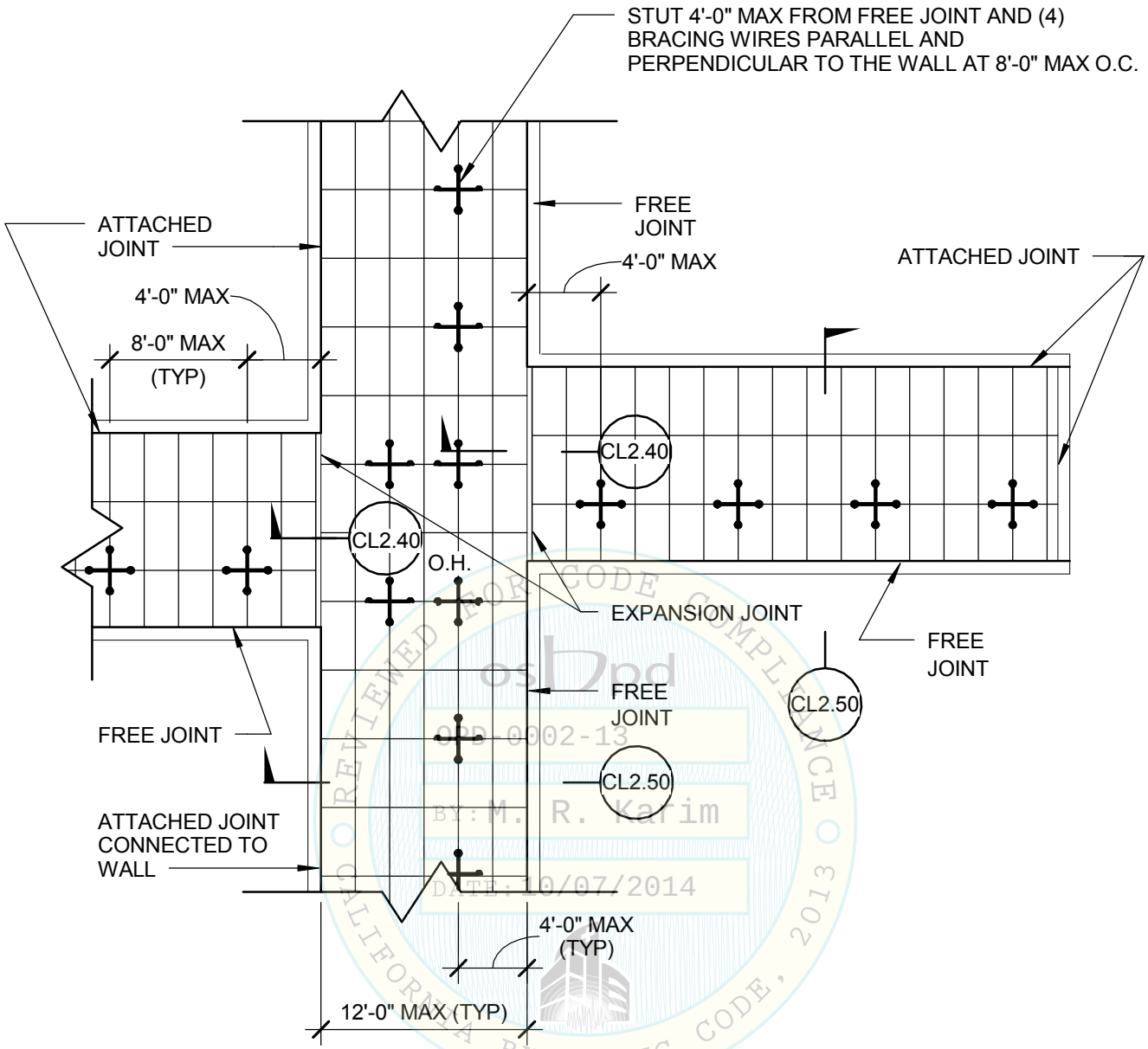

REVIEWED FOR CODE COMPLIANCE
oshpd
OPD-0002-13
BY: M. R. Karim
DATE: 10/07/2014
CALIFORNIA BUILDING CODE, 2013

LOCATION OF EXPANSION/SLIP JOINTS IN CORRIDORS

Section Title : OSHPD STANDARD SUSPENDED CEILING DETAILS		OPD No:
Sheet Title : SUSPENDED ACOUSTICAL CEILING-CORRIDOR CEILING PLAN		CL2.30

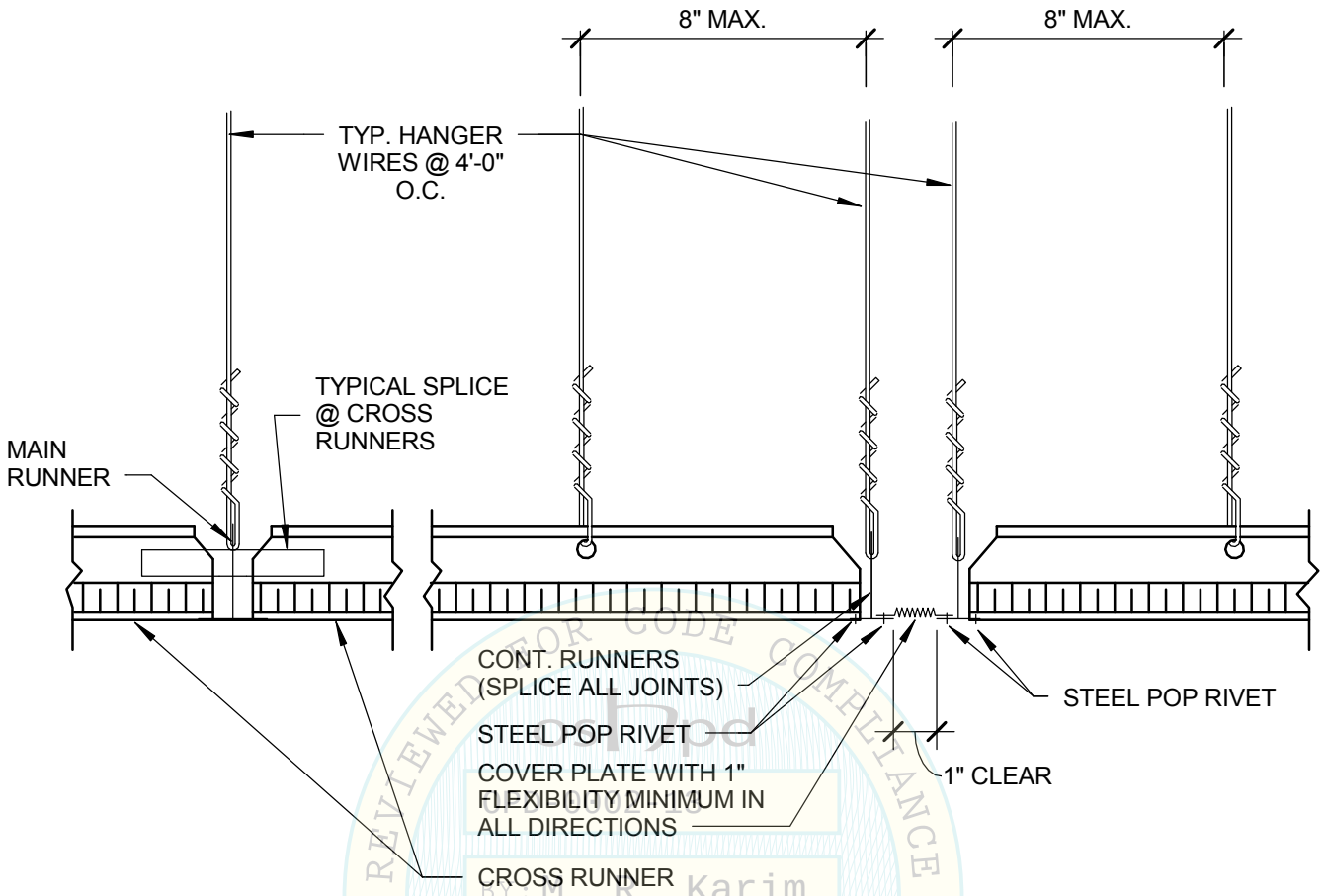

REVIEWED FOR CODE COMPLIANCE
OSHPD
BY: M. R. Karim
DATE: 10/07/2014
CALIFORNIA BUILDING CODE, 2013

RUNNER SPLICE EXPANSION JOINT

EXPANSION JOINT AT INTERSECTION OF CORRIDORS, JUNCTIONS OF CORRIDORS AND LOBBIES, SIMILAR AREAS AND CEILING OVER 2500 SFT

Section Title : OSHPD STANDARD SUSPENDED CEILING DETAILS		OPD No:
Sheet Title : SUSPENDED ACOUSTICAL CEILING - EXPANSION JOINT AT INTERSECTIONS		CL2.40

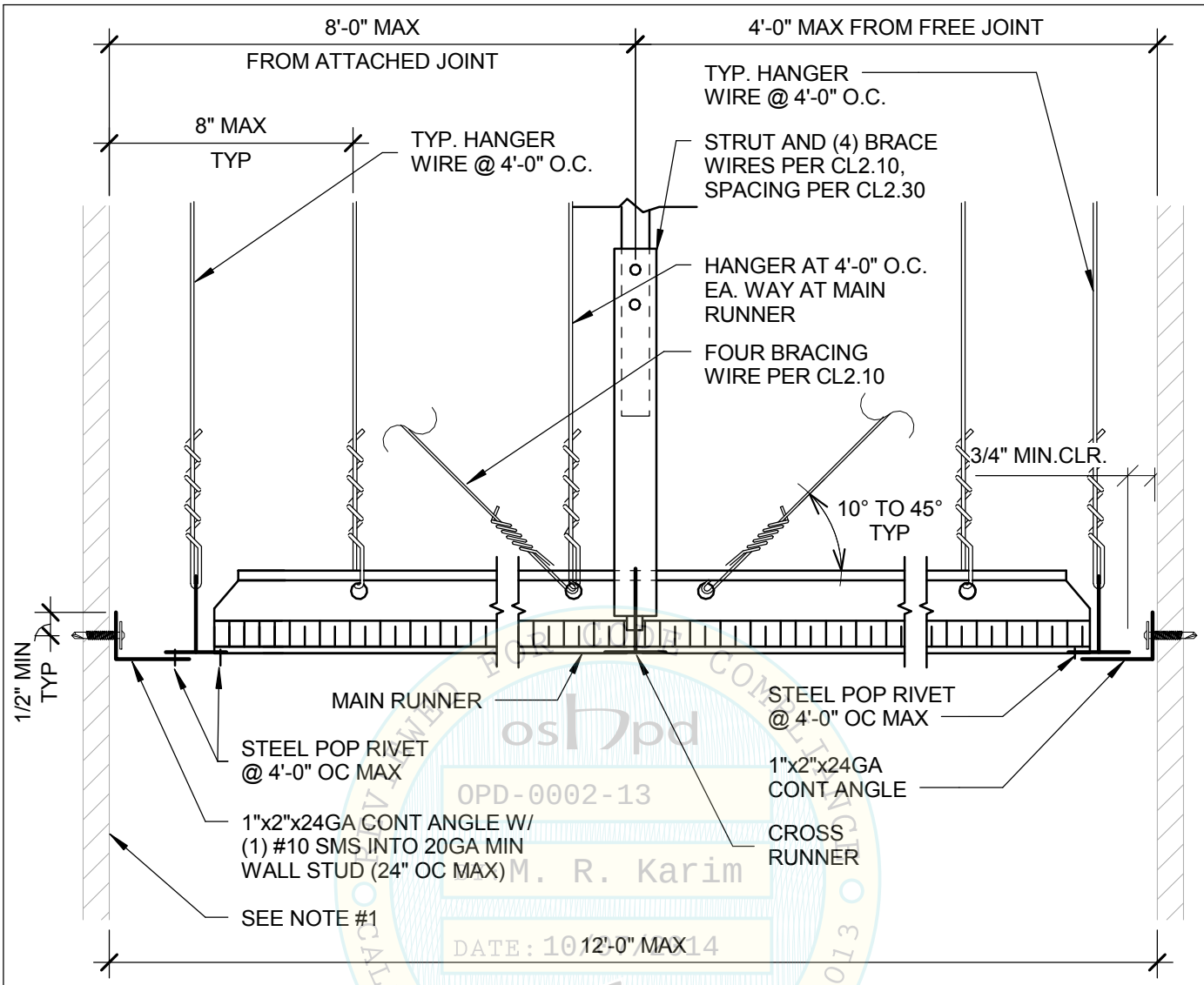

ATTACHED JOINT **EXPANSION JOINT**

ACCEPTABLE EXITWAY DETAILS

NOTES:

1. PERIMETER WALLS SHALL BE DESIGNED TO CARRY TRIBUTARY LATERAL FORCES PER TABLE BELOW. RDP TO VERIFY. RDP TO SPECIFY CONNECTION OF BACKING TO STUDS

S_{DS}	Fp
$S_{DS} \leq 1.15$	9.3 plf
$1.15 < S_{DS} \leq 1.73$	14.0 plf
$1.73 < S_{DS} \leq 2.50$	20.9 plf

2. SEISMIC BRACING WIRES AND STRUTS IN ACCORDANCE WITH PAGES CL2.20, CL2.21, AND CL2.22 SHALL BE PERMITTED IN LIEU OF DESIGNING PERIMETER WALLS FOR SEISMIC FORCES AND BRACING SYSTEM SHOWN ON PAGE CL2.30 AND THIS PAGE.

3. STEEL POP RIVET SHALL HAVE MINIMUM ALLOWABLE SHEAR STRENGTH OF 120# AND ULTIMATE SHEAR STRENGTH OF 300#.

Section Title : OSHPD STANDARD SUSPENDED CEILING DETAILS		OPD No:
Sheet Title : TYPICAL CEILING SECTION AT EXITWAY CORRIDORS		CL2.50

OSHPD OPD-0002-13 M. R. Karim DATE: 10/07/2014

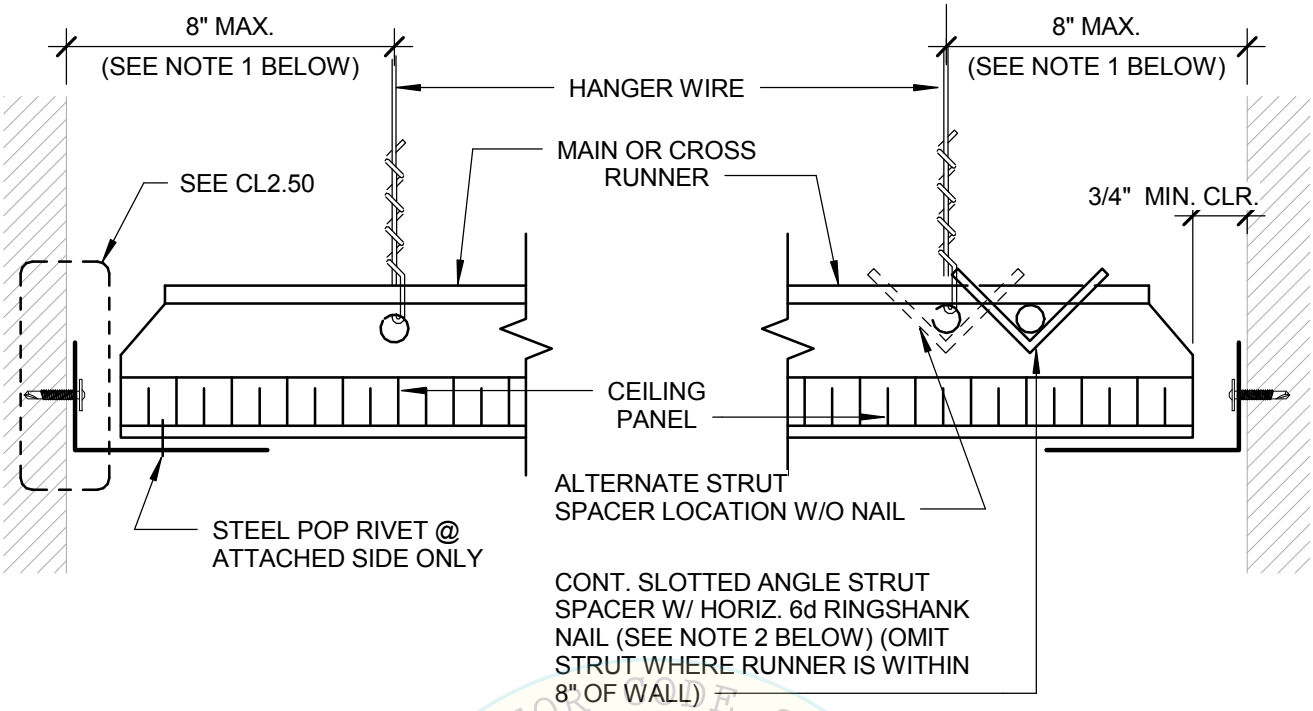

ATTACHED JOINT **FREE JOINT**

REVIEWED FOR CODE COMPLIANCE
OSHPD
OPD 0002-13
BY: KARIM
DATE: 10/07/2014
CALIFORNIA BUILDING CODE, 2013

1. PROVIDE #12 GAGE HANGER WIRES AT THE ENDS OF ALL MAIN AND CROSS RUNNERS WITHIN EIGHT (8) INCHES OF THE SUPPORT OR WITHIN ONE-FOURTH (1/4) OF THE LENGTH OF THE END TEE, WHICHEVER IS LESS, FOR THE PERIMETER OF THE CEILING AREA. PERIMETER WIRES ARE NOT REQUIRED WHEN THE LENGTH OF THE END TEE IS EIGHT (8) INCHES OR LESS.
2. NAILS AT ENDS OF HORIZONTAL STRUTS ARE TO BE PLACED WITH NAIL HEAD TOWARD CENTER LINE OF SPAN OF STRUT.
3. SPACERS MAY BE SLOTTED APPROVED ANGLES OR CHANNELS WITH "DIAMOND POINTS" OF SPRING STEEL WHICH SNAP TIGHT TO PREVENT MOVEMENT OF STRUT.
4. STEEL POP RIVETS SHALL HAVE MINIMUM ALLOWABLE SHEAR STRENGTH OF 120# AND ULTIMATE SHEAR STRENGTH OF 300#.

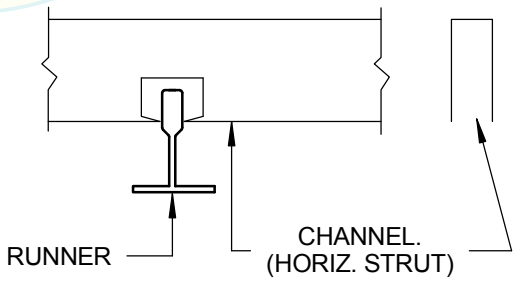

APPROVED SPACER

Section Title : OSHPD STANDARD SUSPENDED CEILING DETAILS		OPD No:
Sheet Title : CEILING PERIMETER INCLUDING NON-EXITWAY CORRIDORS		CL2.60

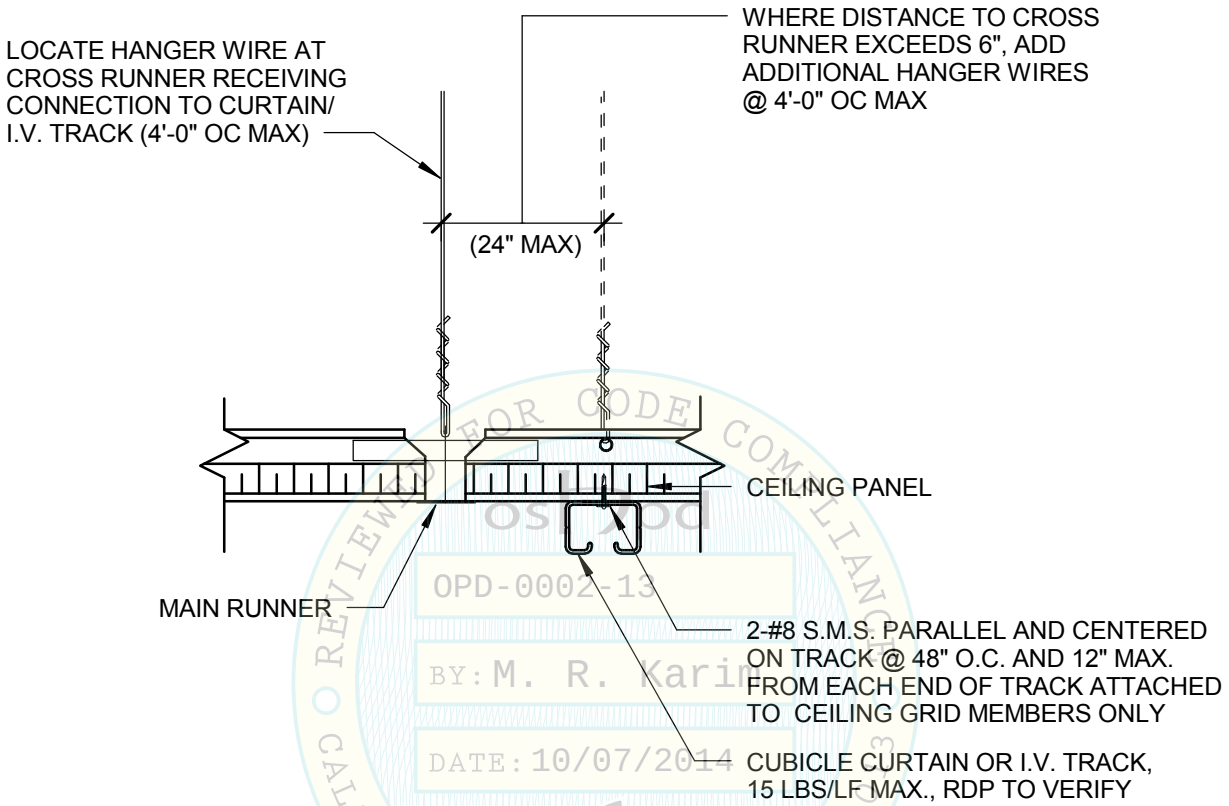

REVIEWED FOR CODE COMPLIANCE
OSHPD
OPD-0002-13
BY: M. R. Karim
DATE: 10/07/2014
CALIFORNIA BUILDING CODE, 2013

Section Title : OSHPD STANDARD SUSPENDED CEILING DETAILS		OPD No:
Sheet Title : SUSPENDED ACOUSTICAL CEILING - CUBICLE CURTAIN I.V. TRACK		CL2.70

NOTES:

1. SEE GENERAL NOTE #15 ON CL0.03

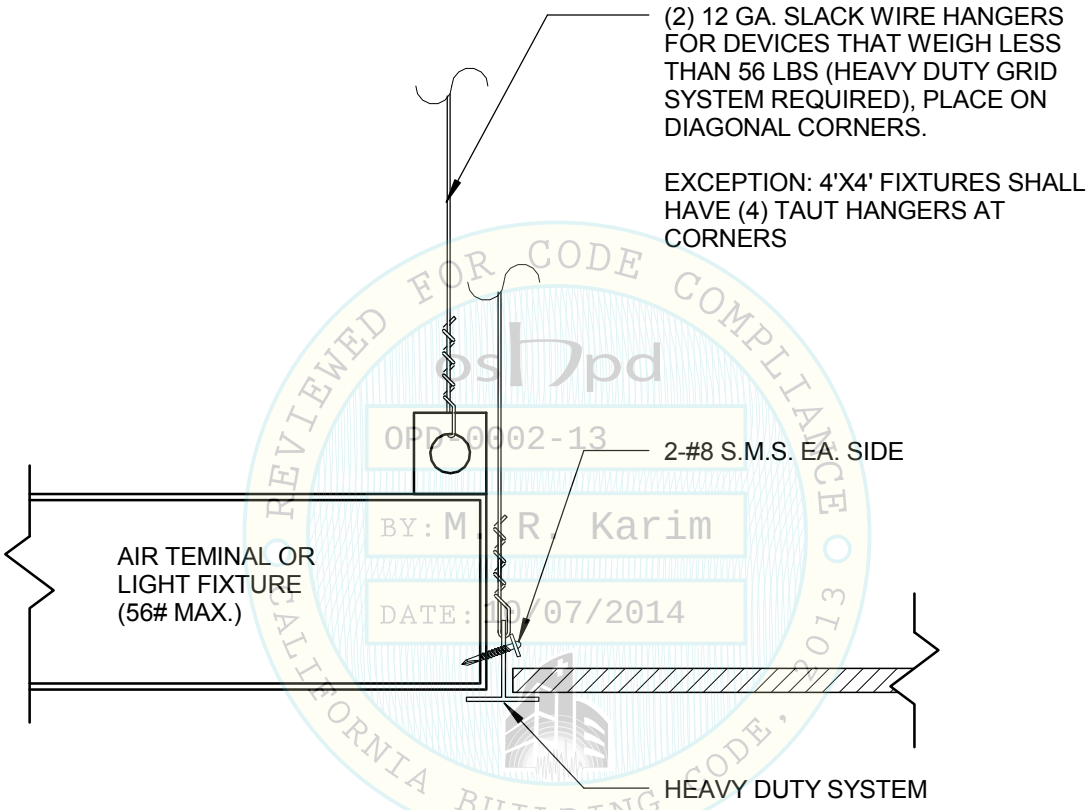

REVIEWED FOR CODE COMPLIANCE
oshpd
OPD-0002-13
BY: M.R. Karim
DATE: 10/07/2014
CALIFORNIA BUILDING CODE, 2013

Section Title : OSHPD STANDARD SUSPENDED CEILING DETAILS		OPD No:
Sheet Title : SUSPENDED ACOUSTICAL CEILING - LIGHT FIXTURES/ AIR TERMINAL SUPPORT DETAIL		CL2.80

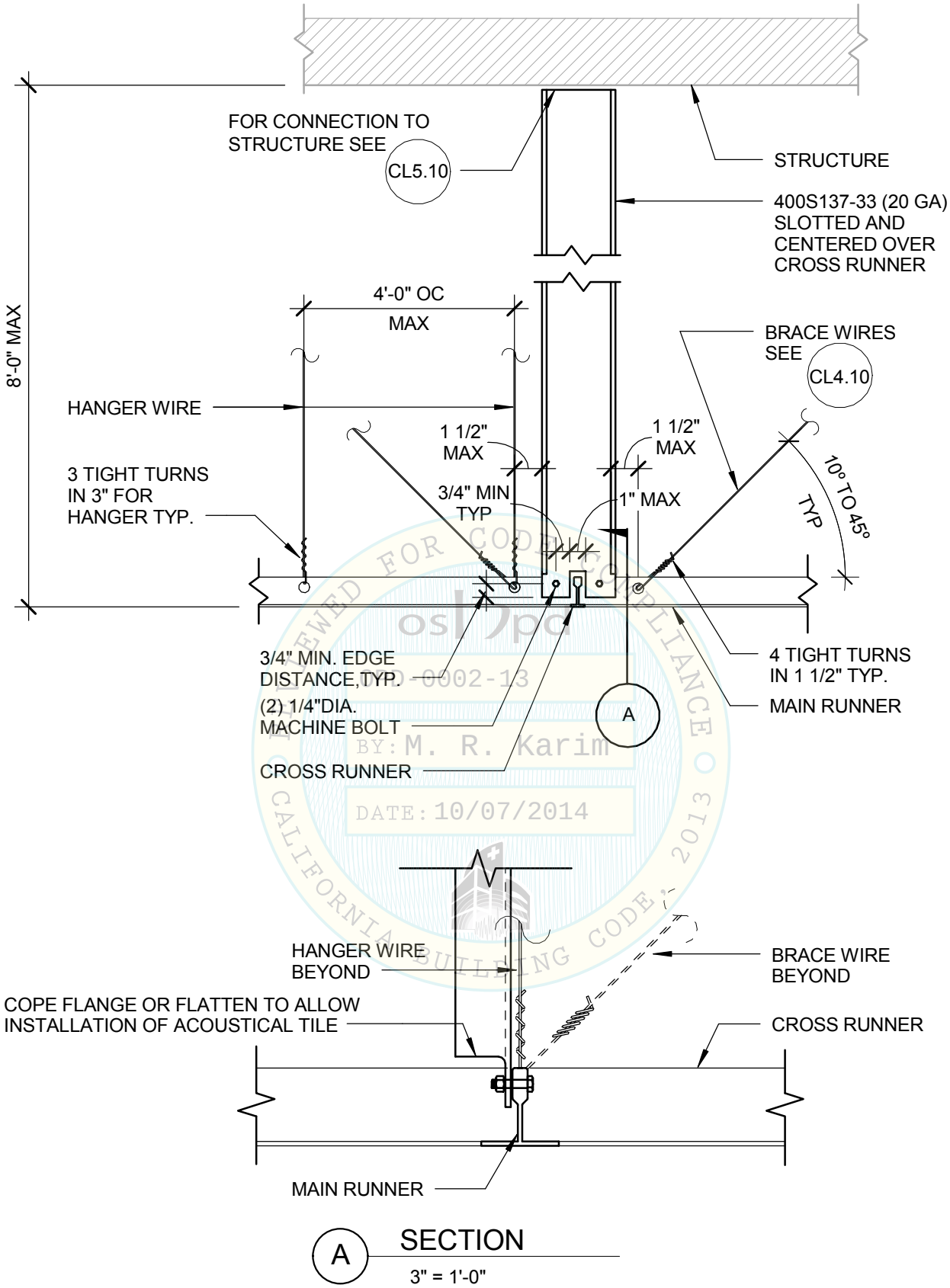

REVIEWED FOR CODE COMPLIANCE
oshpd
OPD-0002-13
BY: M. R. Karim
DATE: 10/07/2014
CALIFORNIA BUILDING CODE 2013

A SECTION
3" = 1'-0"

Section Title : OSHPD STANDARD SUSPENDED CEILING DETAILS	OPD No:
Sheet Title : SUSPENDED ACOUSTICAL CEILING - CHANNEL TYPE STRUT	CL3.10

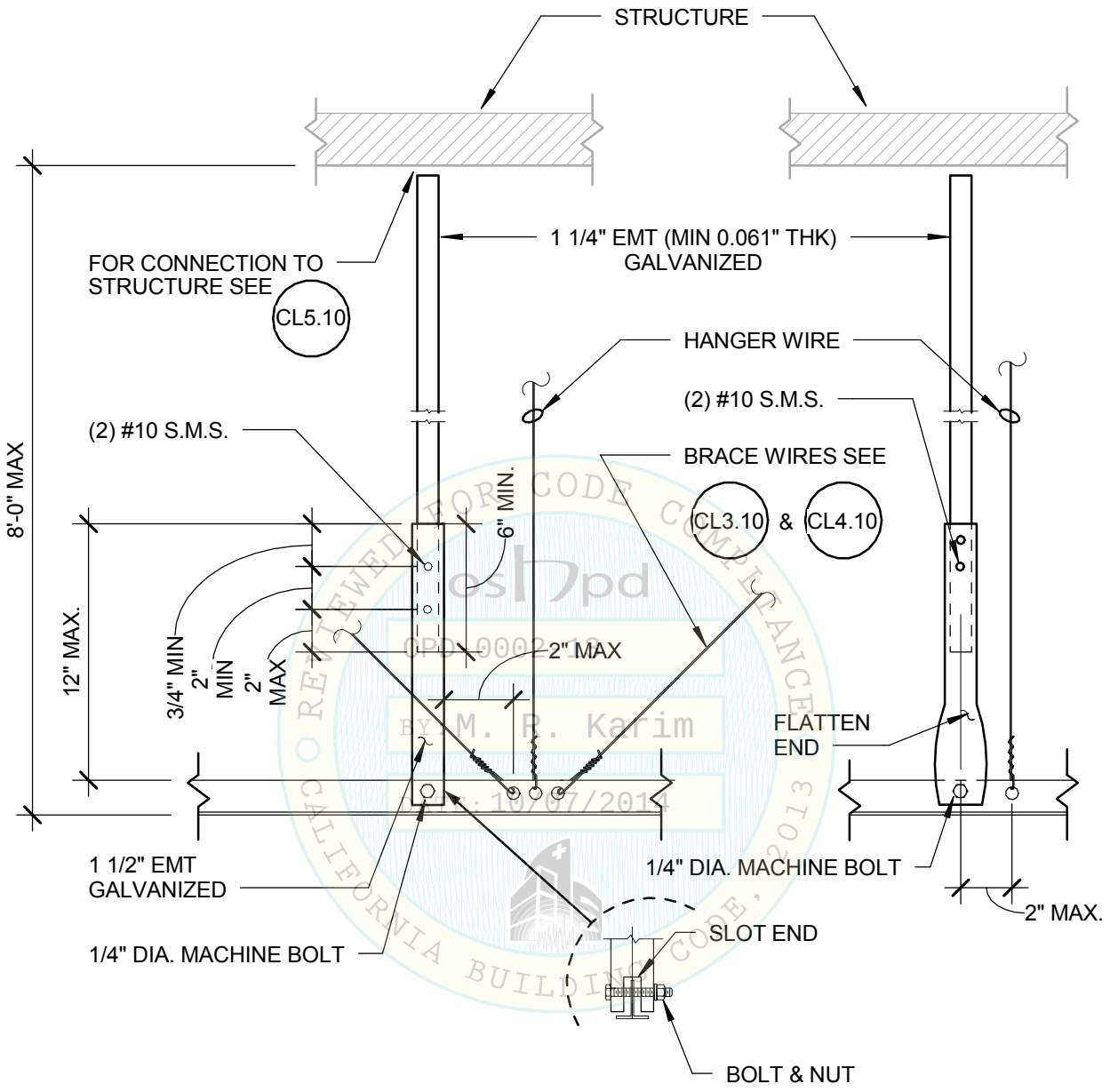

REVIEWED FOR CODE COMPLIANCE
OPD-0002-13
BY M. R. Karim
10/07/2014
CALIFORNIA BUILDING CODE, 2013

OPTION 1

OPTION 2

SEE OPTION 1 FOR
INFORMATION NOT SHOWN

Section Title : OSHPD STANDARD SUSPENDED CEILING DETAILS		OPD No:
Sheet Title : SUSPENDED ACOUSTICAL CEILING - TUBE TYPE STRUT		CL3.20

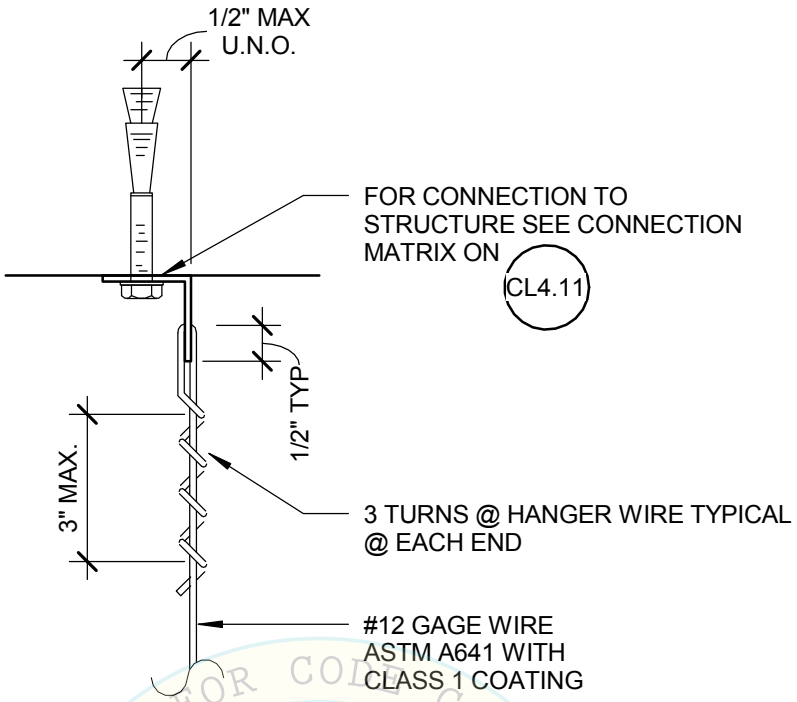

HANGER WIRE

REVIEWED FOR CODE COMPLIANCE
hpd
OPD-0002-13
BY: M. R. Karim
DATE: 10/07/2014
CALIFORNIA BUILDING CODE, 2013

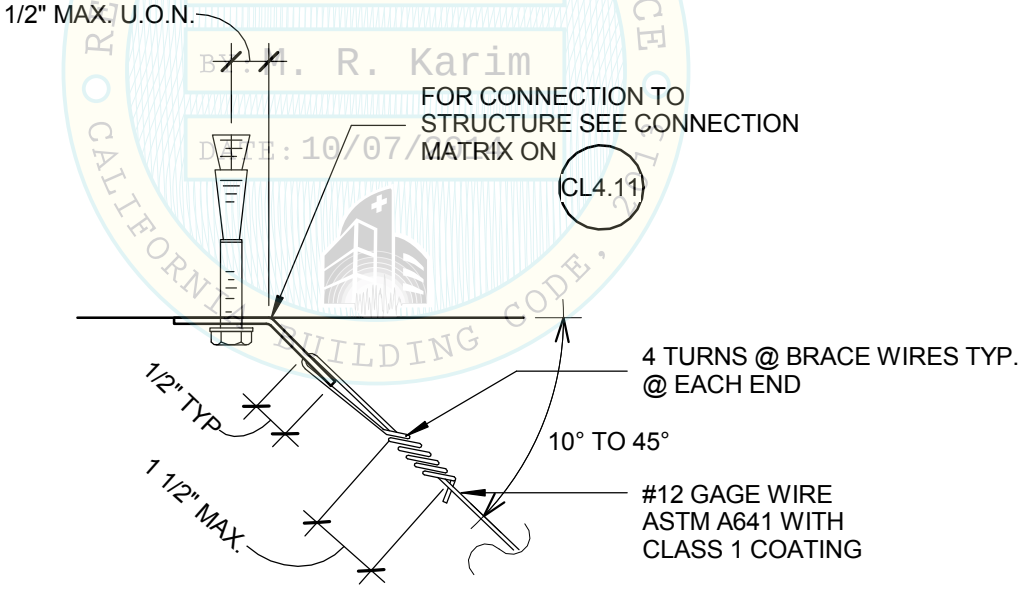

BRACING WIRE

Section Title : OSHPD STANDARD SUSPENDED CEILING DETAILS		OPD No:
Sheet Title : HANGER AND BRACING WIRE CONNECTION - TYPICAL WIRE TURNS		CL4.10

STRUCTURAL CONDITION OF FLOOR/ ROOF ABOVE SUSPENDED CEILING	APPLICABLE HANGER WIRE DETAIL	APPLICABLE BRACING WIRE DETAIL
CONCRETE OVER METAL DECK	CL4.21	CL4.31
CONCRETE SLAB, BEAM, OR JOIST	CL4.22	CL4.32
STRUCTURAL STEEL	CL4.23	CL4.33
SAWN TIMBER	CL4.24	CL4.34
METAL STUD WALL	CL4.25	CL4.35

REVIEWED FOR CODE COMPLIANCE
oshpd
OPD-0002-13
BY: M. R. Karim
DATE: 10/07/2014
CALIFORNIA BUILDING CODE, 2013

Section Title : OSHPD STANDARD SUSPENDED CEILING DETAILS

OPD No:

Sheet Title : HANGER AND BRACING WIRE CONNECTION MATRIX

CL4.11

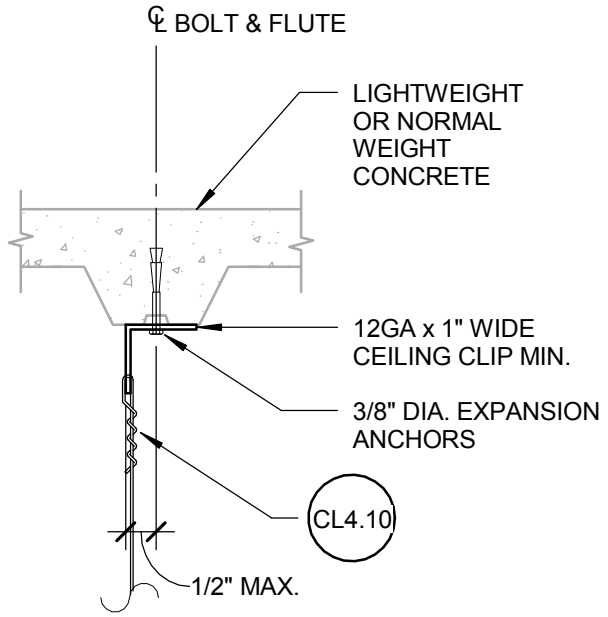

OPTION 1

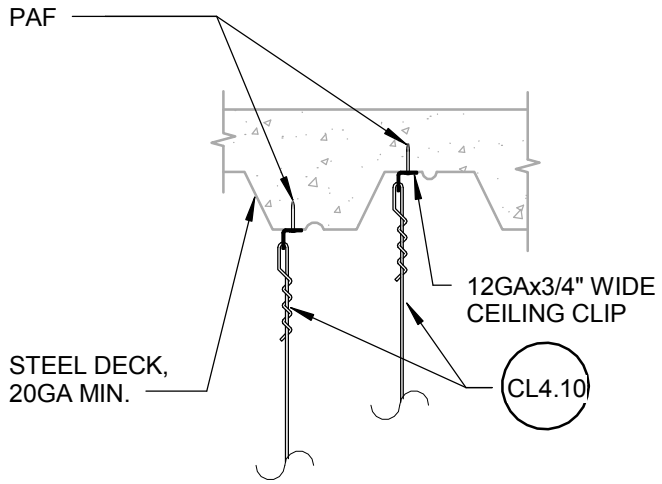

OPTION 2

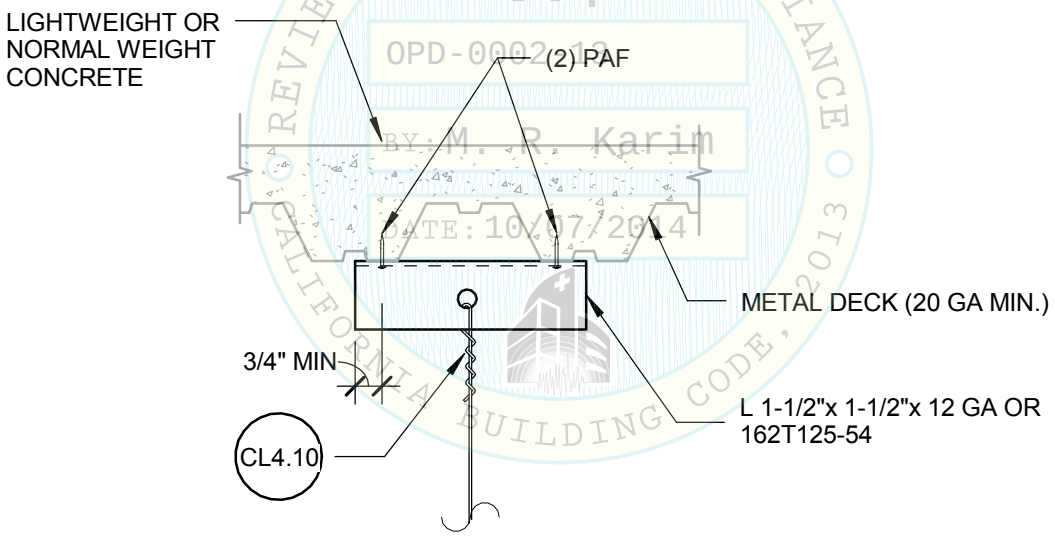

OPTION 3

REVIEWED FOR CODE COMPLIANCE
oshpd
OPD-0002-13
BY: M. R. Karim
DATE: 10/07/2014
CALIFORNIA BUILDING CODE, 2013

NOTES:

1. LOAD TEST IN ACCORDANCE WITH GENERAL NOTE 14(g), PAGE CL0.02 SHALL BE REQUIRED

2. REFER TO CL4.10 FOR ADDITIONAL DETAILS

Section Title : OSHPD STANDARD SUSPENDED CEILING DETAILS		OPD No:
Sheet Title : HANGER WIRE CONNECTION TO CONCRETE OVER METAL DECK		CL4.21

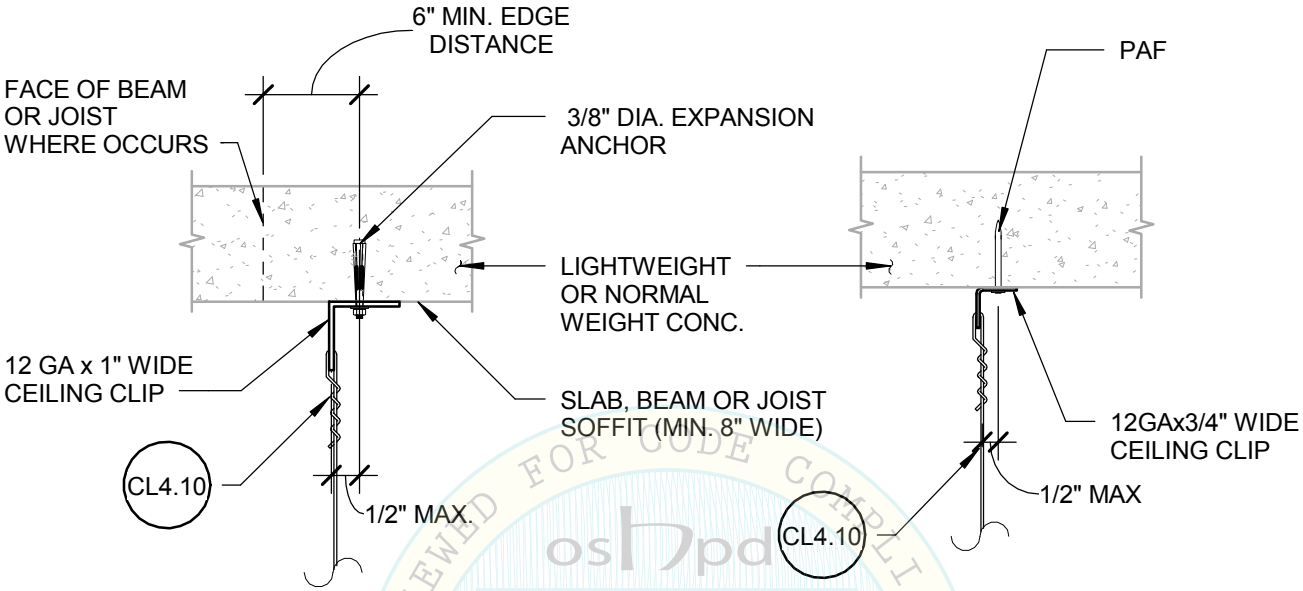

OPTION 1 **OPTION 2**

REVIEWED FOR CODE COMPLIANCE
oshpd
OPD-0002-13
BY: M. R. Karim
DATE: 10/07/2014
CALIFORNIA BUILDING CODE, 2013

NOTES:

1. LOAD TEST IN ACCORDANCE WITH GENERAL NOTE 14(g), PAGE CL0.02 SHALL BE REQUIRED
2. PRIOR TO INSTALLATION, REINFORCING/PRESTRESSING BAR LOCATIONS SHALL BE DETERMINED BY NON-DESTRUCTIVE TESTING
3. REFER TO CL4.10 FOR ADDITIONAL DETAILS

Section Title : OSHPD STANDARD SUSPENDED CEILING DETAILS		OPD No:
Sheet Title : HANGER WIRE CONNECTION TO CONCRETE SLAB, BEAM, OR JOIST		CL4.22

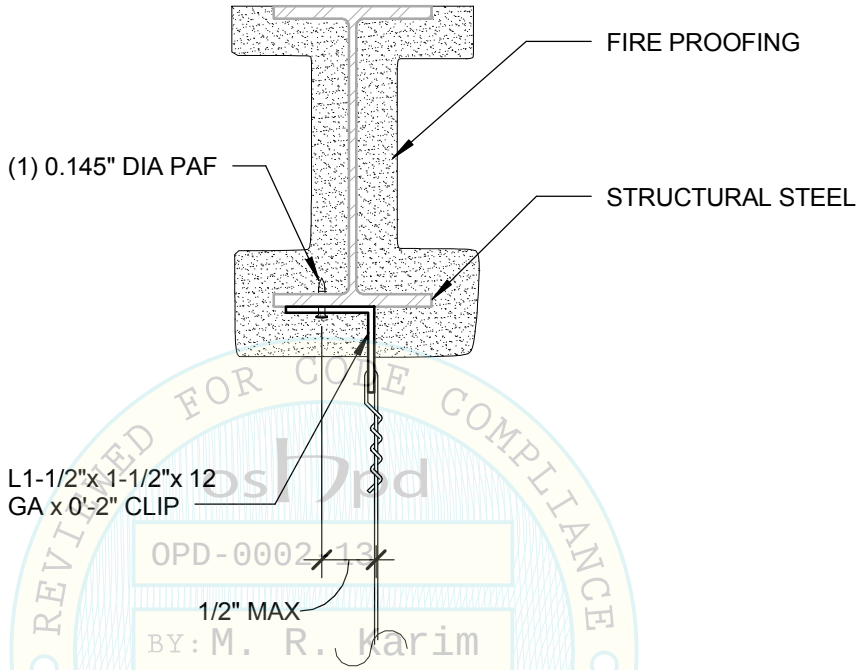

REVIEWED FOR CODE COMPLIANCE
oshpd
OPD-0002-13
BY: M. R. Karim
DATE: 10/07/2014
CALIFORNIA BUILDING CODE, 2013

HANGER WIRE

NOTES :

1. BEAM FLANGE THICKNESS SHALL NOT BE LESS THAN 3/16" OR MORE THAN 3/8"

2. FRAMING MEMBERS SHALL BE DESIGNED TO CARRY THE CEILING LOADS, RDP TO VERIFY

3. RDP IN RESPONSIBLE CHARGE, I.O.R. AND CONTRACTOR SHALL VERIFY THAT NO PAF IS INSTALLED IN THE PROTECTED ZONE OF ANY STEEL MEMBER, SEE ANSI/AISC 341-10.

Section Title : OSHPD STANDARD SUSPENDED CEILING DETAILS		OPD No:
Sheet Title : HANGER WIRE CONNECTION TO STRUCTURAL STEEL		CL4.23

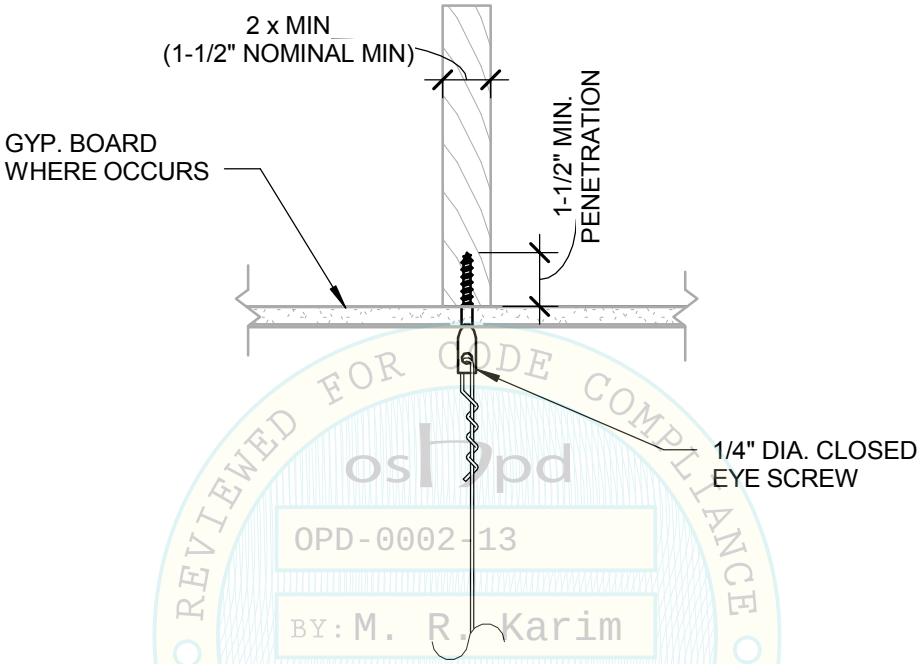

REVIEWED FOR CODE COMPLIANCE
oshpd
OPD-0002-13
BY: M. R. Karim
DATE: 10/07/2014
CALIFORNIA BUILDING CODE, 2013

HANGER WIRE

NOTES:

1. FRAMING MEMBERS SHALL BE DESIGNED TO CARRY THE CEILING LOADS, RDP TO VERIFY

2. RDP SHALL VERIFY THAT SCREWS AT THE BOTTOM FLANGE OF TRUSS IS ACCEPTABLE

Section Title : OSHPD STANDARD SUSPENDED CEILING DETAILS		OPD No:
Sheet Title : HANGER WIRE CONNECTION TO SAWN TIMBER		CL4.24

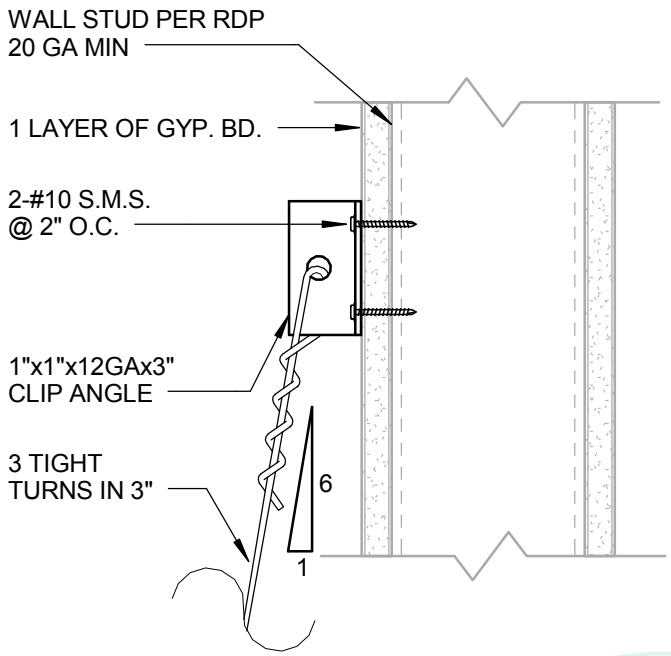

OPTION 1

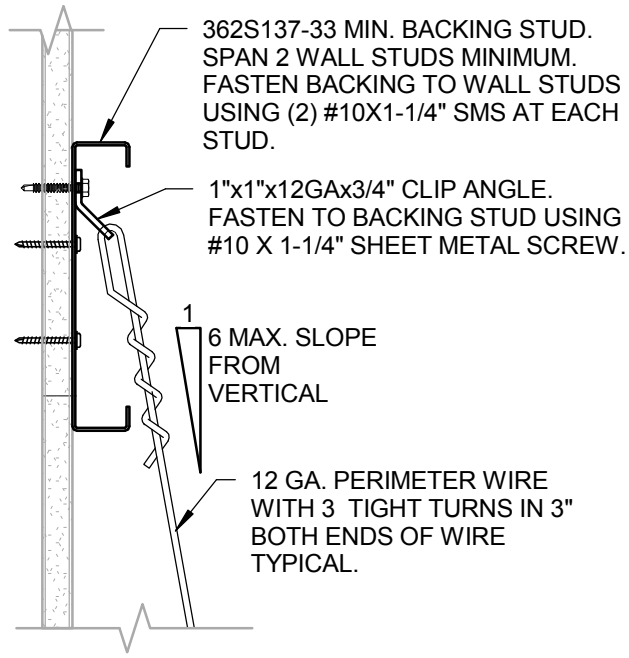

OPTION 2

NOTES:

1. THIS IS APPLIED FOR PERIMETER WIRE ATTACHEMENT OR WHERE OBSTRUCTION PREVENTS ATTACHMENT TO STRUCTURE ABOVE
2. RDP SHALL DESIGN FRAMING WALL TO CARRY THE CEILING LOAD. SEE TABLE BELOW FOR LOADS. LOADS ASSUME A TRIBUTARY AREA OF 16 SQ FT AND ARE UNFACTORED.
3. WALLS SHALL BE DESIGNED FOR HANGER FORCES BELOW. AT FREE JOINT, HANGER WIRE SHALL HAVE A MINIMUM STRETCH LENGTH OF 12"

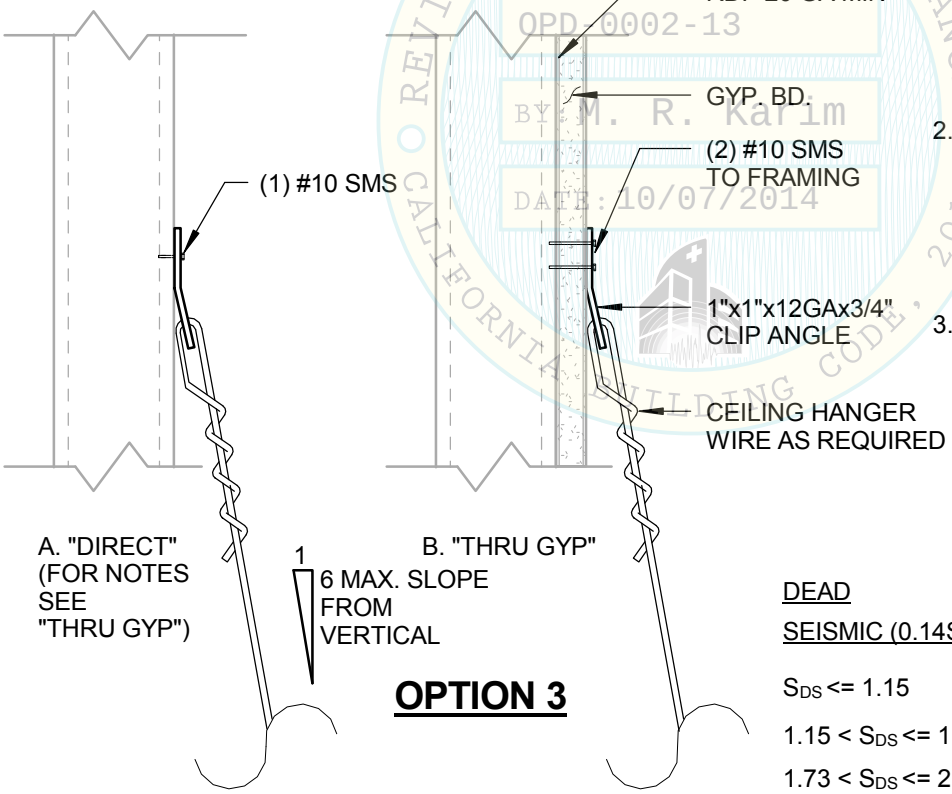

OPTION 3

HANGER FORCES

	VERTICAL	HORIZONTAL
DEAD	64 LBS	11 LBS
SEISMIC ($0.14S_{DS}$ Wp)		
S_{DS} <= 1.15	11 LBS	2 LBS
1.15 < S_{DS} <= 1.73	16 LBS	3 LBS
1.73 < S_{DS} <= 2.50	23 LBS	4 LBS

REVIEWED FOR CODE COMPLIANCE
OSHPD
OPD-0002-13
BY: M. R. Karim
DATE: 10/07/2014
CALIFORNIA BUILDING CODE, 2013

Section Title : OSHPD STANDARD SUSPENDED CEILING DETAILS		OPD No:
Sheet Title : HANGER WIRE CONNECTION TO METAL STUD WALL		CL4.25

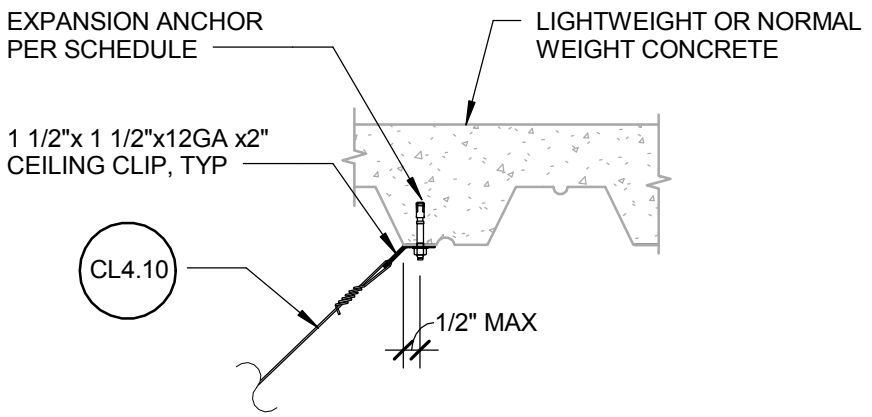

OPTION 1

ANCHOR BOLT SIZE	SPLAY BRACE/COMP POST SPACING	SDS (g) RANGE (z/h = 1.0)	DECK TYPE
5/8 x 4 1/4" EMBED	8' x 8' (PER CL2.20)	$1.73<S_{DS}\leq 2.5$ (PER CL2.20)	W3 + 3 1/4" MIN PER CL1.20
5/8 x 4 1/4" EMBED	8' x 12' (PER CL2.21)	$1.15<S_{DS}\leq 1.73$ (PER CL2.21)	W3 + 3 1/4" MIN PER CL1.20
5/8 x 4 1/4" EMBED	12' x 12' (PER CL2.22)	$0<S_{DS}\leq 1.15$ (PER CL2.22)	W3 + 3 1/4" MIN PER CL1.20
3/8 x 2" EMBED[3]	8' x 8' (PER CL2.20)[3]	$0.76<S_{DS}\leq 1.14$ (IN LIEU OF S_{DS} SHOWN ON CL2.20)[3]	W3 + 3 1/4" MIN PER CL1.20 OR B 1 1/2" + 2 1/4" MIN PER CL1.22
3/8 x 2" EMBED[3]	8' x 12' (PER CL2.21)[3]	$0.51<S_{DS}\leq 0.76$ (IN LIEU OF S_{DS} SHOWN ON CL2.21)[3]	W3 + 3 1/4" MIN PER CL1.20 OR B 1 1/2" + 2 1/4" MIN PER CL1.22
3/8 x 2" EMBED[3]	12' x 12' (PER CL2.22)[3]	$0<S_{DS}\leq 0.51$ (IN LIEU OF S_{DS} SHOWN ON CL2.22)[3]	W3 + 3 1/4" MIN PER CL1.20 OR B 1 1/2" + 2 1/4" MIN PER CL1.22

REVIEWED FOR CODE COMPLIANCE
osl/pd
OPD-0002-13
BY: M. BROWN
DATE: 10/07/2014
CALIFORNIA BUILDING CODE, 2013

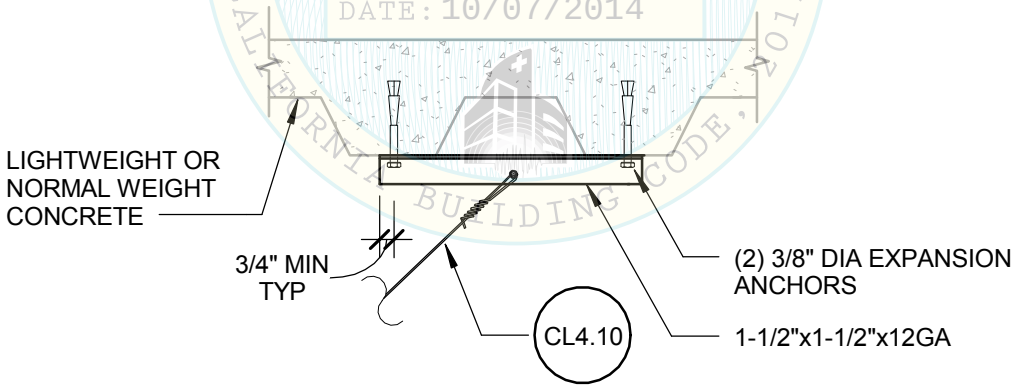

OPTION 2

NOTES:

1. LOAD TEST IN ACCORDANCE WITH GENERAL NOTE 14(g), PAGE CL0.02 SHALL BE REQUIRED
2. REFER TO CL4.10 FOR ADDITIONAL DETAILS
3. RDP CAN USE SMALLER EXPANSION BOLT SIZE AND SHALLOWER EMBEDMENT DEPTH SHOWN, PROVIDED VERTICAL STRUT/BRACING WIRE SPACING IS REDUCED AS SHOWN, IN LIEU OF SPACINGS SHOWN ON CL2.20, CL2.21, AND CL2.22.

Section Title : OSHPD STANDARD SUSPENDED CEILING DETAILS		OPD No:
Sheet Title : BRACING WIRE CONNECTION TO CONCRETE OVER METAL DECK		CL4.31

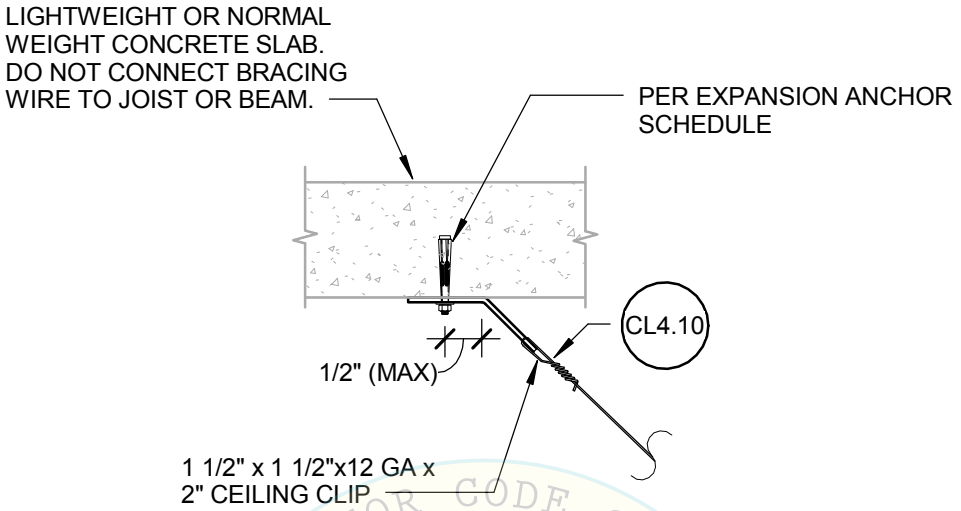

REVIEWED FOR CODE COMPLIANCE
OSHPD
OPD-0002-13
BY: M. R. Karim
DATE: 10/07/2014
CALIFORNIA BUILDING CODES

ANCHOR BOLT SIZE	SPLAY BRACE/COMP POST SPACING	SDS (g) RANGE (z/h = 1.0)
5/8 x 4 1/4" EMBED	8'x8' (PER CL2.20)	W3 + 3 1/4" MIN PER CL1.20
5/8 x 4 1/4" EMBED	8'x12' (PER CL2.21)	W3 + 3 1/4" MIN PER CL1.20
5/8 x 4 1/4" EMBED	12'x12' (PER CL2.22)	W3 + 3 1/4" MIN PER CL1.20
3/8 x 2" EMBED[3]	8'x8' (PER CL2.20) [3]	$1.24<S_{DS}<1.86$ (IN LIEU OF S_{DS} SHOWN ON CL2.20) [3]
3/8 x 2" EMBED[3]	8'x12' (PER CL2.21) [3]	$0.83<S_{DS}<1.24$ (IN LIEU OF S_{DS} SHOWN ON CL2.21) [3]
3/8 x 2" EMBED[3]	12'x12' (PER CL2.22) [3]	$0<S_{DS}<0.83$ (IN LIEU OF S_{DS} SHOWN ON CL2.22) [3]

NOTES:

1. LOAD TEST IN ACCORDANCE WITH GENERAL NOTE 14(g), PAGE CL0.02 SHALL BE REQUIRED.
2. REFER TO CL4.10 FOR ADDITIONAL DETAILS.
3. RDP CAN USE SMALLER EXPANSION BOLT SIZE AND SHALLOWER EMBEDMENT DEPTH SHOWN, PROVIDED VERTICAL STRUT/BRACING WIRE SPACING IS REDUCED AS SHOWN, IN LIEU OF SPACINGS SHOWN ON CL2.20, CL2.21, AND CL2.22.

Section Title : OSHPD STANDARD SUSPENDED CEILING DETAILS

OPD No:

Sheet Title : BRACING WIRE CONNECTION TO CONCRETE SLAB, BEAM, OR JOIST

CL4.32

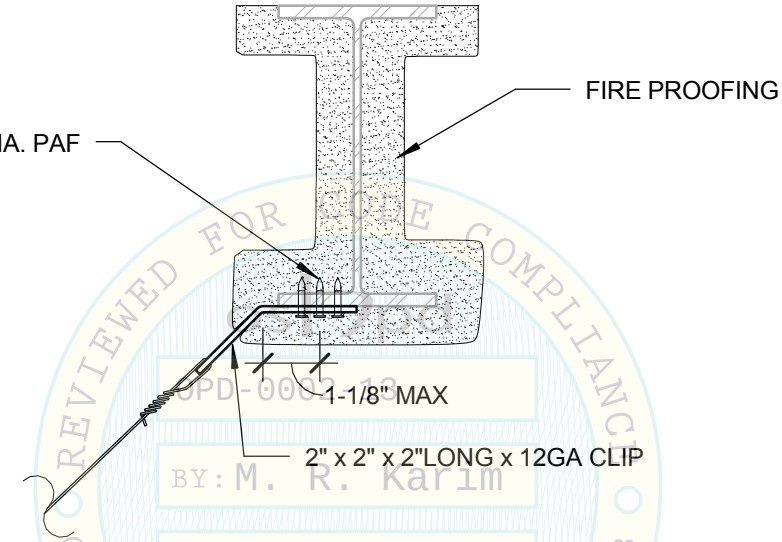

REVIEWED FOR CODE COMPLIANCE
OPD-0002-13
BY: M. R. Karim
DATE: 10/07/2014
CALIFORNIA BUILDING CODE, 2013

BRACING WIRE

NOTES :

1. BEAM FLANGE THICKNESS SHALL NOT BE LESS THAN 3/16" OR MORE THAN 3/8"

2. FRAMING MEMBERS SHALL BE DESIGNED TO CARRY THE CEILING LOADS, RDP TO VERIFY

3. RDP IN RESPONSIBLE CHARGE, I.O.R. AND CONTRACTOR SHALL VERIFY THAT NO PAF IS INSTALLED IN THE PROTECTED ZONE OF ANY STEEL MEMBER, SEE ANSI/AISC 341-10.

Section Title : OSHPD STANDARD SUSPENDED CEILING DETAILS		OPD No:
Sheet Title : BRACING WIRE CONNECTION TO STRUCTURAL STEEL		CL4.33

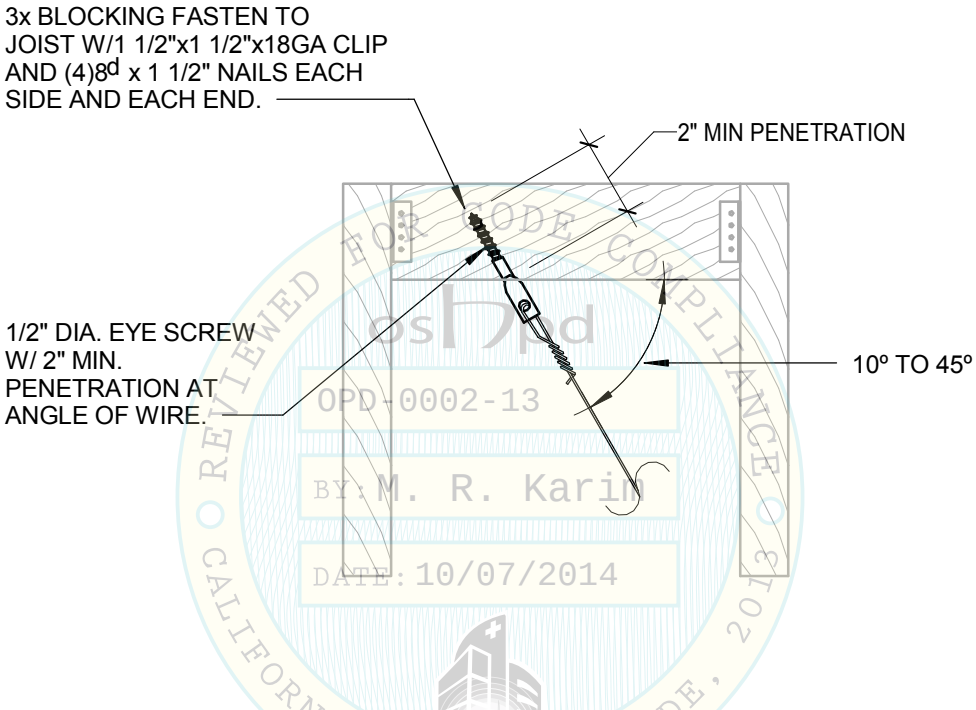

REVIEWED FOR CODE COMPLIANCE
OPD-0002-13
BY: M. R. Karim
DATE: 10/07/2014
CALIFORNIA BUILDING CODE, 2013

BRACING WIRE

NOTES:

1. FRAMING MEMBERS SHALL BE DESIGNED TO CARRY THE CEILING LOADS, RDP TO VERIFY

2. RDP SHALL VERIFY THAT SCREWS AT THE BOTTOM FLANGE OF TRUSS IS ACCEPTABLE

Section Title : OSHPD STANDARD SUSPENDED CEILING DETAILS		OPD No:
Sheet Title : BRACING WIRE CONNECTION TO SAWN TIMBER		CL4.34

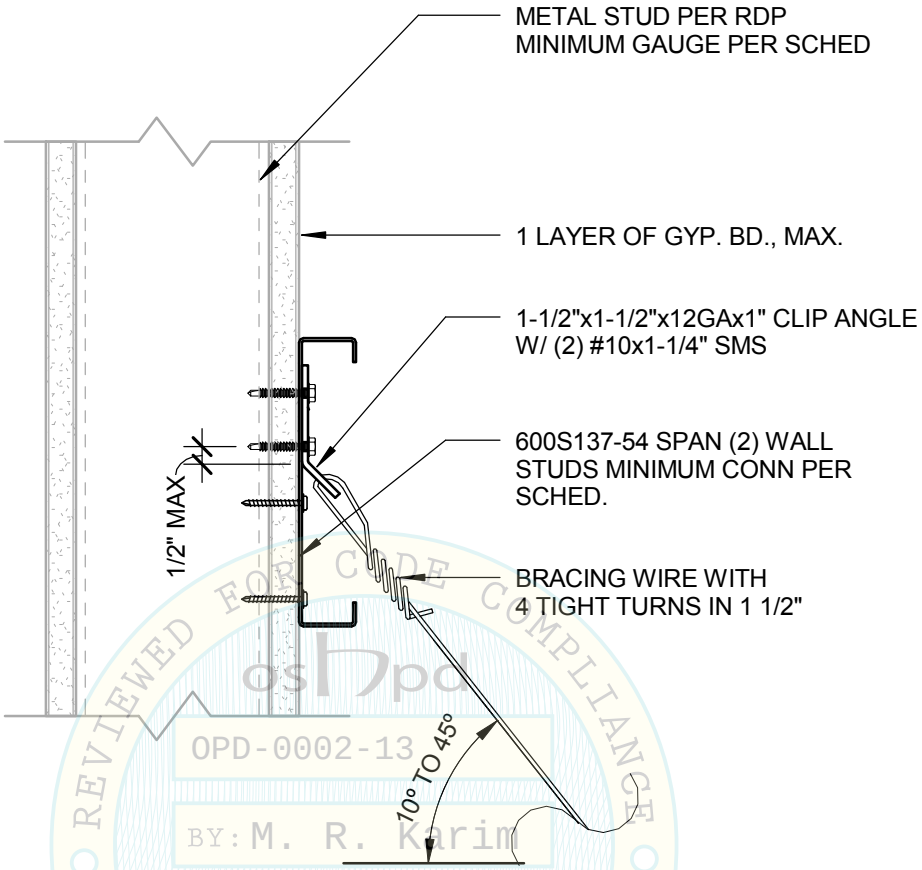

REVIEWED FOR CODE COMPLIANCE
OSHPD
OPD-0002-13
BY: M. R. Karim
DATE: 10/07/2014
CALIFORNIA BUILDING CODE

WALL STUD GAUGE	CONN TO WALL STUD	CONN TO WALL STUD ALT [3]
20 GA	(5) #10x1-1/4" SMS	(3) #10x1-1/4" SMS
18 GA	(4) #10x1-1/4" SMS	(2) #10x1-1/4" SMS

NOTES:

1. RDP SHALL DESIGN FRAMING WALL TO CARRY THE CEILING LOAD PER NOTE #2.

2. SEISMIC BRACE WIRE FORCE = 473 LBS (ASD LEVEL). BRACING WIRE SHALL HAVE A MINIMUM STRETCH LENGTH OF 12", WHEN USED AT FREE JOINT.

3. APPLIES WHERE CLIP ATTACHED DIRECTLY TO WALL STUD.

Section Title : OSHPD STANDARD SUSPENDED CEILING DETAILS		OPD No:
Sheet Title : BRACING WIRE CONNECTION TO METAL STUD WALL		CL4.35

STRUCTURAL CONDITION OF FLOOR / ROOF ABOVE STRUT	APPLICABLE DETAIL
CONCRETE OVER METAL DECK	CL5.20
CONCRETE SLAB, BEAM, OR JOIST	CL5.30
STRUCTURAL STEEL	CL5.40
SAWN TIMBER WITH GYPSUM BOARD	CL5.50
SAWN TIMBER WITHOUT GYPSUM BOARD	CL5.60

REVIEWED FOR CODE COMPLIANCE
oshpd
OPD-0002-13
BY: M. R. Karim
DATE: 10/07/2014
CALIFORNIA BUILDING CODE, 2013

Section Title : OSHPD STANDARD SUSPENDED CEILING DETAILS

OPD No:

Sheet Title : STRUT CONNECTION - CONNECTION MATRIX

CL5.10

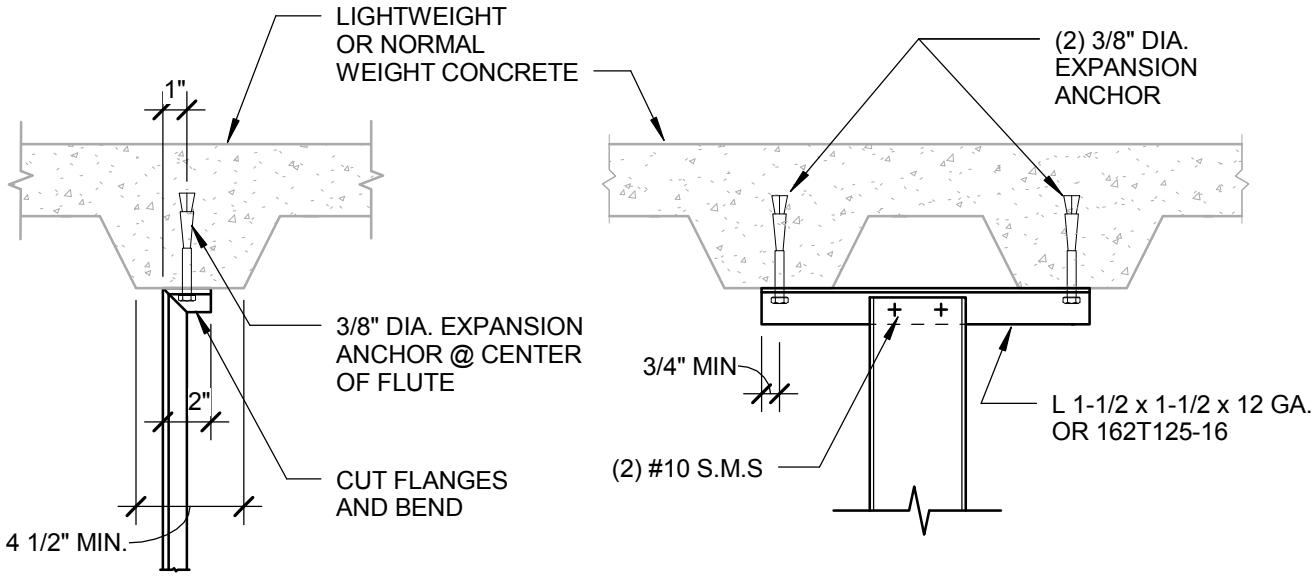

OPTION 1 **OPTION 2**

CHANNEL STRUT

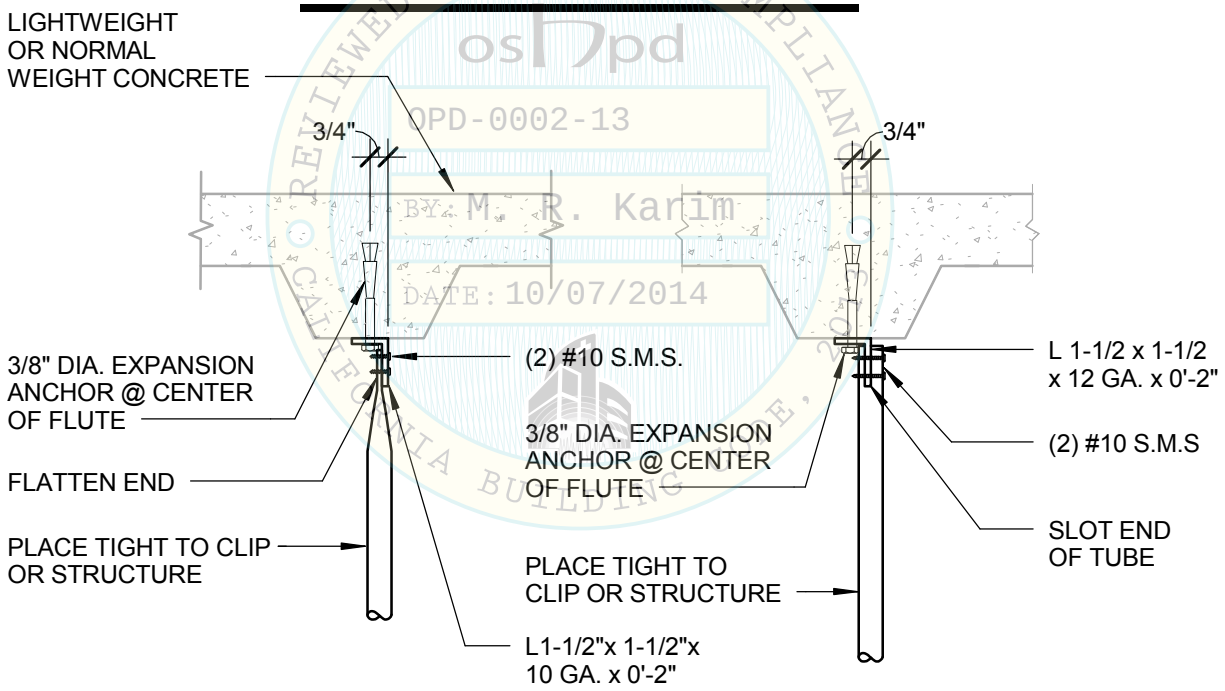

REVIEWED FOR CODE COMPLIANCE
osPpd
OPD-0002-13
BY: M. R. Karim
DATE: 10/07/2014
CALIFORNIA BUILDING CODE

OPTION 1 **OPTION 2**

TUBE STRUT

Section Title : OSHPD STANDARD SUSPENDED CEILING DETAILS		OPD No:
Sheet Title : STRUT CONNECTION TO CONCRETE OVER METAL DECK		CL5.20

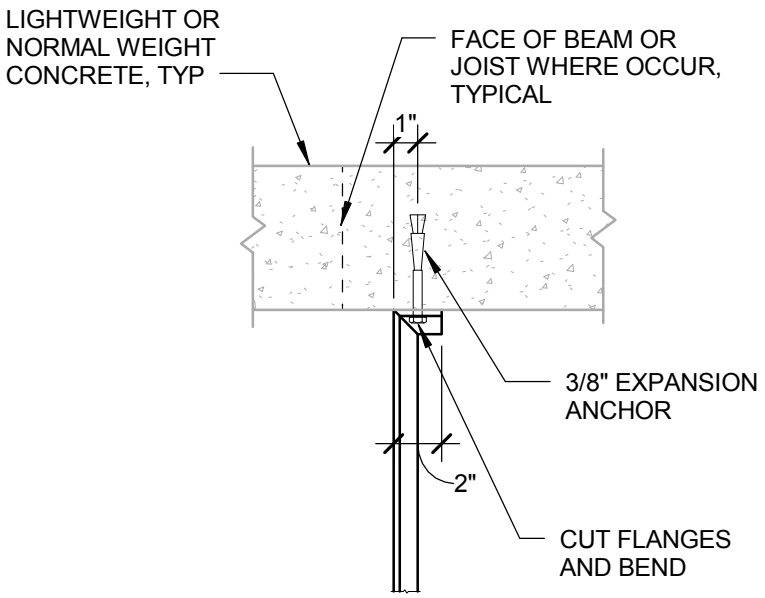

CHANNEL STRUT

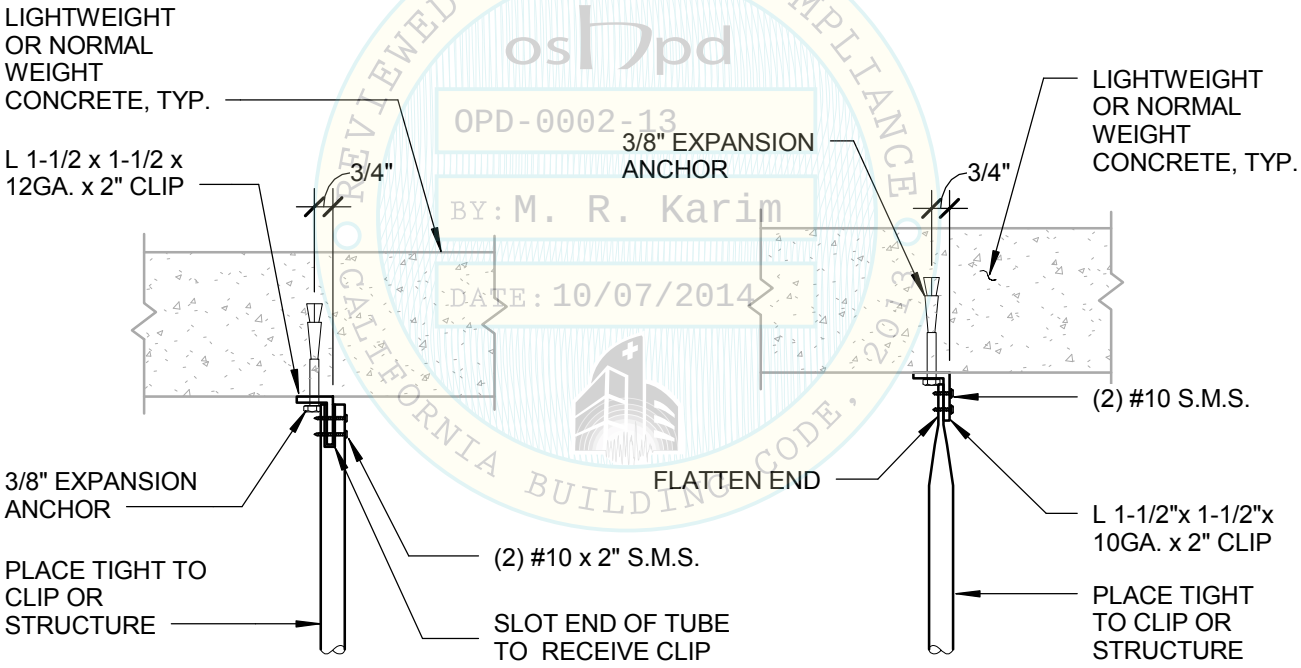

OPTION 1 **OPTION 2**

TUBE STRUT

REVIEWED FOR CODE COMPLIANCE
OSHPD
OPD-0002-13
BY: M. R. Karim
DATE: 10/07/2014
CALIFORNIA BUILDING CODE, 2013

Section Title : OSHPD STANDARD SUSPENDED CEILING DETAILS		OPD No:
Sheet Title : STRUT CONNECTION TO CONCRETE SLAB, BEAM, JOIST SOFFIT		CL5.30

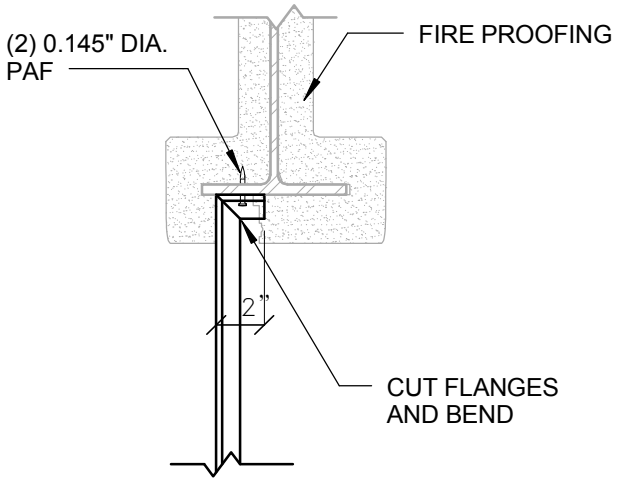

CHANNEL STRUT

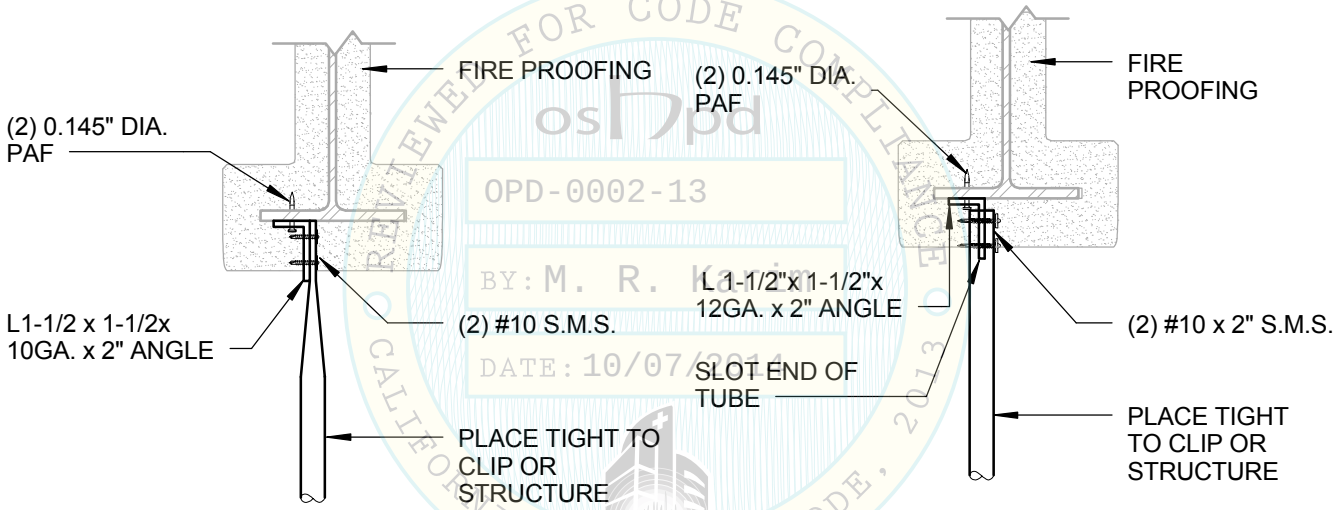

OPTION 1 **OPTION 2**

TUBE STRUT

REVIEWED FOR CODE COMPLIANCE
OSHPD
OPD-0002-13
BY: M. R. Karim
DATE: 10/07/2014
CALIFORNIA BUILDING CODE, 2013

NOTES:

1. STRUCTURAL STEEL MEMBER SHALL HAVE A MINIMUM FLANGE THICKNESS OF 3/16" AND MAXIMUM OF 3/8".
2. FRAMING MEMBERS MUST BE DESIGNED TO CARRY THE CEILING LOADS, RDP TO VERIFY.
3. RDP IN RESPONSIBLE CHARGE, I.O.R. AND CONTRACTOR SHALL VERIFY THAT NO PAF IS INSTALLED IN THE PROTECTED ZONE OF ANY STEEL MEMBER, SEE ANSI/AISC 341-10.
4. SEE PAGES CL5.20 & CL5.30 FOR ADDITIONAL INFORMATION.

Section Title : OSHPD STANDARD SUSPENDED CEILING DETAILS		OPD No:
Sheet Title : STRUT CONNECTION TO STRUCTURAL STEEL		CL5.40

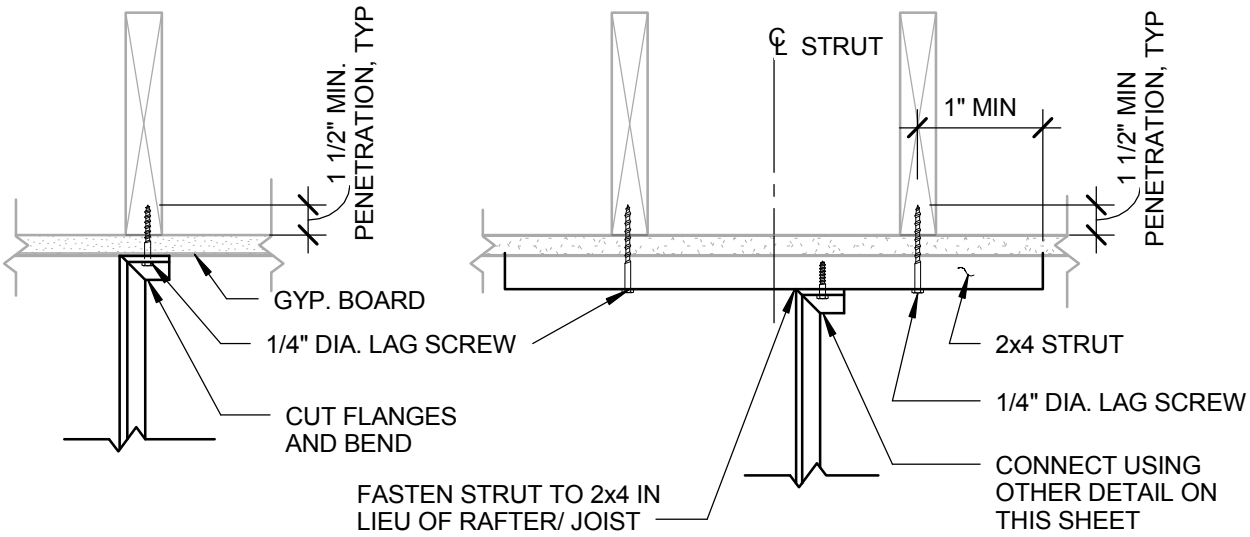

OPTION 1 **OPTION 2**

CHANNEL STRUT

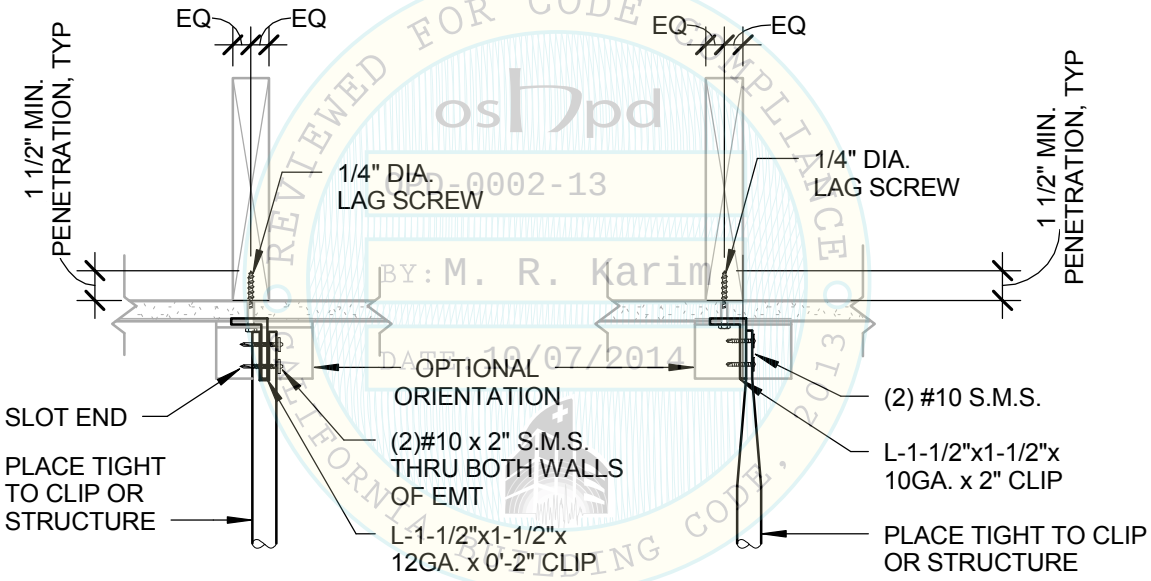

REVIEWED FOR CODE COMPLIANCE
oshpd
OPD-0002-13
BY: M. R. Karim
DATE 10/07/2014
CALIFORNIA BUILDING CODE, 2013

OPTION 1 **OPTION 2**

TUBE STRUT

NOTES:

1. FRAMING MEMBERS MUST BE DESIGNED TO CARRY THE CEILING LOADS, RDP TO VERIFY.
2. RDP SHALL VERIFY THAT SCREWS AT THE BOTTOM FLANGE OF TRUSS IS ACCEPTABLE
3. SEE PAGES CL5.20 & CL5.30 FOR ADDITIONAL INFORMATION

Section Title : OSHPD STANDARD SUSPENDED CEILING DETAILS		OPD No:
Sheet Title : STRUT CONNECTION TO SAWN TIMBER WITH GYPSUM BOARD		CL5.50

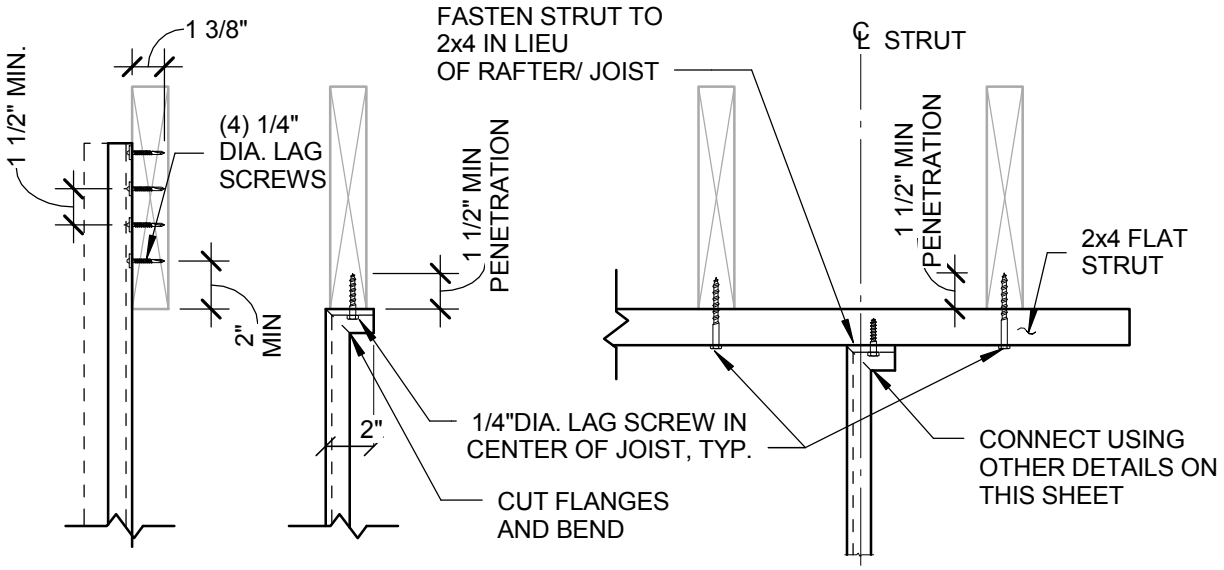

OPTION 1 **OPTION 2** **OPTION 3**

CHANNEL STRUT

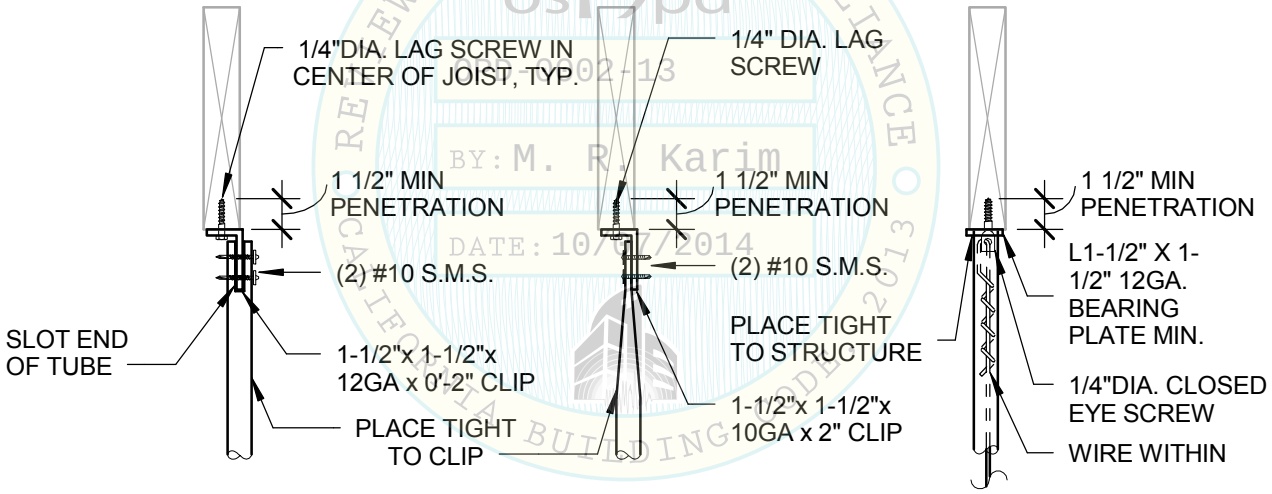

OPTION 1 **OPTION 2** **OPTION 3**

TUBE STRUT

REVIEWED FOR CODE COMPLIANCE
OSHPD
OPD-0002-13
BY: M. R. Karim
DATE: 10/07/2014
CALIFORNIA BUILDING CODE 2013

NOTES:

1. FRAMING MEMBERS MUST BE DESIGNED TO CARRY THE CEILING LOADS, RDP TO VERIFY.
2. RDP SHALL VERIFY THAT SCREWS AT THE BOTTOM FLANGE OF TRUSS IS ACCEPTABLE.
3. SEE PAGES CL5.20, CL5.30 & CL5.50 FOR ADDITIONAL INFORMATION.

Section Title : OSHPD STANDARD SUSPENDED CEILING DETAILS		OPD No:
Sheet Title : STRUT CONNECTION TO SAWN TIMBER WITHOUT GYPSUM BOARD		CL5.60

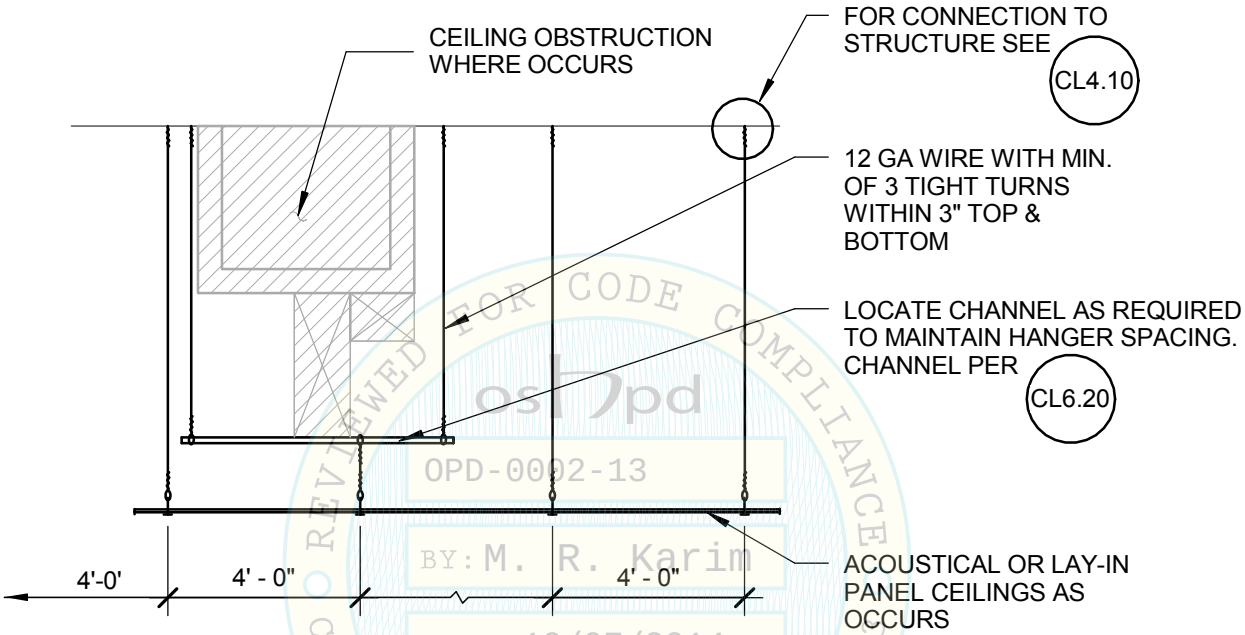

REVIEWED FOR CODE COMPLIANCE
oshpd
OPD-0002-13
BY: M. R. Karim
DATE: 10/07/2014
CALIFORNIA BUILDING CODE, 2013

TRAPEZE SUPPORT

Section Title : OSHPD STANDARD SUSPENDED CEILING DETAILS		OPD No:
Sheet Title : OBSTRUCTION - TRAPEZE CONDITION		CL6.10

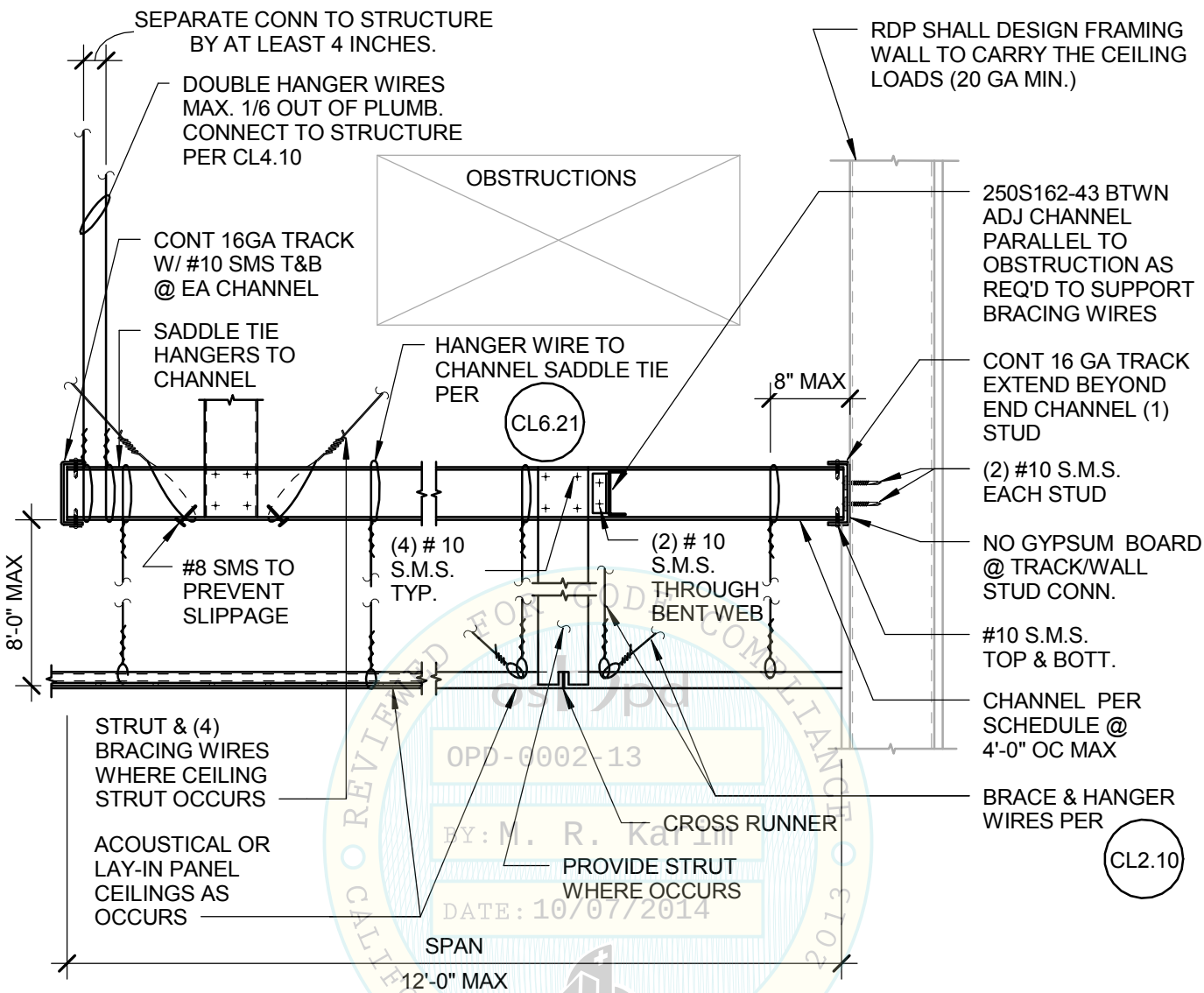

REVIEWED FOR CODE COMPLIANCE
oshpd
OPD-0002-13
BY: M. R. Karim
DATE: 10/07/2014
CALIFORNIA BUILDING CODE, 2013

WALL WHERE OCCURS

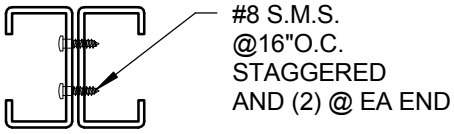

SPAN	SECTION
4'-0"	250S162-43
8'-0"	400S162-54
12'-0"	(2) 400S162-54

DBL. SECTION

Section Title : OSHPD STANDARD SUSPENDED CEILING DETAILS		OPD No:
Sheet Title : OBSTRUCTION-BRIDGE AT LARGE OFFSET CONDITION		CL6.20

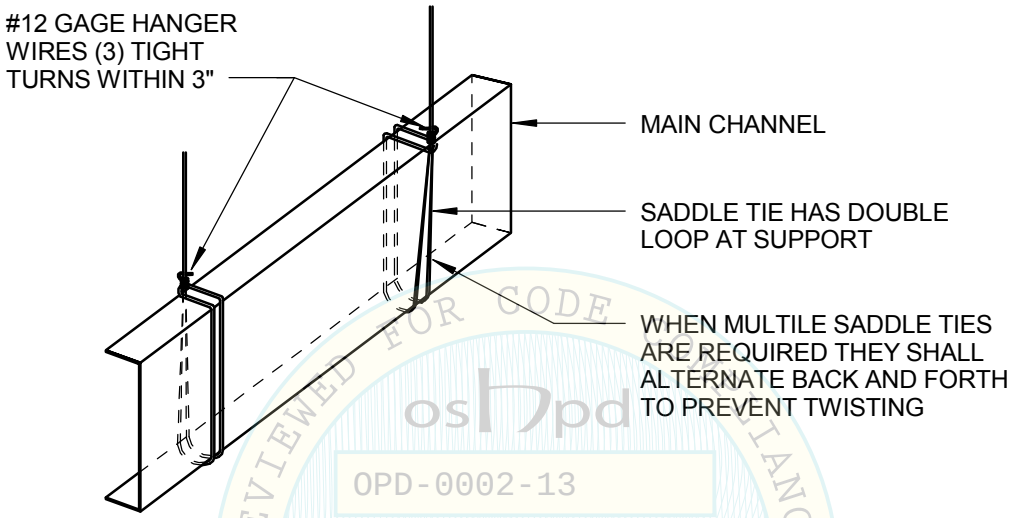

REVIEWED FOR CODE COMPLIANCE
oshpd
OPD-0002-13
BY: M. R. Karim
DATE: 10/07/2014
CALIFORNIA BUILDING CODE, 2013

SADDLE TIE AT MAIN RUNNER TO HANGER WIRE

Section Title : OSHPD STANDARD SUSPENDED CEILING DETAILS		OPD No:
Sheet Title : SADDLE TIE DETAIL		CL6.21

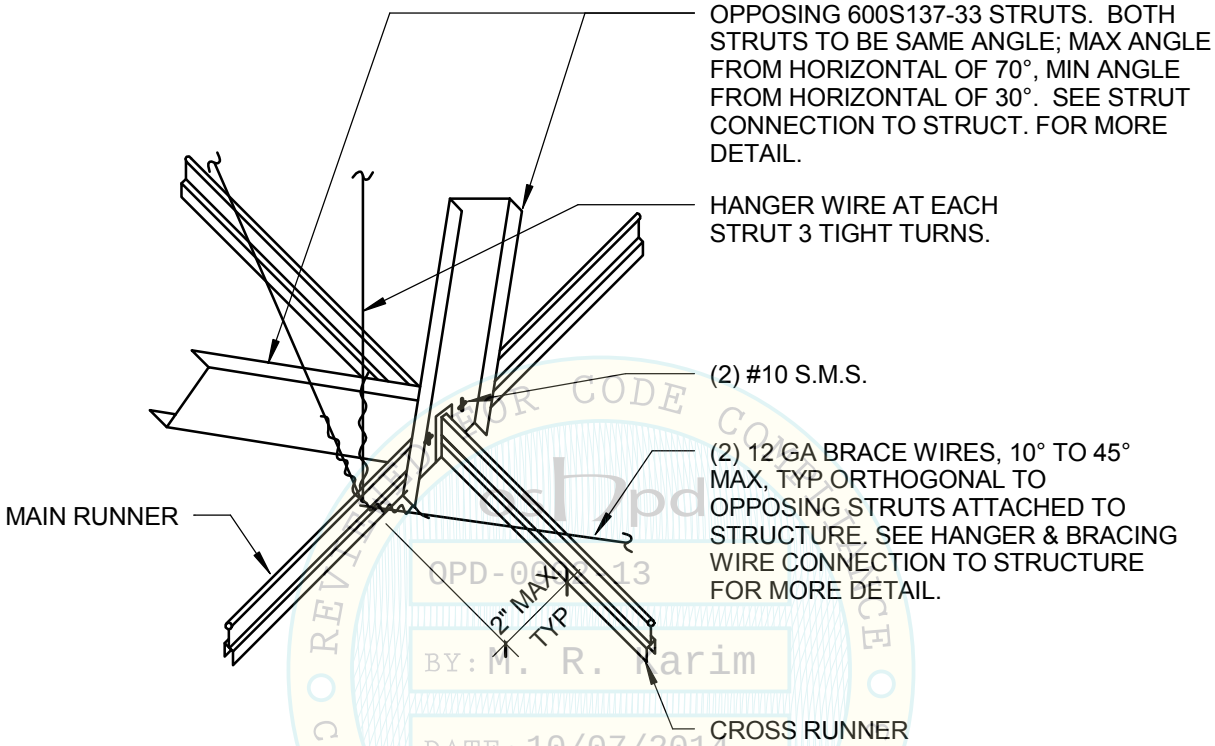

OPD-0002-13
BY: M. R. Karim
DATE: 10/07/2014

OPPOSING STRUT FOR CEILING

Section Title : OSHPD STANDARD SUSPENDED CEILING DETAILS		OPD No:
Sheet Title : OBSTRUCTION-COUNTER SLOPING STRUTS		CL6.30

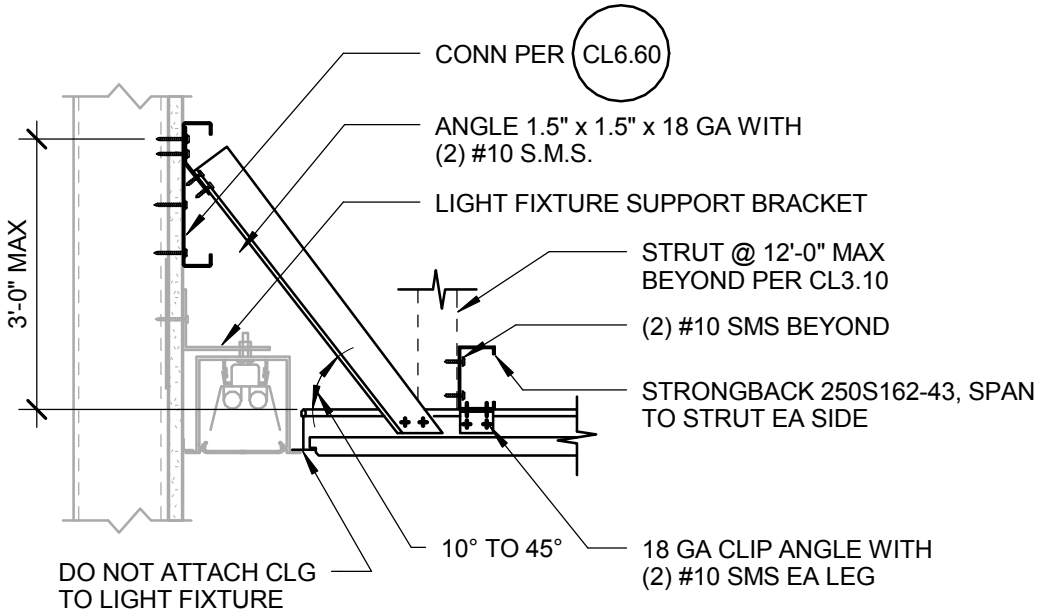

LOCATIONS WITHOUT CROSS JOISTS

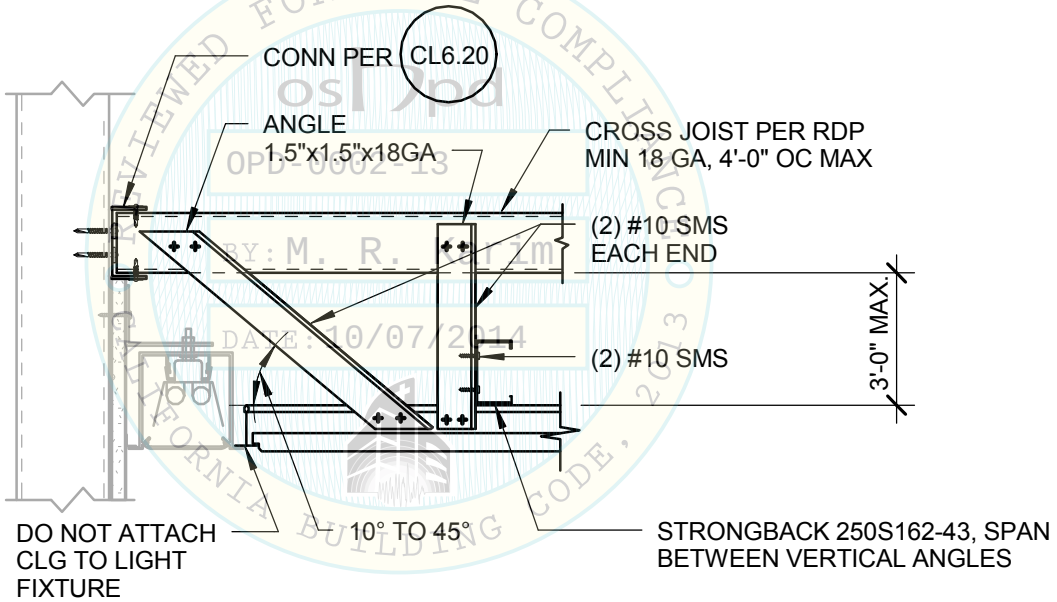

REVIEWED FOR CODE COMPLIANCE
OSHPD
OPD-0002-13
BY: M. R. Karim
DATE: 10/07/2014
CALIFORNIA BUILDING CODE, 2013

LOCATIONS WITH CROSS JOISTS

NOTES:

1. RDP SHALL VERIFY CROSS JOIST, STRONGBACK, STRUT, BRACE, AND SUPPORTING WALL.
2. DETAILS IN THIS PAGE ARE ONLY PERMITTED AT THE ATTACHED END OF THE CEILING AND ARE NOT PERMITTED AT THE FREE JOINT.
3. ALL BRACING AND HANGER WIRES PER CL3.10 REQUIRED.

Section Title : OSHPD STANDARD SUSPENDED CEILING DETAILS		OPD No:
Sheet Title : OBSTRUCTION-RECESSED LIGHT AT PERIMETER		CL6.40

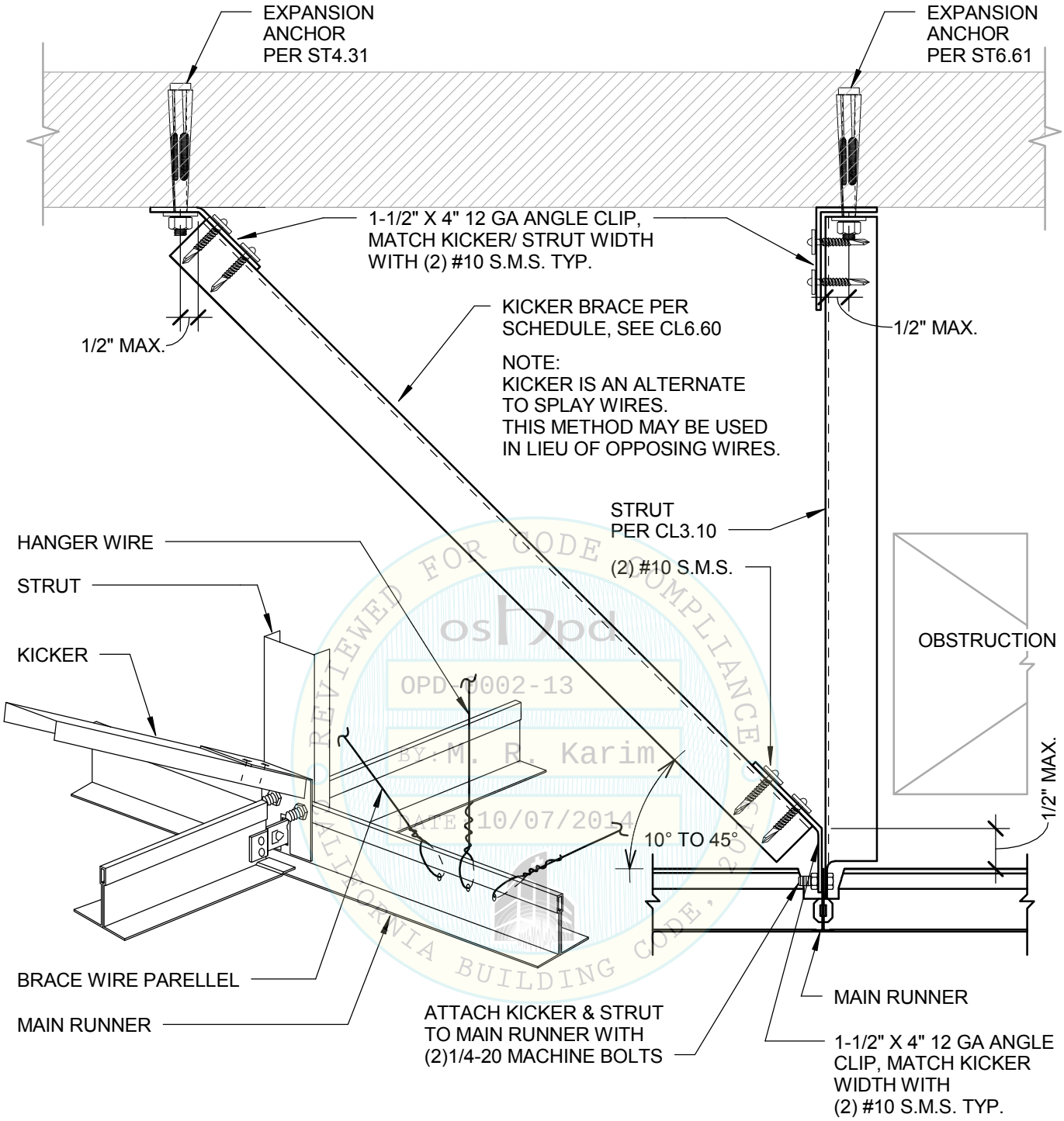

REVIEWED FOR CODE COMPLIANCE
OSHPD
OPD-0002-13
BY: M. R. Karim
DATE: 10/07/2014
CALIFORNIA BUILDING CODE, 2013

ISOMETRIC VIEW **SIDE VIEW**

T-BAR CEILING - WIRE OBSTRUCTION DETAIL W/ STUD KICKER, LESS BRACING WIRES, TO DECK.

Section Title : OSHPD STANDARD SUSPENDED CEILING DETAILS		OPD No:
Sheet Title : OBSTRUCTION-STUD KICKER TO OVERHEAD		CL6.50

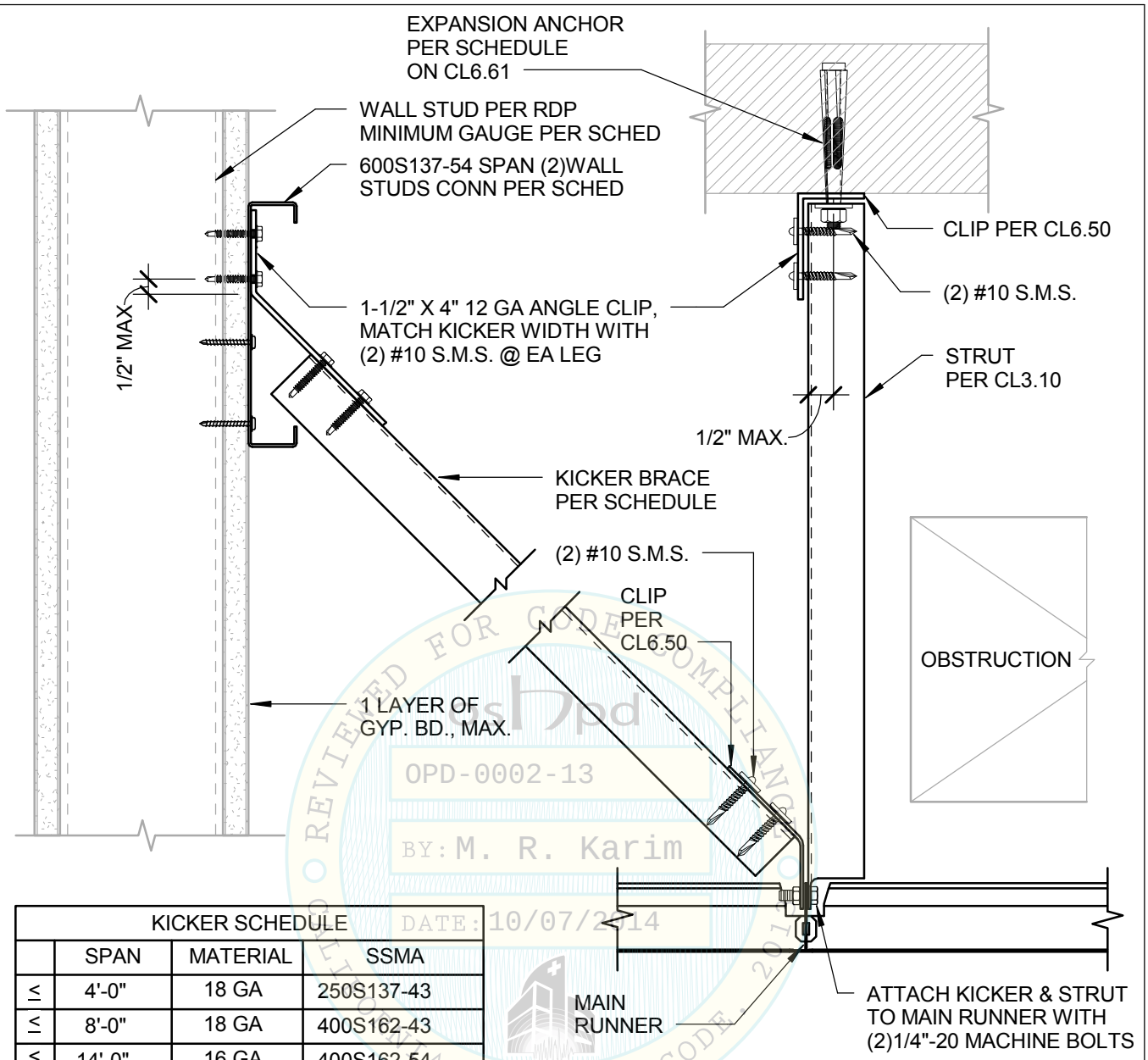

REVIEWED FOR CODE COMPLIANCE
OSHPD
OPD-0002-13
BY: M. R. Karim
DATE: 10/07/2014
CALIFORNIA BUILDING CODE 2013

SIDE VIEW

KICKER SCHEDULE			
	SPAN	MATERIAL	SSMA
≤	4'-0"	18 GA	250S137-43
≤	8'-0"	18 GA	400S162-43
≤	14'-0"	16 GA	400S162-54

WALL STUD GAUGE	CONN TO WALL STUD	CONN TO WALL STUD ALT [3]
20 GA	(5) #10x1-1/4" SMS	(3) #10x1-1/4" SMS
18 GA	(4) #10x1-1/4" SMS	(2) #10x1-1/4" SMS

NOTE:
1. KICKER BRACING IS AN ALTERNATE TO BRACING WIRES. THIS METHOD MAY BE USED IN LIEU OF OPPOSING WIRES AT ATTACHED JOINT ONLY. NOT PERMITTED AT FREE JOINT

2. RDP SHALL DESIGN FRAMED WALLS TO CARRY THE CEILING LOADS
3. APPLIES WHERE CLIP ATTACHED DIRECTLY TO WALL STUD.

T-BAR CEILING - WIRE OBSTRUCTION DETAIL W/ STUD KICKER, LESS BRACING WIRES, TO WALL

Section Title : OSHPD STANDARD SUSPENDED CEILING DETAILS

OPD No:

Sheet Title : OBSTRUCTION-STUD KICKER TO WALL - PAGE 1 OF 2

CL6.60

ANCHOR BOLT SIZE	SPLAY BRACE/COMP POST SPACING	SDS (g) RANGE (z/h = 1.0)	DECK TYPE
5/8 x 4 1/4" EMBED	8' x 8' (PER CL2.20)	$1.73<S_{DS}\leq 2.5$ (PER CL2.20)	W3 + 3 1/4" MIN PER CL1.20
5/8 x 4 1/4" EMBED	8' x 12' (PER CL2.21)	$1.15<S_{DS}\leq 1.73$ (PER CL2.21)	W3 + 3 1/4" MIN PER CL1.20
5/8 x 4 1/4" EMBED	12' x 12' (PER CL2.22)	$0<S_{DS}\leq 1.15$ (PER CL2.22)	W3 + 3 1/4" MIN PER CL1.20
3/8 x 2" EMBED[1]	8' x 8' (PER CL2.20)[1]	$0.90<S_{DS}\leq 1.35$ (IN LIEU OF SHOWN ON CL2.20)[1]	W3 + 3 1/4" MIN PER CL1.20 OR B 1 1/2" + 2 1/4" MIN PER CL1.22
3/8 x 2" EMBED[1]	8' x 12' (PER CL2.21)[1]	$0.60<S_{DS}\leq 0.90$ (IN LIEU OF S_{DS} SHOWN ON CL2.21)[1]	W3 + 3 1/4" MIN PER CL1.20 OR B 1 1/2" + 2 1/4" MIN PER CL1.22
3/8 x 2" EMBED[1]	12' x 12' (PER CL2.22)[1]	$0<S_{DS}\leq 0.60$ (IN LIEU OF S_{DS} SHOWN ON CL2.22)[1]	W3 + 3 1/4" MIN PER CL1.20 OR B 1 1/2" + 2 1/4" MIN PER CL1.22

REVIEWED FOR CODE COMPLIANCE
OSHPD
OPD-0002-13
BY: M. R. Karim
DATE: 10/07/2014
CALIFORNIA BUILDING CODE, 2013

NOTE:

1. RDP CAN USE SMALLER EXPANSION BOLT SIZE AND SHALLOWER EMBEDMENT DEPTH SHOWN, PROVIDED VERTICAL STRUT/BRACING WIRE SPACING IS REDUCED AS SHOWN, IN LIEU OF SPACINGS SHOWN ON CL2.20, CL2.21, AND CL2.22.

Section Title : OSHPD STANDARD SUSPENDED CEILING DETAILS			OPD No:
Sheet Title : OBSTRUCTION-STUD KICKER TO WALL - PAGE 2 OF 2			CL6.61

OSHPD contact for question or comment:

OPD@oshpd.ca.gov